Form No. 3362-970 Rev A

1800 Power Curve® Snowthrower

Model No. 38026—Serial No. 290001001 and Up

Operator's Manual

Introduction

Read this information carefully to learn how to operate and maintain your product properly and to avoid injury and product damage. You are responsible for operating the product properly and safely.

You may contact Toro directly at www.Toro.com for product and accessory information, help finding a dealer, or to register your product.

Whenever you need service, genuine Toro parts, or additional information, contact an Authorized Service Dealer or Toro Customer Service and have the model and serial numbers of your product ready. Figure 1 identifies the location of the model and serial numbers on the product. Write the numbers in the space provided.

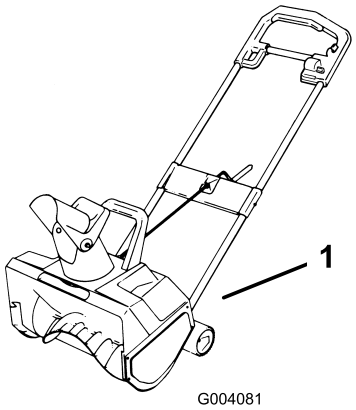

Figure 1

1. Model and serial number location

Model No. _____

Serial No. _____

This manual identifies potential hazards and has safety messages identified by the safety alert symbol (Figure 2), which signals a hazard that may cause serious injury or death if you do not follow the recommended precautions.



Figure 2

1. Safety alert symbol

This manual uses 2 words to highlight information. **Important** calls attention to special mechanical information and **Note** emphasizes general information worthy of special attention.

Safety

This snowthrower meets or exceeds the ISO standard 8437 in effect at the time of production.

Read and understand the contents of this manual before the engine is ever started.

⚠This is the safety alert symbol. It is used to alert you to potential personal injury hazards. Obey all safety messages that follow this symbol to avoid possible injury or death.

Improperly using or maintaining this snowthrower could result in injury or death. To reduce this potential, comply with the following safety instructions.

The following instructions have been adapted from the ANSI/OPEI standard B71.3-1995, the ISO 8437:1989 standard, and European Standard EN 786:1996 and EN 60335-2-91:2002.

Training

- Read the operator's manual carefully. Be thoroughly familiar with the controls and the proper use of the equipment. Know how to stop the unit and disengage the controls quickly.
- Never allow children to operate the snowthrower. Never allow adults to operate the snowthrower without proper instruction.
- Keep the area of operation clear of all persons (particularly small children) and pets.
- Exercise caution to avoid slipping or falling.

© 2009—The Toro® Company
8111 Lyndale Avenue South
Bloomington, MN 55420

Register at www.Toro.com.

CE

Original Instructions (EN)
Printed in the USA
All Rights Reserved

Preparation

- Thoroughly inspect the area where you will use the snowthrower. Remove all doormats, sleds, boards, wires, and other foreign objects.
- Release the control bar to disengage the rotor blades before starting the engine.
- Do not operate the snowthrower without wearing adequate winter garments. Wear footwear that will improve your footing on slippery surfaces.
- Never attempt to make any adjustments while the motor is running, except where specifically recommended by Toro.
- Let the motor and the snowthrower adjust to the outdoor temperature before starting to clear snow.
- Operating any powered machine can result in foreign objects being thrown into the eyes. Always wear safety glasses or eye shields while operating, adjusting, or repairing the snowthrower.
- Always ensure that the ventilation openings are kept clear of debris.
- Before use, check the supply and extension cord for signs of damage or aging.

Operation

- Do not put hands or feet near or under rotating parts. Keep clear of the discharge opening at all times.
- Disconnect the machine from the power source before checking, cleaning, or working on the machine and when it is not in use.
- If the cord becomes damaged during use, disconnect the cord from the power supply immediately. Do not touch the cord before disconnecting the power supply.
- Do not use the machine if the cord is damaged or worn.
- Keep extension cords away from the rotor blades.
- The power supply used with the appliance should be a residential current device (RCD) with a tripping current of not more than 30 mA.
- Exercise extreme caution when crossing gravel drives, walks, or roads. Stay alert for hidden hazards or traffic.
- Do not attempt to clear snow from a crushed-rock or gravel surface. This product is intended for use only on paved surfaces.
- After striking a foreign object, stop the motor, thoroughly inspect the snowthrower for any damage, and repair the damage before operating the snowthrower.
- If the unit should start to vibrate abnormally, stop the motor and check immediately for the cause. Vibration is generally a warning of trouble.
- Stop the motor whenever you leave the operating position, before unclogging the discharge chute, and when making any repairs, adjustments, or inspections.
- When cleaning, repairing, or inspecting, make certain that the rotor blades and all moving parts have stopped.
- Do not clear snow across the face of slopes. Exercise extreme caution when changing direction on slopes. Do not attempt to clear steep slopes.
- Never operate the snowthrower without proper guards, plates, or other safety protective devices in place.
- Never operate the snowthrower near glass enclosures, automobiles, window wells, and drop-offs without properly adjusting the snow discharge angle. Keep children and pets away.
- Do not overload the machine capacity by attempting to clear snow at too fast a rate.
- Look behind and use care when backing up with the snowthrower.
- Never direct the discharge at bystanders or allow anyone in front of the unit.
- Never operate the snowthrower without good visibility or light. Always be sure of your footing, and keep a firm hold on the handle. Walk; never run.

Maintenance and Storage

- Check all fasteners at frequent intervals for proper tightness to be sure that the equipment is in safe working condition.
- Always refer to this operator's manual for important details if the snowthrower is to be stored for an extended period.
- Maintain or replace safety and instruction labels when necessary.

Toro Snowthrower Safety

The following list contains safety information specific to Toro products or other safety information that you must know.

- Rotating rotor blades can injure fingers or hands. Stay behind the handles and away from the discharge opening while operating the snowthrower. Keep your face, hands, feet, and any other part of your body or clothing away from moving or rotating parts.

- Before adjusting, cleaning, repairing, and inspecting the snowthrower, and before unclogging the discharge chute, stop the motor and wait for all moving parts to stop.
- Use a stick, not your hands, to remove obstructions from the discharge chute.
- Before leaving the operating position, stop the motor and wait for all moving parts to stop.
- Do not wear loose-fitting clothing that could get caught in moving parts.
- If a shield, safety device, or decal is damaged, illegible, or lost, repair or replace it before beginning operation. Also, tighten any loose fasteners.
- Do not use the snowthrower on a roof.
- Perform only those maintenance instructions described in this manual. Before performing any maintenance, service, or adjustment, stop the motor and disconnect the power cord from the power source. If major repairs are ever needed, contact your Authorized Service Dealer.
- Purchase only genuine Toro replacement parts and accessories.

Sound Pressure

This unit has a maximum sound pressure level at the operator's ear of 89 dBA, based on measurements of identical machines per EN 11201.

Sound Power

This unit has a guaranteed sound power level of 104 dBA, based on measurements of identical machines per EN 3744.

Vibration

This unit does not exceed a hand/arm vibration level of 2.3 m/s^2, based on measurements of identical machines per EN 1033.

Safety and Instructional Decals

Important: **Safety and instruction decals are located near areas of potential danger. Replace damaged decals.**



107-3040

1. Cutting dismemberment, impeller and cutting dismemberment, auger hazards—keep bystanders a safe distance from the snowthrower.



107-3324

1. Thrown object hazard; cutting/dismemberment hazard, impeller and auger—read the *Operator's Manual,* keep bystanders a safe distance from the machine.
2. Electric shock hazard—disconnect the machine from the power outlet and read the instructions before servicing or performing maintenance.
3. Contains recyclable materials, do not discard.

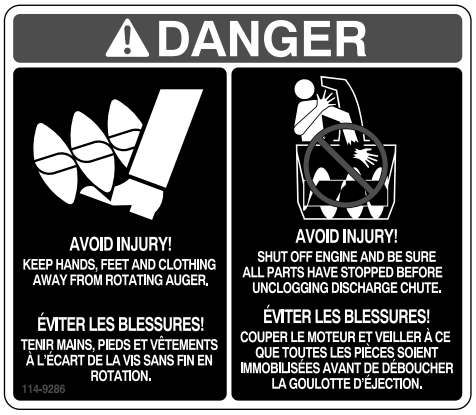

114-9286

Setup

Loose Parts

Use the chart below to verify that all parts have been shipped.

Procedure	Description	Qty.	Use
1.	Mounting plate Chute crank Machine screw Locknut	1 1 2 2	Install the upper handle and chute crank.
2.	Chute deflector Rubber washer Carriage bolt Metal washer Locknut	1 2 2 2 2	Install the discharge chute.

Note: Determine the left and right sides of the machine from the normal operating position.

1. Installing the Upper Handle and Chute Crank

1	Mounting plate
1	Chute crank
2	Machine screw
2	Locknut

Procedure

1. Stand the snowthrower on its wheels and position the upper handle.
2. Inspect the open internal wiring; if it is damaged, do not assemble. Contact an Authorized Service Dealer.

The internal wiring could be damaged during assembly, causing serious personal injury when operating the snowthrower.

- **Carefully assemble the snowthrower so that you will not damage the electrical wiring.**
- **If the wiring is damaged, do not assemble the snowthrower. Contact an Authorized Service Dealer.**

3. Carefully insert the right side of the upper tubing over the end of the lower right side tubing (Figure 3).

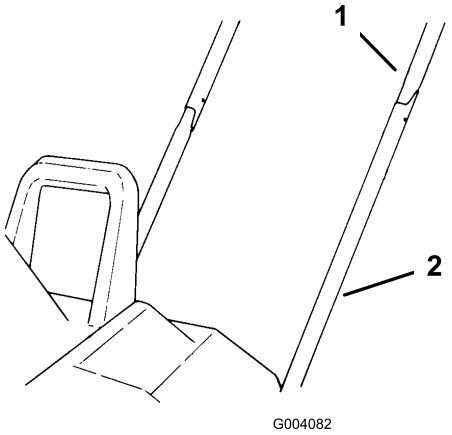

Figure 3

1. Upper tubing
2. Lower tubing

4. Carefully insert the left side of the upper tubing into the end of the lower left side tubing (Figure 3).
5. Squeeze the upper tubes together, and wiggle the upper tubes down until the mounting holes in the upper and lower tubing line up (Figure 3).
6. Place the mounting plate over the tubes (Figure 4).

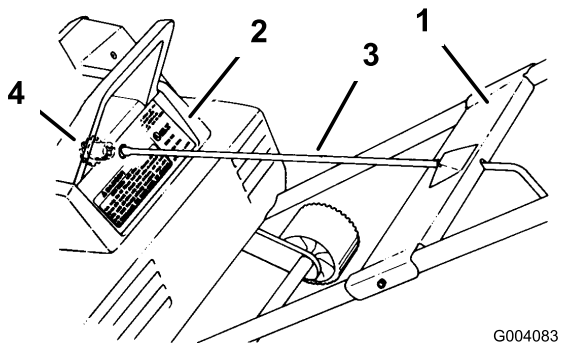

Figure 4

1. Mounting plate
2. Shroud
3. Chute crank
4. Gear

7. Align the mounting plate holes with the upper and lower tubing holes.
8. Insert the end of the chute crank through the hole in the shroud.
9. Turn the chute crank rod slowly until the flattened end drops into the slot in the gear, then firmly push the chute crank into the gear until it snaps into place (Figure 4 and Figure 5).

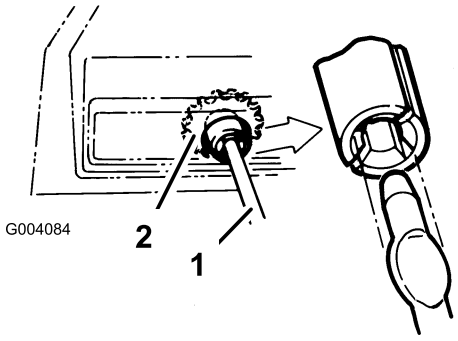

Figure 5

1. Chute crank
2. Chute crank gear

10. Secure the upper and lower tubing and the mounting plate together with 2 machine screws and 2 locknuts.

    Note: Position the screw heads on the outside of the mounting plate. Be careful not to damage the internal electrical wiring when you insert the screws. If the wiring blocks the hole, use a blunt 1/8 inch punch to carefully route the electrical wiring away from the aligned holes.

2. Installing the Discharge Chute

1	Chute deflector
2	Rubber washer
2	Carriage bolt
2	Metal washer
2	Locknut

Procedure

1. Position the chute deflector onto the discharge chute and align the mounting holes (Figure 6).

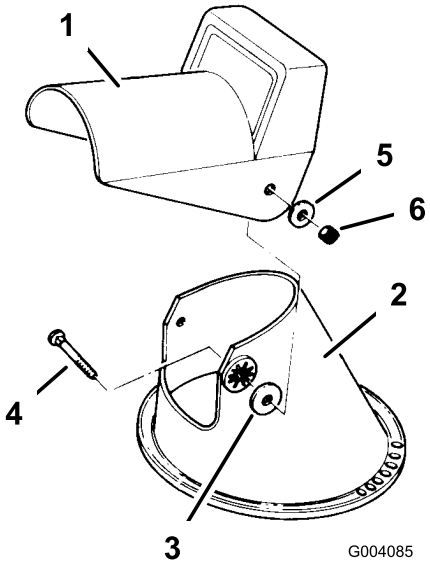

Figure 6

1. Chute deflector
2. Discharge chute
3. Rubber washer (2)
4. Carriage bolt (2)
5. Metal washer (2)
6. Locknut (2)

2. Insert a rubber washer between the chute deflector and the discharge chute on each side while maintaining the hole alignment (Figure 6).
3. Secure the deflector to the discharge chute with 2 carriage bolts, 2 metal washers, and 2 locknuts.

    Note: Ensure that the square shoulders on the carriage bolts align with the inside square on the discharge chute. Position the metal washers to the outside of the chute deflector as shown in Figure 6. Do not overtighten the bolts.

Product Overview

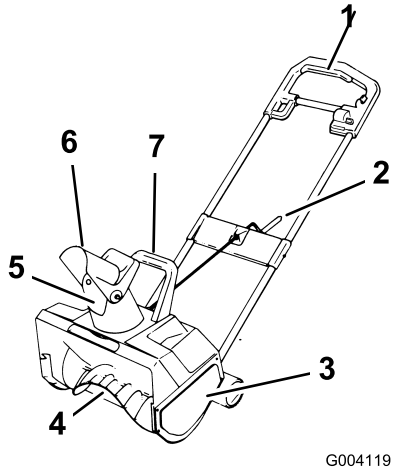

Figure 7

1. Control bar
2. Chute crank
3. Belt cover
4. Rotor
5. Discharge chute
6. Chute deflector
7. Secondary handle

Operation

Before Starting

For safe and efficient use of your appliance, use only an extension cord recommended for outdoor use. Use only a 2.5 mm extension cord up to 25 m long.

Contact with water while operating the snowthrower can cause electric shock, resulting in personal injury or death.

Don't handle the plug or the appliance with wet hands or while standing in water.

Note: To prevent the extension cord from disconnecting during operation, tie it to the loop in the upper handle before you connect it to the snowthrower (Figure 8).

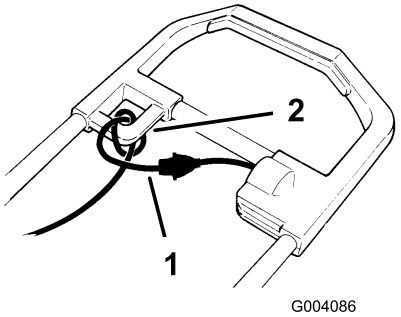

Figure 8

1. Extension cord
2. Loop

The electrical cord can get damaged, causing a shock or fire.

Thoroughly inspect the electrical cord before using the snowthrower. If the cord is damaged, do not operate the snowthrower. Repair or replace the damaged cord immediately. Contact an Authorized Service Dealer for assistance.

Starting and Stopping

1. To start the rotor, squeeze the control bar (Figure 9).

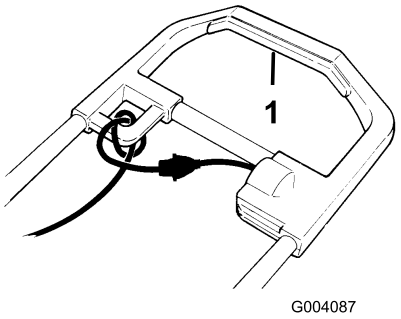

Figure 9

1. Control bar

2. To stop the rotor, release the control bar.

Operating Tips

If snowthrower hits an object while in operation, the object could be thrown in operator's or bystander's direction. Thrown objects could cause serious personal injury.

Keep the area to be cleared free of all objects which may be picked up and thrown by the rotor blades.

- Check the condition of the snowthrower before operating it to ensure that the rotor turns freely.
- Always keep children and pets away from the area of operation.
- Keep the area to be cleared free of stones, toys, or other objects which the rotor blades can throw. Such items could be covered by snowfall and go unnoticed. If the snowthrower strikes an object during operation, stop the snowthrower, unplug the extension cord, remove the obstruction, and check the snowthrower for damage.
- To adjust the discharge chute, rotate the chute crank clockwise to move the discharge chute to the left; counterclockwise to move it to the right.

  Note: The chute crank makes a noise as you turn the crank. This is normal.
- To adjust the height of the snow stream, raise or lower the chute deflector handle (Figure 10).

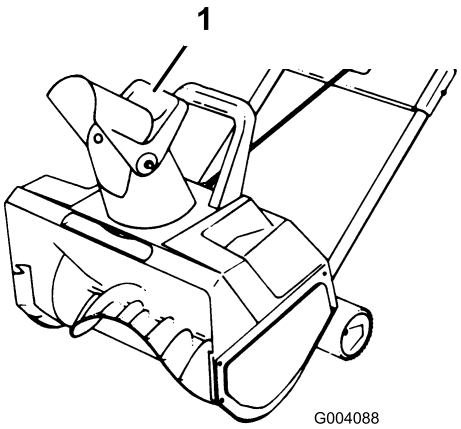

Figure 10

1. Chute deflector handle

A gap between the discharge chute and the chute deflector may allow the snowthrower to throw snow and objects in the direction of the operator. Thrown objects could cause serious personal injury.

- **Do not force the chute deflector too far forward so that a gap appears between the discharge chute and chute deflector.**
- **Do not overtighten the locknuts that hold the chute deflector in place.**

- Begin removing snow near the electrical outlet and work outward. Blow back and forth, not away from and toward the outlet.
- When turning at the end of a swath, step over the cord and turn the snowthrower.
- Always overlap each swath and discharge the snow downwind when possible.
- To shave down large banks of snow, lift the snowthrower by the primary and secondary handles (Figure 11) and place the snowthrower on the bank. Let the weight of the snowthrower shave down the bank in a back-and-forth motion.

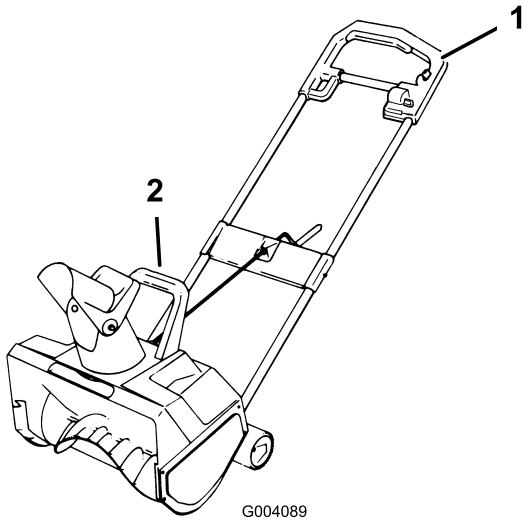

Figure 11

1. Primary handle
2. Secondary handle

- When clearing steps, hold the snowthrower by the primary and secondary handles and use a swinging or sweeping motion.

When using the secondary handle, never direct the snow discharge chute at the operator or bystanders. The snowthrower can throw objects and cause serious personal injury.

When using the secondary handle, always turn the discharge chute in the opposite direction from where you or bystanders are standing.

- Keep the extension cord clear of obstructions, sharp objects, and all moving parts. Do not pull sharply on cord or abuse it in any manner. Frequently inspect the extension cord for damage that may result in an electric shock. If the extension cord becomes damaged, replace it.
- In cold and snowy weather conditions, some controls and moving parts may freeze. Therefore, when any control becomes difficult to operate, stop the motor, disconnect the extension cord, and check for frozen parts. Do not use excessive force when trying to operate frozen controls. Free all the controls and moving parts before operating.
- When operating the snowthrower, keep the wheels 1 inch (2.5 cm) off the pavement by tipping the snowthrower forward. This helps prevent the snow from building up on the wheels.
- After clearing the snow, let the motor run for a few minutes so that moving parts don't freeze. Then shut off the motor, wait for all moving parts to stop, and wipe the ice and snow off the snowthrower. Rotate the chute crank several times to remove the snow.

Maintenance

Important: All electrical repairs should be performed only by an Authorized Service Dealer.

Note: Determine the left and right sides of the machine from the normal operating position.

If the extension cord is plugged into the snowthrower, someone could accidentally operate snowthrower while you are performing maintenance on it, causing serious personal injury.

Disconnect the extension cord before you perform any maintenance.

Lubricating the Snowthrower

You do not need to lubricate the snowthrower; all the bearings were lubricated at the factory for the life of the snowthrower.

Replacing the Scraper

The scraper is located at the bottom of the rotor housing as shown in Figure 12.

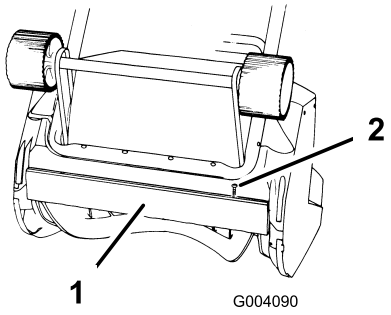

Figure 12

1. Scraper
2. Screw (2)

1. Remove the 2 screws that secure the scraper to the snowthrower (Figure 12).
2. Install the new scraper and fasten it securely with 2 screws.

Replacing the Rotor

1. Remove the 3 screws that secure the right side cover and the skid to the snowthrower frame (Figure 13).

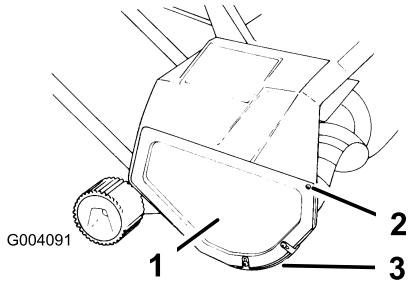

Figure 13

1. Right side cover
2. Screw
3. Skid

2. Use a 5/16 inch Allen wrench to turn the rotor shaft clockwise (left-hand thread) while holding the rotor (Figure 14).

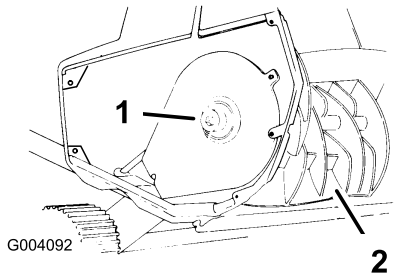

Figure 14

1. Rotor shaft
2. Rotor

Note: You may need to tap the Allen wrench with a hammer to loosen the rotor shaft. Wedge a stick or a hammer handle in the rotor to prevent it from rotating.

Note: If you cannot remove the rotor shaft by holding the rotor, remove the left side cover and the skid (Figure 15).

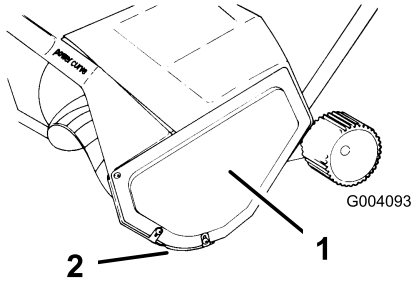

Figure 15

1. Left side cover
2. Skid

3. Hold the hex nut with a 7/8 inch wrench while unscrewing the rotor shaft (Figure 16).

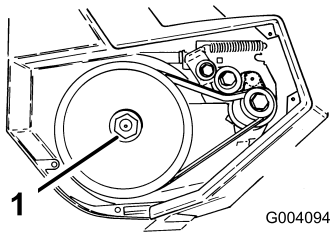

Figure 16

1. Hex nut

4. Hold the rotor and pull out the rotor shaft.
5. Remove the rotor.
6. Align the left side of the new rotor with the coupler.

Note: The 3 bosses on the rotor end must align with the slots on the coupler (Figure 17).

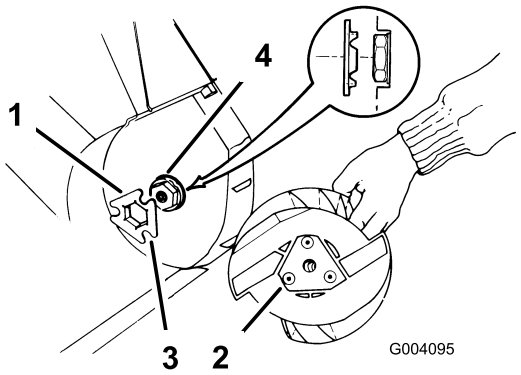

Figure 17

1. Coupler
2. Boss
3. Slot
4. Drive hex

Note: When mounting the coupler to the drive hex, align the coupler tabs to the inside.

7. Slide the right side of the rotor into the mounting position.
8. Insert the rotor shaft through the rotor and ensure that the shaft fits into the bearing on the right side.
9. Torque it to at least 10 ft-lb (14 N·m).
10. Install the cover and the skid.

Replacing the Large Belt

1. Remove the 3 screws that secure the left side plate to the snowthrower frame (Figure 15).
2. Remove the side plate and the skid.

The idler spring could fly in your face while you remove it, causing personal injury.

Wear safety goggles when working with the idler spring.

3. Remove the idler spring from the idler arm (Figure 18).

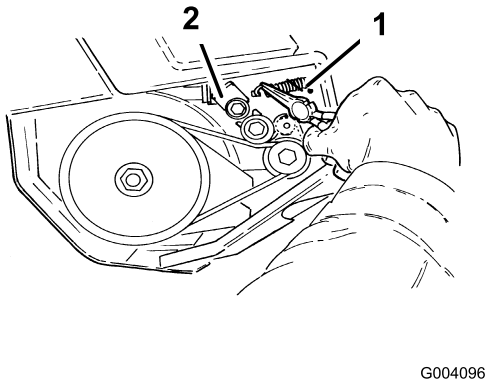

Figure 18

1. Idler spring
2. Idler arm

4. Rotate the rotor with your left hand while sliding the belt off the large pulley with your right hand (Figure 19).

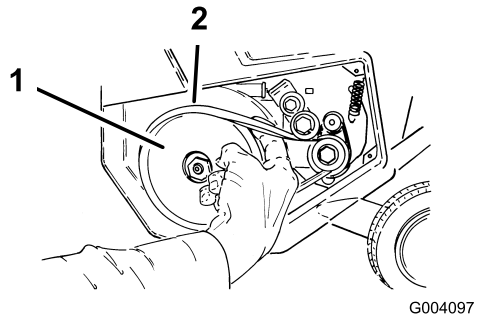

Figure 19

1. Large pulley
2. Belt

5. Slip the new belt over the small pulley (Figure 20).

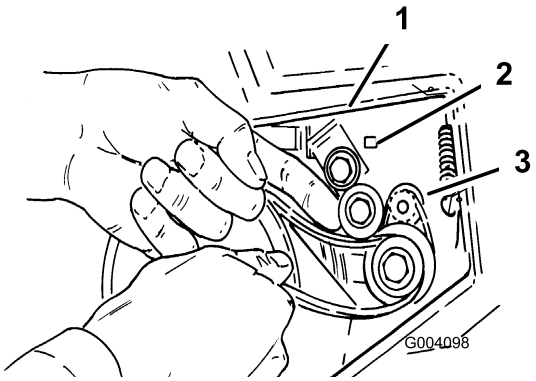

Figure 20

1. Idler arm
2. Idler pulley
3. Small pulley

6. Lift up the idler arm and slip the belt under the idler pulley (Figure 20).
7. Rotate the rotor with your left hand while sliding the belt onto the large pulley with your right hand (Figure 21).

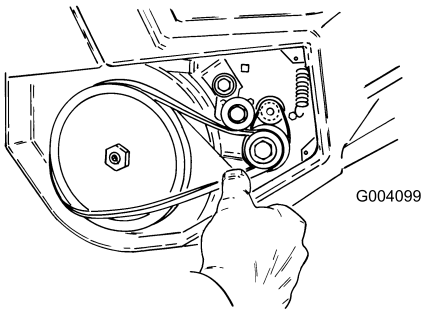

Figure 21

8. Assemble the idler spring (Figure 18), ensuring that the idler pulley rides on the belt.
9. Install the left side cover and the skid with the 3 screws.

Replacing the Small Belt

1. Remove the screws that secure the left side plate and the skid to the snowthrower frame (Figure 15).
2. Remove the side plate and the skid.
3. Remove the large belt by slowly sliding it off the small pulley (Fig. Figure 19).

   Note: Refer to steps 2 and 3 of Replacing the Large Belt.
4. Remove the small pulley bolt (left hand thread) by turning the bolt clockwise.
5. Remove the 2 washers and the small pulley (Figure 22).

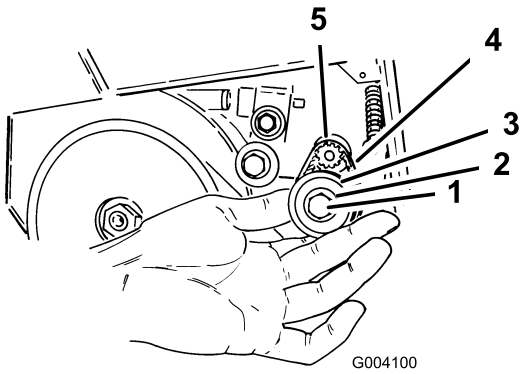

Figure 22

1. Bolt (left-hand thread)
2. Washers
3. Small pulley
4. Small belt
5. Motor shaft pulley

6. Remove and discard the small belt (Figure 22).
7. Slide 2 washers onto the bolt and insert the bolt through the small pulley.

   Note: The bolt must ride on the bearings in the small pulley.
8. Place the new belt on the small pulley.
9. Slide the belt over the motor shaft pulley (Figure 22).
10. Torque the bolt to 25 to 30 in-lb (2.8 to 3.4 N·m). Do not overtighten the bolt.

    Note: The bolt, the bolt head, and the washers must be flush against the small pulley.
11. Slip the large belt over the small pulley (Figure 22). Refer to Replacing the Large Belt.

Storage

1. Run the snowthrower for a few minutes to melt away any snow on the snowthrower.
2. Disconnect the extension cord from the snowthrower.
3. Examine the extension cord thoroughly for signs of wear or damage. Replace it if it is worn or damaged.
4. Examine the snowthrower thoroughly for worn, loose, or damaged parts. To repair or replace parts, contact an local Authorized Service Dealer for assistance.
5. Store the extension cord with the snowthrower.
6. Store the snowthrower in a clean, dry place.

Notes:

Notes:

International Distributor List

Distributor:	Country:	Phone Number:
Atlantis Su ve Sulama Sisstemleri Lt	Turkey	90 216 344 86 74
Balama Prima Engineering Equip	Hong Kong	852 2155 2163
B-Ray Corporation	Korea	82 32 551 2076
Casco Sales Company	Puerto Rico	787 788 8383
Ceres S.A	Costa Rica	506 239 1138
CSSC Turf Equipment (pvt) Ltd	Sri Lanka	94 11 2746100
Cyril Johnston & Co	Northern Ireland	44 2890 813 121
Equiver	Mexico	52 55 539 95444
Femco S.A.	Guatemala	502 442 3277
G.Y.K. Company ltd.	Japan	81 726 325 861
Geomechaniki of Athens	Greece	30 10 935 0054
Guandong Golden Star	China	86 20 876 51338
Hako Ground and Garden	Sweden	46 35 10 0000
Hako Ground and Garden	Norway	47 22 90 7760
Hayter Limited (U.K.)	United Kingdom	44 1279 723 444
Hydroturf Int. Co Dubai	United Arab Emirates	97 14 347 9479
Hydroturf Egypt LLC	Egypt	202 519 4308
Ibea S.p.A.	Italy	39 0331 853611
Irriamc	Portugal	351 21 238 8260
Irrigation Products Int'l Pvt Ltd	India	86 22 83960789
Jean Heybroek b.v.	Netherlands	31 30 639 4611
Lely (U.K.) Limited	United Kingdom	44 1480 226 800
Maquiver S.A.	Colombia	57 1 236 4079
Maruyama Mfg. Co. Inc.	Japan	81 3 3252 2285
Metra Kft	Hungary	36 1 326 3880
Mountfield a.s.	Czech Republic	420 255 704 220
Munditol S.A.	Argentina	54 11 4 821 9999
Oslinger Turf Equipment SA	Ecuador	593 4 239 6970
Oy Hako Ground and Garden Ab	Finland	358 987 00733
Parkland Products Ltd	New Zealand	64 3 34 93760
Prochaska & Cie	Austria	43 1 278 5100
RT Cohen 2004 Ltd	Israel	972 986 17979
Riversa	Spain	34 9 52 83 7500
Roth Motorgerate GmBh & Co	Germany	49 7144 2050
Sc Svend Carlsen A/S	Denmark	45 66 109 200
Solvert S.A.S	France	33 1 30 81 77 00
Spypros Stavrinides Limited	Cyprus	357 22 434131
Surge Systems India Limited	India	91 1 292299901
T-Markt Logistics Ltd	Hungary	36 26 525 500
Toro Australia	Australia	61 3 9580 7355
Toro Europe BVBA	Belgium	32 14 562 960

The Toro Warranty

Conditions and Products Covered

The Toro® Company and its affiliate, Toro Warranty Company, pursuant to an agreement between them, jointly promises to the original purchaser* to repair any Toro Product used for normal residential purposes* if defective in materials or workmanship. The following time periods apply from the date of original purchase:

Products	Warranty Period
Walk Power Mowers	2-year limited warranty
Rear Engine Riders	2-year limited warranty
Lawn & Garden Tractors	2-year limited warranty
Electric Hand Held Products	2-year limited warranty
Snowthrowers	2-year limited warranty
Consumer Zero Turn	2-year limited warranty

* "Original purchaser" means use the person who originally purchased Toro products.

* "Normal residential purposes" means use of the product on the same lot as your home. Use at more than one location is considered commercial use, and the commercial use warranty would apply.

Limited Warranty for Commercial Use

Toro Consumer Products and attachments used for commercial, institutional, or rental use are warranted against defects in materials or workmanship for the following time periods from the date of original purchase:

Products	Warranty Period
Walk Power Mowers	90 day warranty
Rear Engine Riders	90 day warranty
Lawn & Garden Tractors	90 day warranty
Electric Hand Held Products	90 day warranty
Snowthrowers	90 day warranty
Consumer Zero Turn	45 day warranty

Instructions for Obtaining Warranty Service

If you think that your Toro Product contains a defect in materials or workmanship, follow this procedure:

1. Contact your seller to arrange service of the product. If for any reason it is impossible for you to contact your seller, you may contact any Toro Authorized Distributor to arrange service.
2. Bring the product and your proof of purchase (sales receipt) to your seller or the Service Dealer.

If for any reason you are dissatisfied with the Service Dealer's analysis or with the assistance provided, contact the Toro importer or contact us at:

Customer Care Department, Consumer Division
Toro Warranty Company
8111 Lyndale Avenue South
Bloomington, MN 55420-1196
Manager: Technical Product Support: 001-952-887-8248

See attached Distributor List

Owner Responsibilities

You must maintain your Toro Product by following the maintenance procedures described in the operator's manual. Such routine maintenance, whether performed by a dealer or by you, is at your expense.

Items and Conditions Not Covered

This express warranty does not cover:

- Cost of regular maintenance service or parts, such as filters, fuel, lubricants, tune-up parts, blade sharpening, brake and clutch adjustments.
- Any product or part which has been altered or misused or required replacement or repair due to normal wear, accidents, or lack of proper maintenance.
- Repairs necessary due to improper fuel, contaminants in the fuel system, or failure to properly prepare the fuel system prior to any period of non-use over three months.
- Engine and transmission. These are covered by the appropriate manufacturer's guarantees with separate terms and conditions.

All repairs covered by this warranty must be performed by an Authorized Toro Service Dealer using Toro approved replacement parts.

General Conditions

The purchaser is covered by the national laws of each country. The rights to which the purchaser is entitled with the support of these laws are not restricted by this warranty.