FORM NO. 3317–152 Rev. A

TORO®

MODEL NO. 20441–5900001 & UP
MODEL NO. 20443–5900001 & UP

PARTS CATALOG

21" RECYCLER®
Mower

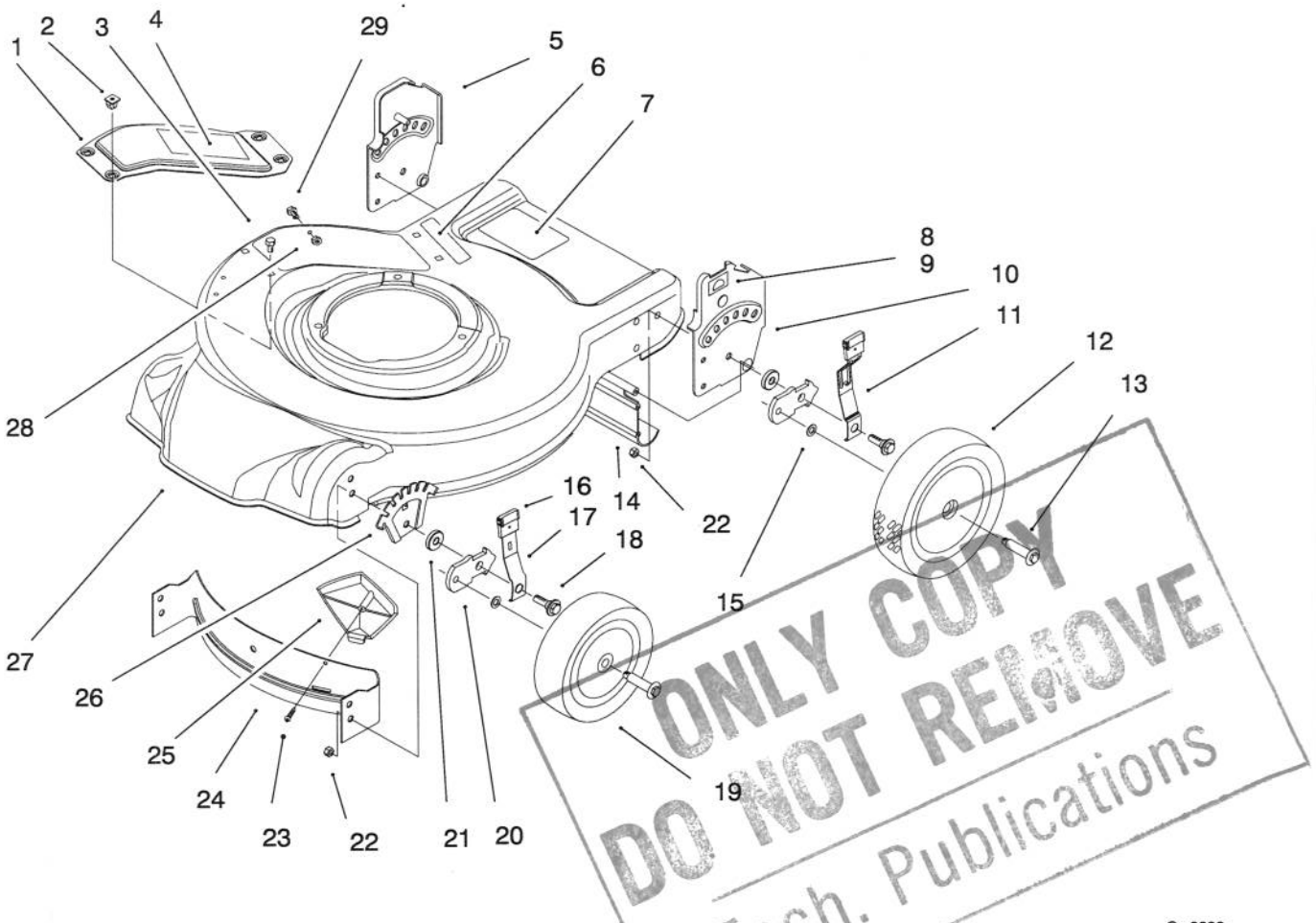

ONLY COPY
DO NOT REMOVE
Tech. Publications

C–2288

HOUSING ASSEMBLY

Ref. No.	Part No.	Description	No. Used
1	16–9269	Cover – Recycling (Incl. Ref. #4)	1
2	93–0242	Grommet	4
3	32144–4	Screw – Tapping	4
4	85–7060	Decal – Danger	1
5	93–0236	Bracket – Handle R.H.	1
6	93–0262	Decal – Warning	1
7	93–0248	Decal – Warning	1
8	92–2915	Decal – HOC L.H.	1
9	92–2914	Decal – HOC R.H.	1
10	93–0235	Bracket – Handle L.H.	1
11	92–1005	Spring Arm Assembly	2
12	92–9592	Wheel Assembly	2
13	614650	Bolt – Shoulder	4
14	92–8647	Shield – Trailing	1
15	40–1940	Washer	4
16	92–1008	Knob – Height Adjust	4
17	614687	Spring Arm Assembly	2
18	614672	Bolt – Shoulder	4
19	92–9591	Wheel Assembly	2
20	614637	Bracket – Wheel Height Adj.	4
21	92–4890	Washer	4
22	3296–39	Nut – Lock	4
23	93–0231	Screw – Plastite	2
24	93–0222	Baffle – Front	1
25	93–0216	Kicker – Front	1
26	92–4881	Plate – Height Adjust	2
27	16–9259	Deck Assembly (Incl. Ref. #6 & 7 pg. 1) (Incl. Ref. #14 pg. 2)	1
28	3296–2	Nut – Lock	1
29	32105–27	Screw – Hex Washer Hd.	1

Copyright 1994 The Toro Company Rev. 1995
All Rights Reserved

TPS

3317–152A

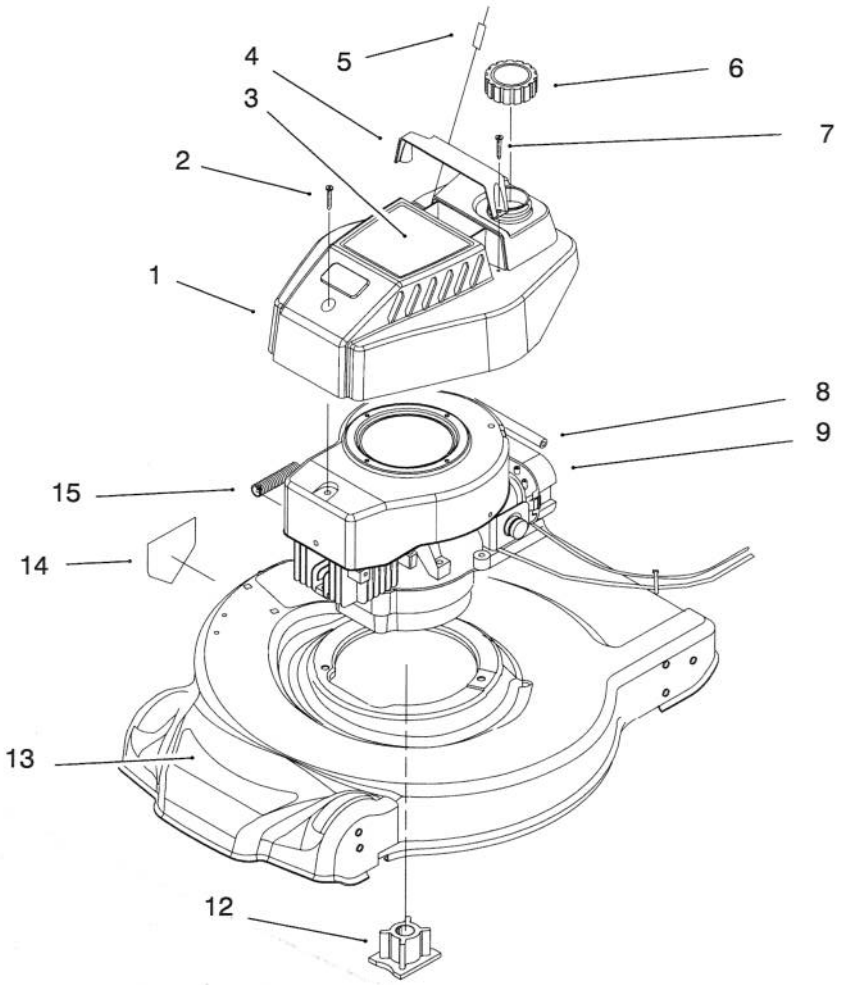

C–2289

ENGINE ASSEMBLY

Ref. No.	Part No.	Description	No. Used
1	92–6396	Shroud – Engine (Model No. 20441 Only)	1
2	93–4302	Screw – Sems (Model No. 20441 Only)	3
3	93–0246	Decal – Engine (Model No. 20441 Only)	1
4	93–1200	Cover – Strap (Model No. 20441 Only)	1
5	92–1701	Rope – Stop (Model No. 20441 Only)	1
6	55–3578	Gas Cap Assembly (Model No. 20441 Only)	1

Ref. No.	Part No.	Description	No. Used
7	32104–118	Screw – Phillips Hd. (Model No. 20441 Only)	2
8	68–3632	Line – Fuel (Model No. 20441 Only)	1
9		Engine (Model No. 20441 Only)	1
12	52–7320	Retainer – Blade (Model No. 20441 Only)	1
13	93–0245	Decal – Deck	1
14	39–5770	Decal – Danger	1
15	66–5370	Spring – Compression (Model No. 20441 Only)	1

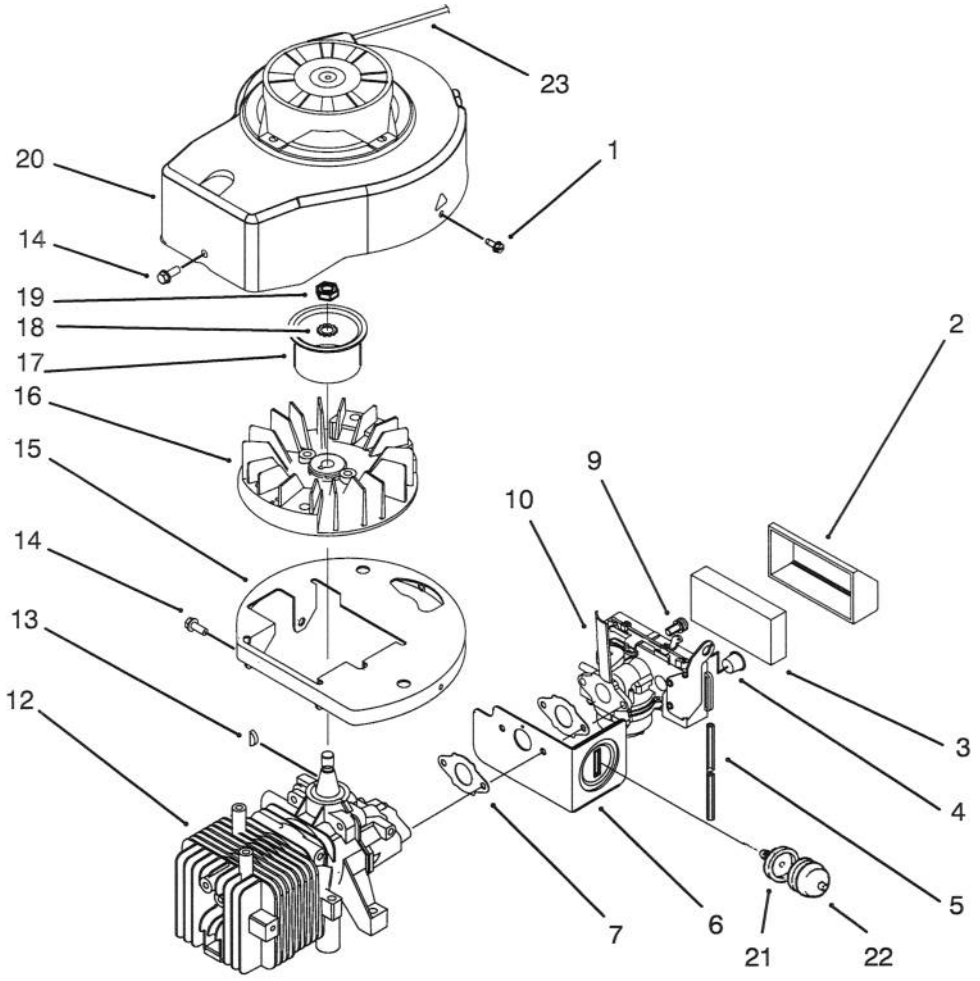

SHROUD & BLOCK ASSEMBLY (Model No. 20441 Only)

Ref. No.	Part No.	Description	No. Used
1	614699	Screw	3
2	93–1231	Cover – Air Filter	1
3	609493	Element – Air Filter	1
4	93–4320	Plug	1
5	44–3175	Hose – Primer	1
6	93–1227	Shield – Carburetor	1
7	92–4948	Gasket – Carburetor	2
9	609482	Screw	2
10	92–9695	Carburetor Assembly	1
12	93–1215	Short Block Assembly	1
13	607199	Key	1

Ref. No.	Part No.	Description	No. Used
14	614702	Screw	4
15	93–1216	Base – Shroud	1
16	684743	Flywheel Assembly	1
17	614640	Hub – Starter	1
18	316959	Washer – Lock	1
19	130743	Nut	1
20	93–1248	Shroud	1
21	44–2750	Body – Primer	1
22	66–7460	Bulb – Primer	1
23	93–4304	Rope	1

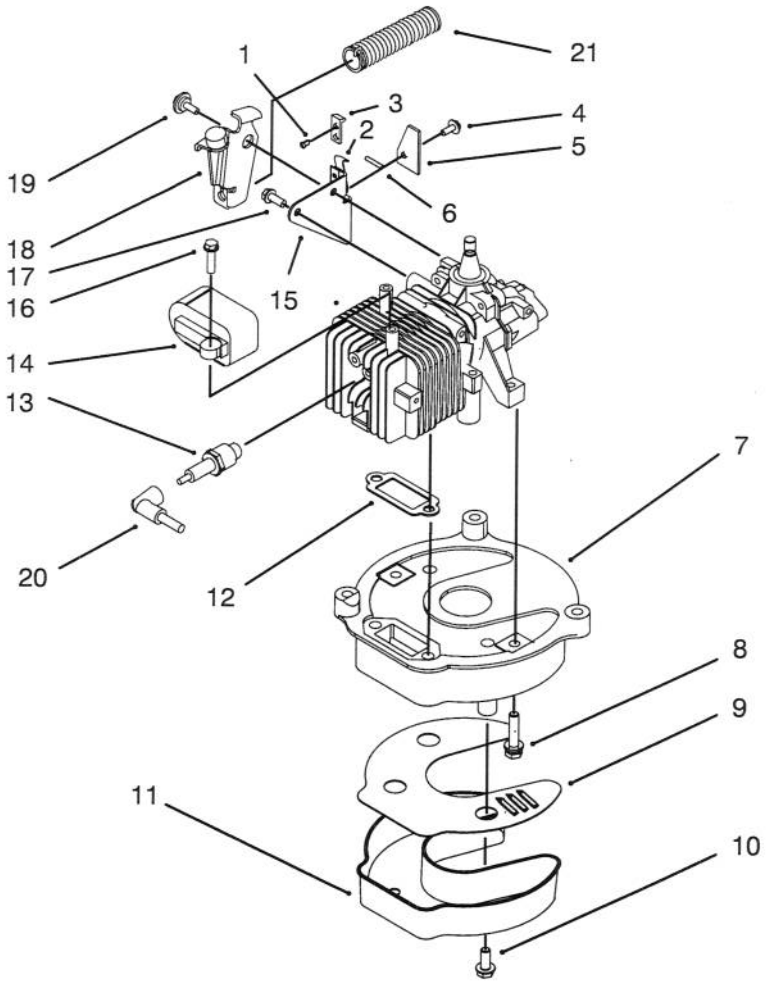

C–1899

BRAKE & MUFFLER ASSEMBLY (Model No. 20441 Only)

Ref. No.	Part No.	Description	No. Used
1	3290–459	Rivet	2
2	60–9010	Strap – Ground	1
3	92–2925	Strap – Insulation	1
4	12–5450	Screw – Thread Forming	1
5	53–4690	Stop – Ground Strap	1
6	92–1156	Wire – Brake Switch Lead	1
7	614654	Plate – Muffler	1
8	607601	Screw	4
9	93–1217	Baffle	1
10	609471	Screw	3
11	93–1108	Cover – Muffler	1

Ref. No.	Part No.	Description	No. Used
12	93–1233	Gasket – Exhaust	1
13	614009	Plug – Spark	1
14	684049	Ignition Assembly (Incl. Ref. #20)	1
15	84–7820	Plate – Brake Mount	1
16	613208	Screw – Hex Washer Hd.	2
17	614702	Screw	1
18	66–5380	Plate – Brake Assembly	1
19	92–9698	Screw – Shoulder	1
20	681678	Lead & Cover Assembly	1
21	66–5370	Spring – Compression	1

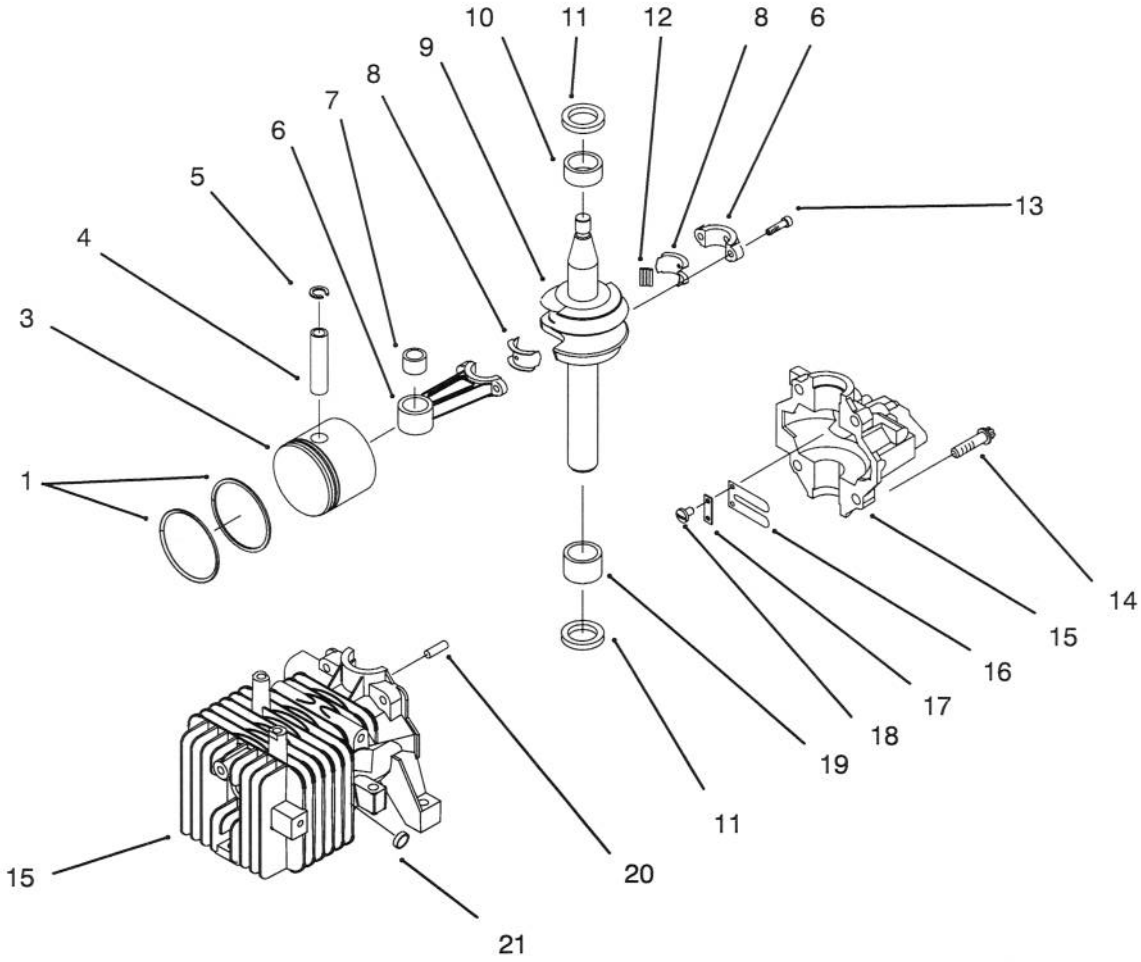

C–2292

BLOCK ASSEMBLY (Model No. 20441 Only)

Ref. No.	Part No.	Description	No. Used
1	681737	Set – Rings, Piston	1
3	92–4923	Piston & Ring Set	1
*	92–4925	Piston & Connecting Rod (Incl. Ref. #1, 3–7 & 13)	1
4	606608	Pin – Wrist	1
5	303712	Ring – Retaining	2
6	92–4921	Connecting Rod Assembly (Incl. Ref. #8, 12 & 13)	1
7	92–4927	Bearing	1
8	677982	Liner – Split (Set of 2)	1
9	92–6379	Crankshaft	1
10	681830	Bearing – Upper Main	1
11	611396	Seal – Oil	2

Ref. No.	Part No.	Description	No. Used
12	683911	Bearing – Needle	1
13	611393	Screw – Hex. Hd.	2
14	614636	Screw – Hex. Washer Hd.	3
15	93–4311	Cylinder & Crankcase Cover (Incl. Ref. #14, 16, 17, 18, 20, & 21)	1
16	602588	Reed – Carburetor	1
17	602587	Reed – Backup Plate	1
18	612872	Screw	2
19	681831	Bearing – Needle	1
20	609629	Dowel	1
21	609123	Plug – Core	4

*Not Illustrated

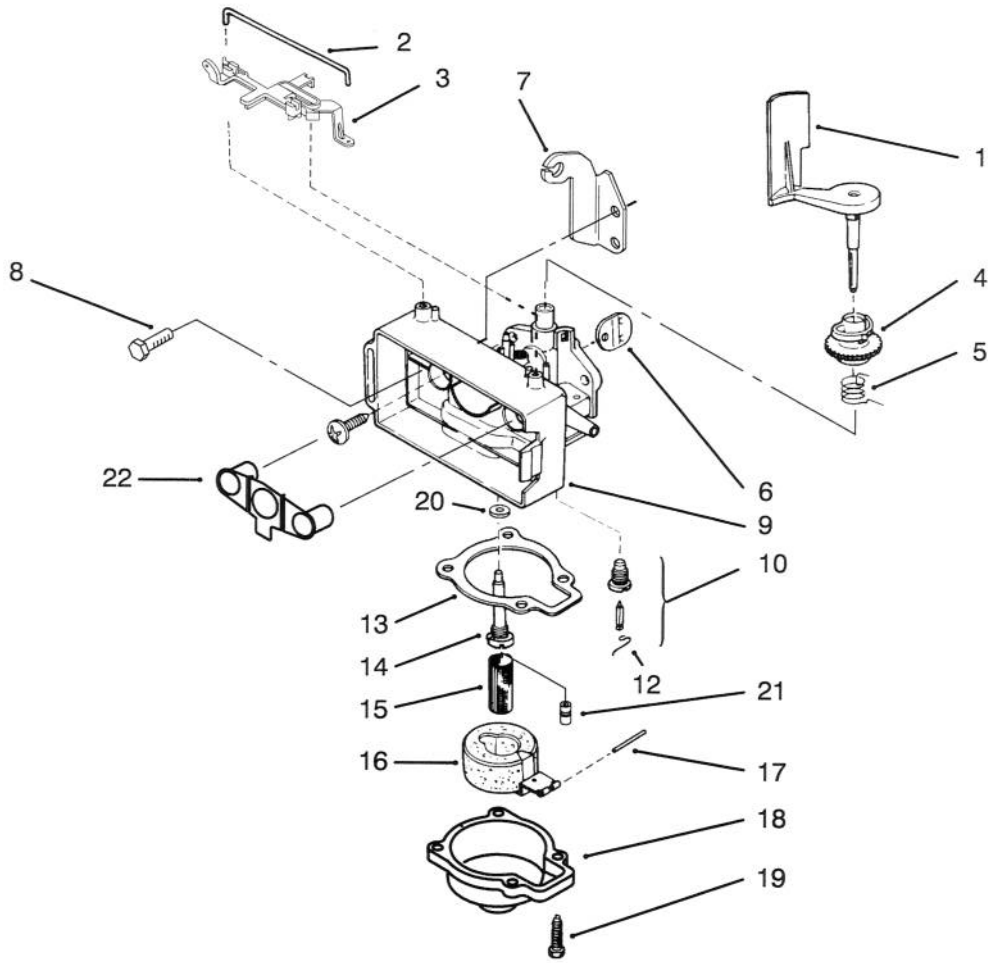

C–2130B

CARBURETOR ASSEMBLY (Model No. 20441 Only)

Ref. No.	Part No.	Description	No. Used
1	92–6376	Air Vane & Shaft	1
2	610165	Retainer – Speed Control	1
3	93–1225	Lever – Speed Adjust	1
4	610834	Collar – Air Vane	1
5	92–4944	Spring – Governor	1
6	92–6373	Disc – Throttle	1
7	92–4949	Bracket – Throttle Control	1
8	613269	Screw	2
9	92–6377	Carburetor Body	1
10	92–9697	Kit – Float Valve, Body & Seat (Incl. Ref. #12)	1
12	603145	Spring	1

Ref. No.	Part No.	Description	No. Used
13	602850	Gasket	1
14	92–6371	Nozzle	1
15	611071	Filter – Fuel	1
16	678113	Float & Arm Assembly	1
17	92–6389	Pin	1
18	92–9691	Float Chamber	1
19	608850	Screw	4
20	612383	Washer	1
21	92–6370	Main Jet	1
22	93–4320	Shield – Fuel	1
*	92–6385	Jet – High Altitude	1
*	92–9695	Carburetor Assembly	1

*Not Illustrated

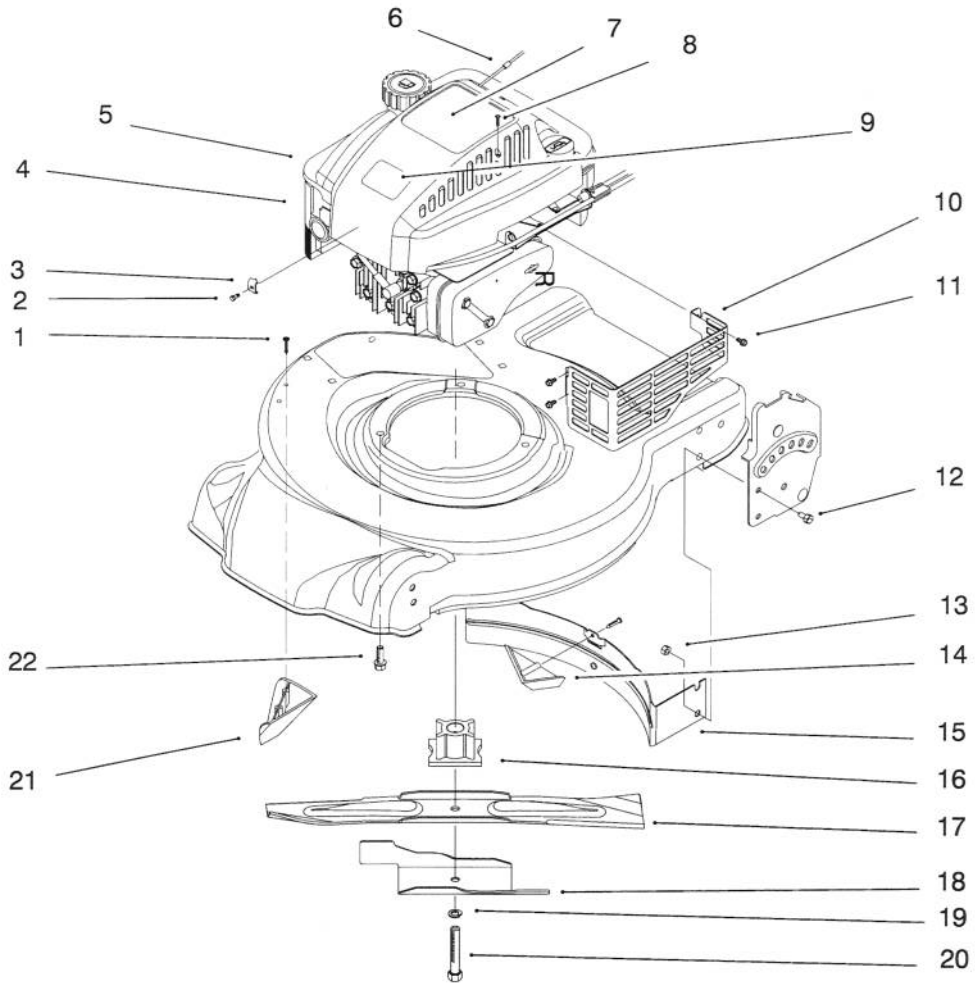

C–2290

ENGINE ASSEMBLY

Ref. No.	Part No.	Description	No. Used
1	32144–111	Screw – Phillips Pan Hd.	2
2	93–8470	Screw – Clamp (P/W Eng.) (Model No. 20443 Only)	1
3	2210–249	Clamp – Casing (P/W Eng.) (Model No. 20443 Only)	1
4		Engine – Quantum 4HP (Model No. 20443 Only)	1
5	93–0243	Shroud – Qt Wedge (Model No. 20443 Only)	1
6	2210–316	Stop – Rope (P/W Eng.) (Model No. 20443 Only)	1
7	93–0247	Decal – Engine (Model No. 20443 Only)	1
8	32144–121	Screw (Model No. 20443 Only)	2
9	92–2289	Plate – Logo	1
10	82–8550	Shield – Muffler Model No. 20443 Only)	1

Ref. No.	Part No.	Description	No. Used
11	32144–73	Screw – Hex Washer Hd. Thread Forming (Model No. 20443 Only)	3
12	322–3	Screw – Hex Hd. Cap	4
13	3296–29	Nut – Lock	4
14	93–0217	Kicker – Rear	1
15	93–0223	Baffle – Rear	1
16	62–7540	Retainer – Blade (Model No. 20443 Only)	1
17	93–0241	Blade – Steel Deck	1
18	93–0219	Accelerator	1
19	3253–22	Washer – Lock	1
20	26–0670	Bolt – Blade	1
21	93–0218	Kicker – Side	1
22	92–1624	Screw – Engine	3

3317–152A

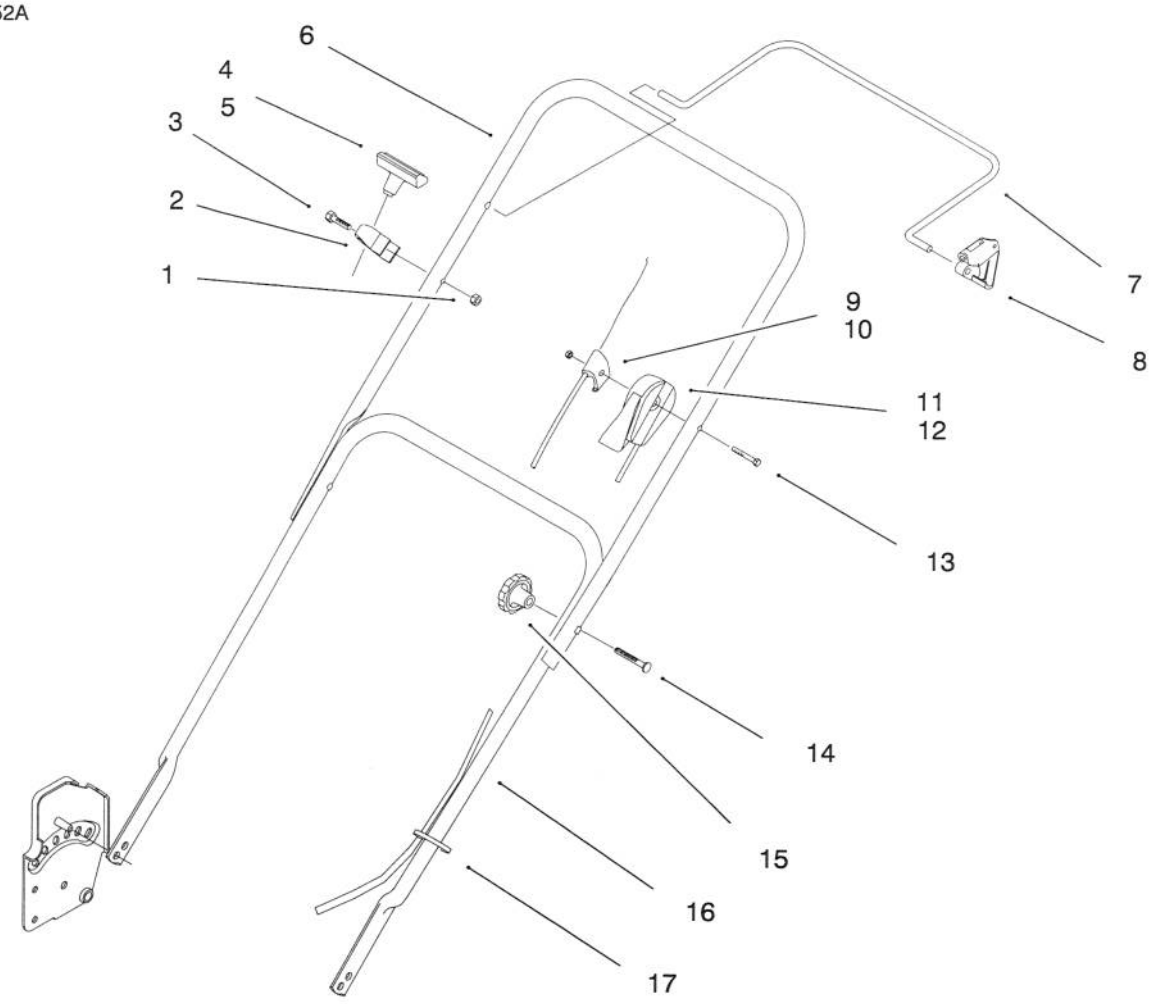

C–2291

HANDLE ASSEMBLY

Ref. No.	Part No.	Description	No. Used
1	3296–73	Nut – Lock	2
2	93–7383	Guide – Rope	1
3	321–51	Screw – Hex Hd. Cap	1
4	612825	Handle – Starter (Model No. 20441 Only)	1
5	612824	Clip – Rope Insert (Model No. 20441 Only)	1
6	93–0237	Handle – Upper	1
7	92–3134	Bar – Control	1
8	92–5412	Stop – Pivot	1
9	93–0253	Cable – Brake (Model No. 20443 Only)	1
10	93–0257	Cable – Brake (Model No. 20441 Only)	1

Ref. No.	Part No.	Description	No. Used
11	93–0252	Cable – Throttle (Model No. 20443 Only)	1
12	93–0256	Cable – Throttle (Model No. 20441 Only)	1
13	92–2269	Screw – Handle	1
14	92–2260	Screw – Handle	2
15	19–4050	Knob	2
16	93–0238	Handle – Lower	1
17	3290–378	Tie – Cable (Model No. 20443 Only)	1
17	3290–378	Tie – Cable (Model No. 20441 Only)	2

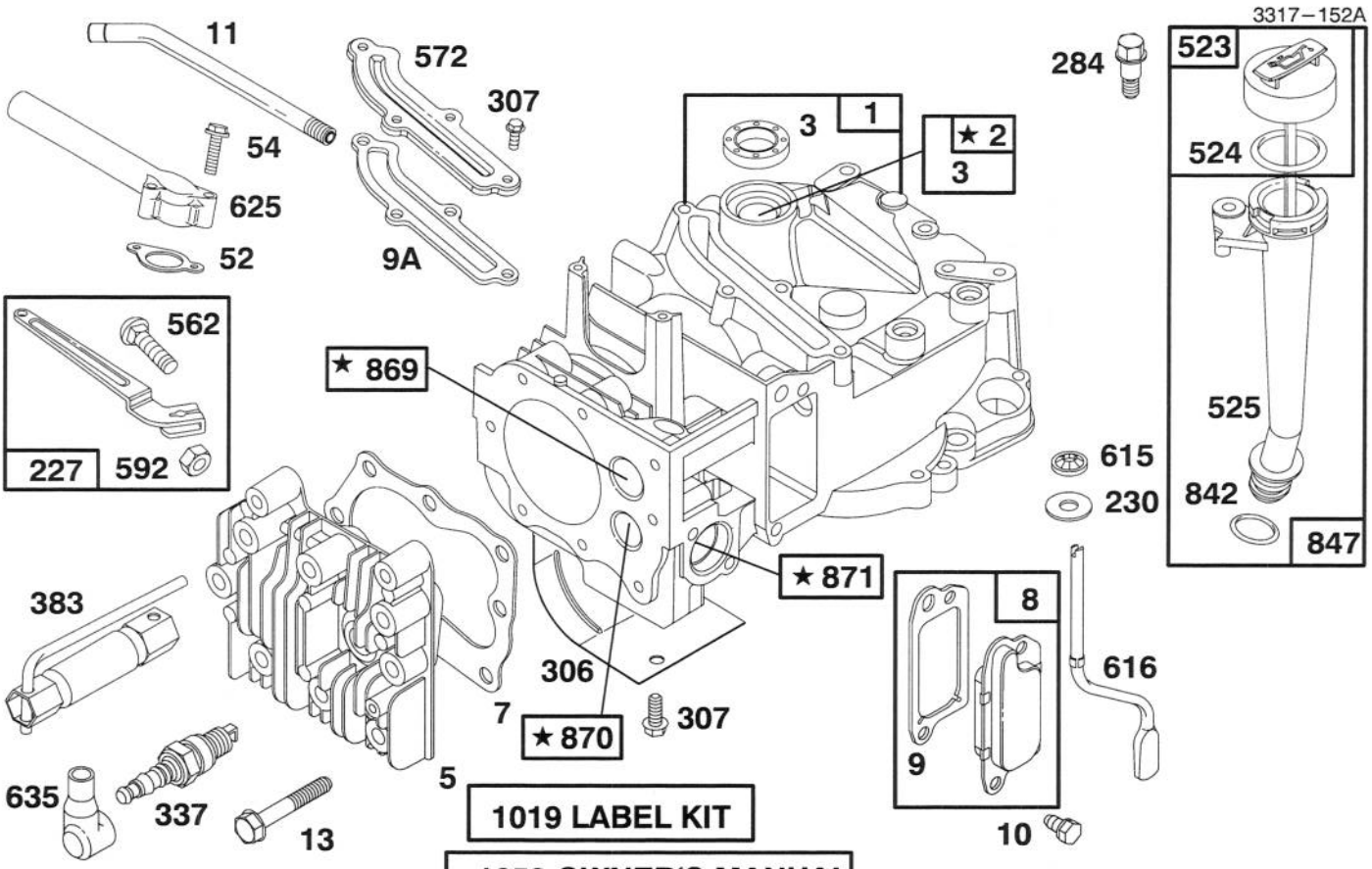

★ **REQUIRES SPECIAL TOOLS TO INSTALL. SEE REPAIR INSTRUCTION MANUAL.**

Assemblies include all parts shown in frames.

ENGINE BRIGGS & STRATTON MODEL 127802-0640–01

Ref. No.	Part No.	Description	No. Used
1	493260	Cylinder Assembly	1
2	293708	Bushing – Cylinder	1
★3	299819	Seal – Oil	1
5	214349	Head – Cylinder	1
★7	272916	Gasket – Cylinder Head	1
8	495786	Breather – Valve Chamber	1
★9	272481	Gasket – Valve Cover	1
★9A	272238	Gasket – Baffle Plate	1
10	94650	Screw – Breather Mtg.	1
11	231933	Tube – Breather	1
13	94547	Screw – Cylinder Head	1
★52	272199	Gasket – Intake Elbow	1
54	94526	Screw – Intake Elbow Mounting	1
227	492349	Lever Assembly – Gov.	1
230	67072	Washer – Gov. Crank	1
284	94511	Screw – Hex. Head	1
306	224324	Shield – Cylinder	1
307	94515	Screw – Hex. Head	1
337	802592	Plug – Spark	1
383	89838	Wrench – Spark Plug	1

Ref. No.	Part No.	Description	No. Used
523	495264	Cap With Dipstick – Oil Filler	1
★524	280393	Seal – Filler Tube	1
525	495265	Tube – Oil Filler	1
562	92613	Bolt – Governor Lever	1
572	224328	Baffle – Cylinder	1
592	231082	Nut – Hex.	1
615	94474	Fastener	1
616	262578	Crank – Governor	1
625	281085	Tube – Fuel Intake	1
635	66538	Elbow – Spark Plug	1
★842	280966	Seal – O-Ring	1
847	495263	Oil Fill Tube Assy.	1
869	213512	Seat – Intake Valve	1
870	213513	Seat – Exhaust Valve	1
871	262001	Guide – Exhaust Valve **Note:** 63709 Guide – Intake Valve	1 1
1019	494256	Label Kit	1
1058	272262	Owner's Manual	1

★ Included in Gasket Set–Part No. 496117.

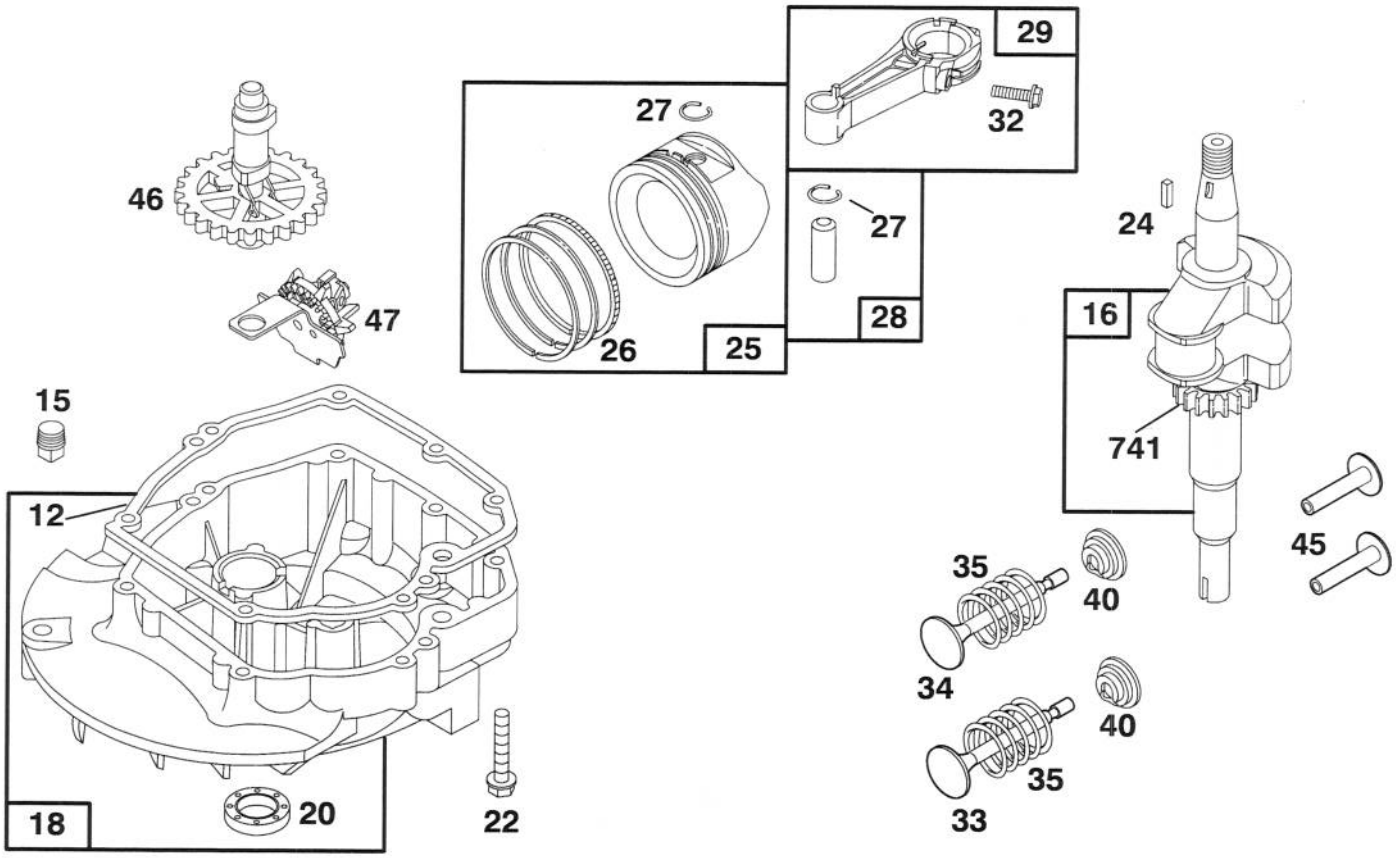

Assemblies include all parts shown in frames.

ENGINE BRIGGS & STRATTON MODEL 127802-0640–01

Ref. No.	Part No.	Description	No. Used
★12	272198	Gasket – Crankcase	1
15	94720	Plug – Oil Drain	1
16	494546	Crankshaft	1
		Note: Order 94388 For Timing Gear Key.	1
18	493279	Sump – Engine	1
★20	399781	Seal – Oil	1
22	94220	Screw – Hex. Head	1
		Note: 94612 Screw – Hex. Head	1
		(One (1) Used in Hole Nearest Breather.)	1
24	222698	Key – Flywheel	1
25	493262	Piston Assy. (Standard)	1
	493385	Piston Assy. (.010" O.S.)	1
	493386	Piston Assy. (.020" O.S.)	1
	493387	Piston Assy. (.030" O.S.)	1
26	493261	Ring Set (Standard)	1
	493388	Ring Set (.010" O.S.)	1
	493389	Ring Set (.020" O.S.)	1
	493390	Ring Set (.030" O.S.)	1

Ref. No.	Part No.	Description	No. Used
27	26026	Lock – Piston Pin	1
28	298909	Pin – Piston (Standard)	1
	298908	Pin – Piston (.005" O.S.)	1
29	490566	Rod Assembly – Conn.	1
		Note: For Conn. Rod With .020" Undersize Crankpin Bearing – Order No. 490743.	1
32	94699	Screw – Conn. Rod	1
33	262651	Valve – Exhaust	1
34	262652	Valve – Intake	1
35	262224	Spring – Valve	1
40	93312	Retainer – Valve Spring	1
45	262204	Tappet – Valve	1
46	492828	Gear – Cam	1
47	493737	Slinger – Oil	1
741	262598	Gear – Timing	1

★ Included in Gasket Set–Part No. 496117.

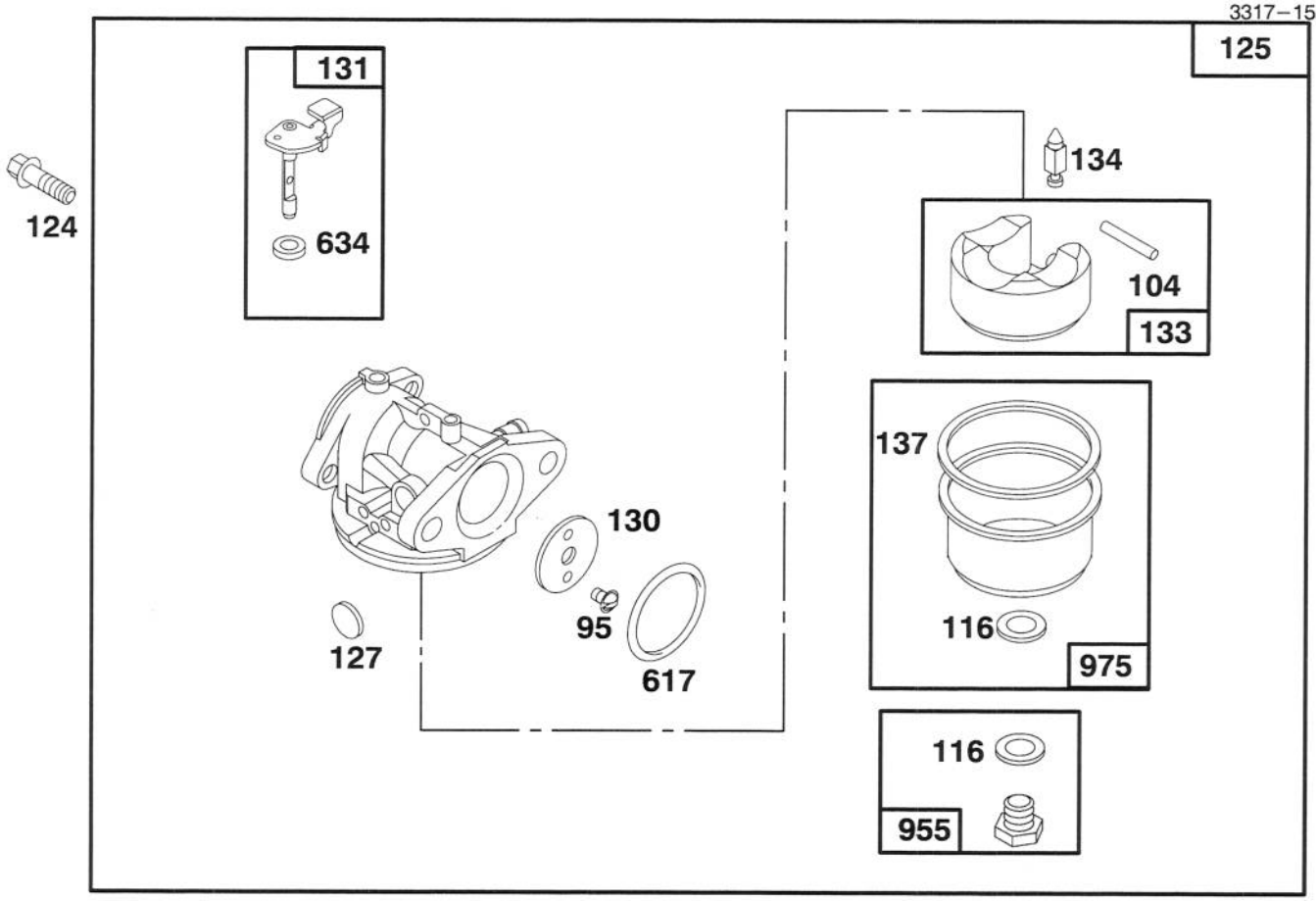

Assemblies include all parts shown in frames.

ENGINE BRIGGS & STRATTON MODEL 127802-0640–01

Ref. No.	Part No.	Description	No. Used
95	94098	Screw – Throttle Valve Mounting	1
●104	231371	Pin – Float Hinge	1
●◆116		Gasket–Sealing (Sold in Kit Only).	1
124	94525	Screw – Carburetor Mtg.	1
125	497314	Carburetor	1
●127		Plug – Welch (Sold in Kit Only).	1
130	224908	Valve – Throttle	1
131	493267	Shaft – Throttle	1
133	398187	Float Assy. – Carburetor	1

Ref. No.	Part No.	Description	No. Used
●134	398188	Valve – Inlet (Includes Seat)	1
●◆137		Gasket – Bowl (Sold in Kit Only).	1
●◆617	270344	Seal – Fuel Intake Tube	1
●◆634		Washer–Shaft (Sold in Kit Only).	1
955	497315	Screw – Bowl Mtg. (Std.)	1
		Note: 496495 Screw – Bowl Mtg. (High Altitude)	1
975	493640	Bowl Assy. – Carburetor	1

● Included in Carburetor Kit–Part No. 493762.
◆ Included in Carburetor Gasket Set–Part No. 490937.

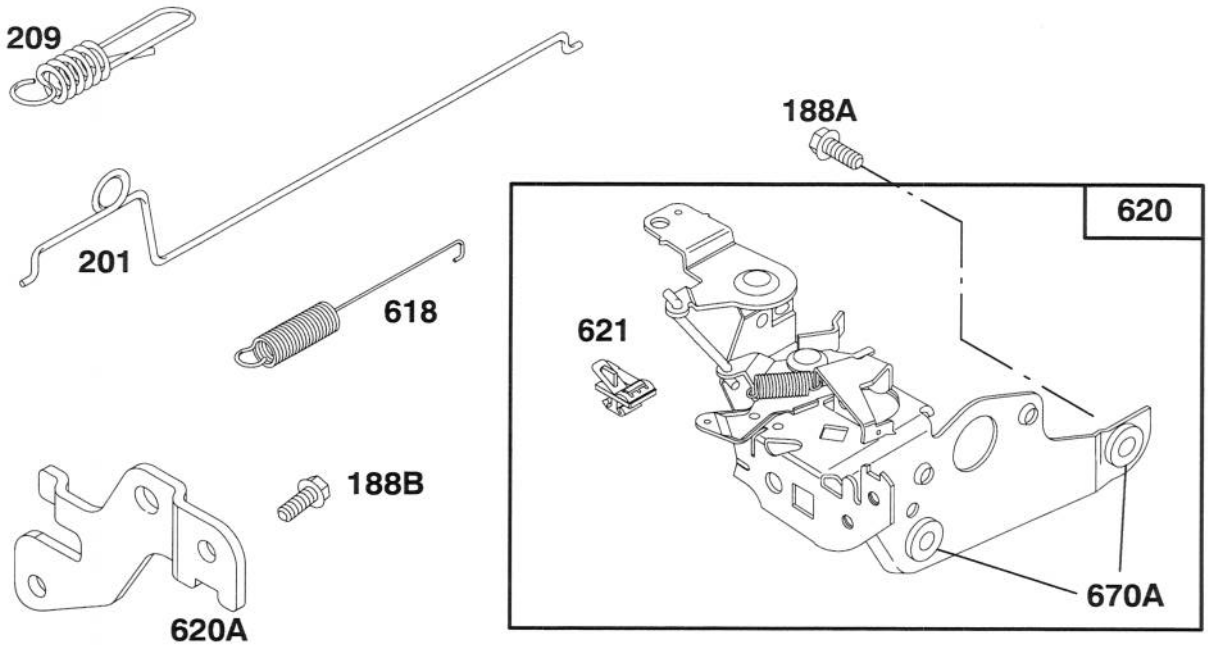

Assemblies include all parts shown in frames.

ENGINE BRIGGS & STRATTON MODEL 127802-0640–01

Ref. No.	Part No.	Description	No. Used
188A	94644	Screw – Hex. Head	1
188B	94602	Screw – Hex. Head	1
201	262579	Link – Governor	1
209	262661	Spring – Governor	1
618	262749	Spring – Return	1

Ref. No.	Part No.	Description	No. Used
620	497203	Bracket – Carburetor	1
620A	225152	Bracket – Control	1
621	396847	Switch – Stop	1
670A	493823	Spacer – Bracket	1

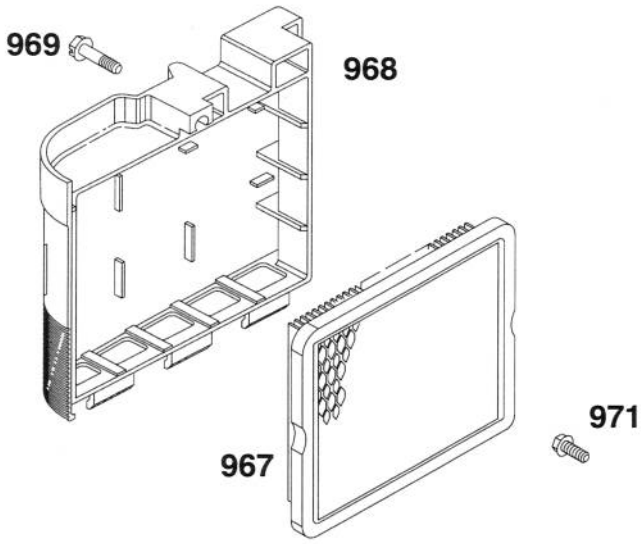

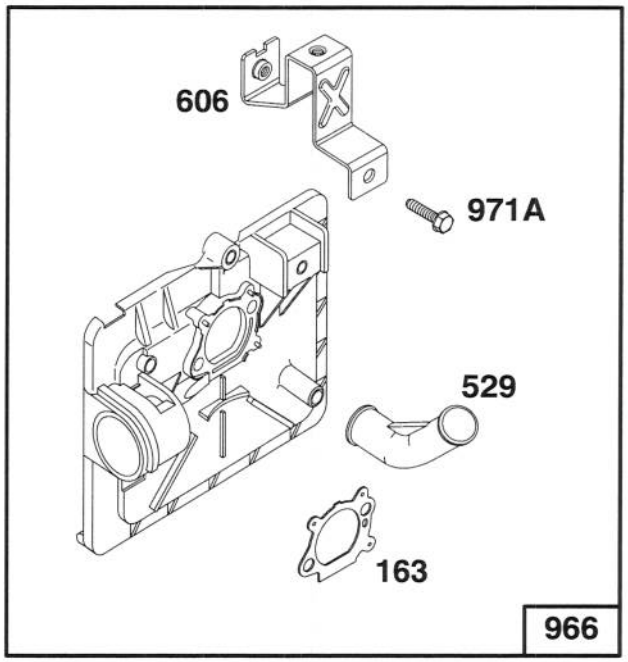

Assemblies include all parts shown in frames.

ENGINE BRIGGS & STRATTON MODEL 127802-0640–01

Ref. No.	Part No.	Description	No. Used
163	272653	Gasket – Air Cleaner	1
529	281299	Grommet – Breather	1
606	224815	Strap – Bracket	1
966	496116	Base – Air Cleaner	1
967	491588	Filter – Air	1

Ref. No.	Part No.	Description	No. Used
968	281340	Cover – Air Cleaner	1
969	94120	Screw – Cover Mtg.	1
971	94121	Screw – Air Cleaner	1
971A	94749	Screw – Hex. Head	1

★ Included in Gasket Set–Part No. 496117.

3317–152A

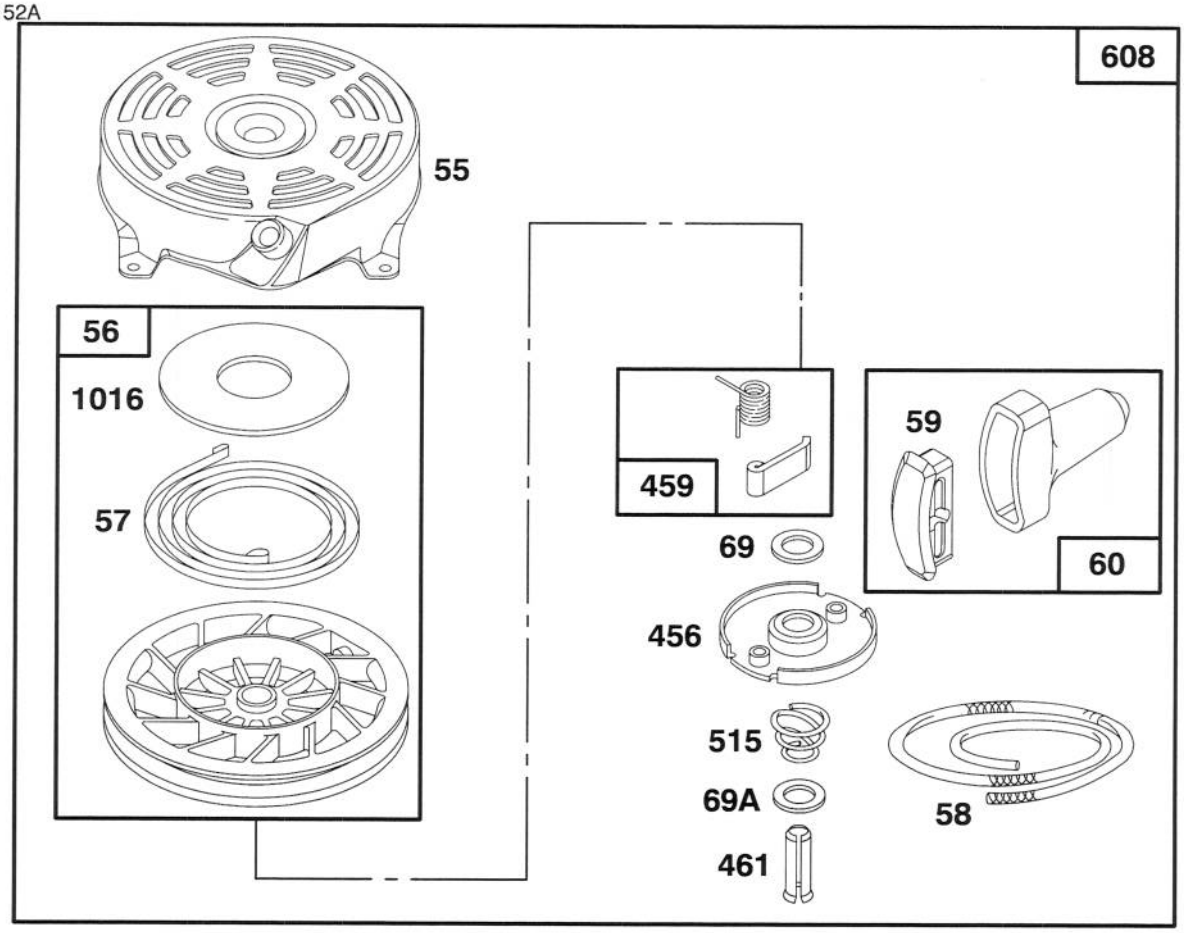

Assemblies include all parts shown in frames.

ENGINE BRIGGS & STRATTON MODEL 127802-0640–01

Ref. No.	Part No.	Description	No. Used
55	492831	Housing – Rewind Starter	1
56	493824	Pulley – Rewind Starter	1
57	262594	Spring – Rewind Starter	1
58	280399	Rope – Rewind Starter	1
59	396892	Insert – Handle	1
60	393152	Handle – Rewind Starter	1
69	280973	Washer – Rewind Starter	1
69A	224322	Washer – Rewind Starter	1
456	224321	Retainer – Rewind Starter	1

Ref. No.	Part No.	Description	No. Used
459	492833	Pawl – Starter	1
461	262626	Pin – Starter	1
515	262625	Spring – Torsion	1
608	493295	Starter Assy. – Rewind	1
		Includes:	
		94128 Screw – Hex. Hd.	1
		92987 Nut – Hex.	1
1016	224278	Cover – Rewind Starter	1

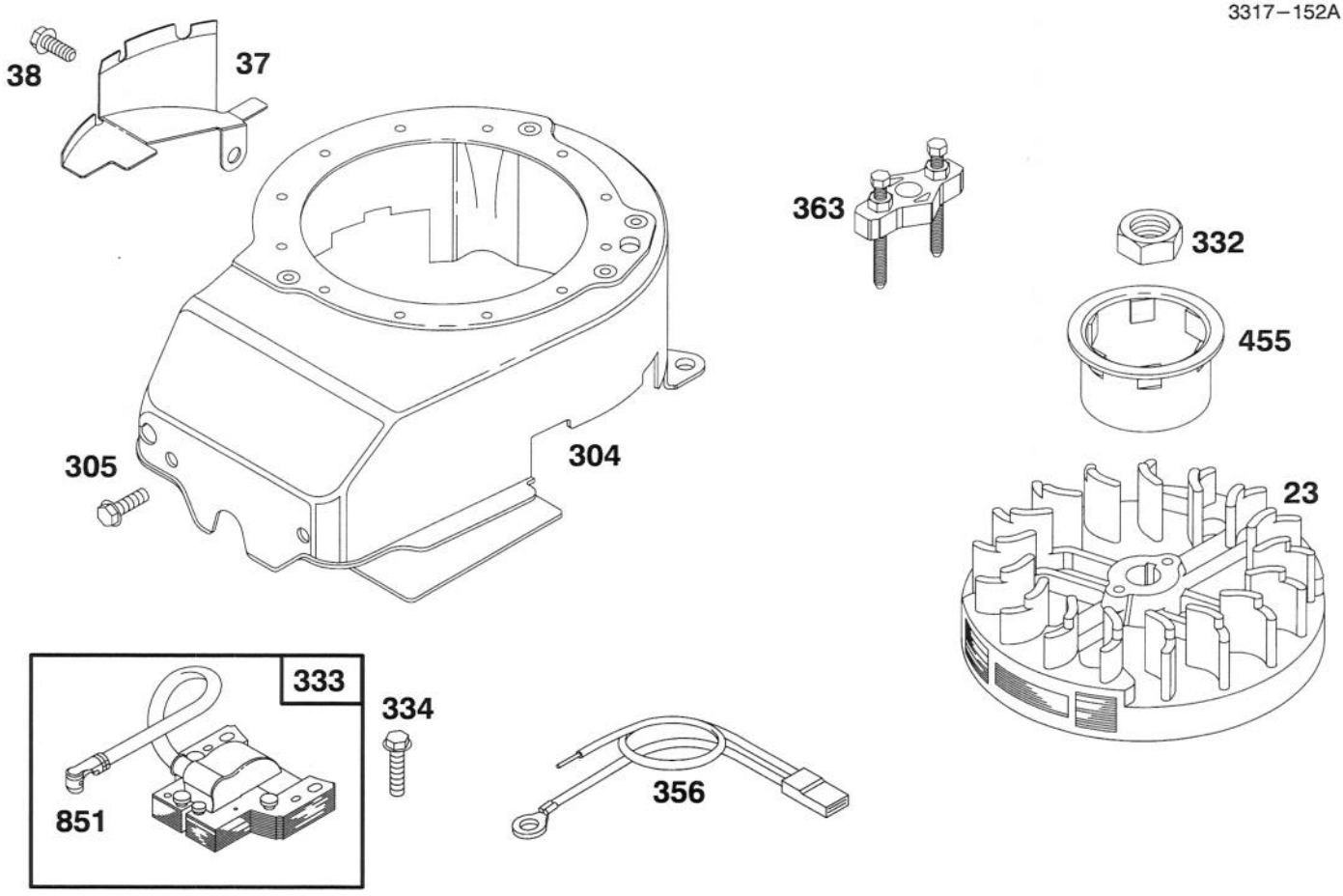

Assemblies include all parts shown in frames.

ENGINE BRIGGS & STRATTON MODEL 127802-0640–01

Ref. No.	Part No.	Description	No. Used
23	492177	Flywheel	1
37	224511	Guard – Flywheel	1
38	94786	Screw – Hex. Head	1
304	493294	Housing – Blower	1
305	94786	Screw – Sem	1
332	92284	Nut – Flywheel	1

Ref. No.	Part No.	Description	No. Used
333	802574	Armature – Magneto	1
334	94731	Screw – Sem	1
356	398808	Wire – Ground	1
363	19069	Puller – Flywheel	1
455	224250	Cup – Starter	1
851	493880	Terminal – Ignition Cable	1

3317–152A

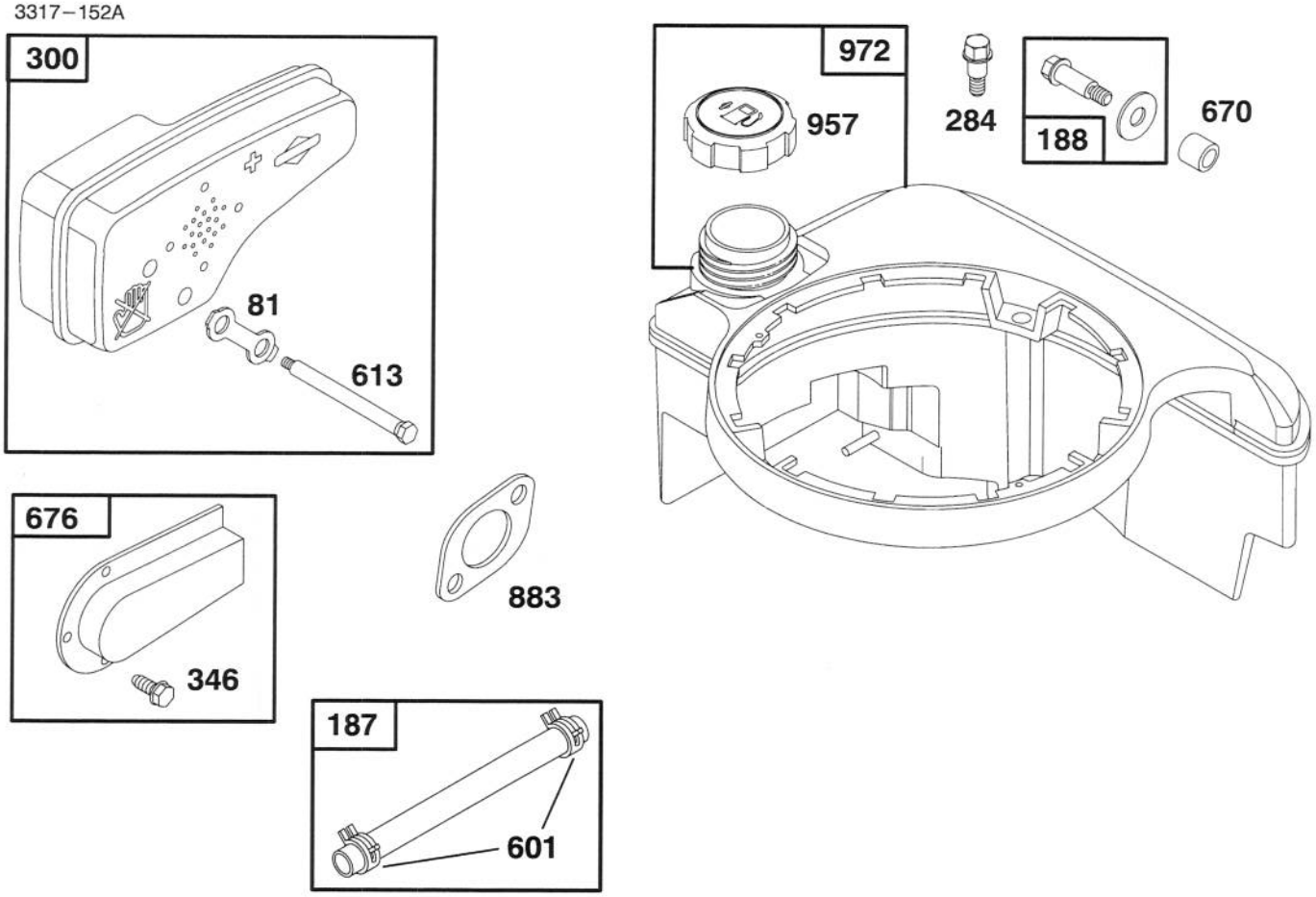

Assemblies include all parts shown in frames.

ENGINE BRIGGS & STRATTON MODEL 127802-0640–01

Ref. No.	Part No.	Description	No. Used
81	223664	Lock – Muffler Screw	1
187	492790	Hose – Fuel	1
188	398540	Screw – Tank Mounting	1
284	94511	Screw – Hex. Head	1
300	490547	Muffler – Exhaust	1
346	93705	Screw – Hex. Head	1
601	93807	Clamp – Hose	1

Ref. No.	Part No.	Description	No. Used
613	94231	Screw – Muffler Mtg.	1
670	280512	Spacer – Fuel Tank	1
676	493871	Deflector – Muffler	1
★883	272253	Gasket – Exhaust	1
957	397974	Cap Assy. – Fuel	1
972	495224	Tank Assembly – Fuel	1

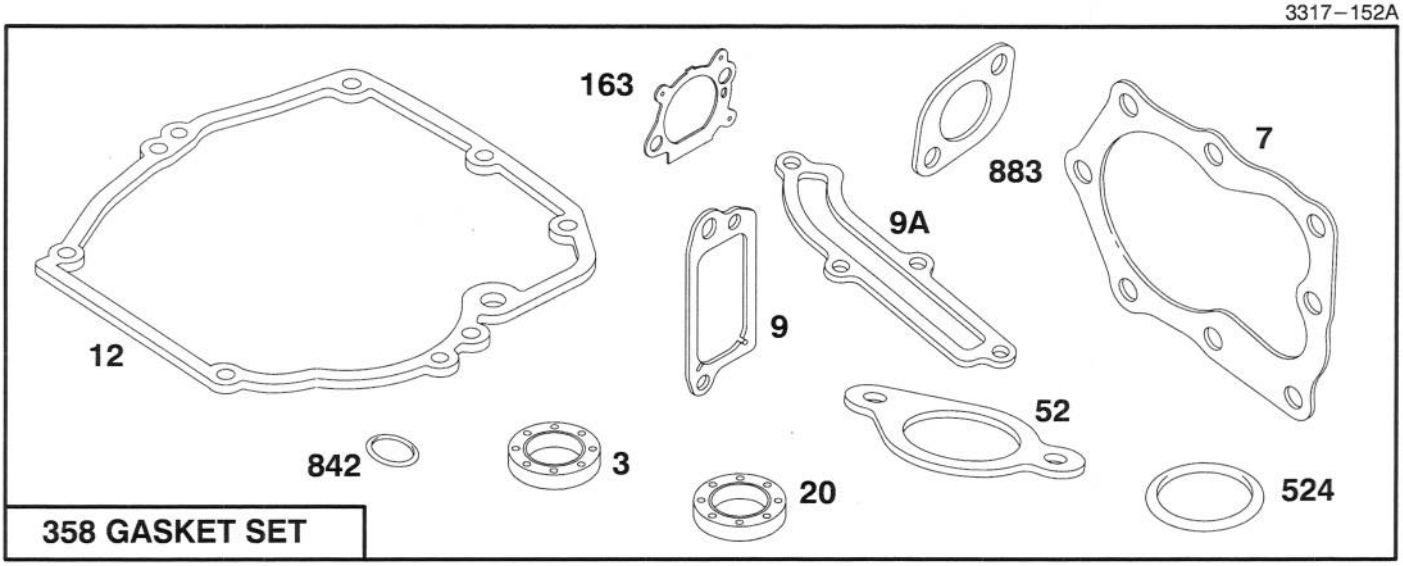

358 GASKET SET

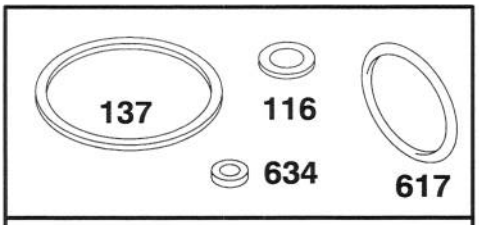

977 CARBURETOR GASKET SET

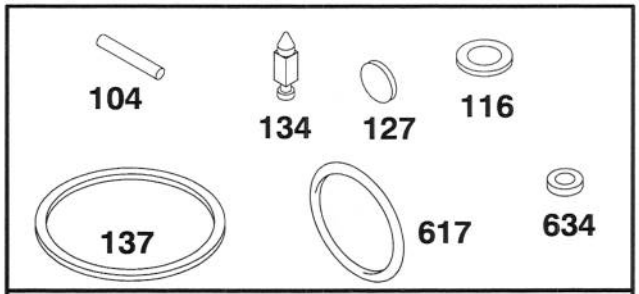

121 CARBURETOR KIT

Assemblies include all parts shown in frames.

ENGINE BRIGGS & STRATTON MODEL 127802-0640–01

Ref. No.	Part No.	Description	No. Used
★3	299819	Seal – Oil	1
★7	272916	Gasket – Cylinder Hd.	1
★9	272481	Gasket – Valve Cover	1
★9A	272238	Gasket – Baffle Plate	1
★12	272198	Gasket – Crankcase	1
★20	399781	Seal – Oil	1
★52	272199	Gasket – Intake Elbow	1
●104	231371	Pin – Float Hinge	1
●◆116		Gasket – Sealing (Sold in Kit Only).	1
121	493762	Carburetor Kit	1
●127		Plug – Welch (Sold in Kit Only).	1
●134	398188	Valve – Inlet (Includes Seat)	1
●◆137		Gasket – Bowl (Sold in Kit Only).	1
★163	272653	Gasket – Air Cleaner	1
358	497316	Gasket Set	1
★524	280393	Seal – Filler Tube	1
●◆617	270344	Seal – Fuel Intake Tube	1
●◆634		Washer – Shaft (Sold in Kit Only).	1
★842	280966	Seal – O-Ring	1
★883	272253	Gasket – Exhaust	1
977	490937	Gasket Set – Carburetor	1

● Included in Carburetor Kit–Part No. 493762.
◆ Included in Carburetor Gasket Set–Part No. 490937.
★ Included in Gasket Set–Part No. 496117.

TORO PART NUMBER INDEX

Part No.	Description	Pg. No.	Ref. No.	Qty.
	Engine	2	9	1
	Engine – Quantum 4HP	7	4	1
130743	Nut	3	19	1
303712	Ring – Retaining	5	5	2
316959	Washer – Lock	3	18	1
602587	Reed – Backup Plate	5	17	1
602588	Reed – Carburetor	5	16	1
602850	Gasket	6	13	1
603145	Spring	6	12	1
606608	Pin – Wrist	5	4	1
607199	Key	3	13	1
607601	Screw	4	8	4
608850	Screw	6	19	4
609123	Plug – Core	5	21	4
609471	Screw	4	10	3
609482	Screw	3	9	2
609493	Element – Air Filter	3	3	1
609629	Dowel	5	20	1
610165	Retainer – Speed Control	6	2	1
610834	Collar – Air Vane	6	4	1
611071	Filter – Fuel	6	15	1
611393	Screw – Hex. Hd.	5	13	2
611396	Seal – Oil	5	11	2
612383	Washer	6	20	1
612824	Clip – Rope Insert	8	5	1
612825	Handle – Starter	8	4	1
612872	Screw	5	18	2
613208	Screw – Hex Washer Hd.	4	16	2
613269	Screw	6	8	2
614009	Plug – Spark	4	13	1
614636	Screw – Hex. Washer Hd.	5	14	3
614637	Bracket – Wheel Height Adj.	1	20	4
614640	Hub – Starter	3	17	1
614650	Bolt – Shoulder	1	13	4
614654	Plate – Muffler	4	7	1
614672	Bolt – Shoulder	1	18	4
614687	Spring Arm Assembly	1	17	2
614699	Screw	3	1	3
614702	Screw	3	14	4
614702	Screw	4	17	1
677982	Liner – Split (Set of 2)	5	8	1
678113	Float & Arm Assembly	6	16	1
681678	Lead & Cover Assembly	4	20	1
681737	Set – Rings, Piston	5	1	1
681830	Bearing – Upper Main	5	10	1
681831	Bearing – Needle	5	19	1
683911	Bearing – Needle	5	12	1
684049	Ignition Assembly	4	14	1
684743	Flywheel Assembly	3	16	1
12–5450	Screw – Thread Forming	4	4	1
16–9259	Deck Assembly	1	27	1
16–9269	Cover – Recycling	1	1	1
19–4050	Knob	8	15	2
26–0670	Bolt – Blade	7	20	1
39–5770	Decal – Danger	2	14	1
40–1940	Washer	1	15	4
44–2750	Body – Primer	3	21	1
44–3175	Hose – Primer	3	5	1
52–7320	Retainer – Blade	2	12	1
53–4690	Stop – Ground Strap	4	5	1
55–3578	Gas Cap Assembly	2	6	1
60–9010	Strap – Ground	4	2	1
62–7540	Retainer – Blade	7	16	1
66–5370	Spring – Compression	2	15	1
66–5370	Spring – Compression	4	21	1
66–5380	Plate – Brake Assembly	4	18	1
66–7460	Bulb – Primer	3	22	1
68–3632	Line – Fuel	2	8	1
82–8550	Shield – Muffler	7	10	1
84–7820	Plate – Brake Mount	4	15	1
85–7060	Decal – Danger	1	4	1
92–1005	Spring Arm Assembly	1	11	2
92–1008	Knob – Height Adjust	1	16	4
92–1156	Wire – Brake Switch Lead	4	6	1
92–1624	Screw – Engine	7	22	3
92–1701	Rope – Stop	2	5	1
92–2260	Screw – Handle	8	14	2
92–2269	Screw – Handle	8	13	1
92–2289	Plate – Logo	7	9	1
92–2914	Decal – HOC R.H.	1	9	1
92–2915	Decal – HOC L.H.	1	8	1
92–2925	Strap – Insulation	4	3	1
92–3134	Bar – Control	8	7	1
92–4881	Plate – Height Adjust	1	26	2
92–4890	Washer	1	21	4
92–4921	Connecting Rod Assembly	5	6	1
92–4923	Piston & Ring Set	5	3	1
92–4925	Piston & Connecting Rod	5	*	1
92–4927	Bearing	5	7	1
92–4944	Spring – Governor	6	5	1
92–4948	Gasket – Carburetor	3	7	2
92–4949	Bracket – Throttle Control	6	7	1
92–5412	Stop – Pivot	8	8	1
92–6370	Main Jet	6	21	1
92–6371	Nozzle	6	14	1
92–6373	Disc – Throttle	6	6	1
92–6376	Air Vane & Shaft	6	1	1
92–6377	Carburetor Body	6	9	1
92–6379	Crankshaft	5	9	1
92–6385	Jet – High Altitude	6	*	1
92–6389	Pin	6	17	1
92–6396	Shroud – Engine	2	1	1
92–8647	Shield – Trailing	1	14	1
92–9591	Wheel Assembly	1	19	2
92–9592	Wheel Assembly	1	12	2
92–9691	Float Chamber	6	18	1
92–9695	Carburetor Assembly	6	*	1
92–9695	Carburetor Assembly	3	10	1
92–9697	Kit – Float Valve, Body	6	10	1
92–9698	Screw – Shoulder	4	19	1
93–0216	Kicker – Front	1	25	1
93–0217	Kicker – Rear	7	14	1
93–0218	Kicker – Side	7	21	1
93–0219	Accelerator	7	18	1
93–0222	Baffle – Front	1	24	1
93–0223	Baffle – Rear	7	15	1
93–0231	Screw – Plastite	1	23	2
93–0235	Bracket – Handle L.H.	1	10	1
93–0236	Bracket – Handle R.H.	1	5	1
93–0237	Handle – Upper	8	6	1
93–0238	Handle – Lower	8	16	1
93–0241	Blade – Steel Deck	7	17	1
93–0242	Grommet	1	2	4
93–0243	Shroud – Qt Wedge	7	5	1
93–0245	Decal – Deck	2	13	1
93–0246	Decal – Engine	2	3	1
93–0247	Decal – Engine	7	7	1
93–0248	Decal – Warning	1	7	1

*Not Illustrated

TORO PART NUMBER INDEX (Cont.)

Part No.	Description	Pg. No.	Ref. No.	Qty.
93–0252	Cable – Throttle	8	11	1
93–0253	Cable – Brake	8	9	1
93–0256	Cable – Throttle	8	12	1
93–0257	Cable – Brake	8	10	1
93–0262	Decal – Warning	1	6	1
93–1108	Cover – Muffler	4	11	1
93–1200	Cover – Strap	2	4	1
93–1215	Short Block Assembly	3	12	1
93–1216	Base – Shroud	3	15	1
93–1217	Baffle	4	9	1
93–1225	Lever – Speed Adjust	6	3	1
93–1227	Shield – Carburetor	3	6	1
93–1231	Cover – Air Filter	3	2	1
93–1233	Gasket – Exhaust	4	12	1
93–1248	Shroud	3	20	1
93–4302	Screw – Sems	2	2	3
93–4304	Rope	3	23	1
93–4311	Cylinder & Crankcase Cover	5	15	1
93–4320	Plug	3	4	1
93–4320	Shield – Fuel	6	22	1
93–7383	Guide – Rope	8	2	1
93–8470	Screw – Clamp (P/W Eng.)	7	2	1
2210–249	Clamp – Casing (P/W Eng.)	7	3	1
2210–316	Stop – Rope (P/W Eng.)	7	6	1
321–51	Screw – Hex Hd. Cap	8	3	1
322–3	Screw – Hex Hd. Cap	7	12	4
3253–22	Washer – Lock	7	19	1
3290–378	Tie – Cable	8	17	1
3290–378	Tie – Cable	8	17	2
3290–459	Rivet	4	1	2
3296–2	Nut – Lock	1	28	1
3296–29	Nut – Lock	7	13	4
3296–39	Nut – Lock	1	22	4
3296–73	Nut – Lock	8	1	2
32104–118	Screw – Phillips Hd.	2	7	2
32105–27	Screw – Hex Washer Hd.	1	29	1
32144–4	Screw – Tapping	1	3	4
32144–73	Screw – Hex Washer Hd.	7	11	3
32144–111	Screw – Phillips Pan Hd.	7	1	2
32144–121	Screw	7	8	2

OPTIONAL EQUIPMENT

Recycler Side Discharge Kit .... Model No. 59291

Recycler Bagging Kit ..... Model No. 59290

*Not Illustrated

PRODUCT CHANGES

In an effort to make improvements available to TORO owners as quickly as possible, minor changes are incorporated into Toro's products from time to time that do not become immediately shown in the Parts Catalog. If such a change has been made in your unit, which is not reflected in your manual, see your TORO Distributor or his Authorized TORO Service Dealer for information and part numbers.

COUNTRIES OTHER THAN THE UNITED STATES OR CANADA

Customers who have purchased TORO products exported from the United States or Canada should contact their Toro Distributor (Dealer) to obtain guarantee policies for your country, province or state. If for any reason you are dissatisfied with your Distributor's service or have difficulty obtaining guarantee information, contact the TORO importer. If all other remedies fail, you may contact us at The Toro Company.

MAINTENANCE RECORD

Date								

Compliance with Radio Interference Regulations Certified.
Certifie Conforme au Reglement sur le Brouillage Radioelectrique.

Litho in U.S.A.
GG-95290