FORM NO. 3317–178

TORO®

MODEL NO. 21000BC–5900001 & UP

PARTS CATALOG

43cm REAR BAGGING MOWER

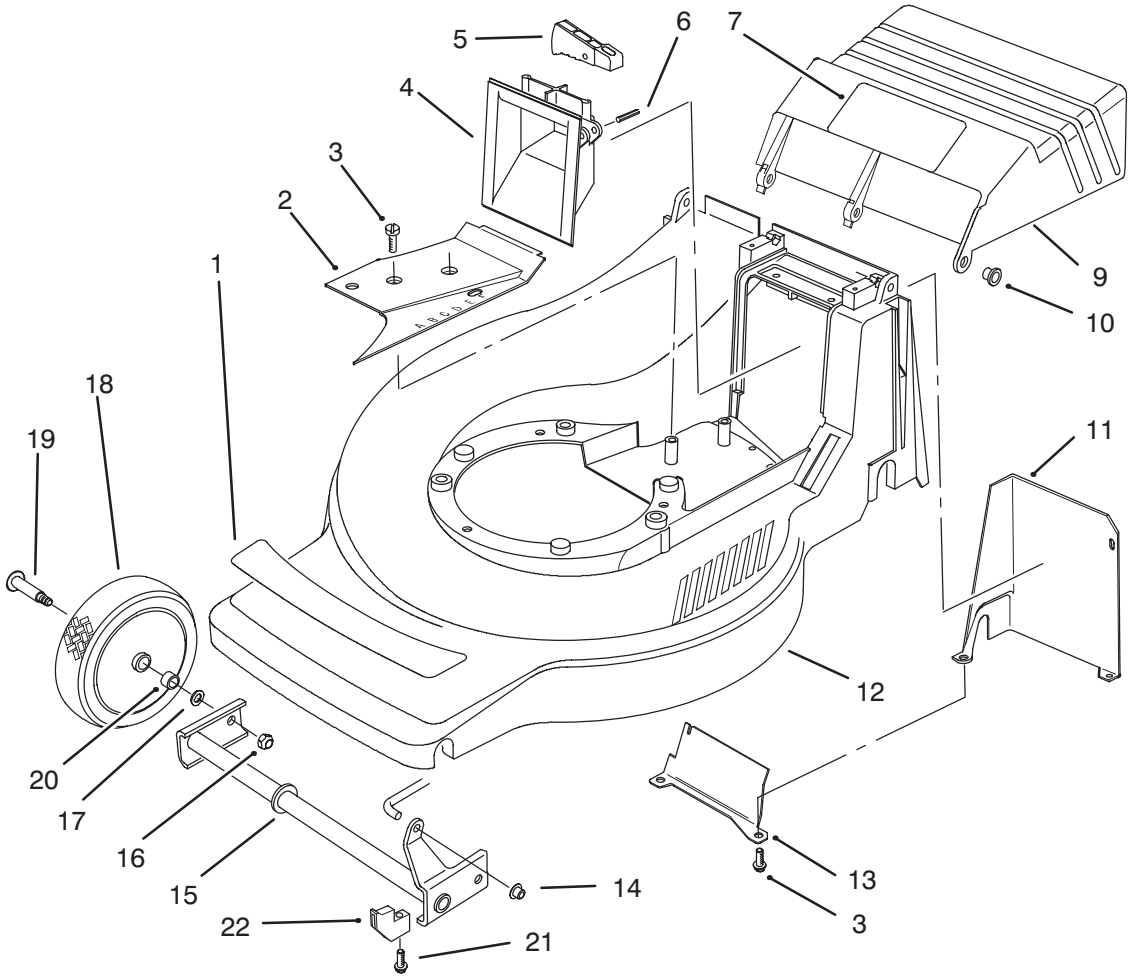

C–2113

HOUSING ASSEMBLY

Ref. No.	Part No.	Description	No. Used
1	93–7025	Decal – Deck	1
2	93–3782	Cover – Belt	1
3	93–4095	Screw – Tapping	5
4	71–7870	Grip – Lower	1
5	71–7930	Trigger – H.O.C.	1
6	3284–5	Pin – Groove	1
7	93–4105	Decal	1
9	93–4055	Door – Discharge	1
10	93–3794	Bushing	1
11	93–3781	Cover – Shield	1
12	93–4053	Housing – Deck	1

Ref. No.	Part No.	Description	No. Used
13	93–4110	Baffle	1
14	32112–11	Nut – Push	1
15	93–4080	Axle – Front	1
16	3296–6	Nut – Lock	2
17	40–1940	Washer	2
18	93–4081	Wheel & Tire Assembly 7”	2
19	27–6231	Bolt – Wheel	2
20	93–7024	Bushing	4
21	93–3793	Screw – Retainer	2
22	93–4064	Retainer – Axle	2

Copyright 1995 The Toro Company
All Rights Reserved

TPS

3317–178

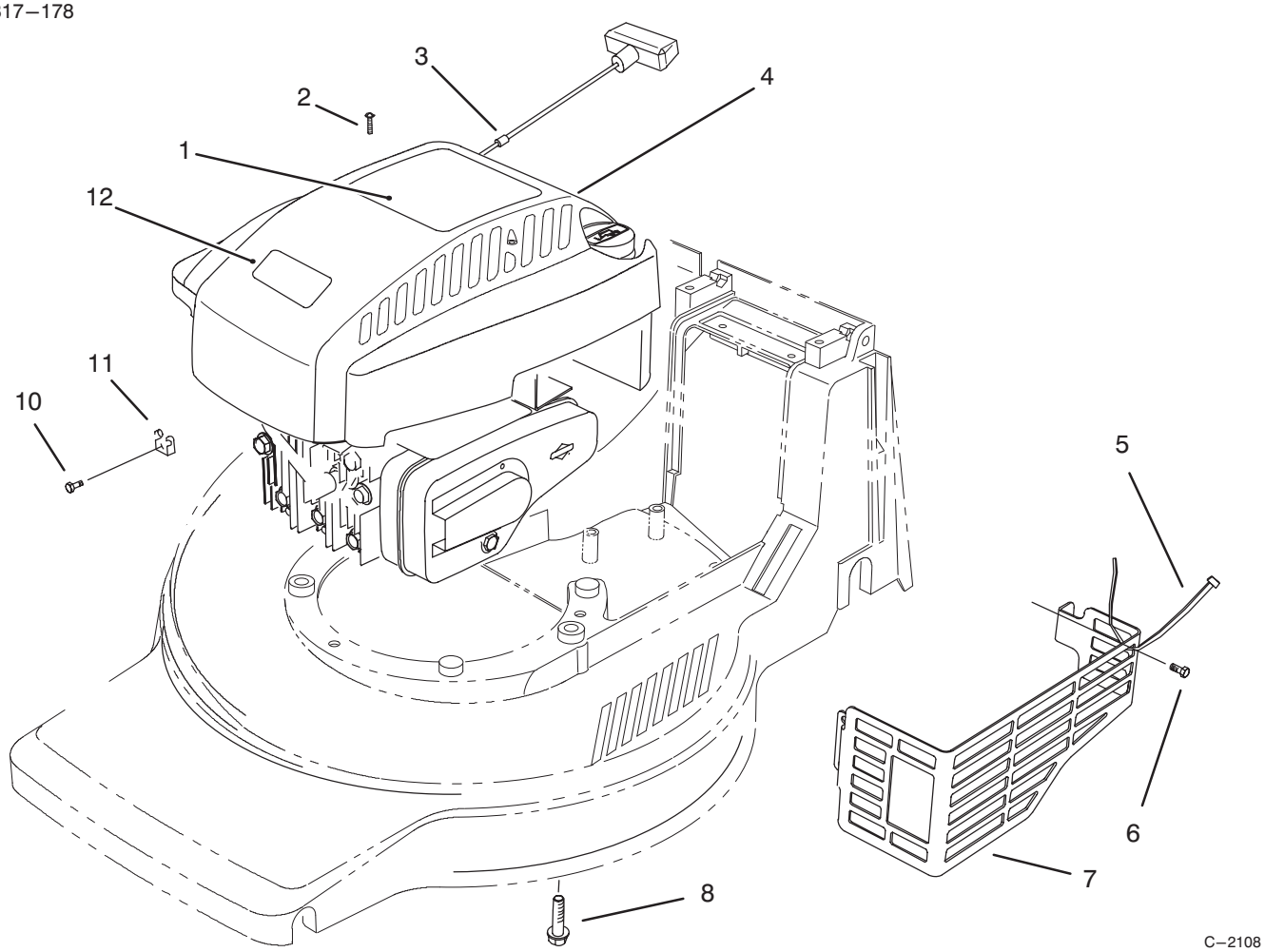

ENGINE ASSEMBLY

Ref. No.	Part No.	Description	No. Used
1	93–4352	Decal – Shroud	1
2	32144–121	Screw – Mounting	2
3	2210–316	Stop – Rope	1
4	93–0243	Shroud – Engine	1
5	3290–378	Tie – Cable	1
6	32144–73	Screw – Hex Washer Hd. Thread Forming	3

Ref. No.	Part No.	Description	No. Used
7	82–8550	Shield – Muffler	1
8	32144–102	Screw – Engine	3
10	93–8470	Screw – Clamp	1
11	2210–249	Clamp – Casing	1
12	92–2289	Plate – Logo Toro	1

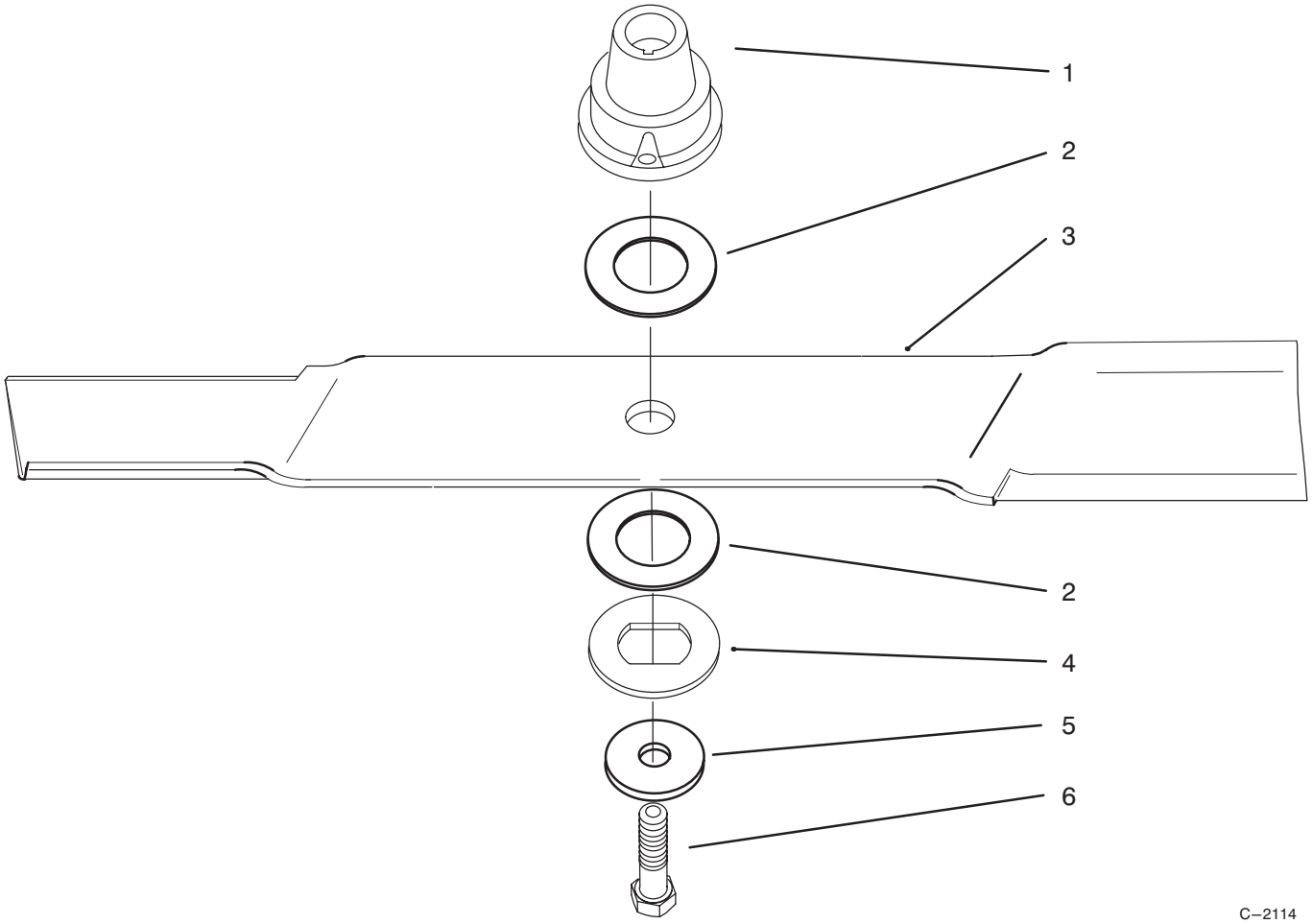

C–2114

BLADE ASSEMBLY

Ref. No.	Part No.	Description	No. Used
1	93–7017	Retainer – Blade	1
2	93–7016	Washer – Friction	2
3	93–4101	Blade – 43cm	1

Ref. No.	Part No.	Description	No. Used
4	93–7014	Washer – Pressure	1
5	93–7015	Washer – Spring	1
6	26–0670	Bolt – Blade	1

3317–178

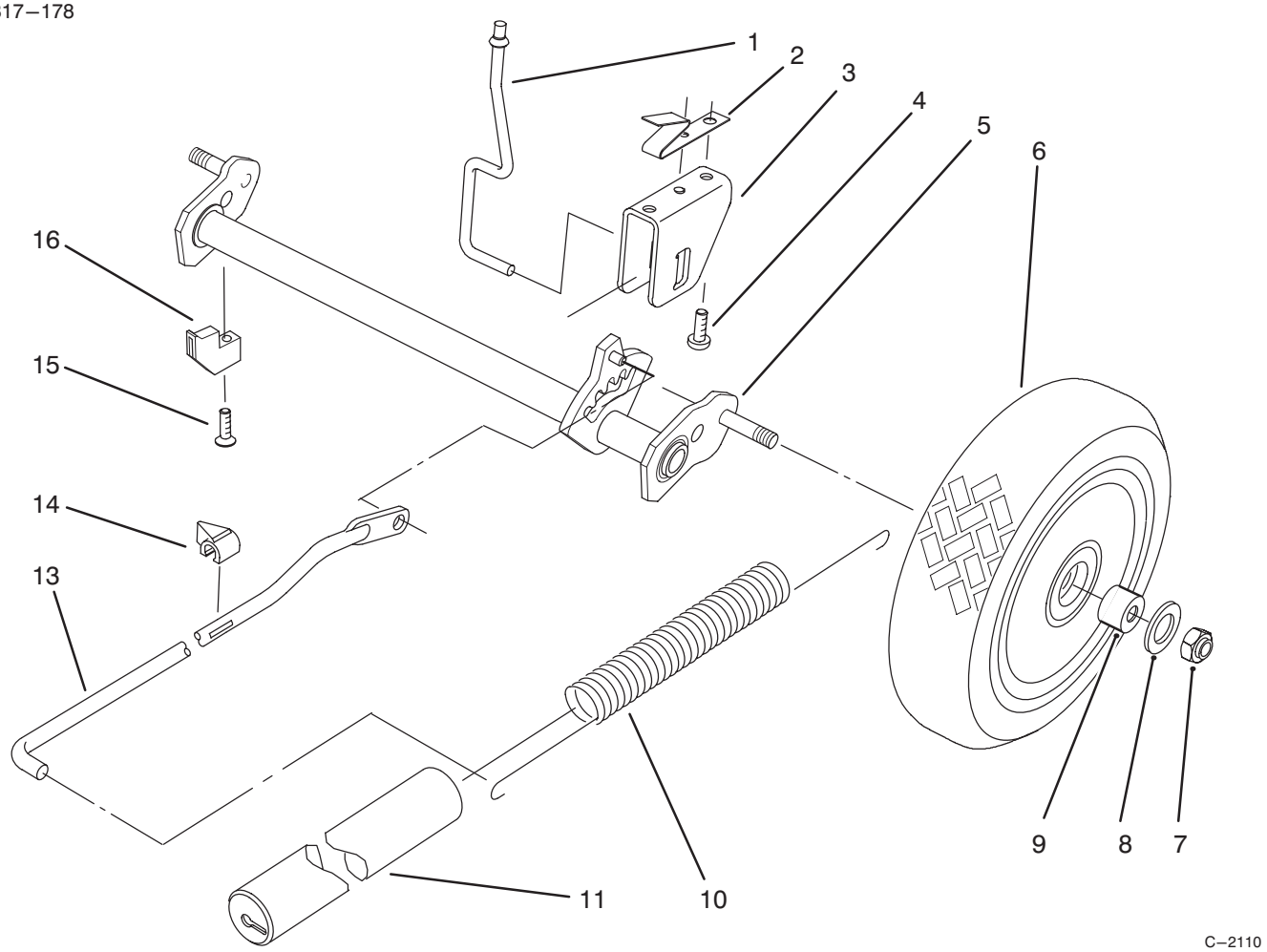

C–2110

REAR AXLE ASSEMBLY

Ref. No.	Part No.	Description	No. Used
1	93–4061	Rod – Trigger	1
2	93–4062	Spring – Trigger Ret.	1
3	93–4066	Saddle – H.O.C.	1
4	93–4095	Screw	2
5	93–4079	Axle – Rear	1
6	93–8492	Wheel & Tire Assembly	2
7	93–4098	Nut – Lock	2
8	93–4097	Washer – Wheel	2

Ref. No.	Part No.	Description	No. Used
9	93–7023	Bushing	4
10	71–7740	Spring – Counterbalance	1
11	71–8450	Cover – Spring	1
13	93–4065	Rod – Link	1
14	71–7980	Indicator – H.O.C.	1
15	93–3793	Screw – Retainer	2
16	93–4064	Retainer – Axle	2

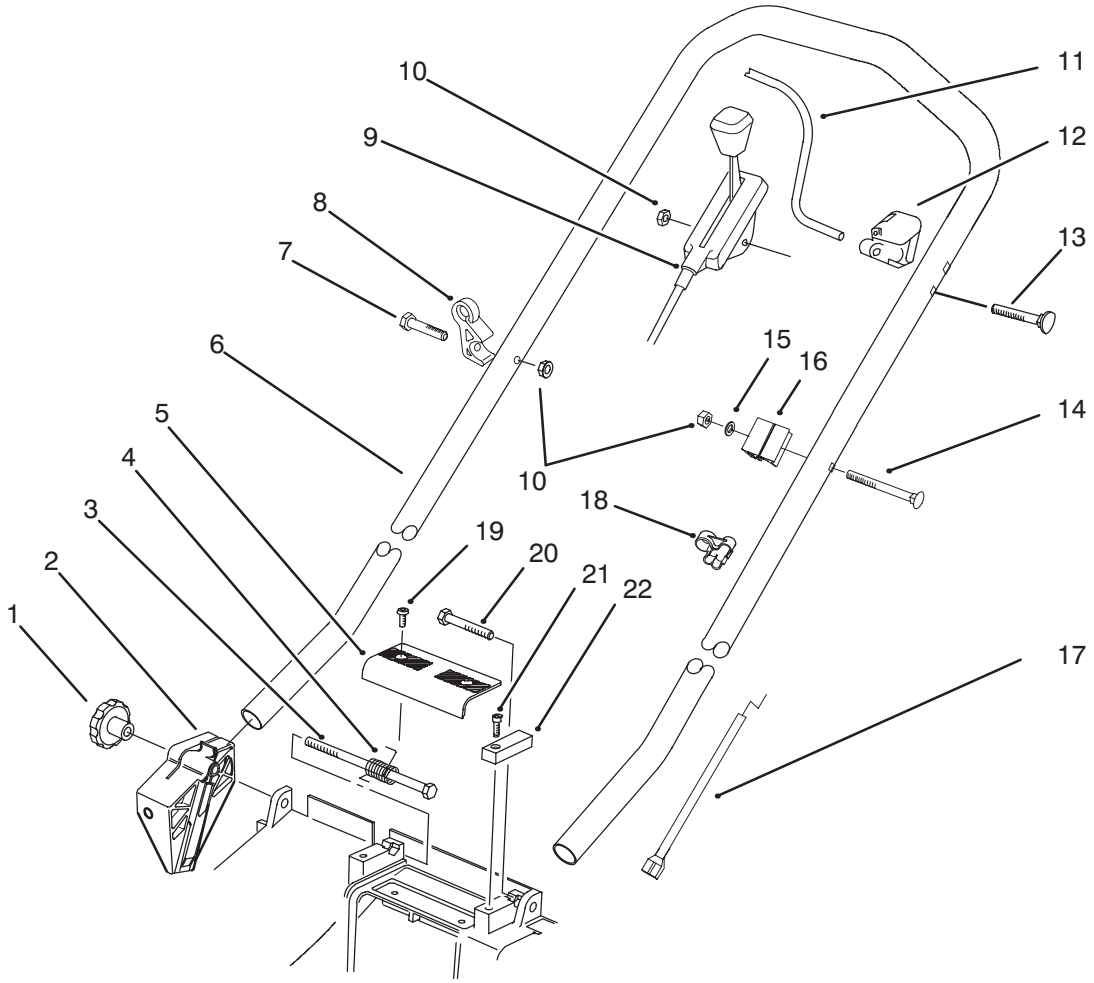

C–2111

HANDLE ASSEMBLY

Ref. No.	Part No.	Description	No. Used
1	19–4050	Knob	2
2	93–4082	Mount – Handle R.H.	1
*	93–4083	Mount – Handle L.H.	1
3	93–4058	Screw	1
4	93–4057	Spring	1
5	71–7860	Grip – Upper	1
6	93–4089	Handle	1
7	321–52	Screw	1
8	93–3772	Guide – Rope	1
9	93–1118	Control – Throttle	1
10	3296–73	Nut – Lock	3
11	93–0336	Bail – Control	1

Ref. No.	Part No.	Description	No. Used
12	93–5412	Stop – Pivot	1
13	92–2266	Screw – Handle	1
14	92–2270	Screw – Handle	1
15	3256–1	Washer – Flat	1
16	46–6980	Support – Cable	1
17	93–1116	Cable – Brake	1
18	93–4084	Clamp – Cable	2
19	32144–97	Screw	2
20	93–4060	Screw	1
21	93–4094	Screw – Hinge, Cap	2
22	93–4056	Cap	2

*Not Illustrated

3317–178

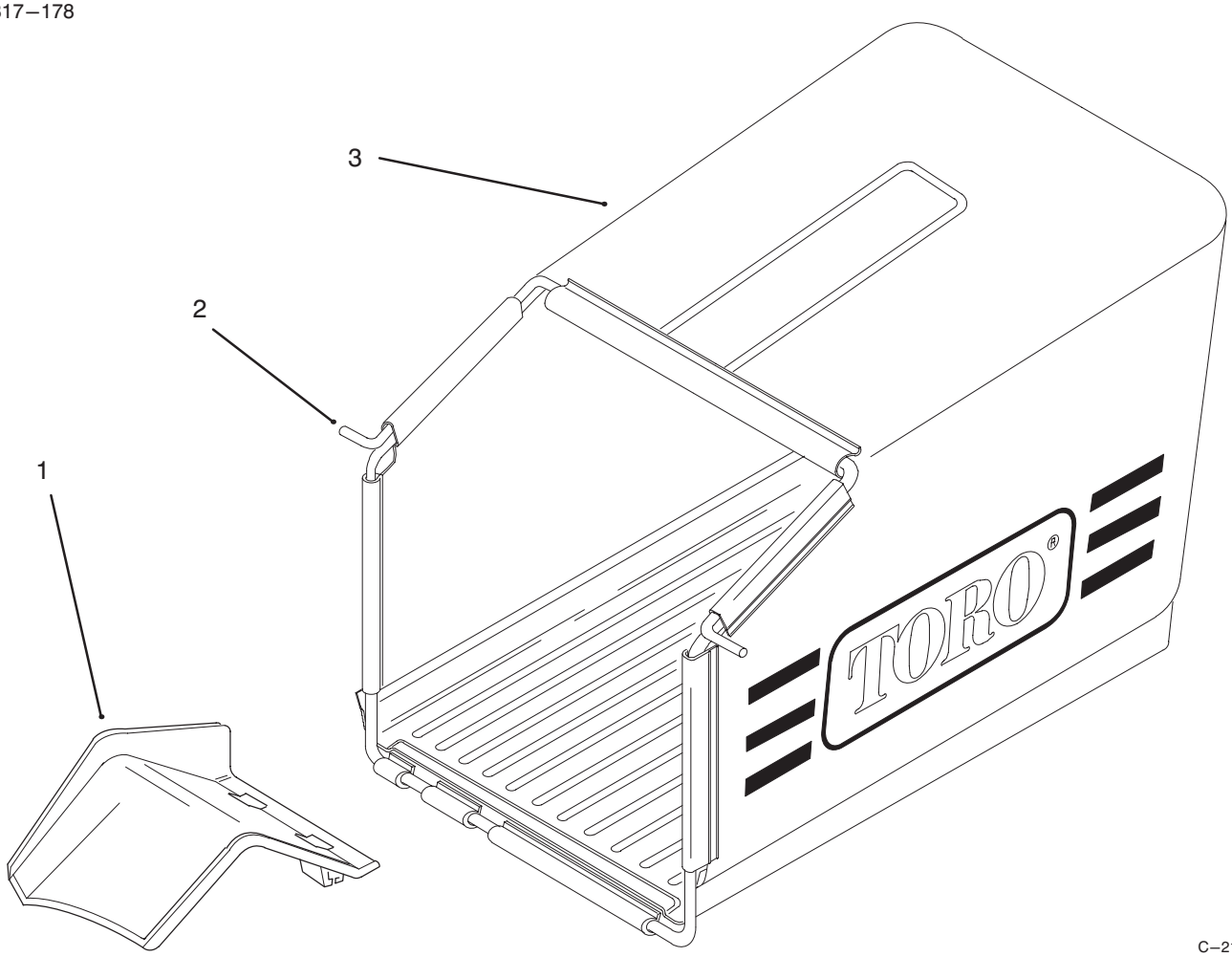

C–2112

GRASS BAG ASSEMBLY

Ref. No.	Part No.	Description	No. Used
1	93–4087	Grass Bag Remover	1
2	93–4085	Frame – Bag	1

Ref. No.	Part No.	Description	No. Used
3	93–4086	Bag – Grass	1

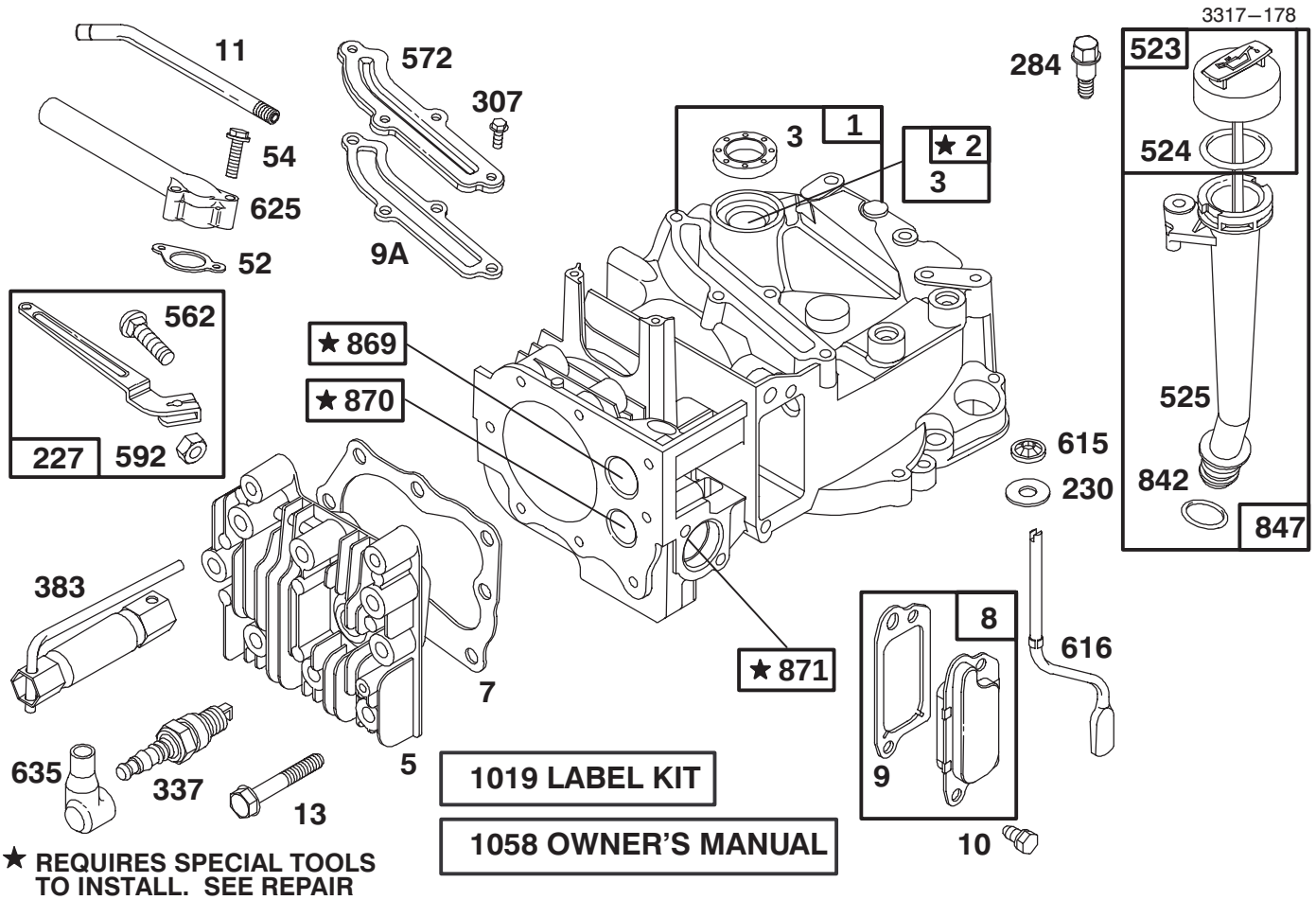

★ REQUIRES SPECIAL TOOLS TO INSTALL. SEE REPAIR INSTRUCTION MANUAL.

Assemblies include all parts shown in frames.

ENGINE BRIGGS & STRATTON MODEL 12E802–0653–01

Ref. No.	Part No.	Description	No. Used
1	493260	Cylinder Assembly	1
2	293708	Bushing – Cylinder	1
★3	299819	Seal – Oil	1
5	214349	Head – Cylinder	1
★7	272916	Gasket – Cylinder Head	1
8	495786	Breather Assembly	1
★9	272481	Gasket – Valve Cover	1
★9A	272238	Gasket – Baffle Plate	1
10	94650	Screw – Breather Mtg.	1
11	231933	Tube – Breather	1
13	94547	Screw – Cylinder Head	1
★52	272199	Gasket – Intake Elbow	1
54	94526	Screw – Intake Elbow Mtg.	1
227	492349	Lever Assembly – Gov.	1
230	67072	Washer – Gov. Crank	1
284	94511	Screw – Hex. Head	1
337	802592	Plug – Spark	1
383	89838	Wrench – Spark Plug	1
523	495264	Cap w/ Dipstick–Oil Filler	1

Ref. No.	Part No.	Description	No. Used
★524	280393	Seal – Filler Tube	1
525	495265	Tube – Oil Filler	1
562	92613	Bolt – Governor Lever	1
572	224328	Baffle – Cylinder	1
592	231082	Nut – Hex.	1
615	94474	Fastener	1
616	262578	Crank – Governor	1
625	281085	Tube – Fuel Intake	1
635	66538	Elbow – Spark Plug	1
★842	280966	Seal – O-Ring	1
847	495263	Oil Fill Tube and Dipstick Assy.	1
869	213512	Seat – Intake Valve	1
870	213513	Seat – Exhaust Valve	1
871	262001	Guide – Exhaust Valve **Note:** 63709 Guide – Intake Valve	1
1019	494256	Label Kit	1
1058	272262	Owner's Manual	1

★ Included in Gasket Set–Part No. 497316.

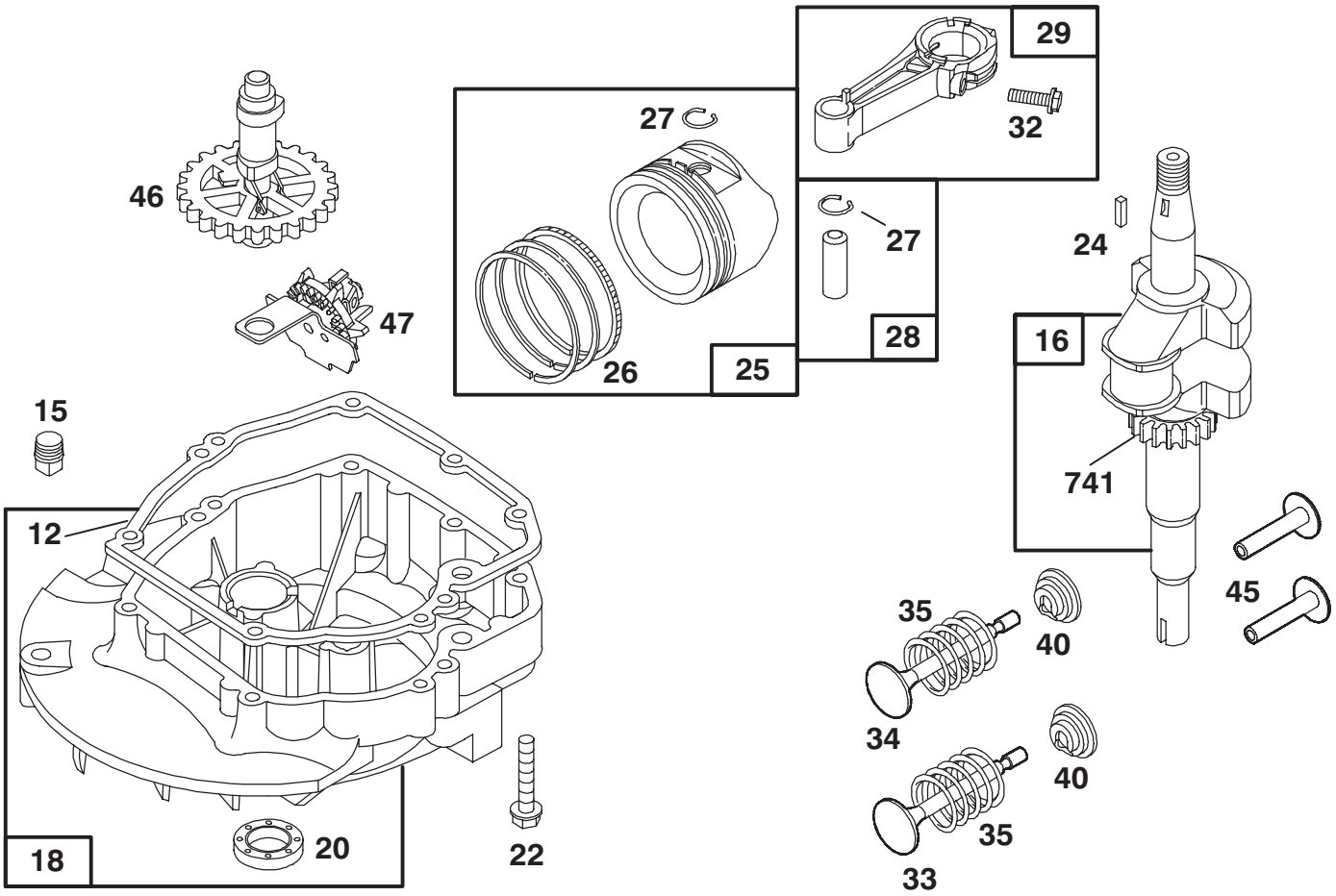

Assemblies include all parts shown in frames.

ENGINE BRIGGS & STRATTON MODEL 12E802—0653—01

Ref. No.	Part No.	Description	No. Used
★12	272198	Gasket — Crankcase	1
15	94720	Plug — Oil Drain	1
16	494546	Crankshaft **Note:** Order 94388 For Timing Gear Key.	1
18	493279	Sump — Engine	1
★20	399781	Seal — Oil	1
22	94220	Screw — Hex. Head **Note:** 94612 Screw — Hex. Head (One (1) Used in Hole Nearest Breather.)	1
24	222698	Key — Flywheel	1
25	493262	Piston Assy. (Standard)	1
	493385	Piston Assy. (.010” O.S.)	1
	493386	Piston Assy. (.020” O.S.)	1
	493387	Piston Assy. (.030” O.S.)	1
26	493261	Ring Set (Standard)	1
	493388	Ring Set (.010” O.S.)	1
	493389	Ring Set (.020” O.S.)	1
	493390	Ring Set (.030” O.S.)	1
27	26026	Lock — Piston Pin	1
28	298909	Pin — Piston (Standard)	1
	298908	Pin — Piston (.005” O.S.)	1
29	490566	Rod Assy. — Connecting **Note:** For Connecting Rod With .020” Undersize Crankpin Bearing — Order No. 490743	1
32	94699	Screw — Connecting Rod	1
33	262651	Valve — Exhaust	1
34	262652	Valve — Intake	1
35	262224	Spring — Valve	2
40	93312	Retainer — Valve Spring	2
45	262204	Tappet — Valve	2
46	492828	Gear — Cam	1
47	493737	Slinger — Oil	1
741	262598	Gear — Timing	1

★ Included in Gasket Set—Part No. 497316.

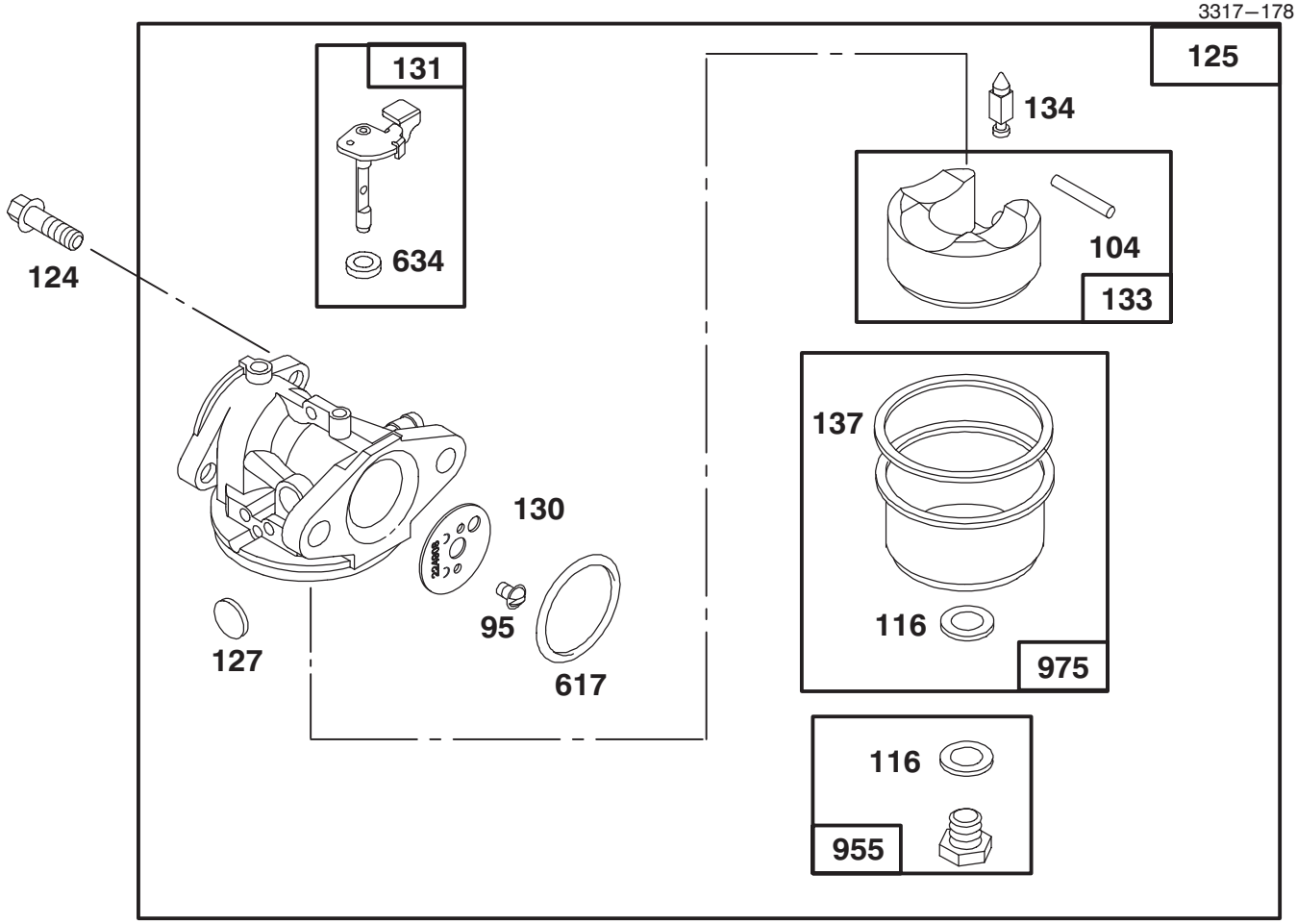

Assemblies include all parts shown in frames.

ENGINE BRIGGS & STRATTON MODEL 12E802–0653–01

Ref. No.	Part No.	Description	No. Used
95	94098	Screw – Throttle Valve Mounting	1
●104	231371	Pin – Float Hinge	1
●◆116		Gasket – Sealing (Sold in Kit Only).	1
124	94525	Screw – Carburetor Mtg.	2
125	497314	Carburetor	1
●127		Plug – Welch (Sold in Kit Only).	1
130	224908	Valve – Throttle	1
131	493267	Shaft – Throttle	1
133	398187	Float Assy. – Carburetor	1

Ref. No.	Part No.	Description	No. Used
●134	398188	Valve – Inlet (Includes Seat)	1
●◆137		Gasket – Bowl (Sold in Kit Only).	1
●◆617	270344	Seal – Fuel Intake Tube	1
●◆634		Washer – Shaft (Sold in Kit Only).	1
955	497315	Screw – Bowl Mtg. (Std.) **Note:** 496495 Screw – Bowl Mtg. (High Altitude)	1
975	493640	Bowl Assy. – Carburetor	1

●Included in Carburetor Kit–Part No. 493762.
◆Included in Carburetor Gasket Set–Part No. 490937.

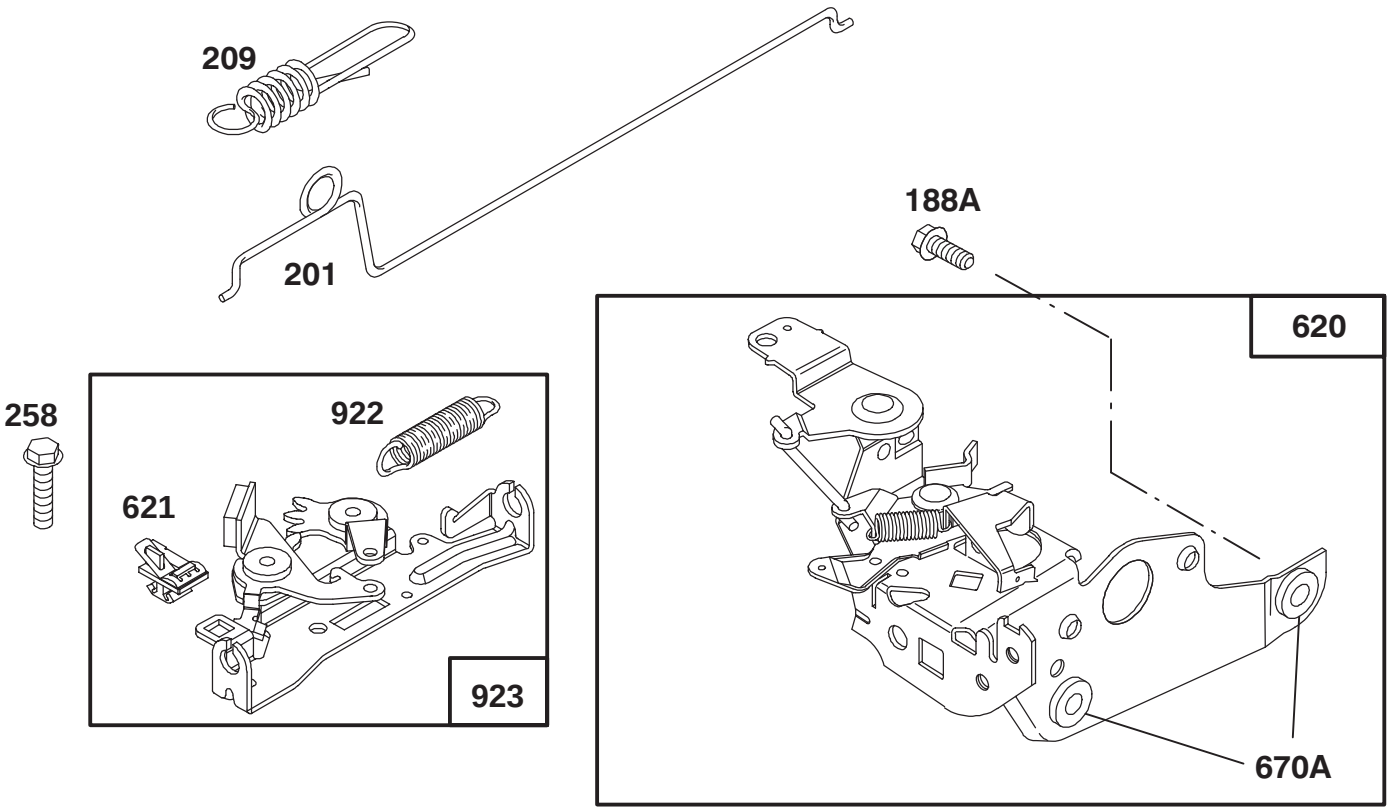

Assemblies include all parts shown in frames.

ENGINE BRIGGS & STRATTON MODEL 12E802—0653—01

Ref. No.	Part No.	Description	No. Used
188A	94644	Screw — Hex. Head	2
201	262579	Link — Governor	1
209	263045	Spring — Governor	1
258	94512	Screw — Hex. Head	1
620	497203	Bracket — Carburetor	1

Ref. No.	Part No.	Description	No. Used
621	396847	Switch — Stop	1
★670A	493823	Spacer — Bracket	2
922	262640	Spring — Brake	1
923	493442	Brake Assembly	1

★ Included in Gasket Set—Part No. 497316.

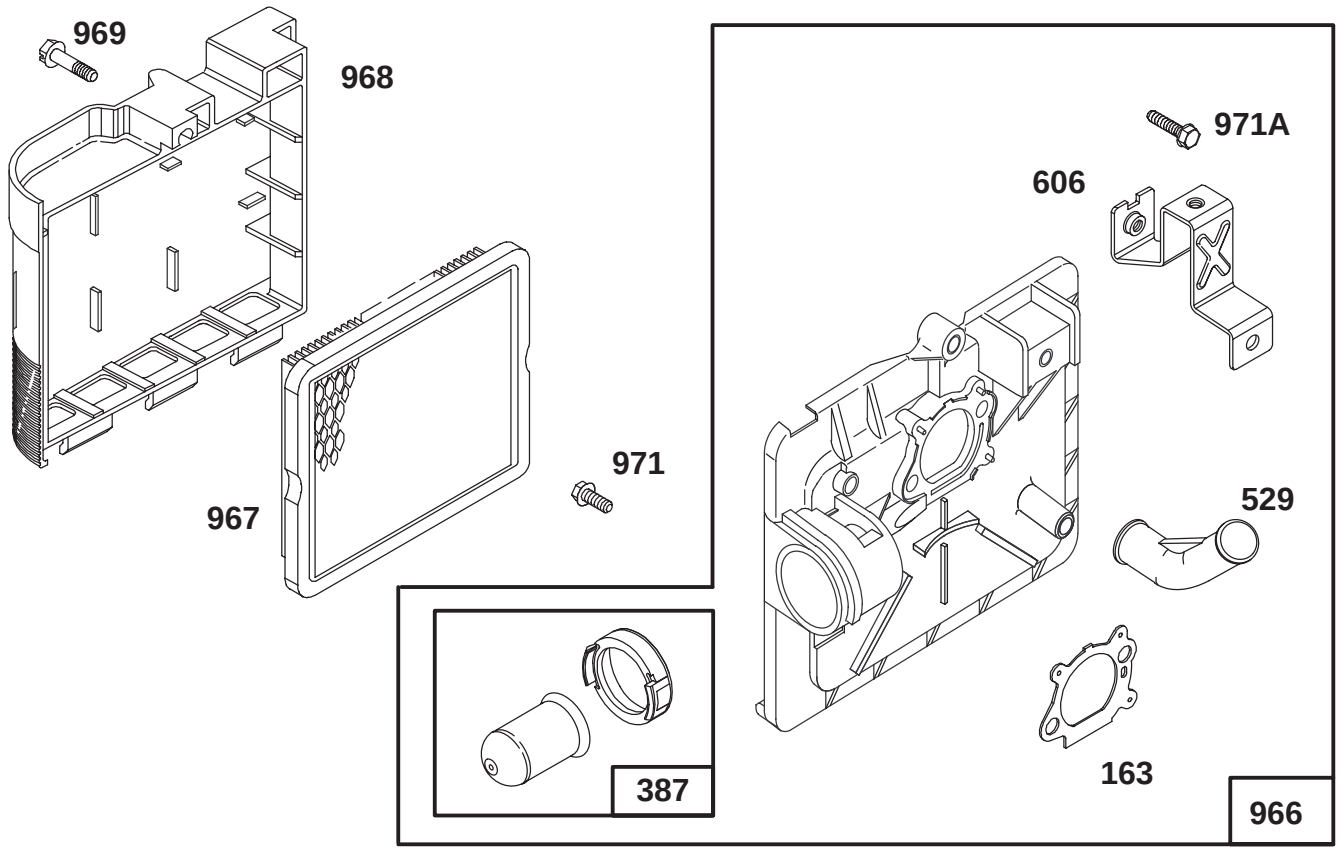

Assemblies include all parts shown in frames.

ENGINE BRIGGS & STRATTON MODEL 12E802—0653—01

Ref. No.	Part No.	Description	No. Used
★163	272653	Gasket — Air Cleaner	1
387	496115	Primer—Carburetor	1
529	281299	Grommet — Breather	1
606	224815	Strap — Bracket	1
966	496116	Base — Air Cleaner	1

Ref. No.	Part No.	Description	No. Used
967	491588	Filter — Air	1
968	281340	Cover — Air Cleaner	1
969	94120	Screw — Cover Mtg.	1
971	94121	Screw — Air Cleaner	1
971A	94749	Screw — Hex. Head	1

★ Included in Gasket Set—Part No. 497316.

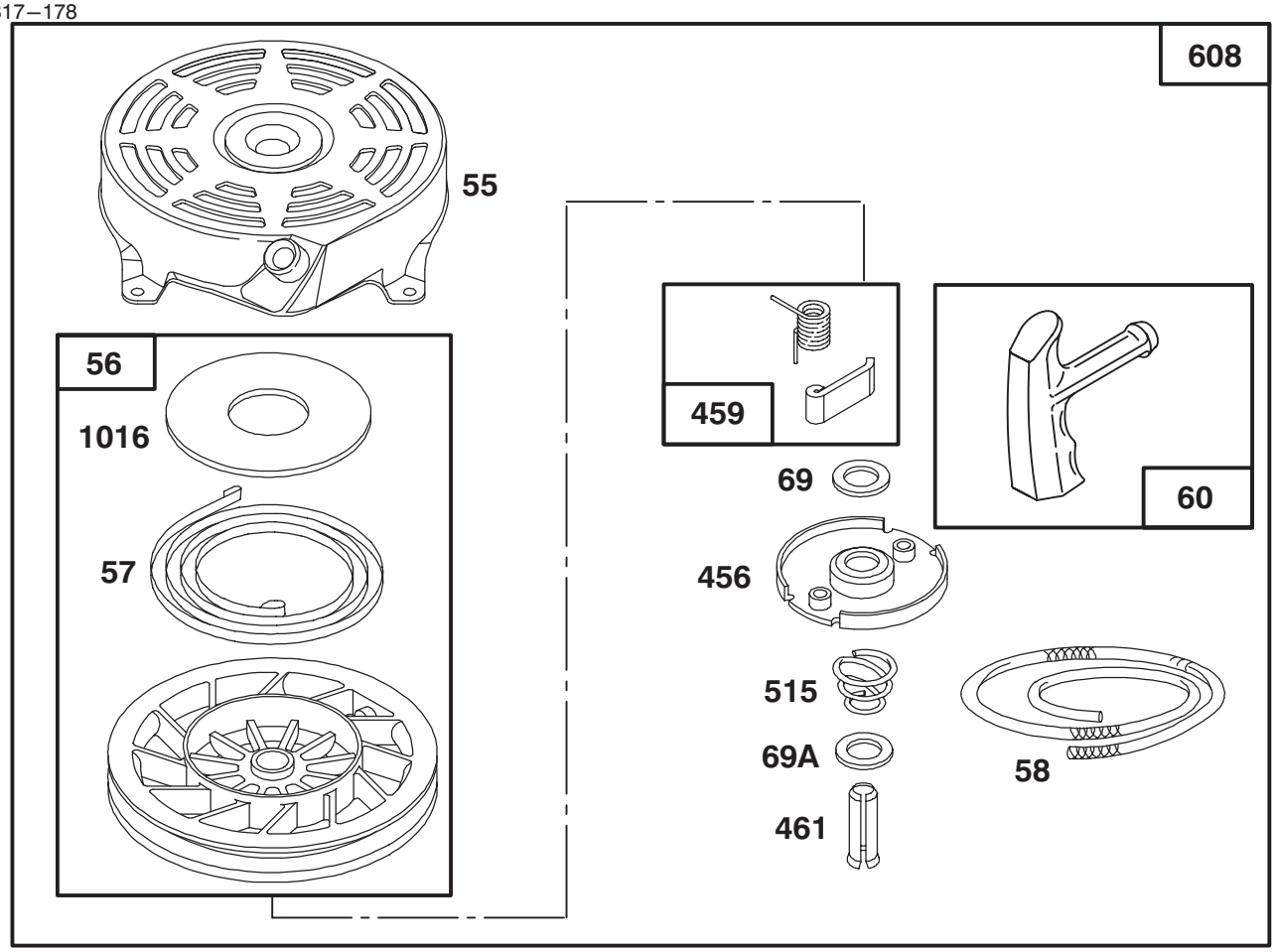

Assemblies include all parts shown in frames.

ENGINE BRIGGS & STRATTON MODEL 12E802—0653—01

Ref. No.	Part No.	Description	No. Used
55	492831	Housing — Rewind Starter	1
56	493824	Pulley — Rewind Starter	1
57	262594	Spring — Rewind Starter	1
58	280399	Rope — Rewind Starter	1
60	393152	Handle — Rewind Starter	1
69	280973	Washer — Rewind Starter	1
69A	224322	Washer — Rewind Starter	1
456	224321	Retainer — Rewind Starter	1

Ref. No.	Part No.	Description	No. Used
459	492833	Pawl — Starter	1
461	262626	Pin — Starter	1
515	262625	Spring — Torsion	1
608	493295	Starter Assy. — Rewind	1
		Includes:	
		94128 Screw — Hex. Head	
		92987 Nut — Hex.	
1016	224278	Cover — Rewind Starter	1

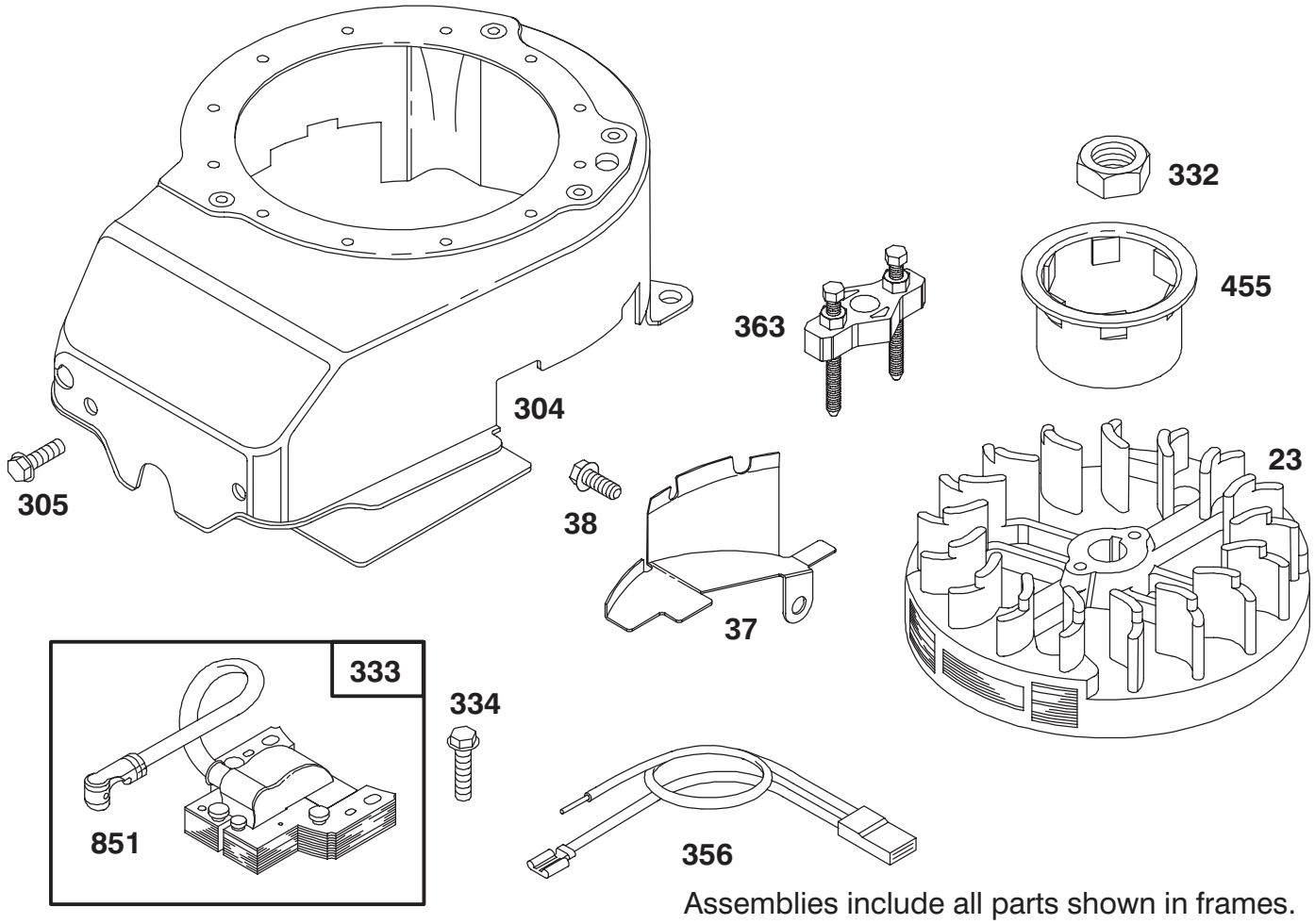

Assemblies include all parts shown in frames.

ENGINE BRIGGS & STRATTON MODEL 12E802—0653—01

Ref. No.	Part No.	Description	No. Used
23	492177	Flywheel	1
37	224511	Guard — Flywheel	1
38	94608	Screw — Hex. Hd.	1
304	493293	Housing — Blower	1
305	94513	Screw — Sem	2
332	92284	Nut — Flywheel	1

Ref. No.	Part No.	Description	No. Used
333	802574	Armature — Magneto	1
334	94731	Screw — Sem	2
356	398808	Wire — Ground	1
363	19069	Puller — Flywheel	1
455	224250	Cup — Starter	1
851	493880	Terminal — Ignition Cable	1

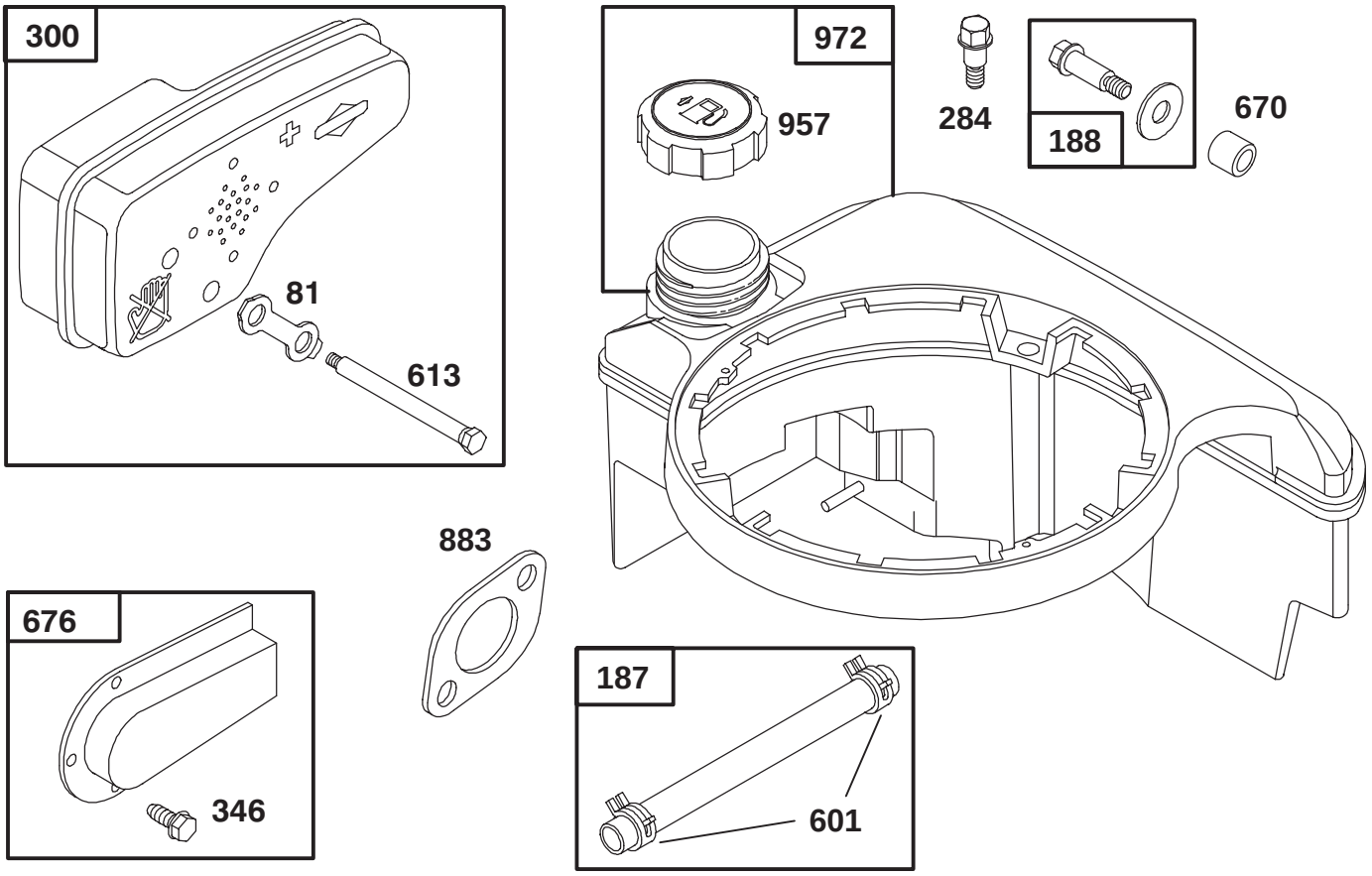

Assemblies include all parts shown in frames.

ENGINE BRIGGS & STRATTON MODEL 12E802—0653—01

Ref. No.	Part No.	Description	No. Used
81	223664	Lock — Muffler Screw	1
187	492790	Hose — Fuel	1
188	398540	Screw — Tank Mounting	4
284	94511	Screw — Hex. Head	2
300	490547	Muffler — Exhaust	1
346	93705	Screw — Hex. Head	3
601	93807	Clamp — Hose	1

Ref. No.	Part No.	Description	No. Used
613	94231	Screw — Muffler Mtg.	2
670	280512	Spacer — Fuel Tank	4
676	493871	Deflector — Muffler	1
★883	272253	Gasket—Muffler	1
957	397974	Cap Assy. — Fuel	1
972	495224	Tank Assembly — Fuel	1

★ Included in Gasket Set—Part No. 497316.

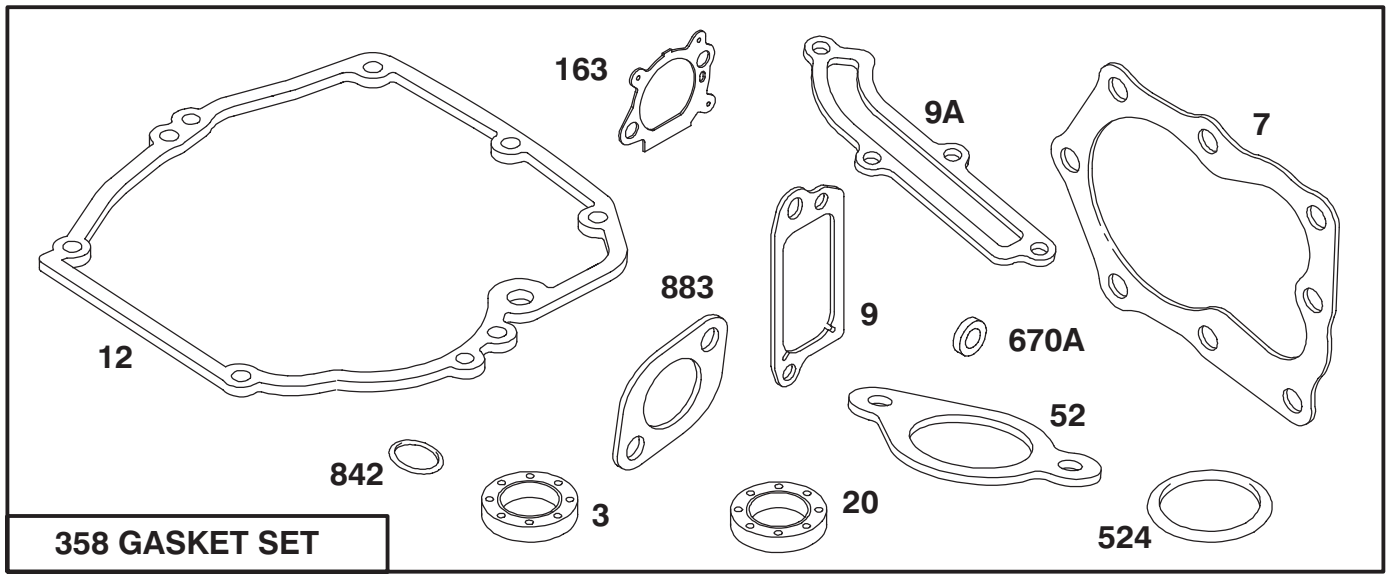

358 GASKET SET

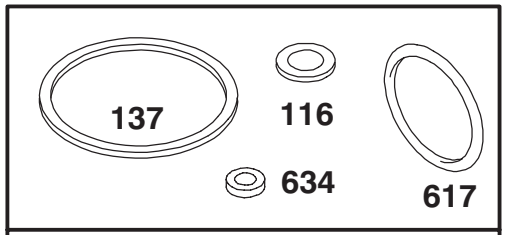

977 CARBURETOR GASKET SET

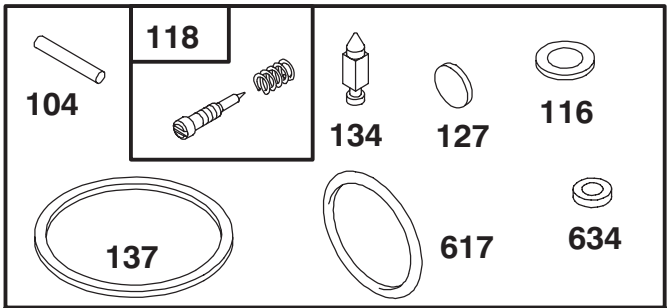

121 CARBURETOR KIT

Assemblies include all parts shown in frames.

ENGINE BRIGGS & STRATTON MODEL 12E802—0653—01

Ref. No.	Part No.	Description	No. Used
★3	299819	Seal — Oil	1
★7	272916	Gasket — Cylinder Hd.	1
★9	272481	Gasket — Valve Cover	1
★9A	272238	Gasket — Baffle Plate	1
★12	272198	Gasket — Crankcase	1
★20	399781	Seal — Oil	1
★52	272199	Gasket — Intake Elbow	1
●104	231371	Pin — Float Hinge	1
●◆116		Gasket — Sealing (Sold in Kit Only).	1
●118	493765	Valve — Needle	1
121	493762	Carburetor Kit	1
●127		Plug — Welch (Sold in Kit Only)	1
●134	398188	Valve — Inlet (Includes Seat)	1
●◆137		Gasket — Bowl (Sold in Kit Only)	1
★163	272653	Gasket — Air Cleaner	1
358	497316	Gasket Set	1
★524	280393	Seal — Filler Tube	1
●◆617	270344	Seal — Fuel Intake Tube	1
●◆634		Washer — Shaft (Sold in Kit Only)	1
★670A	493823	Spacer — Bracket (Includes 2)	1
★842	280966	Seal — O-Ring	1
★883	272253	Gasket—Muffler	1
977	490937	Gasket Set — Carburetor	1

●Included in Carburetor Kit—Part No. 493762.
◆Included in Carburetor Gasket Set—Part No. 490937.
★ Included in Gasket Set—Part No. 497316.

TORO PART NUMBER INDEX

Part No.	Description	Pg. No.	Ref. No.	Qty.
19–4050	Knob	5	1	2
26–0670	Bolt – Blade	3	6	1
27–6231	Bolt – Wheel	1	19	2
40–1940	Washer	1	17	2
46–6980	Support – Cable	5	16	1
71–7740	Spring – Counterbalance	4	10	1
71–7860	Grip – Upper	5	5	1
71–7870	Grip – Lower	1	4	1
71–7930	Trigger – H.O.C.	1	5	1
71–7980	Indicator – H.O.C.	4	14	1
71–8450	Cover – Spring	4	11	1
82–8550	Shield – Muffler	2	7	1
92–2266	Screw – Handle	5	13	1
92–2270	Screw – Handle	5	14	1
92–2289	Plate – Logo Toro	2	12	1
93–0243	Shroud – Engine	2	4	1
93–0336	Bail – Control	5	11	1
93–1116	Cable – Brake	5	17	1
93–1118	Control – Throttle	5	9	1
93–3772	Guide – Rope	5	8	1
93–3781	Cover – Shield	1	11	1
93–3782	Cover – Belt	1	2	1
93–3793	Screw – Retainer	1	21	2
93–3793	Screw – Retainer	4	15	2
93–3794	Bushing	1	10	1
93–4053	Housing – Deck	1	12	1
93–4055	Door – Discharge	1	9	1
93–4056	Cap	5	22	2
93–4057	Spring	5	4	1
93–4058	Screw	5	3	1
93–4060	Screw	5	20	1
93–4061	Rod – Trigger	4	1	1
93–4062	Spring – Trigger Ret.	4	2	1
93–4064	Retainer – Axle	1	22	2
93–4064	Retainer – Axle	4	16	2
93–4065	Rod – Link	4	13	1
93–4066	Saddle – H.O.C.	4	3	1
93–4079	Axle – Rear	4	5	1
93–4080	Axle – Front	1	15	1
93–4081	Wheel & Tire Assembly 7	1	18	2
93–4082	Mount – Handle R.H.	5	2	1
93–4083	Mount – Handle L.H.	5	*	1
93–4084	Clamp – Cable	5	18	2
93–4085	Frame – Bag	6	2	1
93–4086	Bag – Grass	6	3	1
93–4087	Grass Bag Remover	6	1	1
93–4089	Handle	5	6	1
93–4094	Screw – Cap Hinge	5	21	2
93–4094	Screw – Cap Hinge	1	21	2
93–4095	Screw	4	4	2
93–4095	Screw – Tapping	1	3	5
93–4097	Washer – Wheel	4	8	2
93–4098	Nut – Lock	4	7	2
93–4101	Blade – 43cm	3	3	1
93–4105	Decal	1	7	1
93–4110	Baffle	1	13	1
93–4352	Decal – Shroud	2	1	1
93–5412	Stop – Pivot	5	12	1
93–7014	Washer – Pressure	3	4	1
93–7015	Washer – Spring	3	5	1
93–7016	Washer – Friction	3	2	2
93–7017	Retainer – Blade	3	1	1
93–7023	Bushing	4	9	4
93–7024	Bushing	1	20	4
93–7025	Decal – Deck	1	1	1
93–8470	Screw – Clamp	2	10	1
93–8492	Wheel & Tire Assembly	4	6	2
2210–249	Clamp – Casing	2	11	1
2210–316	Stop – Rope	2	3	1
321–52	Screw	5	7	1
3256–1	Washer – Flat	5	15	1
3284–5	Pin – Groove	1	6	1
3290–378	Tie – Cable	2	5	1
3296–6	Nut – Lock	1	16	2
3296–73	Nut – Lock	5	10	3
32112–11	Nut – Push	1	14	1
32144–73	Screw – Hex Washer Hd.	2	6	3
32144–97	Screw	5	19	2
32144–102	Screw – Engine	2	8	3
32144–121	Screw – Mounting	2	2	2

*Not Illustrated