FORM NO. 3317–285

TORO®

MODEL NO. 20766BC–5900001 & UP

PARTS CATALOG

21" RECYCLER®
Mower

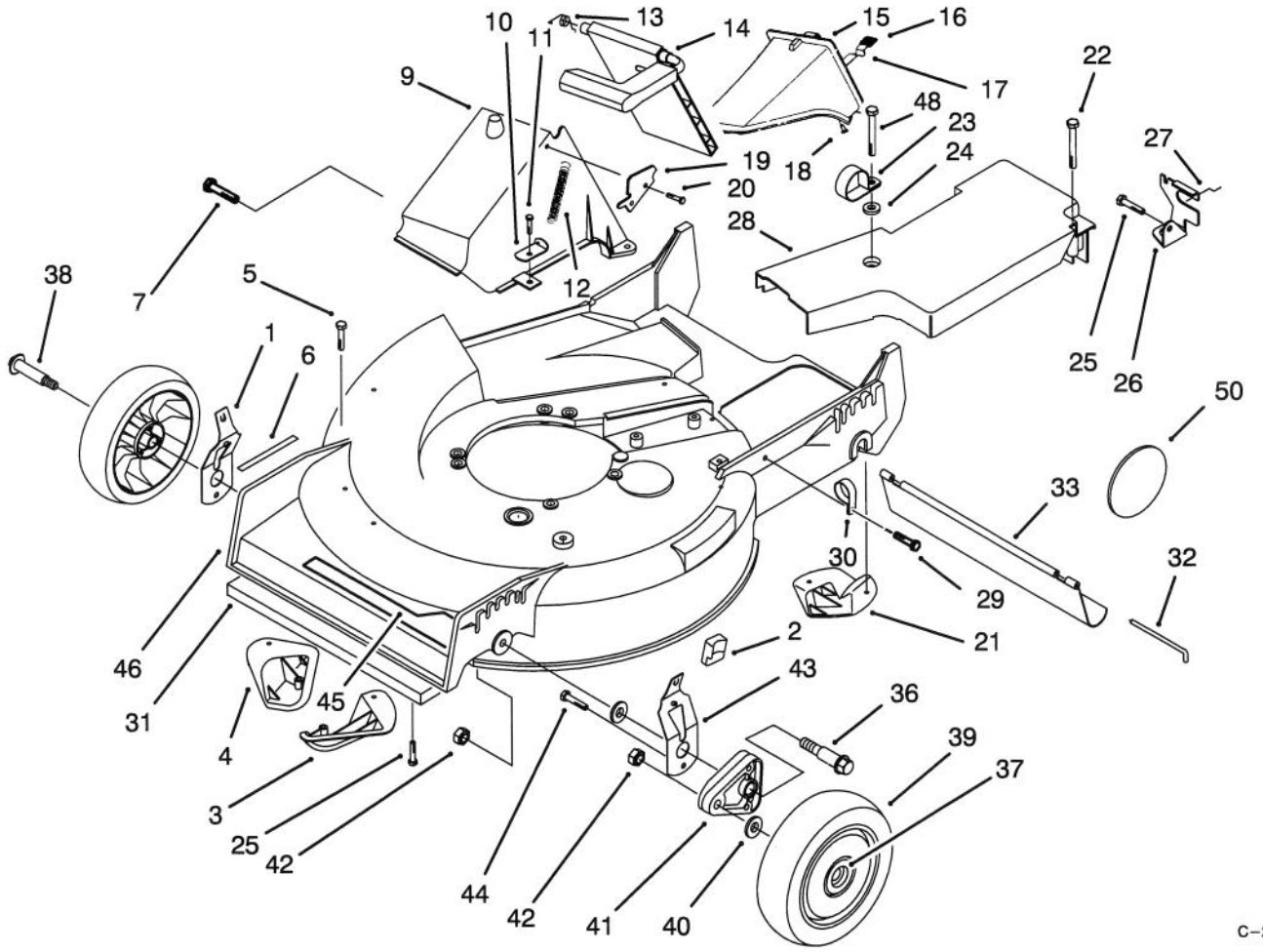

C–2135

HOUSING ASSEMBLY

Ref. No.	Part No.	Description	No. Used
1	71–0560	Spring Arm Ass'y R.H.	1
2	25–7740	Knob – Arm	2
3	92–1720	Plate – Kicker Right Front	1
4	92–1730	Plate – Kicker Left Front	1
5	32144–111	Screw – Plastite	6
6	92–7856	Decal – H.O.C.	4
7	46–6810	Screw & Washer Assembly	1
9	82–9151	Tunnel – Discharge	1
10	71–9350	Bracket – Spring	1
11	46–6811	Screw & Washer Assembly	3
12	76–4660	Spring – Door	1
13	80–3770	Retainer – Door	1
14	77–0200	Door Assembly	1
15	77–0502	Discharge Plug Assembly (Incl. Ref. #16–18)	1
16	76–4650	Grip – Latch	1
17	76–4640	Latch – Plate	1

Ref. No.	Part No.	Description	No. Used
18	3295–35	Rivet	1
19	76–4570	Plate – Latch	1
20	46–8090	Screw – Tapping	2
21	92–1750	Plate – Kicker Left Rear	1
22	37–7260	Screw – Hex Hd. Tapping	1
23	2412–87	Clamp – Cable	1
24	3–5792	Washer	1
25	32144–70	Screw – Thread Forming Hex Washer Hd.	5
26	82–5680	Bracket – Traction Adj.	1
27	46–7030	Retainer – Cable	1
28	82–9910	Cover – Belt	1
29	32144–112	Screw – Self Tapping	1
30	2412–83	R–Clamp	1
31	46–5400	Shield – Front	1
32	33–3208	Rod – Shield	1

© The TORO Company – 1994
All Rights Reserved

TPS

3317–285

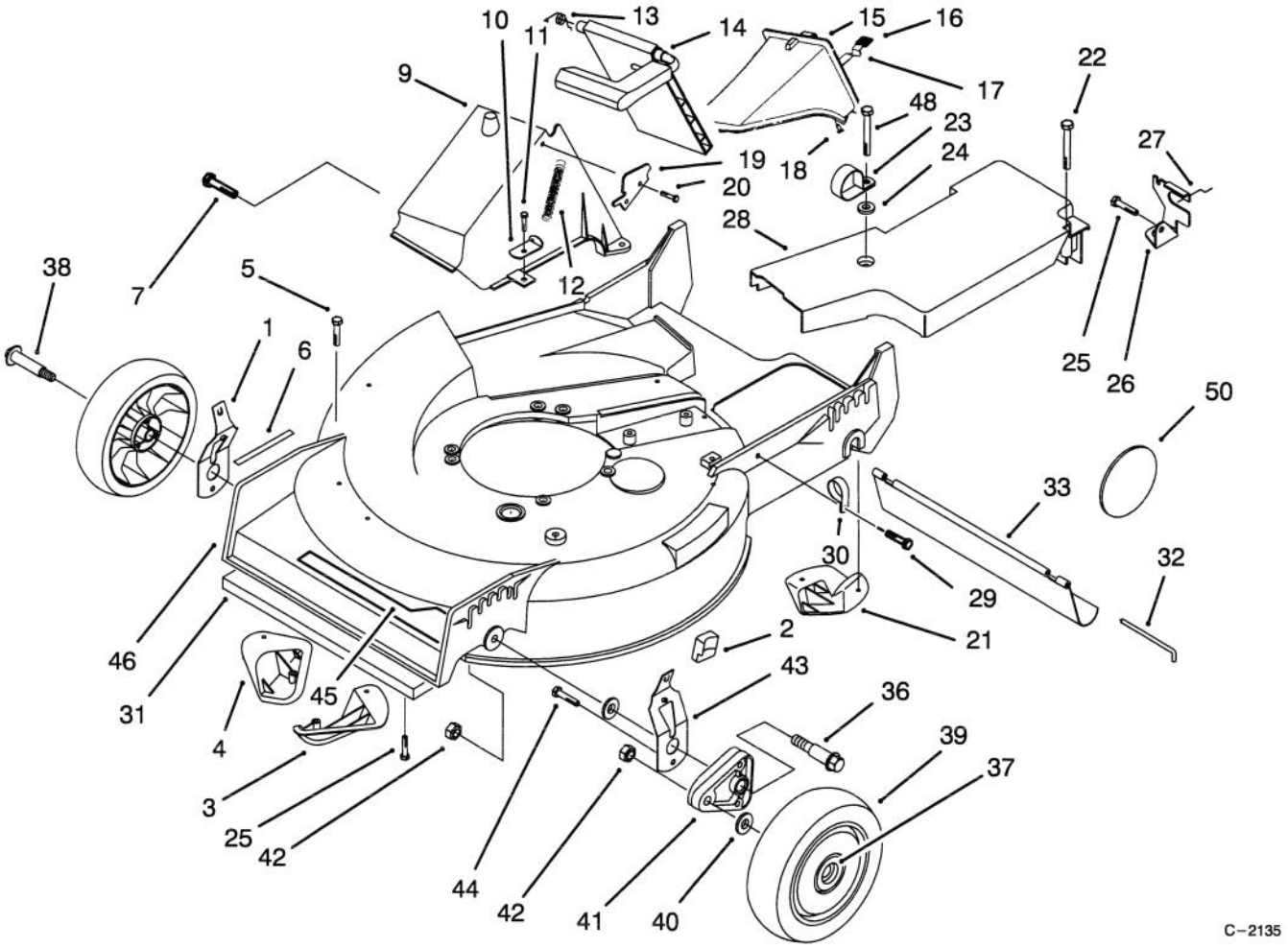

HOUSING ASSEMBLY (CONTINUED)

Ref. No.	Part No.	Description	No. Used
33	44–0580	Shield – Trailing	1
36	66–0560	Screw – Shoulder	2
37	27–6250	Bushing – Wheel	4
38	27–6232	Bolt – Wheel	2
39	14–9949	Wheel & Tire Assembly (Incl Ref. #37)	2
40	40–1940	Washer – Wheel Bolt	4
41	66–0580	Arm – Pivot	2
42	3296–6	Nut – Lock	4

Ref. No.	Part No.	Description	No. Used
43	71–0570	Spring Arm Assembly L.H.	1
44	32144–85	Screw – Thread Forming	2
45	92–7858	Decal – Deck	1
46	16–8719	Housing Assembly (Incl. Ref. #3–6, & 21 pg.1) (Incl. Ref. #5 & 6 pg. 3)	1
48	37–7262	Screw – Hex. Hd.	1
50	92–7663	Cover – Wheel	1

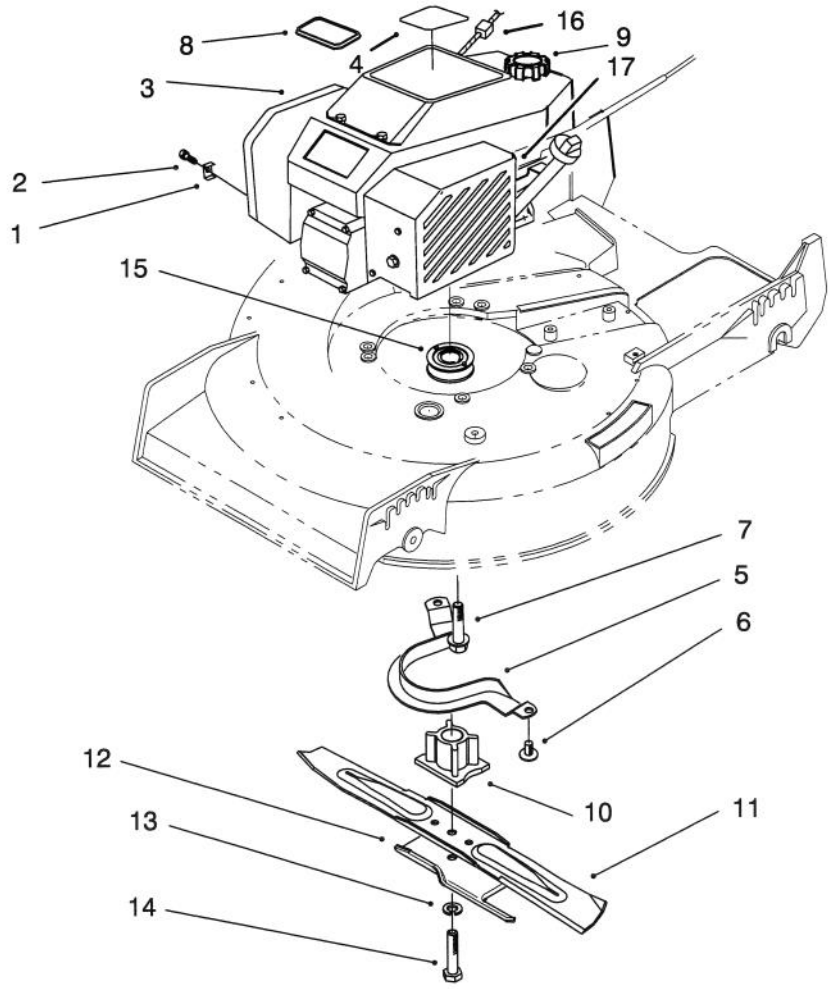

C–2087

ENGINE ASSEMBLY

Ref. No.	Part No.	Description	No. Used
1	2210–249	Clamp – Throttle	1
2	86–7990	Screw – Clamp	1
3	77–8952	Engine (Incl. Ref. #4, 8, & 9)	1
4	93–4355	Decal – Recoil	1
5	66–0570	Guide – Belt	1
6	32144–70	Screw – Hex Washer Hd.	2
7	32144–102	Screw – Thread Forming	3
8	92–2289	Plate – Toro	1

Ref. No.	Part No.	Description	No. Used
9	110352	Gas Cap Assembly	1
10	62–7540	Retainer – Blade	1
11	14–9419	Blade – 21"	1
12	92–1599	Stiffener – Accelerator	1
13	3253–22	Washer – Lock	1
14	26–0670	Screw – Blade	1
15	62–7550	Pulley – Driver	1
16	2210–316	Stop – Rope	1
17	77–9550	Cover – Brake	1

3317–285

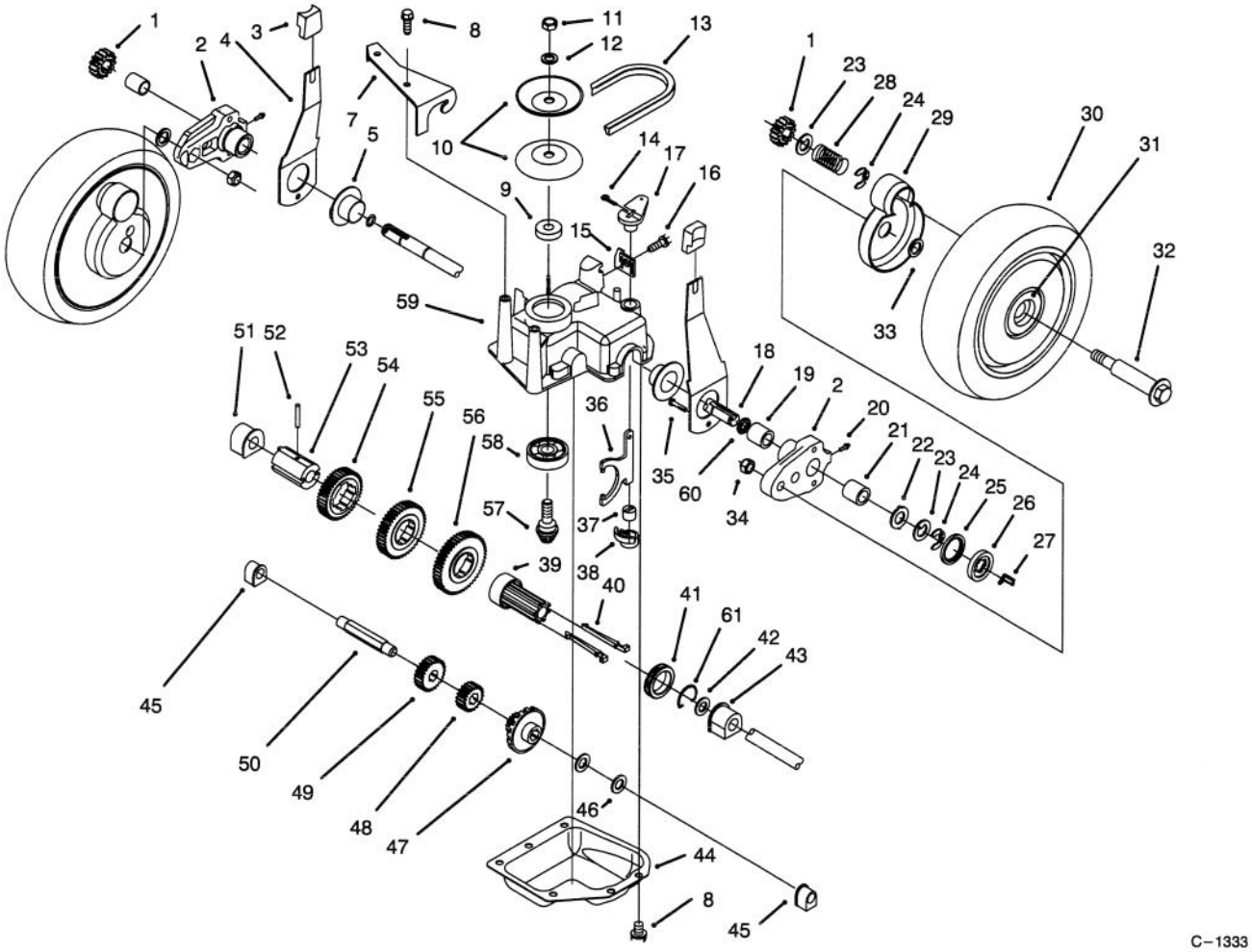

C–1333

GEAR CASE ASSEMBLY

Ref. No.	Part No.	Description	No. Used
1	65–4750	Pinion	2
2	63–8701	Pivot Arm Assembly (Incl. Ref # 19, 20, & 21)	2
3	25–7740	Knob – Arm	2
4	63–8720	Spring Arm Assembly	2
5	42–3520	End Cap	2
7	62–4320	Bracket – Belt Guide	1
8	49–2040	Screw – Self Tapping	8
9	62–6660	Spacer	1
10	60–8840	Pulley – Half	2
11	3296–5	Locknut	1
12	3256–24	Washer – Flat	1
13	62–3900	V–Belt	1
14	3272–10	Pin – Cotter	1
15	82–8780	Cable – Retainer	1
16	32144–70	Screw – Thread Forming	1
17	60–8821	Lever – Shift	1
18	65–4770	Shaft – Output	1
19	70–9760	Bushing	2
20	302–56	Fitting – Grease	2
21	48–2060	Needle Bearing	2
22	65–4730	Thrust Washer	2
23	65–4740	Thrust Washer	4
24	65–2720	Ring – Retaining	4
25	65–4710	Ring – Friction	2

Ref. No.	Part No.	Description	No. Used
26	65–4760	Washer – Clutch	2
27	66–6050	Key – Rocker L.H.	1
*	66–6040	Key – Rocker R.H.	1
28	65–4720	Spring	2
29	74–1660	Cover – Wheel	2
30	14–9959	Wheel – Tire & Gear Ass'y (Incl. Ref. # 31)	2
31	27–6250	Bushing – Wheel	4
32	27–6232	Wheel Bolt	2
33	74–1670	Spacer – Wheel Cover	2
34	3296–6	Locknut	2
35	32144–85	Screw	2
36	60–8870	Yoke – Shift	1
37	29–9570	Bushing – Yoke	1
38	60–8810	Retainer – Shift Fork	1
39	76–0780	Sleeve – Shift Key	1
40	76–0760	Key – Shift	2
41	76–0770	Collar – Shift	1
42	36–4780	Washer – Thrust	1
43	60–8770	Bushing – Output Shaft	1
44	60–8730	Cover – Gear Case	1
45	60–8750	Bushing – Int. Shaft	2
46	36–4791	Washer – Thrust	2
47	55–3760	Gear – Pinion 15 Tooth	1
48	55–3780	Gear – Pinion 20 Tooth	1

*Not Illustrated

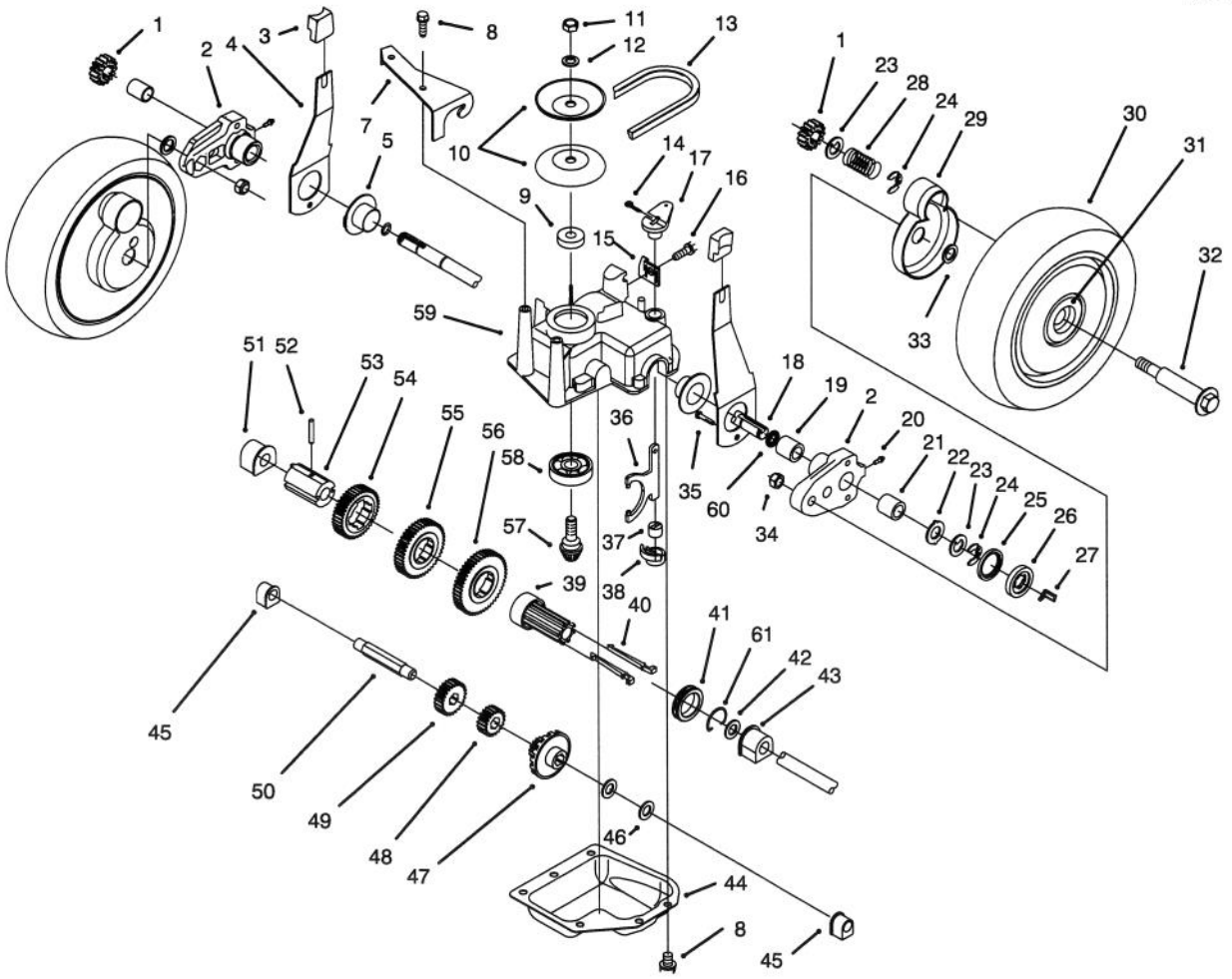

C–1333

GEAR CASE ASSEMBLY (CONTINUED)

Ref. No.	Part No.	Description	No. Used
49	55–3800	Gear – Pinion	1
50	60–8800	Shaft – Intermediate	1
51	60–8850	Bushing – Output Shaft	1
52	32121–120	Pin – Coil	1
53	60–8790	Sleeve – Gear	1
54	55–3810	Gear – 39 Tooth 3rd Gear	1
55	55–3790	Gear – 44 Tooth 2nd Gear	1

Ref. No.	Part No.	Description	No. Used
56	55–3770	Gear – 49 Tooth 1st Gear	1
57	60–8890	Pinion – Bevel	1
58	38–7820	Bearing – Ball	1
59	60–8710	Gear Case – Upper	1
60	237–153	O–Ring	2
61	65–5250	Clip – Spring	1
*	62–6673	Gear Case Assembly	1

*Not Illustrated

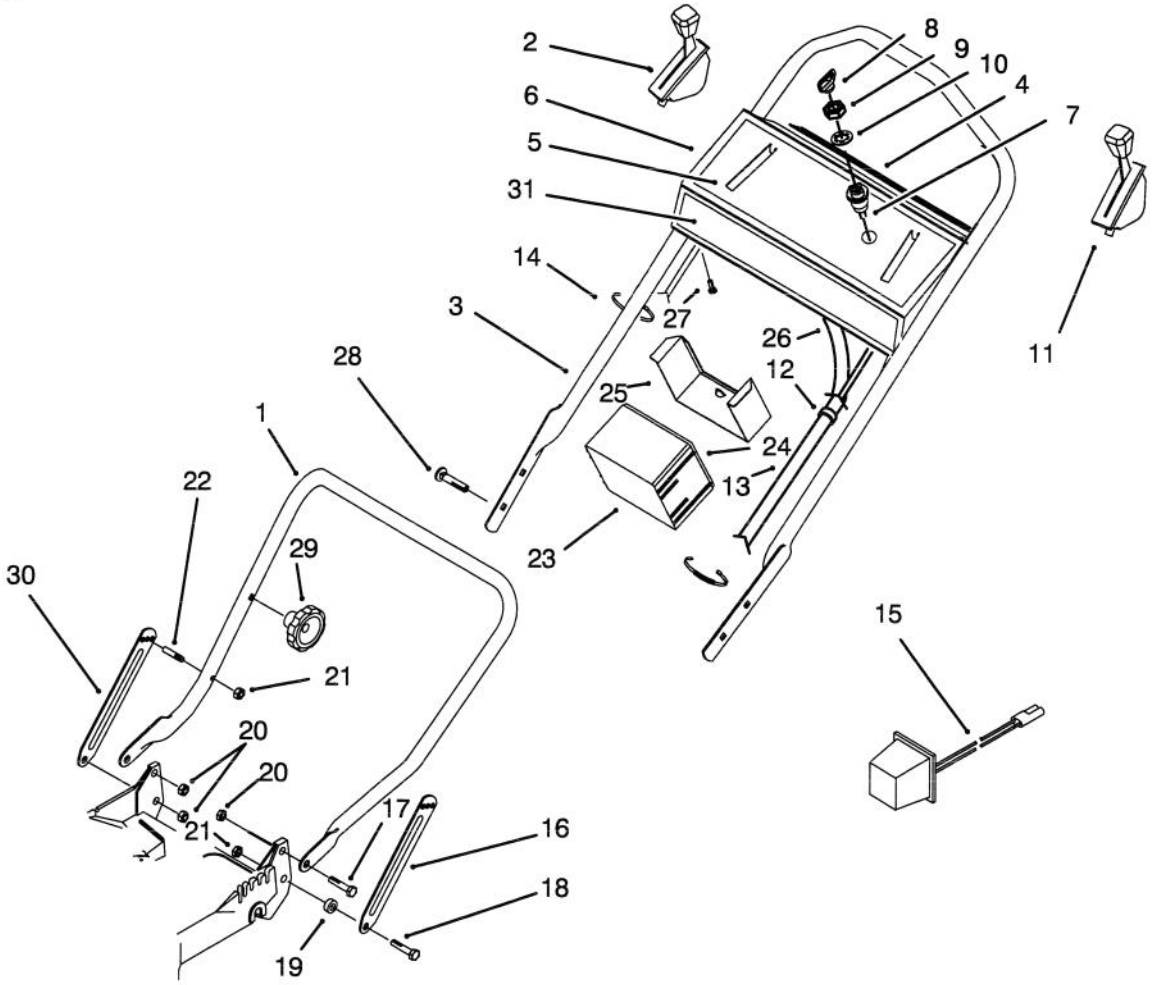

C–1551

HANDLE ASSEMBLY

Ref. No.	Part No.	Description	No. Used
1	82–5530	Handle – Lower	1
2	76–2712	Control – Ground Speed	1
3	84–8330	Handle – Upper	1
4	93–6655	Decal – Danger	1
5	93–6660	Decal – Instructions	1
6	16–8759	Panel – Control (Incl. Ref. #4 & 5)	1
7	46–5780	Switch – Starter	1
8	63–8360	Key – Ignition	1
9	218–461	Nut – Hex	1
10	3254–5	Washer – Lock	1
11	74–3892	Control – Throttle (Bend Type #3) (Sheath Lg. 62 3/4") (Wire Lg. 2 3/3")	1
12	2412–50	Clip – Convoluted Tubing	3
13	46–6440	Cover – Control Cables	1
14	3290–378	Tie – Cable	5

Ref. No.	Part No.	Description	No. Used
15	22–4710	Charger – Battery	1
16	84–8360	Latch – Handle L.H.	1
17	27–7211	Screw – Shoulder	2
18	27–7210	Screw – Shoulder	2
19	3–3287	Spacer – Handle Latch	2
20	3296–29	Nut – Lock	3
21	3296–47	Nut – Lock	3
†22	49–2750	Pin – Handle	2
23	55–7520	Battery Assembly	1
24	93–6668	Decal – Charging Instructions	1
25	55–8180	Retainer – Battery	1
26	80–4790	Harness – Wire	1
27	32144–115	Screw – Self Tap Slotted	5
28	17–9421	Screw – Handle	2
29	19–4050	Knob – Handle Release	2
30	84–8400	Latch – Handle R.H.	1
31	92–7862	Decal – Toro	1

†Service Replacement Part

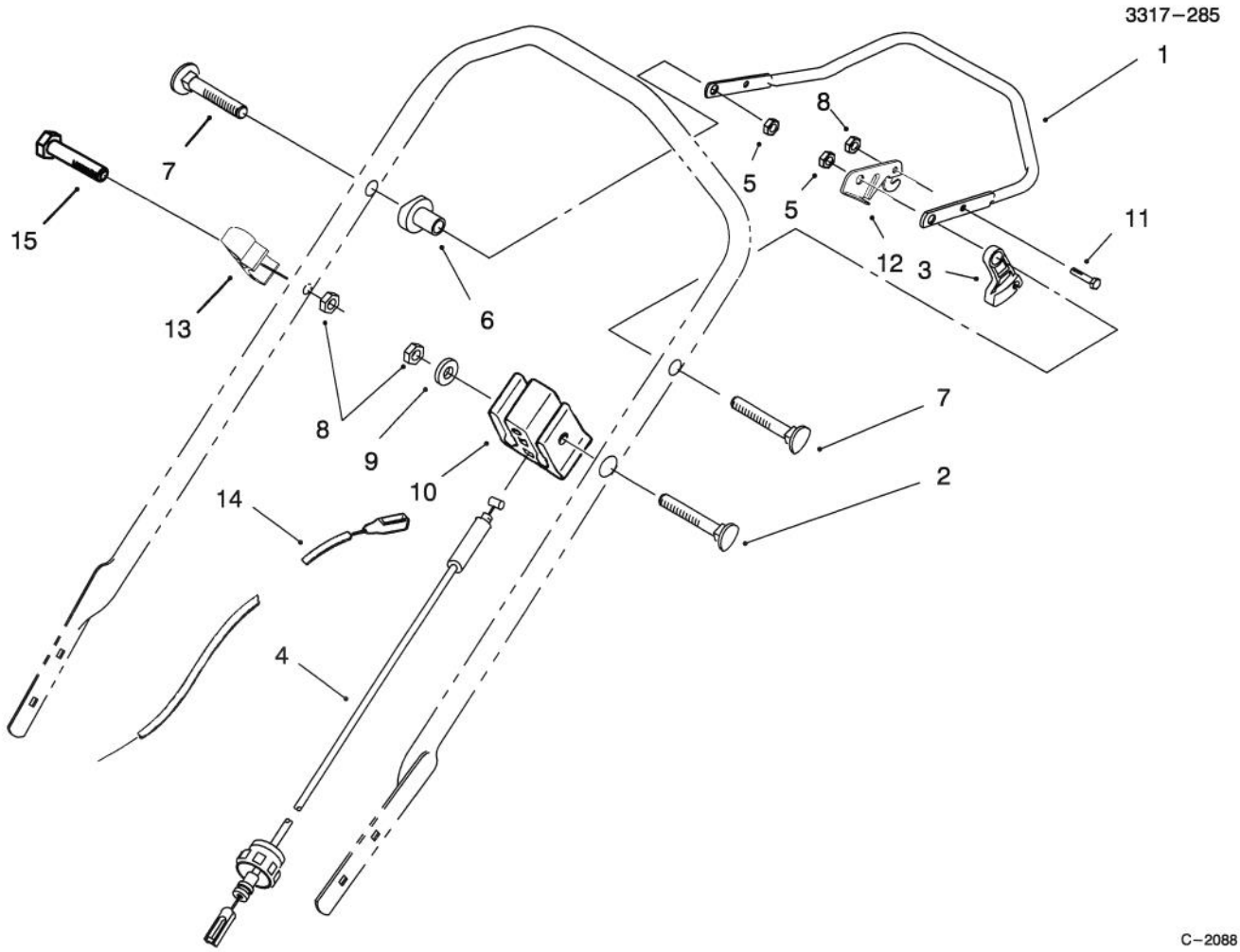

TRACTION CONTROL ASSEMBLY

Ref. No.	Part No.	Description	No. Used
1	52–7430	Control Bar Assembly	1
2	46–6434	Screw – Handle	1
3	46–5520	Lever – Traction	1
4	46–5481	Cable – Traction	1
5	3296–58	Locknut	2
6	49–1630	Support – Spacer	2
7	17–9421	Screw – Handle	2
8	3296–42	Nut – Lock	3

Ref. No.	Part No.	Description	No. Used
9	3256–22	Washer – Flat	1
10	46–6980	Support – Cable	1
11	321–3	Screw – Hex Hd. Cap	1
12	66–5350	Lever – Control	1
13	92–7720	Guide – Rope	1
14	76–4331	Cable – Brake	1
15	321–52	Screw – Hex Hd. Cap	1

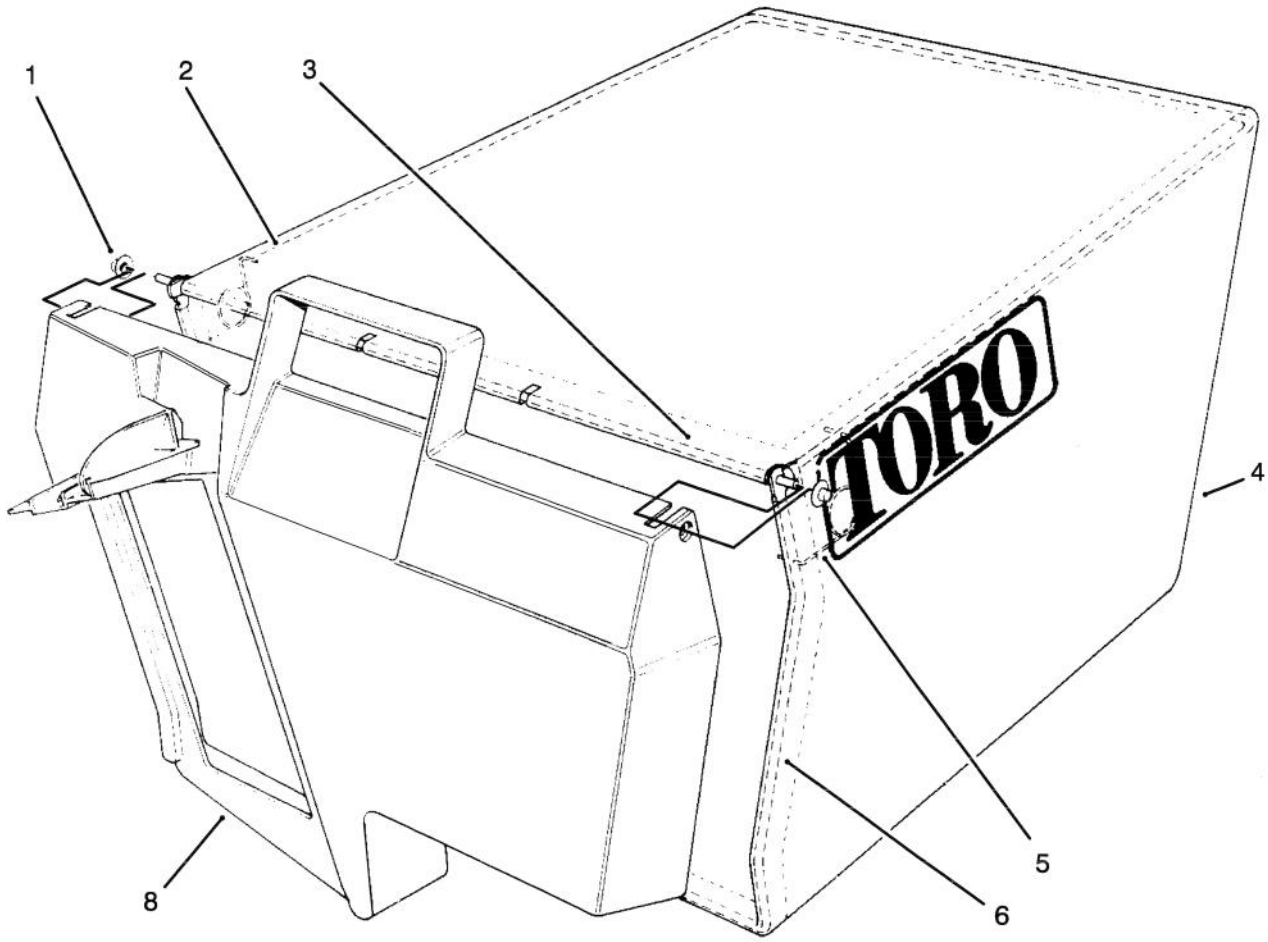

C–1839

GRASS BAG ASSEMBLY NO. 11–0189

Ref. No.	Part No.	Description	No. Used
1	3290–422	Nut – Push	2
2	42–4030	Bag Frame – Upper	1
3	33–4820	Hinge – Bag Door	1
4	8–2759	Bag – Grass	1

Ref. No.	Part No.	Description	No. Used
5	36–6910	Spring	2
6	42–4020	Frame – Bag	1
8	37–1393	Door – Grass Bag	1

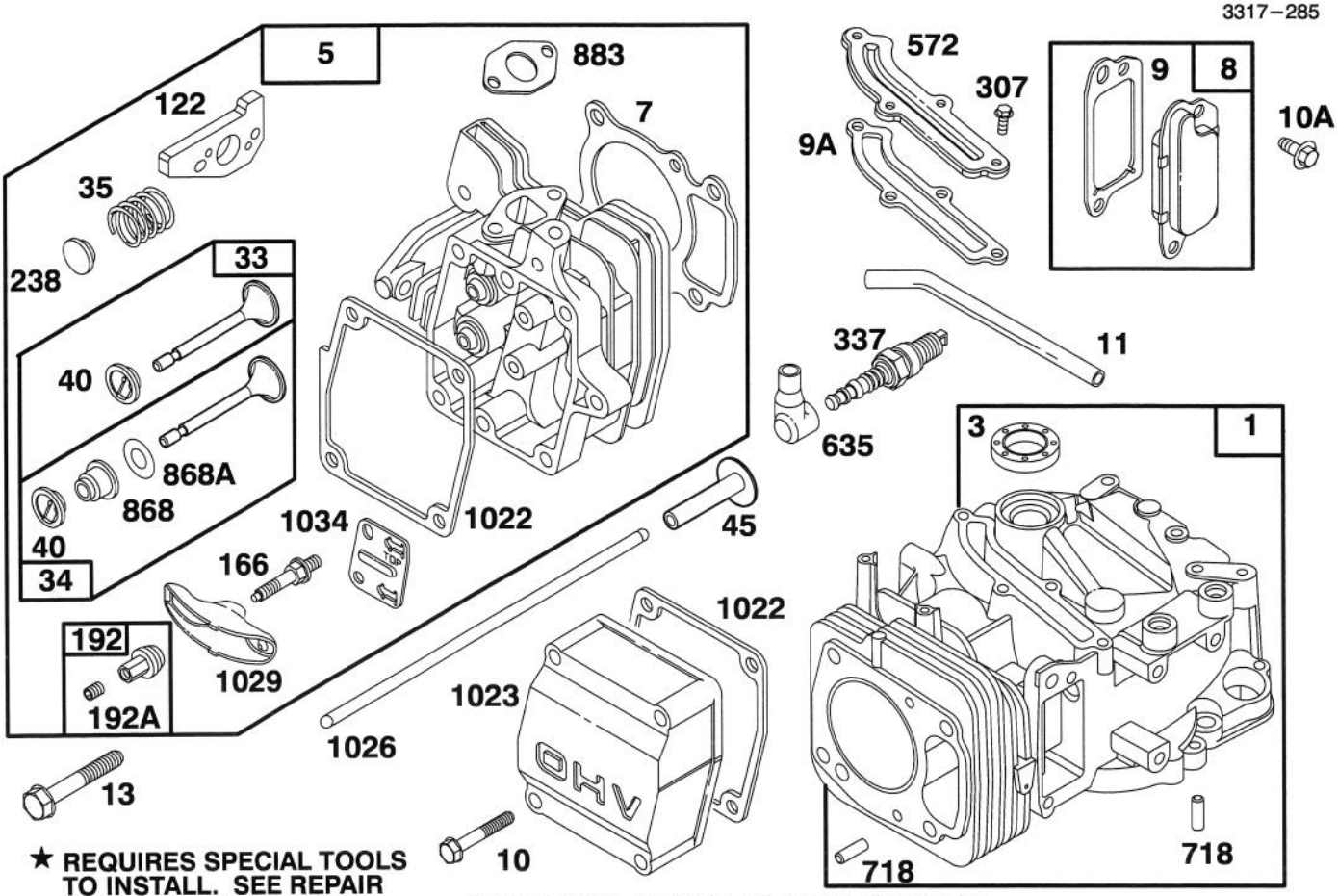

★ **REQUIRES SPECIAL TOOLS TO INSTALL. SEE REPAIR INSTRUCTION MANUAL.**

Assemblies include all parts shown in frames.

ENGINE GTS–150

Ref. No.	Part No.	Description	No. Used
1	77–7590	Cylinder Ass'y	1
★3	77–9060	Seal – Oil	1
5	77–7730	Head – Cylinder	1
★7	77–7740	Gasket – Cylinder Head	1
8	77–9300	Breather Ass'y	1
★9	77–9250	Gasket – Breather	1
★9A	77–7410	Gasket – Breather	1
10	77–7360	Screw – Hex Head (Valve Cover)	1
10A	77–9200	Screw – Hex Head	1
11	77–9410	Tube – Breather	1
13	77–7630	Screw – Cylinder Head	1
33	77–7860	Valve – Exhaust	1
34	77–7880	Valve – Intake	1
35	77–7810	Spring – Valve	1
40	77–7870	Retainer – Spring	1
45	77–7610	Tappet – Valve	1
●122	77–7820	Adapter Ass'y	1
166	77–7780	Stud – Rocker Arm	1

Ref. No.	Part No.	Description	No. Used
192	77–7910	Ball & Screw – Rocker Arm	1
192A	77–9310	Screw – Set	1
238	77–7800	Cap – Valve	1
307	77–7420	Screw – Breather Cover Mtg.	1
337	77–7330	Plug – Spark	1
572	77–7400	Cover – Breather	1
635	77–7340	Elbow – Spark Plug	1
718	77–7600	Pin – Cylinder	1
★868	77–7890	Seal Ass'y – Valve	1
★868A	77–7900	Gasket – Valve	1
★883	77–7760	Gasket – Exhaust	1
★1022	77–7320	Gasket – Rocker Cover	1
1023	77–9320	Cover – Valve	1
1026	77–7620	Rod – Push	1
1029	77–7790	Arm – Rocker	1
1034	77–7770	Guide – Push Rod	1
	77–9020	Short Block	1

★ Included in Gasket Set–Part No. 77–8900

● Included in Carburetor Overhaul Kit–Part No. 77–8920

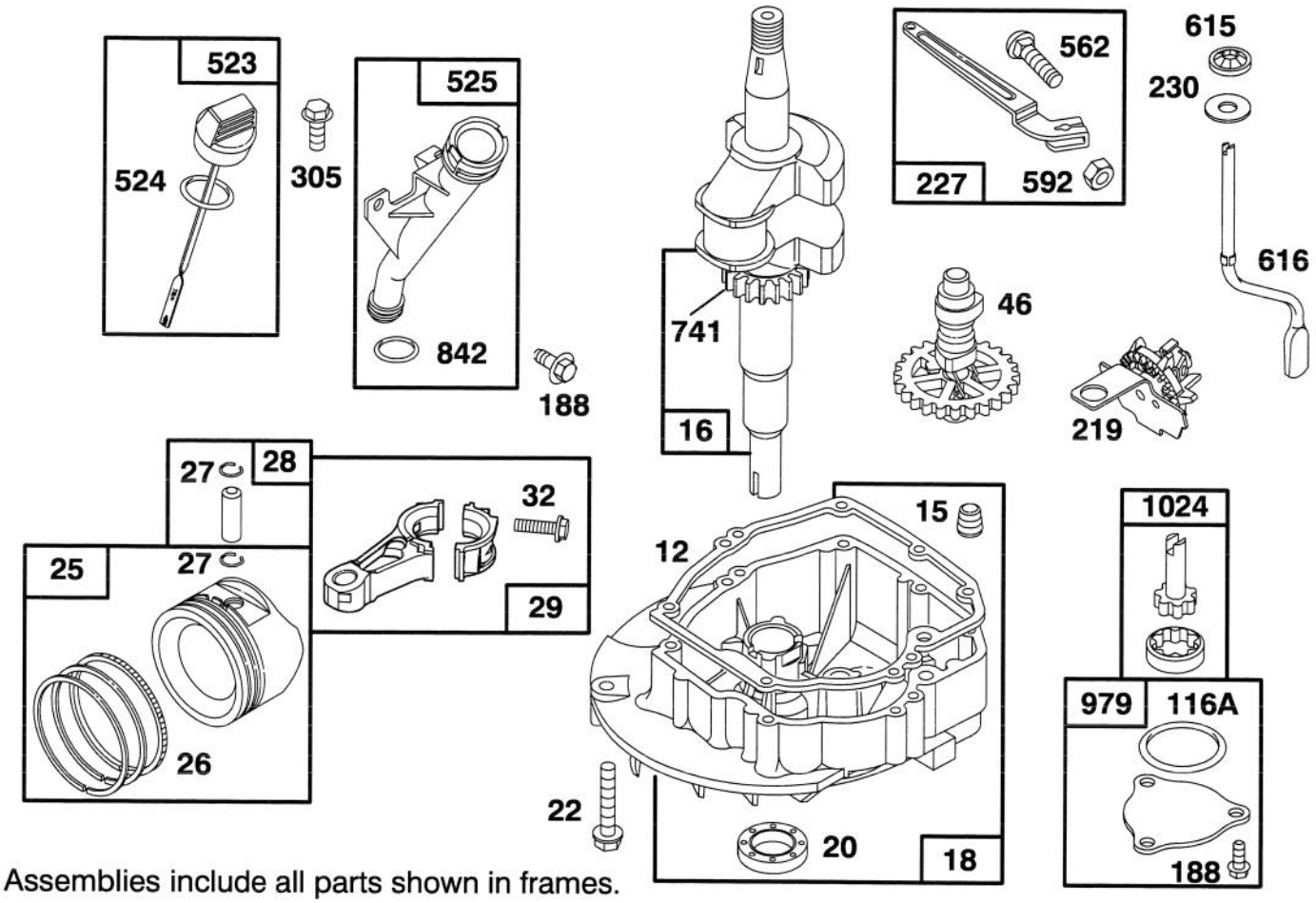

Assemblies include all parts shown in frames.

ENGINE GTS–150

Ref. No.	Part No.	Description	No. Used
★12	77–7550	Gasket – Engine Base	1
15	77–9240	Plug – Pipe	1
16	77–9330	Crankshaft **Note:** Order Part No. 77–7540 For Timing Gear Key	1 1
18	77–7560	Base – Engine	1
★20	77–7570	Seal – Oil	1
22	77–9070	Screw – Engine Base	1
25	77–7690	Piston Ass'y (Std.)	1
26	77–7700	Ring Set (Std.)	1
27	77–7710	Lock – Piston Pin	1
28	77–9340	Pin Ass'y – Piston	1
29	77–7670	Rod – Connecting	1
32	77–9350	Screw – Conn. Rod	1
46	77–7490	Gear – Cam	1
★116A	77–7660	O-Ring	1

Ref. No.	Part No.	Description	No. Used
188	77–9360	Screw – Hex Head	1
219	77–7500	Gear – Governor	1
227	77–7370	Lever Ass'y – Governor	1
230	77–7470	Washer	1
305	77–8310	Screw – Hex Head	1
523	77–7260	Dipstick – Oil	1
★524	77–7270	Seal – O-Ring	1
525	77–7280	Tube – Oil Filler	1
562	77–7380	Bolt – Governor Lever	1
592	77–7390	Nut – Hex	1
615	77–7480	Pushnut	1
616	77–7460	Crank – Governor	1
741	77–7530	Gear – Timing	1
★842	77–7300	Seal – O-Ring	1
979	77–7650	Cover – Oil Pump	1
1024	77–7640	Pump – Oil	1

★ Included in Gasket Set–Part No. 77–8900

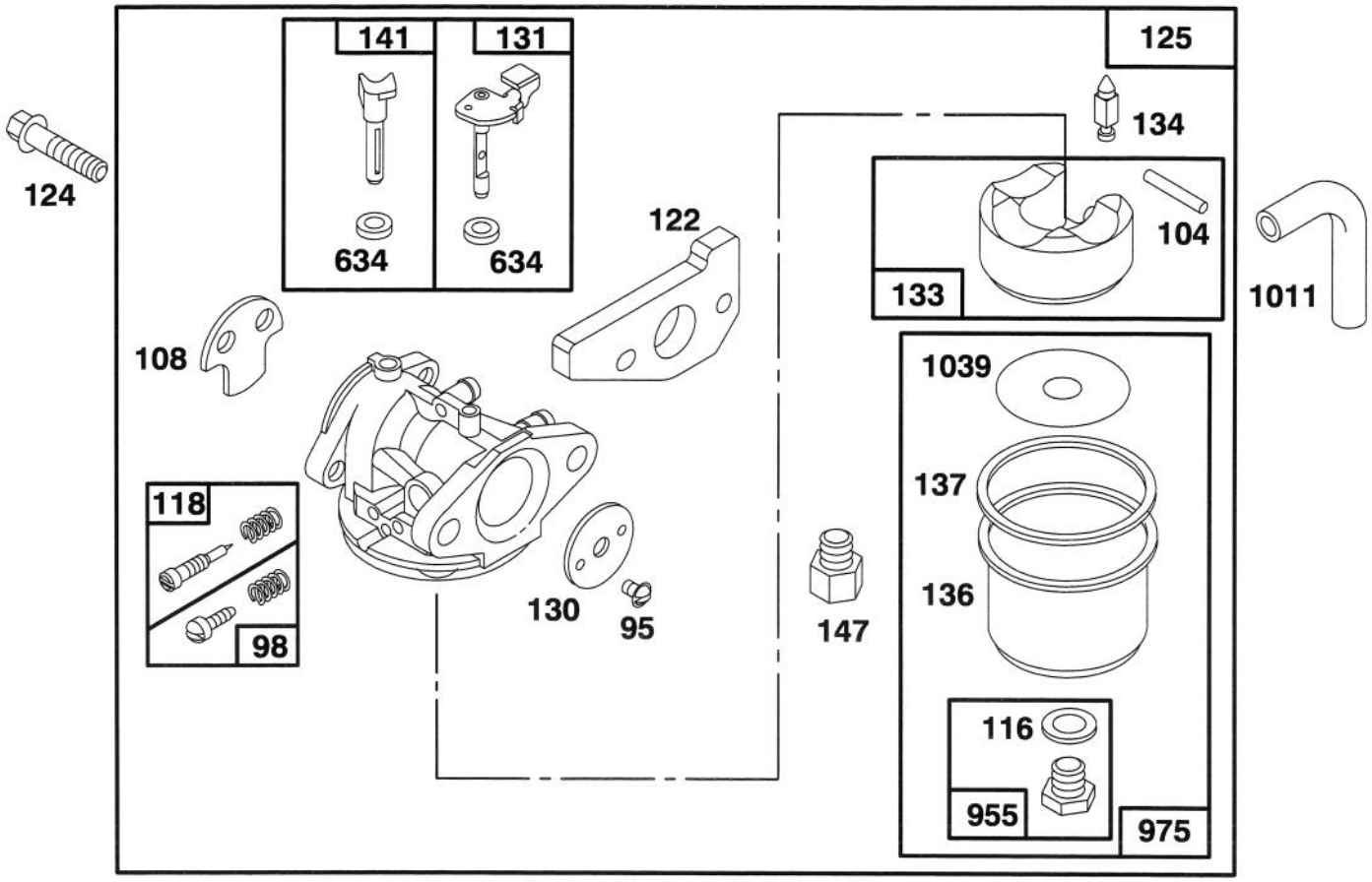

Assemblies include all parts shown in frames.

ENGINE GTS–150

Ref. No.	Part No.	Description	No. Used
95	77–8090	Screw – Valve Mtg.	1
98	77–8240	Screw – Idle Adj.	1
●104	77–8180	Pin – Float Hinge	1
108	77–8070	Valve – Choke	1
●◆116	77–8210	Sealing – Gasket	1
●118	77–8230	Valve & Spring – Needle	1
●122	77–7820	Adapter Ass'y	1
124	77–7970	Screw – Hex Head (Carb. Mtg.)	1
125	77–8050	Carburetor Ass'y	1
130	77–8080	Valve – Throttle	1
131	77–8160	Shaft – Throttle	1
133	77–8170	Float – Carburetor	1
●134	77–8110	Valve – Inlet (Includes Seat)	1

Ref. No.	Part No.	Description	No. Used
136	77–7240	Bowl – Fuel	1
●◆137	77–8200	Gasket – Float Bowl	1
141	77–8130	Shaft – Choke	1
147	77–8120	Adapter – Jet **Note:** For High Altitude Jet Order Part No. 77–9000	1
◆634	77–8150	Washer – Seal	1
955	77–8220	Screw – Hex Head	1
975	77–8190	Bowl Ass'y – Carburetor	1
1011	77–8040	Tube – Vent	1
●1039	77–7250	Limiter – Float	1

● Incl. in Carburetor Overhaul Kit–Part No. 77–8920
◆ Included in Carburetor Gasket Set–Part No. 77–8930

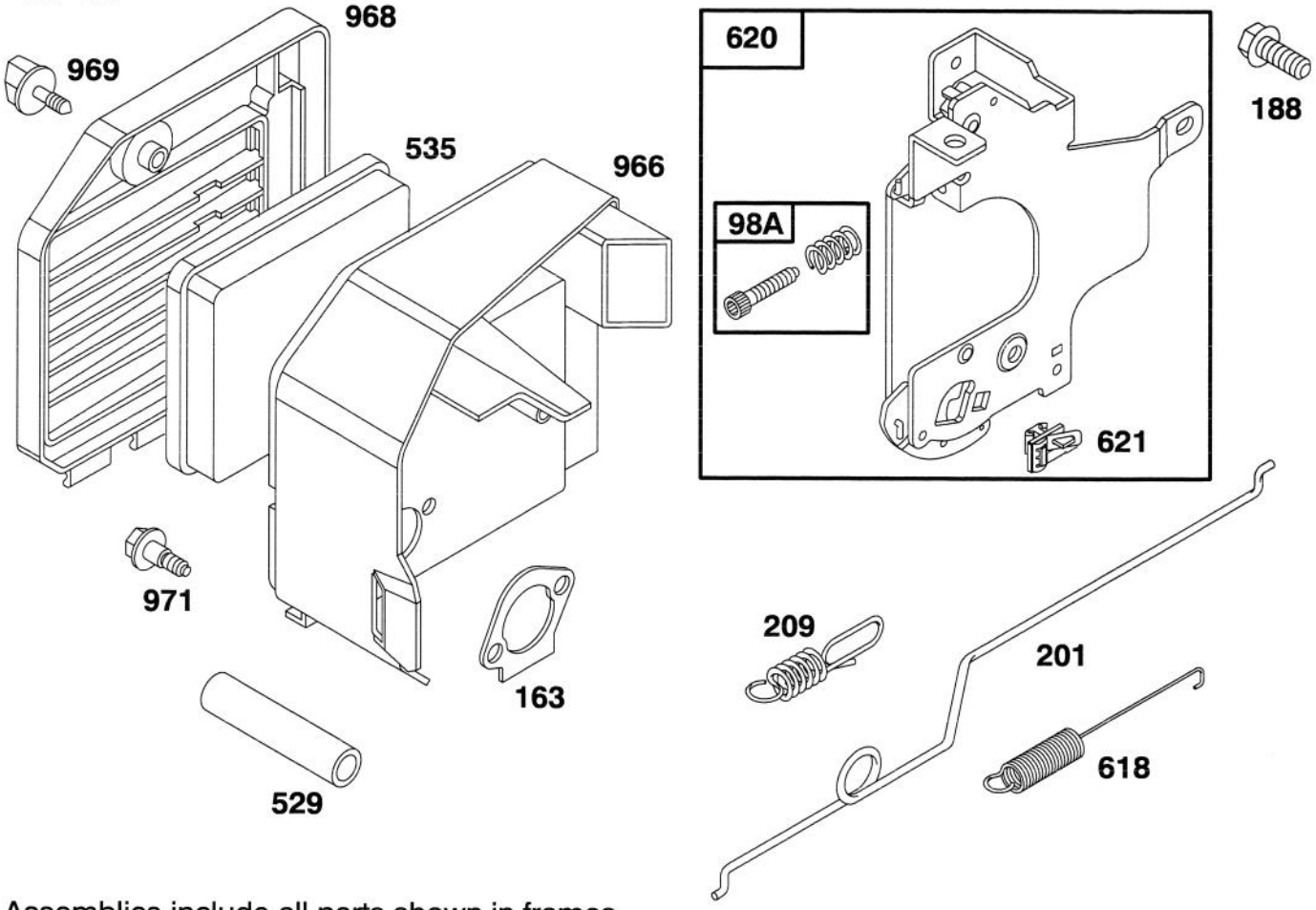

Assemblies include all parts shown in frames.

ENGINE GTS–150

Ref. No.	Part No.	Description	No. Used
98A	77–8020	Screw Ass'y – Speed Adj.	1
★163	77–7960	Gasket – Air Cleaner	1
188	77–9360	Screw – Hex. Head	1
201	77–7980	Link – Governor	1
209	77–7990	Spring – Governor	1
529	77–9470	Tube – Breather	1
535	77–7950	Element – Filter	1

Ref. No.	Part No.	Description	No. Used
618	77–8140	Spring – Choke	1
620	77–8000	Bracket – Carburetor	1
621	77–8010	Switch – Stop	1
966	77–7940	Base – Air Cleaner	1
968	77–7040	Cover – Air Cleaner	1
969	77–7920	Screw – Air Cleaner	1
971	77–7930	Screw – Air Cleaner	1

★ Included in Gasket Set–Part No. 77–8900

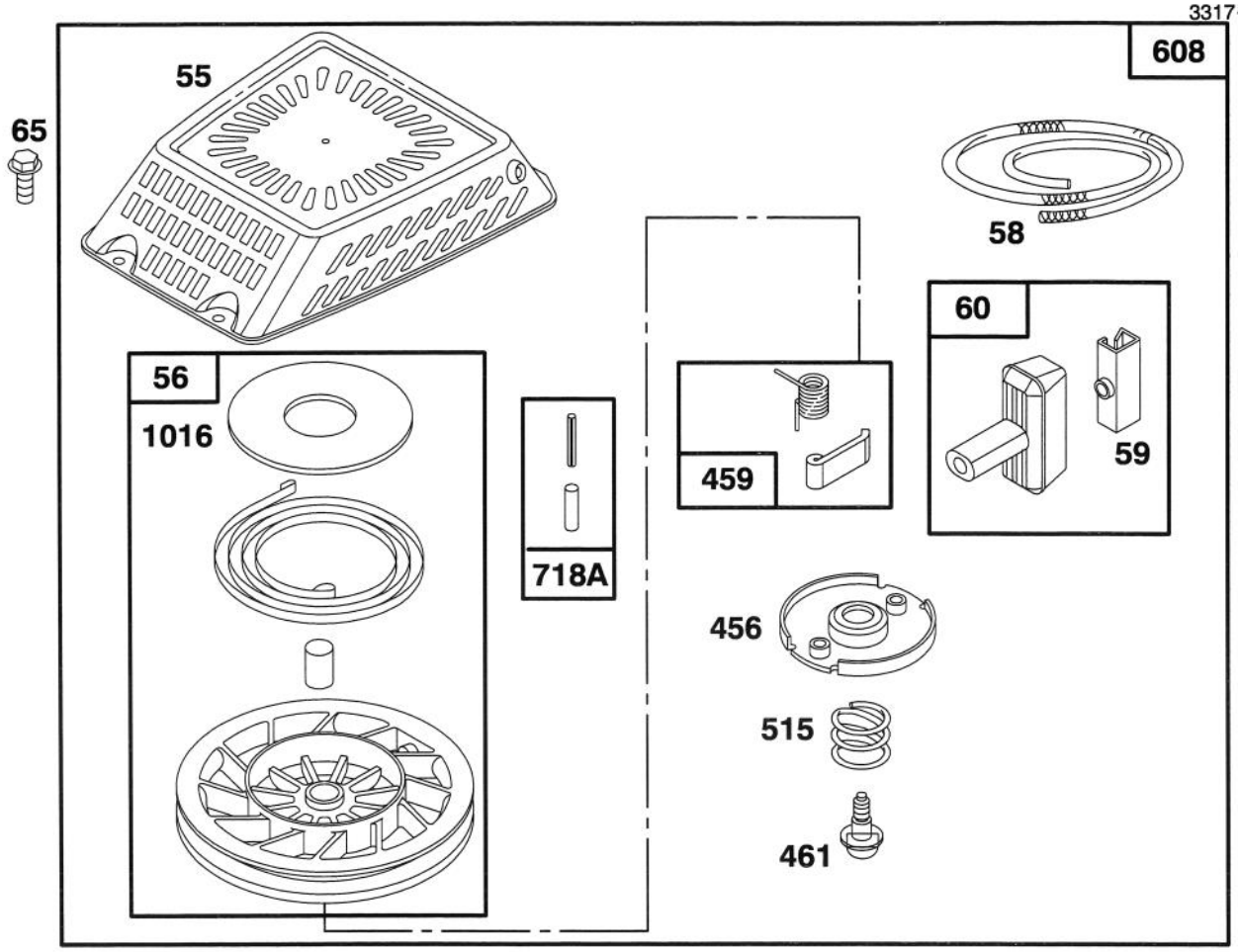

Assemblies include all parts shown in frames.

ENGINE GTS–150

Ref. No.	Part No.	Description	No. Used
55	77–8890	Housing – Rewind Starter	1
56	77–9270	Pulley – Rewind Starter	1
58	77–8480	Rope – Starter (Cut To Suit)	1
59	77–9380	Insert – Rewind Handle	1
60	77–9390	Handle – Rewind Starter	1
65	77–8300	Screw – Hex Head	1

Ref. No.	Part No.	Description	No. Used
456	77–8470	Retainer – Rewind Starter	1
459	77–8530	Pawl – Starter	1
461	77–8490	Screw – Rewind Starter	1
515	77–8500	Spring – Torsion	1
608	77–9400	Starter Ass'y – Rewind	1
718A	77–8550	Pin – Spring	1
1016	77–8570	Cover – Spring	1

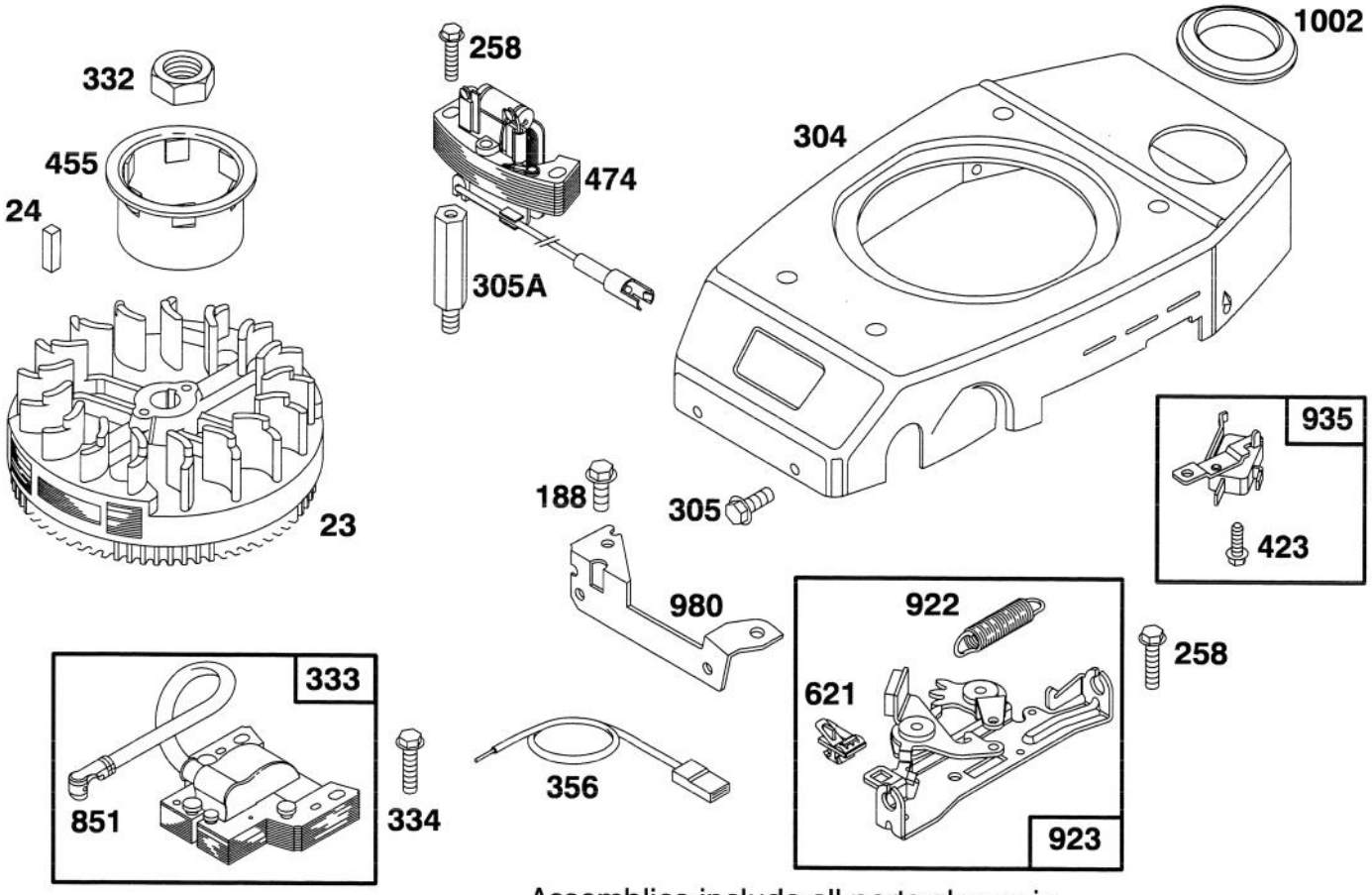

Assemblies include all parts shown in frames.

ENGINE GTS–150

Ref. No.	Part No.	Description	No. Used
23	77–8320	Flywheel	1
24	77–8340	Key – Flywheel	1
188	77–9360	Screw – Hex Head	1
258	77–8870	Screw – Hex Head	1
304	77–9480	Housing – Blower	1
305	77–8310	Screw – Hex Head	1
305A	77–8390	Stud	1
332	77–8360	Nut – Flywheel	1
333	77–8420	Armature – Magneto	1
334	77–7420	Screw – Armature Mtg.	1
356	77–8400	Wire – Ground	1

Ref. No.	Part No.	Description	No. Used
423	77–9520	Screw – Hex Head	1
455	77–8350	Cup – Starter	1
474	77–8370	Alternator	1
621	77–8010	Switch – Stop	1
851	77–9450	Terminal – Spark Plug	1
922	77–8860	Spring –Brake	1
923	77–9460	Brake Ass'y	1
935	77–9530	Switch – Starter	1
980	77–7140	Bracket – Blower Housing	1
1002	77–7180	Grommet	1

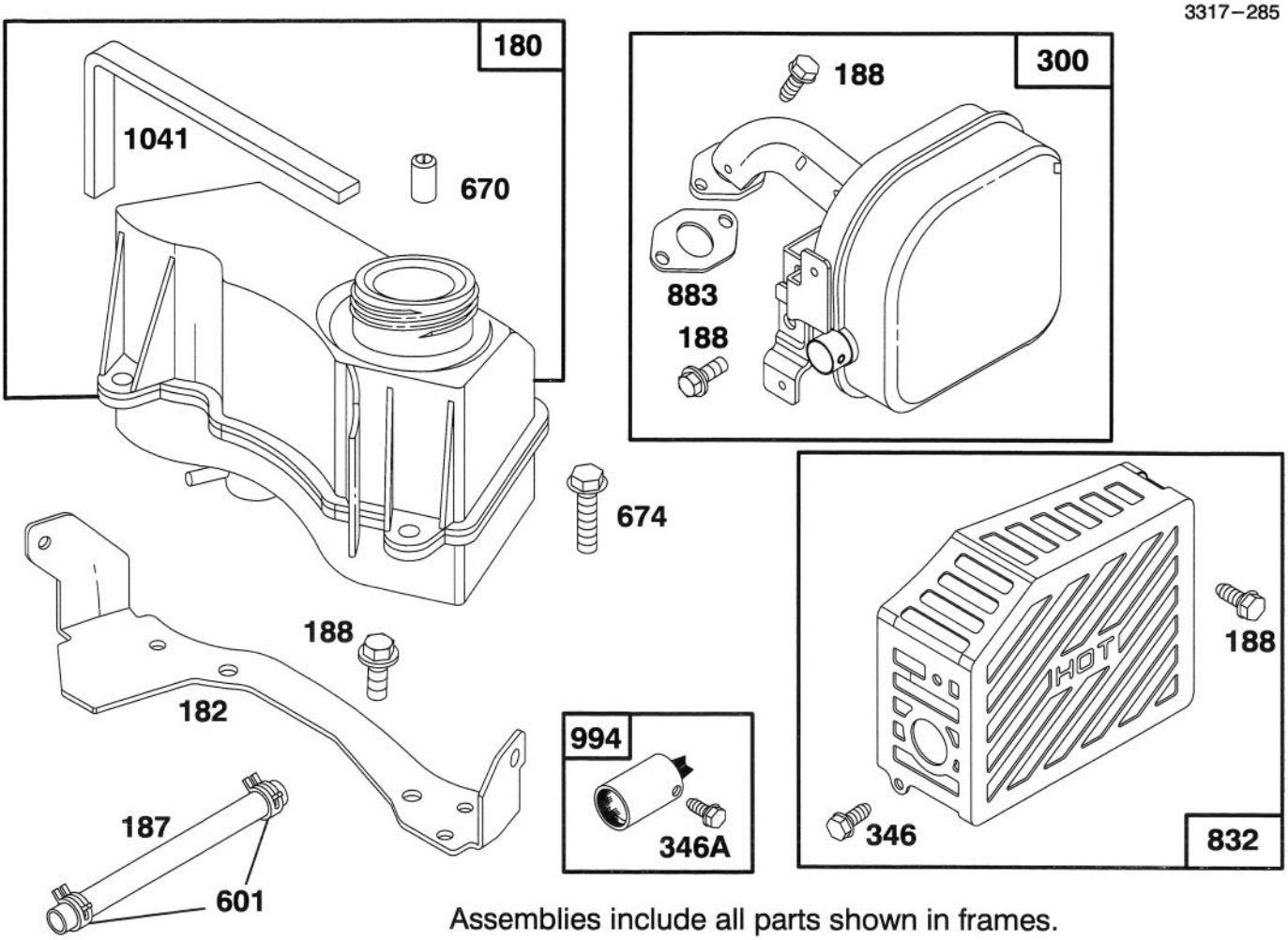

Assemblies include all parts shown in frames.

ENGINE GTS–150

Ref. No.	Part No.	Description	No. Used
180	77–7580	Tank Ass'y – Fuel	1
182	77–7170	Bracket – Fuel Tank	1
187	77–8620	Hose – Fuel (Cut To Suit)	1
188	77–9360	Screw – Hex Head	1
300	77–8640	Muffler – Exhaust	1
346	77–9430	Screw – Hex	1
346A	77–9050	Screw – Arrester Mtg.	1

Ref. No.	Part No.	Description	No. Used
601	77–8630	Clamp – Fuel Hose	1
670	77–9030	Spacer – Fuel Tank (Includes 2)	1
674	77–8600	Screw – Tank Mtg.	1
832	77–8660	Guard – Muffler	1
★883	77–7760	Gasket – Exhaust	1
994	77–9040	Arrester – Spark	1
★1041	77–8590	Seal – Foam	1

★ Included in Gasket Set–Part No. 77–8900

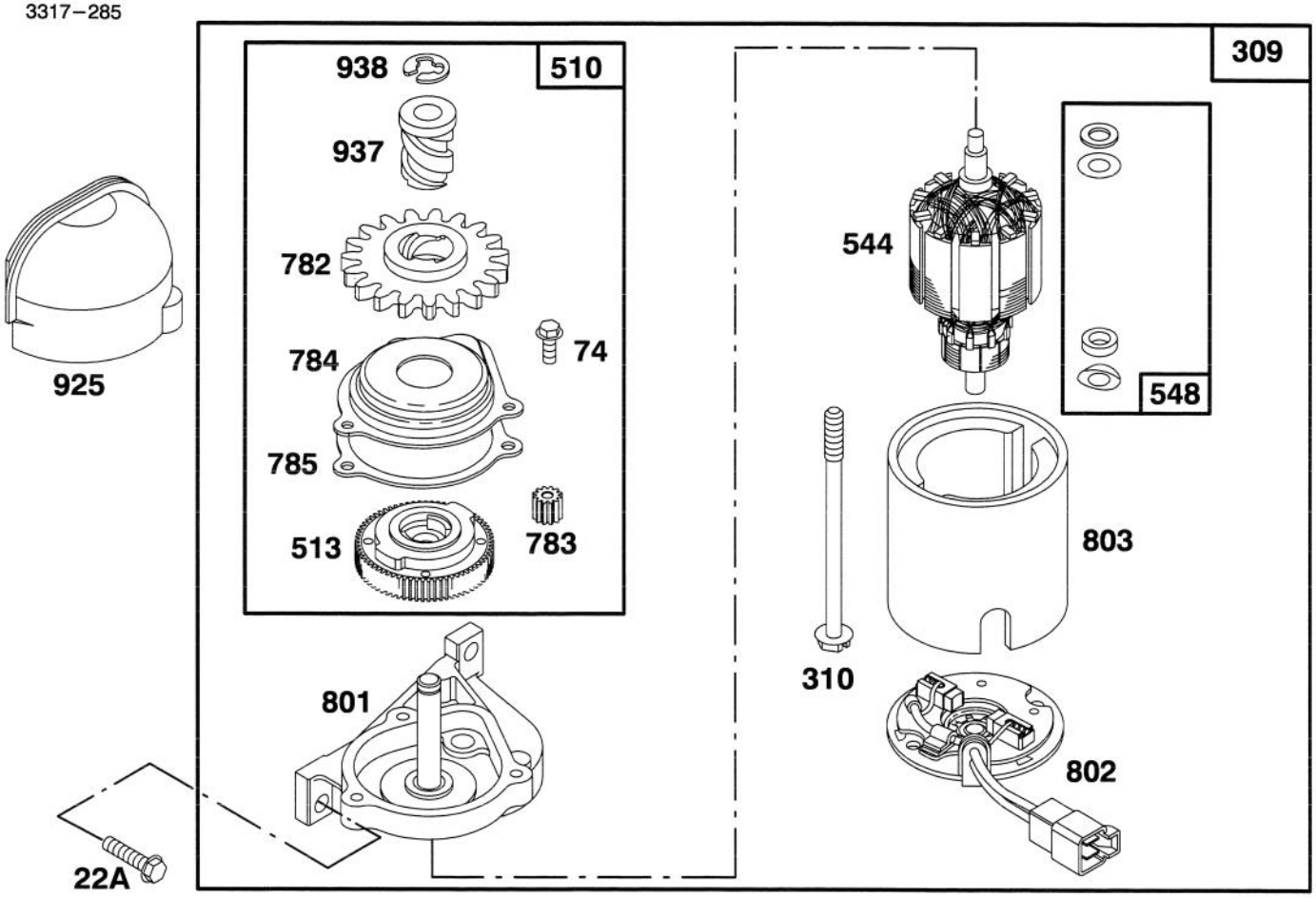

Assemblies include all parts shown in frames.

ENGINE GTS–150

Ref. No.	Part No.	Description	No. Used
22A	77–8720	Screw–Hex Head	1
74	77–8800	Screw–Hex Head	1
309	77–8670	Motor–Starter	1
310	77–8710	Screw–Hex Head	1
510	77–8910	Drive Kit	1
513	77–8770	Clutch Assembly	1
544	77–8730	Armature Assembly	1
548	77–8740	Washer Set	1
782	77–8810	Pinion–Starter	1

Ref. No.	Part No.	Description	No. Used
783	77–9540	Gear – Pinion	1
784	77–8780	Cover–Gear	1
785	77–8790	Gasket–Cover	1
801	77–8680	Bracket Assembly	1
802	77–8690	Head Assembly	1
803	77–8700	Shell and Magnet Ass'y	1
925	77–7200	Cover–Starter	1
937	77–8820	Spline–Starter	1
938	77–8830	Retainer–Lock	1

★ Included in Gasket Set–Part No. 77–8900

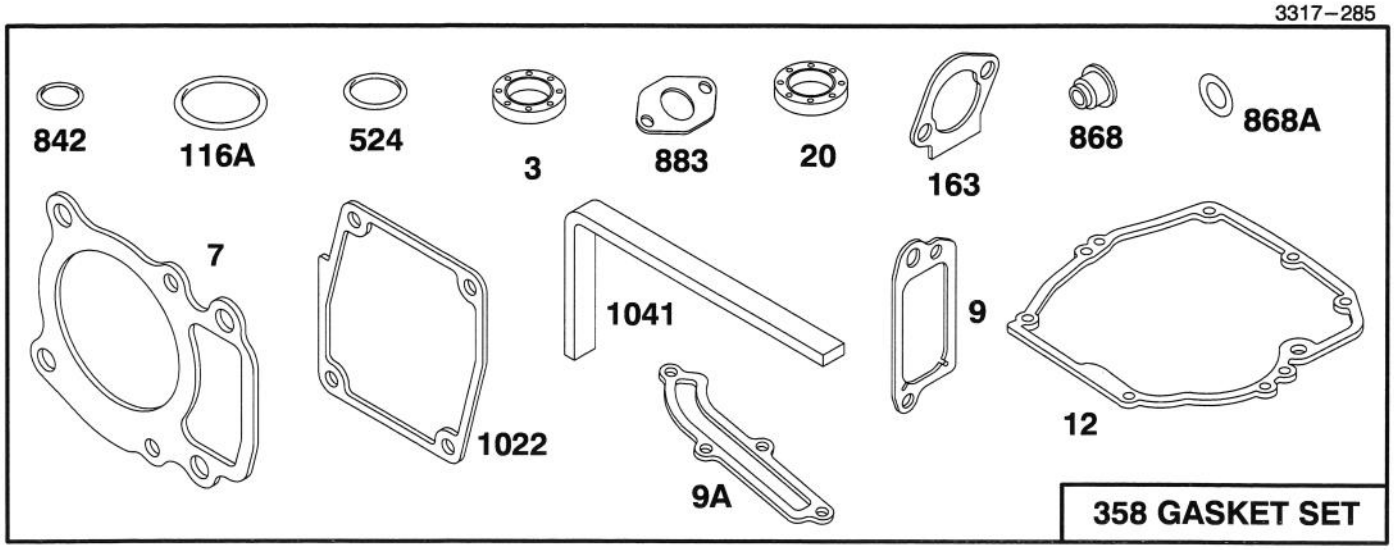

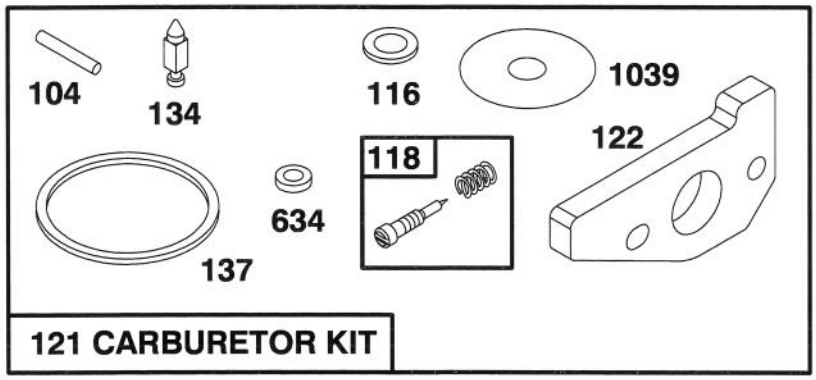

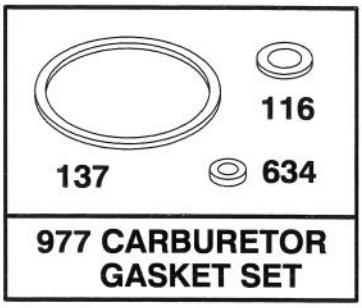

Assemblies include all parts shown in frames.

ENGINE GTS–150

Ref. No.	Part No.	Description	No. Used
★3	77–9060	Seal – Oil	1
★7	77–7740	Gasket – Cylinder Head	1
★9	77–9250	Gasket – Breather	1
★9A	77–7410	Gasket – Breather	1
★12	77–7550	Gasket – Engine Base	1
★20	77–7570	Seal – Oil	1
●104	77–8180	Pin – Float Hinge	1
●◆116	77–7660	Gasket – Sealing	1
★116A	77–8210	O-Ring	1
●118	77–8230	Valve and Spring – Needle	1
121	77–8920	Carburetor Kit	1
●122	77–7820	Adapter Assembly	1
●134	77–8110	Valve – Inlet (Includes Seat)	1

Ref. No.	Part No.	Description	No. Used
●◆137	77–8200	Gasket – Float Bowl	1
★163	77–7960	Gasket – Air Cleaner	1
358	77–8900	Gasket Set	1
★524	77–7270	Seal – O-Ring	1
◆634	77–8150	Washer – Seal	1
★842	77–7300	Seal – O-Ring	1
★868	77–7890	Seal Assy. – Valve	1
★868A	77–7900	Seal – Valve	1
★883	77–7760	Gasket – Exhaust	1
977	77–8930	Carburetor Gasket Set	1
★1022	77–7320	Gasket – Rocker Cover	1
●1039	77–7250	Limiter – Float	1
★1041	77–8590	Seal – Foam	1

● Included in Carburetor Kit–Part No. 77–8920
◆ Incl. in Carburetor Gasket Set–Part No. 77–8930

★ Included in Gasket Set–Part No. 77–8900

TORO PART NUMBER INDEX

Part No.	Description	Pg. No.	Ref. No.	Qty.
110352	Gas Cap Assembly	3	9	1
3–3287	Spacer – Handle Latch	6	19	2
3–5792	Washer	1	24	1
8–2759	Bag – Grass	8	4	1
14–9419	Blade – 21	3	11	1
14–9949	Wheel & Tire Assembly	2	39	2
14–9959	Wheel – Tire & Gear Ass'y	4	30	2
16–8719	Housing Assembly	2	46	1
16–8759	Panel – Control	6	6	1
17–9421	Screw – Handle	7	7	2
17–9421	Screw – Handle	6	28	2
19–4050	Knob – Handle Release	6	29	2
22–4710	Charger – Battery	6	15	1
25–7740	Knob – Arm	1	2	2
25–7740	Knob – Arm	4	3	2
26–0670	Screw – Blade	3	14	1
27–6232	Bolt – Wheel	2	38	2
27–6232	Wheel Bolt	4	32	2
27–6250	Bushing – Wheel	4	31	4
27–6250	Bushing – Wheel	2	37	4
27–7210	Screw – Shoulder	6	18	2
27–7211	Screw – Shoulder	6	17	2
29–9570	Bushing – Yoke	4	37	1
33–3208	Rod – Shield	1	32	1
33–4820	Hinge – Bag Door	8	3	1
36–4780	Washer – Thrust	4	42	1
36–4791	Washer – Thrust	4	46	2
36–6910	Spring	8	5	2
37–1393	Door – Grass Bag	8	8	1
37–7260	Screw – Hex Hd. Tapping	1	22	1
37–7262	Screw – Hex. Hd.	2	48	1
38–7820	Bearing – Ball	5	58	1
40–1940	Washer – Wheel Bolt	2	40	4
42–3520	End Cap	4	5	2
42–4020	Frame – Bag	8	6	1
42–4030	Bag Frame – Upper	8	2	1
44–0580	Shield – Trailing	2	33	1
46–5400	Shield – Front	1	31	1
46–5481	Cable – Traction	7	4	1
46–5520	Lever – Traction	7	3	1
46–5780	Switch – Starter	6	7	1
46–6434	Screw – Handle	7	2	1
46–6440	Cover – Control Cables	6	13	1
46–6810	Screw & Washer Assembly	1	7	1
46–6811	Screw & Washer Assembly	1	11	3
46–6980	Support – Cable	7	10	1
46–7030	Retainer – Cable	1	27	1
46–8090	Screw – Tapping	1	20	2
48–2060	Needle Bearing	4	21	2
49–1630	Support – Spacer	7	6	2
49–2040	Screw – Self Tapping	4	8	8
49–2750	Pin – Handle	6	22	2
52–7430	Control Bar Assembly	7	1	1
55–3760	Gear – Pinion 15 Tooth	4	47	1
55–3770	Gear – 49 Tooth 1st Gear	5	56	1
55–3780	Gear – Pinion 20 Tooth	4	48	1
55–3790	Gear – 44 Tooth 2nd Gear	5	55	1
55–3800	Gear – Pinion	5	49	1
55–3810	Gear – 39 Tooth 3rd Gear	5	54	1
55–7520	Battery Assembly	6	23	1
55–8180	Retainer – Battery	6	25	1
60–8710	Gear Case – Upper	5	59	1
60–8730	Cover – Gear Case	4	44	1
60–8750	Bushing – Int. Shaft	4	45	2
60–8770	Bushing – Output Shaft	4	43	1
60–8790	Sleeve – Gear	5	53	1
60–8800	Shaft – Intermediate	5	50	1
60–8810	Retainer – Shift Fork	4	38	1
60–8821	Lever – Shift	4	17	1
60–8840	Pulley – Half	4	10	2
60–8850	Bushing – Output Shaft	5	51	1
60–8870	Yoke – Shift	4	36	1
60–8890	Pinion – Bevel	5	57	1
62–3900	V–Belt	4	13	1
62–4320	Bracket – Belt Guide	4	7	1
62–6660	Spacer	4	9	1
62–6673	Gear Case Assembly	5	*	1
62–7540	Retainer – Blade	3	10	1
62–7550	Pulley – Driver	3	15	1
63–8360	Key – Ignition	6	8	1
63–8701	Pivot Arm Assembly	4	2	2
63–8720	Spring Arm Assembly	4	4	2
65–2720	Ring – Retaining	4	24	4
65–4710	Ring – Friction	4	25	2
65–4720	Spring	4	28	2
65–4730	Thrust Washer	4	22	2
65–4740	Thrust Washer	4	23	4
65–4750	Pinion	4	1	2
65–4760	Washer – Clutch	4	26	2
65–4770	Shaft – Output	4	18	1
65–5250	Clip – Spring	5	61	1
66–0560	Screw – Shoulder	2	36	2
66–0570	Guide – Belt	3	5	1
66–0580	Arm – Pivot	2	41	2
66–5350	Lever – Control	7	12	1
66–6040	Key – Rocker R.H.	4	*	1
66–6050	Key – Rocker L.H.	4	27	1
70–9760	Bushing	4	19	2
71–0560	Spring Arm Ass'y R.H.	1	1	1
71–0570	Spring Arm Assembly L.H.	2	43	1
71–9350	Bracket – Spring	1	10	1
74–1660	Cover – Wheel	4	29	2
74–1670	Spacer – Wheel Cover	4	33	2
74–3892	Control – Throttle	6	11	1
76–0760	Key – Shift	4	40	2
76–0770	Collar – Shift	4	41	1
76–0780	Sleeve – Shift Key	4	39	1
76–2712	Control – Ground Speed	6	2	1
76–4331	Cable – Brake	7	14	1
76–4570	Plate – Latch	1	19	1
76–4640	Latch – Plate	1	17	1
76–4650	Grip – Latch	1	16	1
76–4660	Spring – Door	1	12	1
77–0200	Door Assembly	1	14	1
77–0502	Discharge Plug Assembly	1	15	1
77–8952	Engine	3	3	1
77–9550	Cover – Brake	3	17	1
80–3770	Retainer – Door	1	13	1
80–4790	Harness – Wire	6	26	1
82–5530	Handle – Lower	6	1	1
82–5680	Bracket – Traction Adj.	1	26	1
82–8780	Cable – Retainer	4	15	1
82–9151	Tunnel – Discharge	1	9	1
82–9910	Cover – Belt	1	28	1
84–8330	Handle – Upper	6	3	1
84–8360	Latch – Handle L.H.	6	16	1
84–8400	Latch – Handle R.H.	6	30	1
86–7990	Screw – Clamp	3	2	1

*Not Illustrated

TORO PART NUMBER INDEX (Cont.)

Part No.	Description	Pg. No.	Ref. No.	Qty.
92–1599	Stiffener – Accelerator	3	12	1
92–1720	Plate – Kicker Right Front	1	3	1
92–1730	Plate – Kicker Left Front	1	4	1
92–1750	Plate – Kicker Left Rear	1	21	1
92–2289	Plate – Toro	3	8	1
92–7663	Cover – Wheel	2	50	1
92–7720	Guide – Rope	7	13	1
92–7856	Decal – H.O.C.	1	6	4
92–7858	Decal – Deck	2	45	1
92–7862	Decal – Toro	6	31	1
93–4355	Decal – Recoil	3	4	1
93–6655	Decal – Danger	6	4	1
93–6660	Decal – Instructions	6	5	1
93–6668	Decal – Charging Instructions	6	24	1
218–461	Nut – Hex	6	9	1
2210–249	Clamp – Throttle	3	1	1
2210–316	Stop – Rope	3	16	1
237–153	O–Ring	5	60	2
2412–50	Clip – Convoluted Tubing	6	12	3
2412–83	R–Clamp	1	30	1
2412–87	Clamp – Cable	1	23	1
302–56	Fitting – Grease	4	20	2
321–3	Screw – Hex Hd. Cap	7	11	1
321–52	Screw – Hex Hd. Cap	7	15	1
3253–22	Washer – Lock	3	13	1
3254–5	Washer – Lock	6	10	1
3256–22	Washer – Flat	7	9	1
3256–24	Washer – Flat	4	12	1
3272–10	Pin – Cotter	4	14	1
3290–378	Tie – Cable	6	14	5
3290–422	Nut – Push	8	1	2
3295–35	Rivet	1	18	1
3296–5	Locknut	4	11	1
3296–6	Locknut	4	34	2
3296–6	Nut – Lock	2	42	4
3296–29	Nut – Lock	6	20	3
3296–42	Nut – Lock	7	8	3
3296–47	Nut – Lock	6	21	3
3296–58	Locknut	7	5	2
32121–120	Pin – Coil	5	52	1
32144–70	Screw – Hex Washer Hd.	3	6	2
32144–70	Screw – Thread Forming	4	16	1
32144–70	Screw – Thread Forming	1	25	5
32144–85	Screw	4	35	2
32144–85	Screw – Thread Forming	2	44	2
32144–102	Screw – Thread Forming	3	7	3
32144–111	Screw – Plastite	1	5	6
32144–112	Screw – Self Tapping	1	29	1
32144–115	Screw – Self Tap Slotted	6	27	5

OPTIONAL EQUIPMENT

Side Discharge Chute Kit ..... Model No. 59110
Wear Plate Kit ..... Part No. 49–4080
Dethatcher Kit ..... Model No. 59131
Spark Arrestor ..... Part No. 77–9040

*Not Illustrated

PRODUCT CHANGES

In an effort to make improvements available to TORO owners as quickly as possible, minor changes are incorporated into Toro's products from time to time that do not become immediately shown in the Parts Catalog. If such a change has been made in your unit, which is not reflected in your manual, see your TORO Distributor or his Authorized TORO Service Dealer for information and part numbers.

COUNTRIES OTHER THAN THE UNITED STATES OR CANADA

Customers who have purchased TORO products exported from the United States or Canada should contact their Toro Distributor (Dealer) to obtain guarantee policies for your country, province or state. If for any reason you are dissatisfied with your Distributor's service or have difficulty obtaining guarantee information, contact the TORO importer. If all other remedies fail, you may contact us at The Toro Company.

MAINTENANCE RECORD

Date								

Compliance with Radio Interference Regulations Certified.
Certifie Conforme au Reglement sur le Brouillage Radioelectrique.

Litho in U.S.A.