FORM NO. 3317–332A

TORO®

MODEL NO. 03505–50001 & UP
MODEL NO. 03508–50001 & UP

PARTS CATALOG

5 BLADE & 8 BLADE CUTTING UNITS

For Reelmaster 5100D/5300D Traction Units

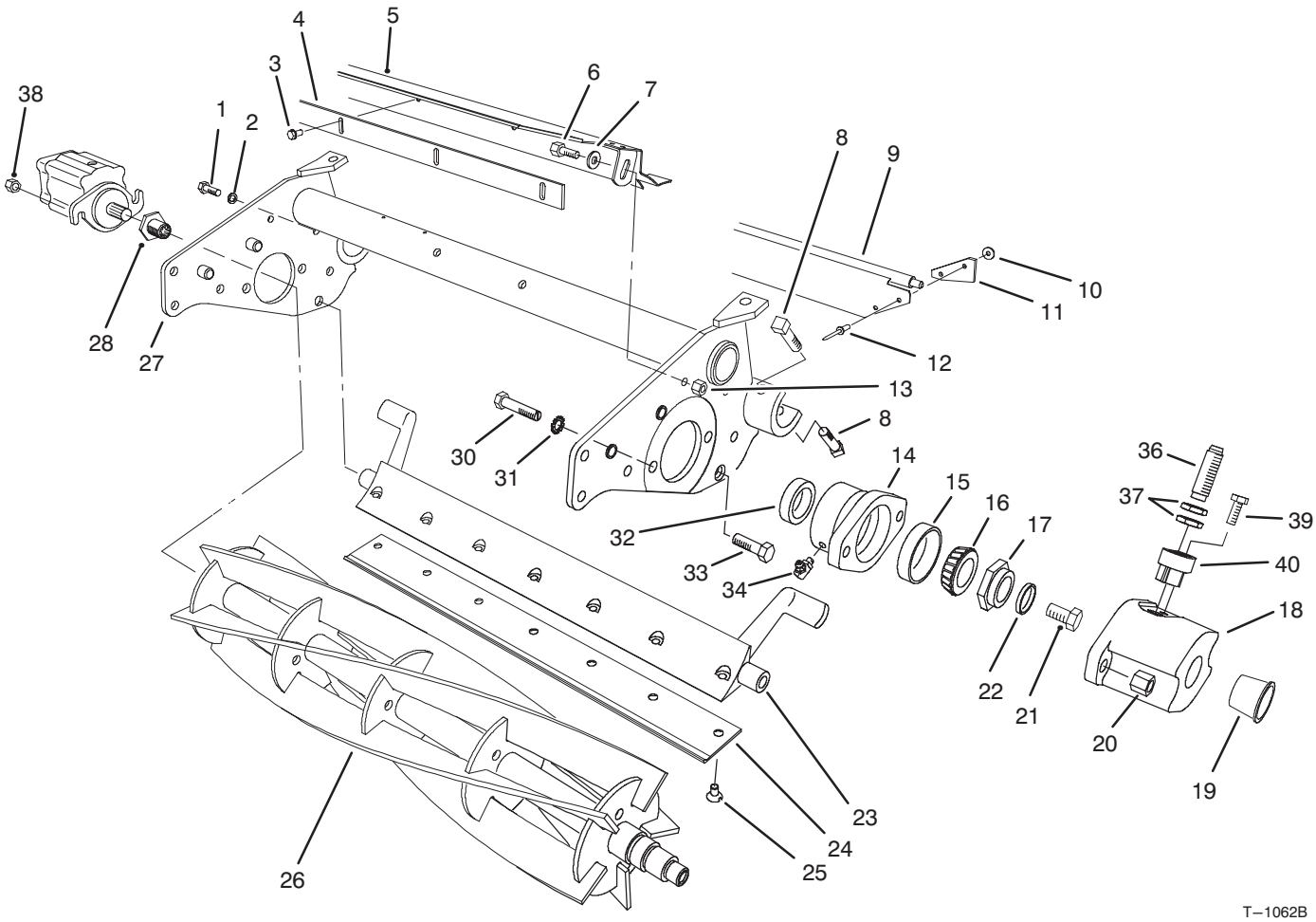

T–1062B

REEL ASSEMBLY

Ref. No.	Part No.	Description	No. Used
1	322–5	Screw – Cap Hex. Hd.	1
2	3253–4	Washer – Lock	1
3	32144–73	Screw – Self Tapping	5
4	36–7260	Bar – Cutoff	1
5	75–1840	Shield – Grass	1
6	321–4	Screw – Cap Hex. Hd.	2
7	3256–1	Washer – Flat	2
8	3243–13	Screw – Sq. Hd. Set	4
9	75–1560	Deflector – Rear	1
10	3256–49	Washer – Flat	4
11	75–1720	Flap – Rear Shield	2
12	3290–409	Rivet – Pop	4
13	3296–42	Nut – Lock	2
14	10–5120	Housing – Bearing	2
15	254–72	Cup – Bearing	2
16	254–94	Cone – Bearing	2

Ref. No.	Part No.	Description	No. Used
17	3296–60	Nut – Reel	1
18	10–5080	Cap – End	1
†18	93–8732	Cap – End	1
19	12–0450	Plug – Hole	1
†19	93–8717	Plug – Hole	1
20	3296–39	Nut – Lock L.H.	2
21	323–2	Screw – Cap Hex. Hd.	1
22	253–61	Seal – Oil	1
23	10–4930	Bedbar	1
24	63–8610	Bedknife	1
25	57–4910	Screw – Bedknife	7
26	14–0659	Reel – 5 Blade	1
*	14–0649	Reel – 8 Blade	1
27	75–6660	Frame – Cutting Unit	1
28	93–1394	Nut – Spline	1
30	57–3210	Screw – Special	4

*Not Illustrated
†Cutting Unit with Speed Sensor

© The TORO Company – 1995
All Rights Reserved

TPS

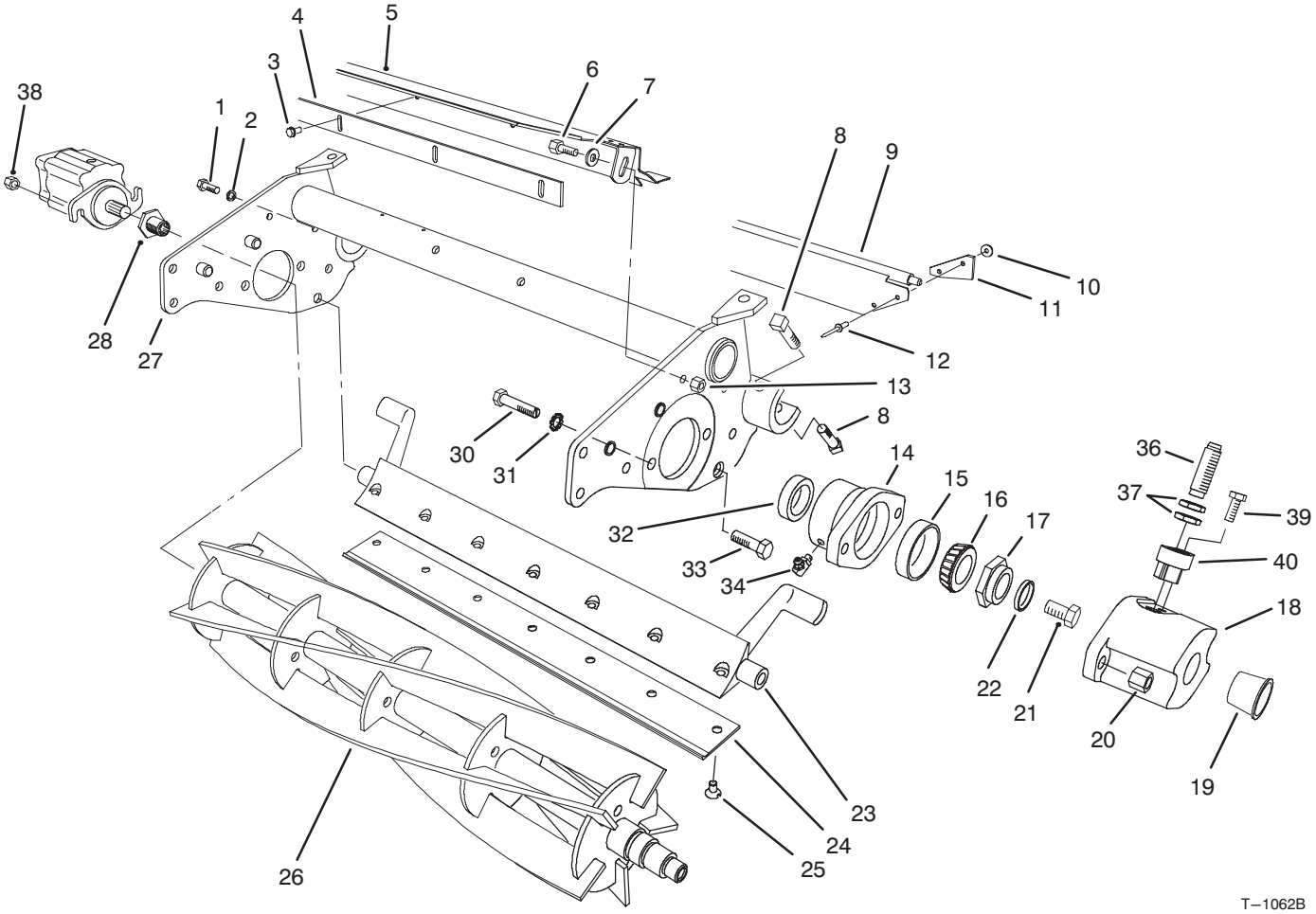

REEL ASSEMBLY (Continued)

Ref. No.	Part No.	Description	No. Used
31	3255–9	Washer – E.T.L.W.	4
32	253–96	Seal – Oil	2
33	217–74	Bolt – Bedbar	2
34	302–60	Fitting – Grease L.H. 90°	1
36	85–4390	Sensor Assembly (Incl. Ref. #37)	2

Ref. No.	Part No.	Description	No. Used
37		Nut – Jam	4
38	32128–36	Nut – Flange Lock R.H.	2
*	302–11	Fitting – Grease R.H. 45°	1
39	3235–20	Screw – Cap Hex. Hd.	1
40	92–4079	Housing – Sensor	1

*Not Illustrated

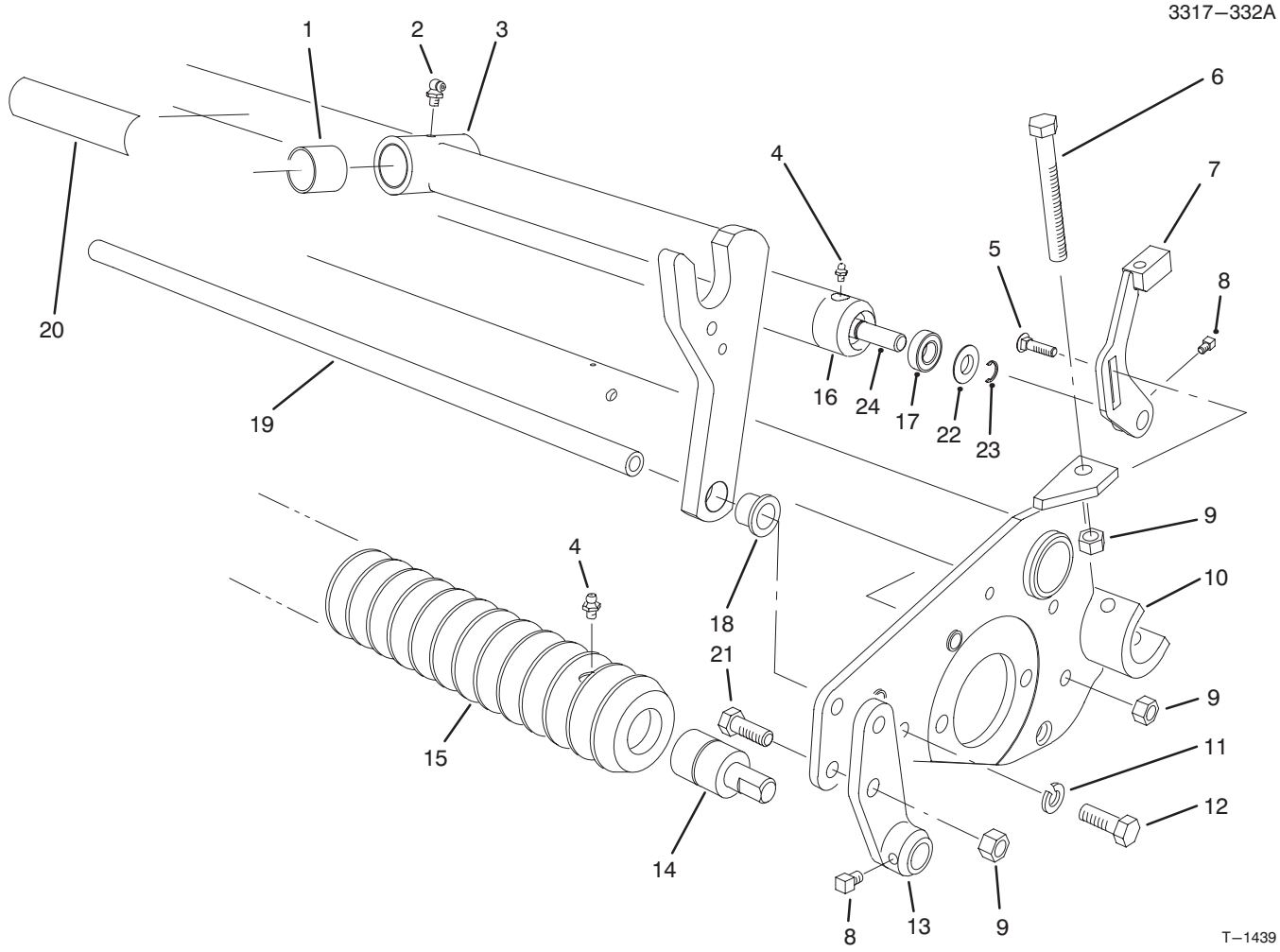

ROLLER ASSEMBLY

Ref. No.	Part No.	Description	No. Used
1	67–1750	Bushing – Sleeve	2
2	302–60	Fitting – Grease	1
3	75–1600	Carrier Frame Assembly (Incl. Ref. #1, 2 & 18)	1
4	302–5	Fitting – Grease	4
5	3231–2	Bolt – Carriage	2
6	323–49	Screw – Cap Hex. Hd.	2
7	75–1620	Bracket – HOC Rear L.H.	1
*	75–1610	Bracket – HOC Rear R.H.	1
8	3242–2	Screw – Sq. Hd. Set	4
9	3296–39	Nut – Lock	8
10	75–6660	Cutting Unit Frame Assy. (Incl. Ref. #11, 12 & 19)	1
11	3253–21	Washer – Lock	2
12	323–6	Screw – Cap Hex. Hd.	2
13	75–1980	Bracket – HOC Front L.H.	1
*	75–1960	Bracket – HOC Front R.H.	1
14	75–1290	Bearing Assembly	2
15	75–1520	Wiehle Roller Assembly (Incl. Ref. #4 & 14)	1

Ref. No.	Part No.	Description	No. Used
16	85–7220	Rear Roller Assembly (Incl. Ref. #4, 17 & 22–24)	1
17	85–9970	Bearing Assembly	2
18	75–2160	Bearing – Flange	2
19	75–1710	Support – Cutting Unit	1
20	67–7960	Decal – Warning (English)	1
*	84–4220	Decal – Warning (Japanese)	1
*	84–4210	Decal – Warning (Danish)	1
*	84–4200	Decal – Warning (Dutch)	1
*	84–4190	Decal – Warning (Italian)	1
*	84–4180	Decal – Warning (Spanish)	1
*	84–4170	Decal – Warning (German)	1
*	84–4160	Decal – Warning (French)	1
*	84–4150	Decal – Warning (Swedish)	1
21	323–7	Screw – Cap Hex. Hd.	4
22	85–7190	Washer – Shield	2
23	32151–12	Ring – Retaining	2
24	85–7180	Shaft – Roller	1

*Not Illustrated

MAINTENANCE RECORD

Date								