Form No. 3361-436 Rev B

TORO®

Count on it.

Operator's Manual

TX 427 Compact Utility Loader

Model No. 22321—Serial No. 290000001 and Up

Model No. 22321G—Serial No. 290000001 and Up

Model No. 22322—Serial No. 290000001 and Up

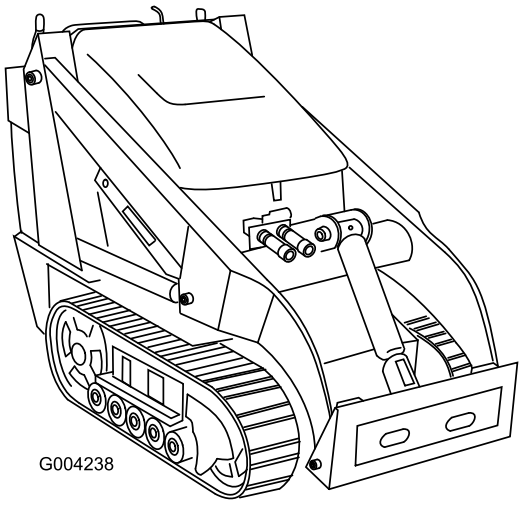

G004238

CE

To register your product or download an *Operator's Manual* or *Parts Catalog* at no charge, go to www.Toro.com.

Original Instructions (EN)

Warning

CALIFORNIA
Proposition 65 Warning

The engine exhaust from this product contains chemicals known to the State of California to cause cancer, birth defects, or other reproductive harm.

Because in some areas there are local, state, or federal regulations requiring that a spark arrester be used on the engine of this machine, a spark arrester is available as an option. If you require a spark arrestor, contact your Authorized Service Dealer.

Genuine Toro spark arresters are approved by the USDA Forestry Service.

Important: It is a violation of California Public Resource Code Section 4442 to use or operate the engine on any forest-covered, brush-covered, or grass-covered land without a spark arrester muffler maintained in working order, or the engine constricted, equipped, and maintained for the prevention of fire. Other states or federal areas may have similar laws.

This spark ignition system complies with Canadian ICES-002.

The enclosed *Engine Owner's Manual* is supplied for information regarding the US Environmental Protection Agency (EPA) and the California Emission Control Regulation of emission systems, maintenance, and warranty. Replacements may be ordered through the engine manufacturer.

Introduction

Read this information carefully to learn how to operate and maintain your product properly and to avoid injury and product damage. You are responsible for operating the product properly and safely.

You may contact Toro directly at www.Toro.com for product and accessory information, help finding a dealer, or to register your product.

Whenever you need service, genuine Toro parts, or additional information, contact an Authorized Service Dealer or Toro Customer Service and have the model and serial numbers of your product ready. Figure 1 identifies the location of the model and serial numbers on the product. Write the numbers in the space provided.

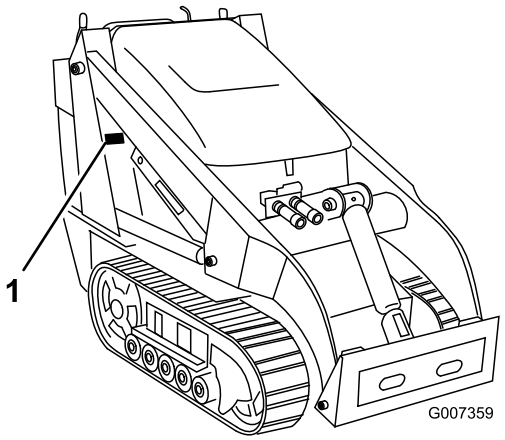

Figure 1

1. Model and serial number location

Model No. _____

Serial No. _____

This manual identifies potential hazards and has safety messages identified by the safety alert symbol (Figure 2), which signals a hazard that may cause serious injury or death if you do not follow the recommended precautions.



Figure 2

1. Safety alert symbol

This manual uses 2 other words to highlight information. **Important** calls attention to special mechanical information and **Note** emphasizes general information worthy of special attention.

© 2008—The Toro® Company
8111 Lyndale Avenue South
Bloomington, MN 55420

Contact us at www.Toro.com.
Printed in the USA.
All Rights Reserved

Contents

Introduction 2
Safety 4
- Safe Operating Practices 4
- Sound Pressure 6
- Sound Power 6
- Vibration 6
- Stability Data 7
- Slope Indicator 8
- Safety and Instructional Decals 9

Product Overview 12
- Controls 12
- Specifications 15
- Attachments/Accessories 15

Operation 16
- Adding Fuel 16
- Checking the Engine Oil Level 17
- Checking the Hydraulic Fluid Level 17
- Starting and Stopping the Engine 18
- Stopping the Traction Unit 18
- Moving a Non-functioning Traction Unit 18
- Using the Cylinder Lock 19
- Using Attachments 19
- Securing the Traction Unit for Transport 21
- Lifting the Traction Unit 21

Maintenance 22
- Recommended Maintenance Schedule(s) 22
- Premaintenance Procedures 23
  - Opening the Hood 23
  - Closing the Hood 23
  - Opening the Rear Access Cover 23
  - Closing the Rear Access Cover 24
  - Removing the Side Screens 24
  - Installing the Side Screens 24
  - Removing the Front Screen 24
- Lubrication 25
  - Greasing the Traction Unit 25
- Engine Maintenance 26
  - Servicing the Air Cleaner 26
  - Servicing the Engine Oil 27
  - Servicing the Spark Plugs 28
- Fuel System Maintenance 29
  - Changing the Fuel Filter 29
  - Draining the Fuel Tank 30
- Electrical System Maintenance 30
  - Servicing the Battery 30
- Drive System Maintenance 32
  - Servicing the Tracks 32
- Belt Maintenance 35
  - Inspecting/Replacing the Drive Belt 35
- Controls System Maintenance 37
  - Adjusting the Traction Control Alignment 37
  - Adjusting the Traction Control Neutral Position 37
  - Adjusting the Tracking of the Traction Control, Full Forward Position 38
- Hydraulic System Maintenance 39
  - Replacing the Hydraulic Filter 39
  - Changing the Hydraulic Fluid 39
  - Checking the Hydraulic Lines 40
- Cleaning 41
  - Removing Debris from the Traction Unit 41
  - Cleaning the Chassis 41

Storage 43
Troubleshooting 44
Schematics 45

Safety

Improper use or maintenance by the operator or owner can result in injury. To reduce the potential for injury, comply with these safety instructions and always pay attention to the safety alert symbol , which means: *Caution*, *Warning*, or *Danger*—personal safety instruction. Failure to comply with the instruction may result in personal injury or death.

Safe Operating Practices

This product is capable of amputating hands and feet. Always follow all safety instructions to avoid serious injury or death.

Engine exhaust contains carbon monoxide, an odorless, deadly poison that can kill you.

Do not run the engine indoors or in an enclosed area.

Training

- Read the *Operator's Manual* and other training material. If the operator(s) or mechanic(s) can not read English, it is the owner's responsibility to explain this material to them.
- Become familiar with the safe operation of the equipment, operator controls, and safety signs.
- All operators and mechanics should be trained. The owner is responsible for training the users.
- Never let children or untrained people operate or service the equipment. Local regulations may restrict the age of the operator.
- The owner/user can prevent and is responsible for accidents or injuries occurring to himself or herself, other people or property.

Preparation

- Evaluate the terrain to determine what accessories and attachments are needed to properly and safely perform the job. Only use accessories and attachments approved by the manufacturer.
- Wear appropriate clothing including hard hat, safety glasses, long pants, safety shoes, and hearing protection. Long hair, loose clothing or jewelry may get tangled in moving parts.
- Inspect the area where the equipment is to be used and remove all objects such as rocks, toys, and wire which can be thrown by the machine.
- Use extra care when handling gasoline and other fuels. They are flammable and vapors are explosive.
  - Use only an approved container
  - Never remove the gas cap or add fuel with the engine running. Allow the engine to cool before refueling. Do not smoke.
  - Never refuel or drain the machine indoors.
- Check that the operator's presence controls, safety switches, and shields are attached and functioning properly. Do not operate unless they are functioning properly.

Operation

- Never run an engine in an enclosed area.
- Only operate in good light, keeping away from holes and hidden hazards.
- Be sure all drives are in neutral and parking brake is engaged before starting the engine. Only start the engine from the operator's position.
- Slow down and use extra care on hillsides. Be sure to travel in the recommended direction on hillsides. Turf conditions can affect the machine's stability.
- Slow down and use caution when making turns and when changing directions on slopes.
- Never operate with the guards not securely in place. Be sure all interlocks are attached, adjusted properly, and functioning property.
- Do not change the engine governor setting or overspeed the engine.
- Stop on level ground, lower implements, disengage the auxiliary hydraulics, engage parking brake, shut off the engine before leaving the operator's position for any reason.
- Keep hands and feet away from moving attachments.
- Look behind and down before backing up to be sure of a clear path.
- Never carry passengers and keep pets and bystanders away.
- Slow down and use caution when making turns and crossing roads and sidewalks.
- Do not operate the machine under the influence of alcohol or drugs.
- Use care when loading or unloading the machine into a trailer or truck.
- Use care when approaching blind corners, shrubs, trees, or other objects that may obscure vision.

- Read all attachment manuals.
- Ensure that the area is clear of other people before operating the traction unit. Stop the traction unit if anyone enters the area.
- Never leave a running traction unit unattended. Always lower the loader arms, stop the engine, set the parking brake, and remove the key before leaving.
- Do not exceed the rated operating capacity, as the traction unit may become unstable which may result in loss of control.
- Do not carry a load with the arms raised. Always carry loads close to the ground.
- Do not over-load the attachment and always keep the load level when raising the loader arms. Logs, boards, and other items could roll down the loader arms, injuring you.
- Never jerk the controls; use a steady motion.
- Watch for traffic when operating near or crossing roadways.
- Do not touch parts which may be hot from operation. Allow them to cool before attempting to maintain, adjust, or service.
- Check for overhead clearances (i.e. branches, doorways, electrical wires) before driving under any objects and do not contact them.
- Ensure that you operate the traction unit in areas where there are no obstacles in close proximity to the operator. Failure to maintain adequate distance from trees, walls, and other barriers may result in injury as the traction unit backs up during operation if the operator is not attentive to the surroundings. Only operate the unit in areas where there is sufficient clearance for the operator to safely maneuver the product.
- Before digging, have the area marked for underground utilities, and do not dig in marked areas.
- Locate the pinch point areas marked on the traction unit and attachments and keep hands and feet away from these areas.
- Before operating the traction unit with an attachment, ensure that the attachment is properly installed.

Slope Operation

Slopes are a major factor related to loss-of-control and tip-over accidents, which can result in severe injury or death. All slopes require extra caution.

- Do not operate the traction unit on hillsides or slopes exceeding the angles recommended in the Stability Data section and those in the attachment *Operator's Manual.* See also the , page .
- **Operate up and down slopes with the heavy end of the traction unit uphill.** Weight distribution changes. An empty bucket will make the rear of the traction unit the heavy end, and a full bucket will make the front of the traction unit the heavy end. Most other attachments will make the front of traction unit the heavy end.
- Raising the loader arms on a slope will affect the stability of the machine. Whenever possible, keep the loader arms in the lowered position when on slopes.
- Removing an attachment on a slope will make the rear of the traction unit heavy. Refer to the Stability Data section to determine whether the attachment can be safely removed on the slope.
- Remove obstacles such as rocks, tree limbs, etc. from the work area. Watch for holes, ruts, or bumps, as uneven terrain could overturn the traction unit. Tall grass can hide obstacles.
- Use only Toro-approved attachments. Attachments can change the stability and the operating characteristics of the traction unit. Warranty may be voided if used with unapproved attachments.
- Keep all movements on slopes slow and gradual. Do not make sudden changes in speed or direction.
- Avoid starting or stopping on a slope. If the traction unit loses traction, proceed slowly, straight down the slope.
- Avoid turning on slopes. If you must turn, turn slowly and keep the heavy end of the traction unit uphill.
- Do not operate near drop-offs, ditches, or embankments. The traction unit could suddenly turn over if a track goes over the edge of a cliff or ditch, or if an edge caves in.
- Do not operate on wet grass. Reduced traction could cause sliding.
- Do not park the traction unit on a hillside or slope without lowering the attachment to the ground, setting the parking brake, and chocking the tracks.

Maintenance and Storage

- Disengage the auxiliary hydraulics, lower the attachment, set the parking brake, stop the engine, and remove the key. Wait for all movement to stop before adjusting, cleaning, or repairing.
- Clean debris from attachments, drives, mufflers, and engine to help prevent fires. Clean up oil or fuel spillage.

- Let the engine cool before storing and do not store near flame.
- Do not store fuel near flames or drain indoors.
- Park the machine on level ground. Never allow untrained personnel to service the machine.
- Use jack stands to support components when required.
- Carefully release pressure from components with stored energy.
- Disconnect the battery or remove the spark plug wires before making any repairs. Disconnect the negative terminal first and the positive last. Reconnect positive first and negative last.
- Keep hands and feet away from moving parts. If possible, do not make adjustments with the engine running.
- Charge batteries in an open well ventilated area, away from spark and flames. Unplug the charger before connecting or disconnecting it from the battery. Wear protective clothing and use insulated tools.
- Keep all parts in good working condition and all hardware tightened. Replace all worn or damaged decals.
- If any maintenance or repair requires the loader arms to be in the raised position, secure the arms in the raised position with the hydraulic cylinder lock.
- Secure the loader arm valve with the loader valve lock anytime you need to stop the machine with the loader arms raised.
- Keep nuts and bolts tight. Keep equipment in good condition.
- Never tamper with safety devices.
- Keep the traction unit free of grass, leaves, or other debris build-up. Clean up oil or fuel spillage. Allow the traction unit to cool before storing.
- Use extra care when handling gasoline and other fuels. They are flammable and vapors are explosive.
  - Use only an approved container.
  - Never remove the gas cap or add fuel when the engine is running. Allow the engine to cool before refueling. Do not smoke.
  - Never refuel the traction unit indoors.
  - Never store the traction unit or fuel container inside where there is an open flame, such as near a water heater or furnace.
  - Never fill a container while it is inside a vehicle, trunk, pick-up bed, or any surface other than the ground.
  - Keep container nozzle in contact with the tank during filling.
- Stop and inspect the equipment if you strike an object. Make any necessary repairs before restarting.
- Use only genuine Toro replacement parts to ensure that original standards are maintained.
- Battery acid is poisonous and can cause burns. Avoid contact with skin, eyes, and clothing. Protect your face, eyes, and clothing when working with a battery.
- Battery gases can explode. Keep cigarettes, sparks and flames away from the battery.
- Keep your body and hands away from pin hole leaks or nozzles that eject high pressure hydraulic fluid. Use cardboard or paper to find hydraulic leaks; never use your hands. Hydraulic fluid escaping under pressure can penetrate skin and cause injury requiring surgery within a few hours by a qualified surgeon or gangrene may result.

Sound Pressure

This unit has a maximum sound pressure level at the operator's ear of 90 dBA, based on measurements of identical machines per ISO 11201.

Sound Power

This unit has a guaranteed sound power level of 103 dBA, based on measurements of identical machines per EN 6395.

Vibration

This unit does not exceed a hand/arm vibration level of 1.1 m/s^2, based on measurements of identical machines per EN 1033.

Stability Data

The following tables list the maximum slope recommended for the traction unit in the positions listed in the tables. Slopes over the listed degree may cause the traction unit to become unstable. The data in the tables assume that the loader arms are fully lowered; raised arms may affect the stability.

In each attachment manual is a set of three stability ratings, one for each hill position. To determine the maximum slope you can traverse with the attachment installed, find the degree of slope that corresponds to the stability ratings of the attachment. Example: If the attachment installed on a TX 427 traction unit has a Front Uphill rating of B, a Rear Uphill rating of D, and a Side Uphill rating of C, then you could drive forward up a 20° slope, rearward up a 12° slope, or sideways on a 14° slope, as listed in the following table for the TX 427 traction unit.

Model 22321 and 22321G			
	Maximum Recommended Slope when Operating with:		
Configuration	**Front Uphill** 	**Rear Uphill** 	**Side Uphill** 
Traction unit without attachment	11°	21°	19°
Traction unit with an attachment rated with one of the following stability ratings for each slope position:*			
A	25°	25°	20°
B	20°	20°	18°
C	17°	17°	14°
D	10°	12°	9°
E	5°	5°	5°

Model 22322			
	Maximum Recommended Slope when Operating with:		
Configuration	**Front Uphill** 	**Rear Uphill** 	**Side Uphill** 
Traction unit without attachment	12°	20°	23°
Traction unit with an attachment rated with one of the following stability ratings for each slope position:*			
A	25°	25°	25°
B	22°	22°	22°
C	18°	16°	16°
D	10°	10°	10°
E	5°	5°	5°

Slope Indicator

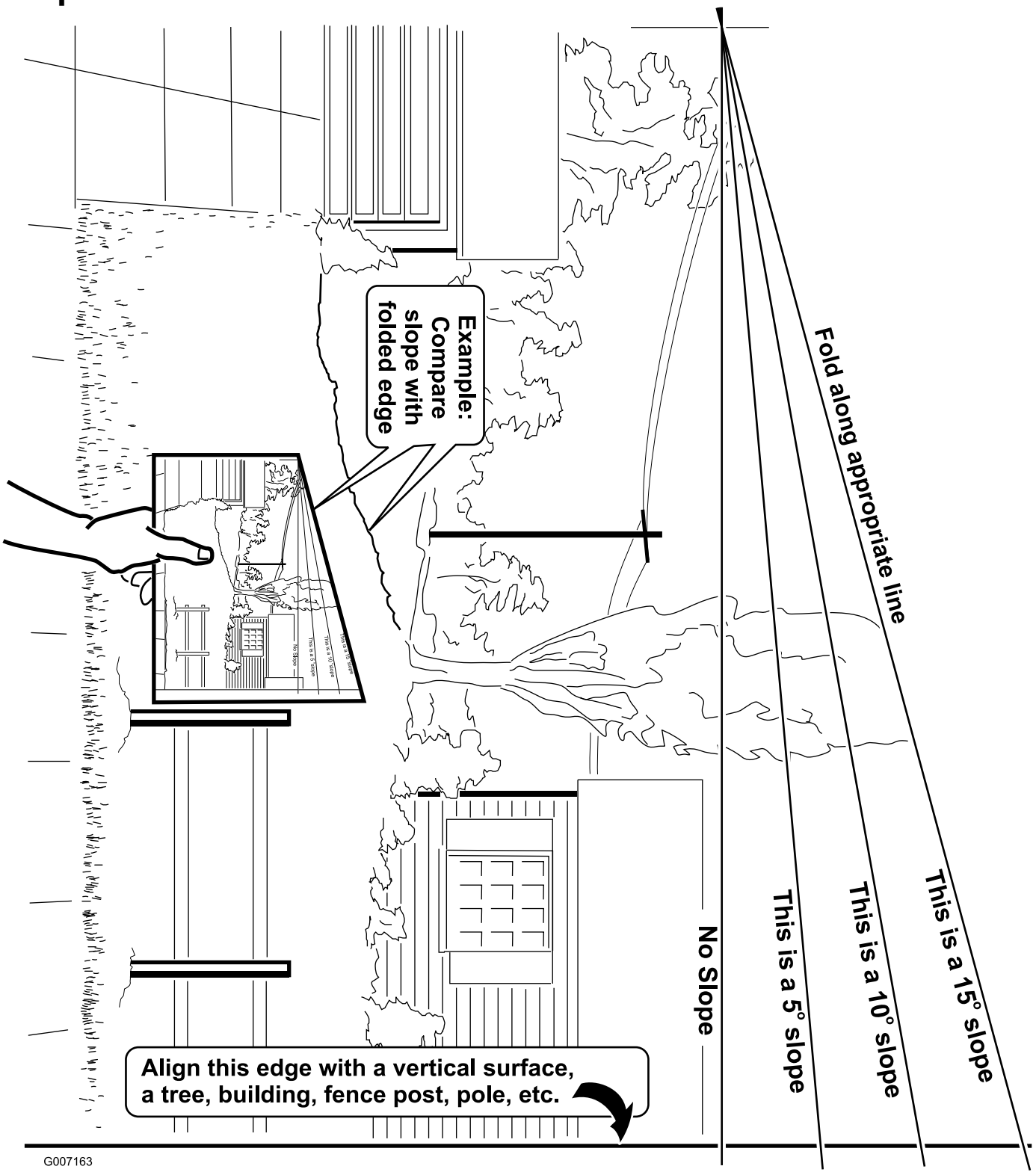

Safety and Instructional Decals

Safety decals and instructions are easily visible to the operator and are located near any area of potential danger. Replace any decal that is damaged or lost.

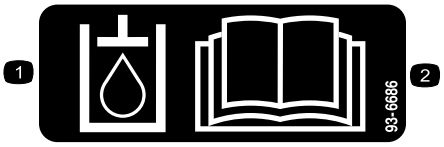

93-6686

1. Hydraulic oil
2. Read the *Operator's Manual.*

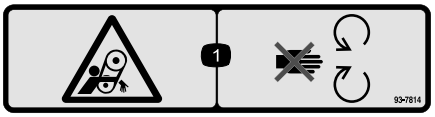

93-7814

1. Entanglement hazard, belt—stay away from moving parts.

93-9084

1. Lift point
2. Tie-down point

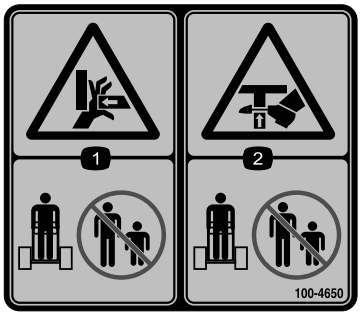

100-4650

1. Crushing hazard of hand—keep bystanders a safe distance from the machine.
2. Crushing hazard of foot—keep bystanders a safe distance from the machine.



100-8821

1. Crushing hazard and cutting hazard of hand—stay a safe distance from the front of the traction unit when the loader arms are raised.

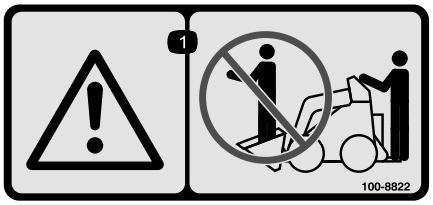

100-8822

1. Warning—do not carry passengers.

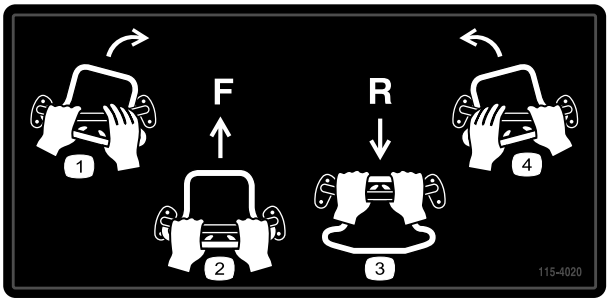

115-4020

1. Turn right
2. Forward
3. Reverse
4. Turn left

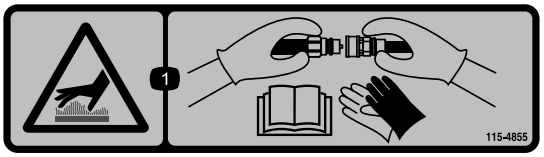

115-4855

1. Hot surface/burn hazard—wear protective gloves when handling the hydraulic couplers and read the *Operator's Manual* for information on handling hydraulic components.

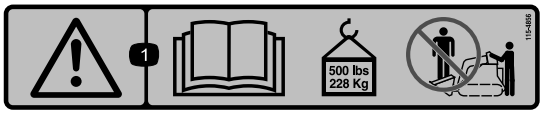

115-4856

1. Warning—read the *Operator's Manual*; maximum load rating of 500 lb (228 Kg); no riders.

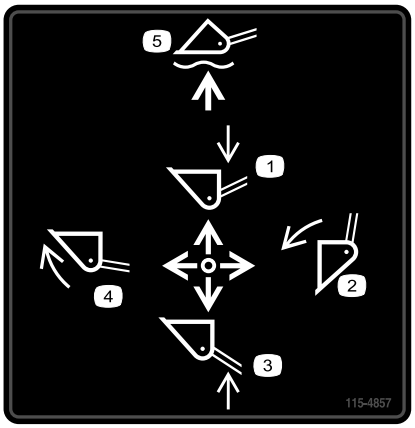

115-4857

1. Lower the loader arms.
2. Dump the bucket.
3. Raise the loader arms.
4. Curl the bucket.
5. Float the bucket on the ground.



115-4858

1. Crushing hazard of hands or feet—install the cylinder lock.



115-4859

1. Disengaged
2. Parking brake
3. Engaged

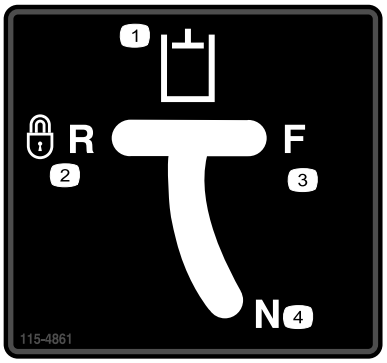

115-4861

1. Auxiliary hydraulics
2. Locked reverse (detent)
3. Forward
4. Neutral (off)

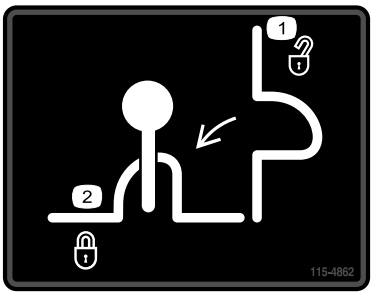

115-4862

1. Loader valve lock, unlocked
2. Loader valve lock, locked



115-4882

1. Warning—stay a safe distance from the hot surfaces.

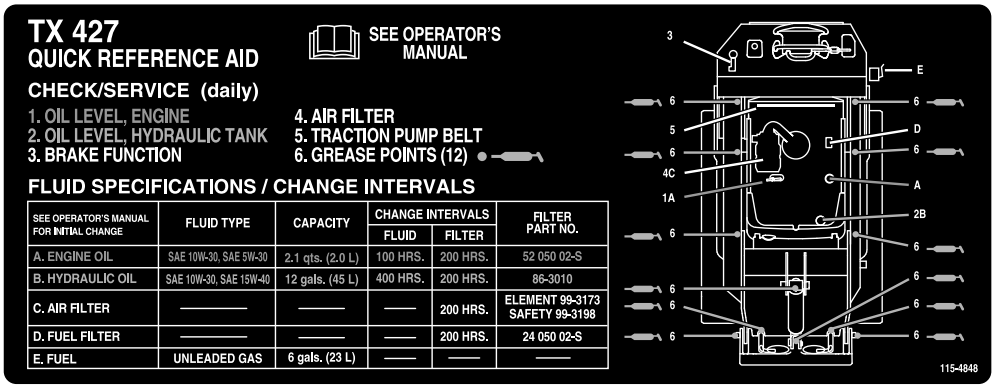

115-4848

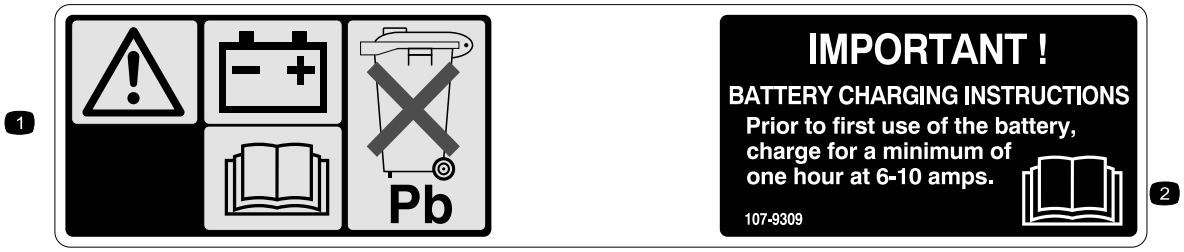

107-9309

1. Warning—read the *Operator's Manual* for information on charging the battery; contains lead; do not discard.
2. Read the *Operator's Manual*.

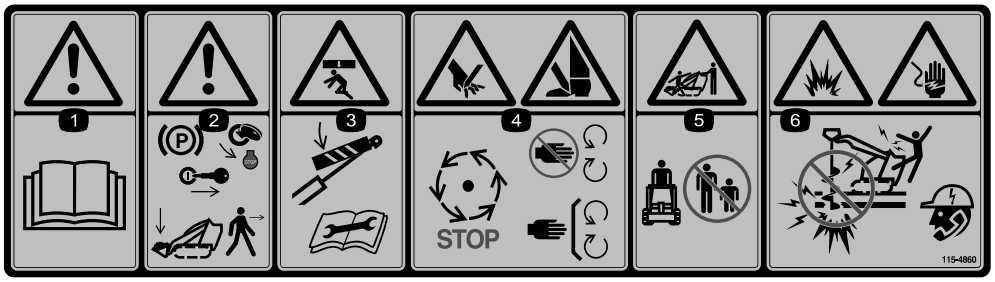

115-4860

1. Warning—read the *Operator's Manual.*
2. Warning—set the parking brake, stop the engine, remove the ignition key and lower the loader arms before leaving the machine.
3. Crushing hazard—install the cylinder lock and read the instructions before servicing or performing maintenance.
4. Cutting hazard of hands or feet—wait for all moving parts to stop; stay away from moving parts; keep all guards and shields in place.
5. Crushing/dismemberment hazard of bystanders—keep bystanders a safe distance from the machine.
6. Explosion and electric shock hazard—do not dig in areas with buried gas or electrical lines; contact local power organizations before digging.

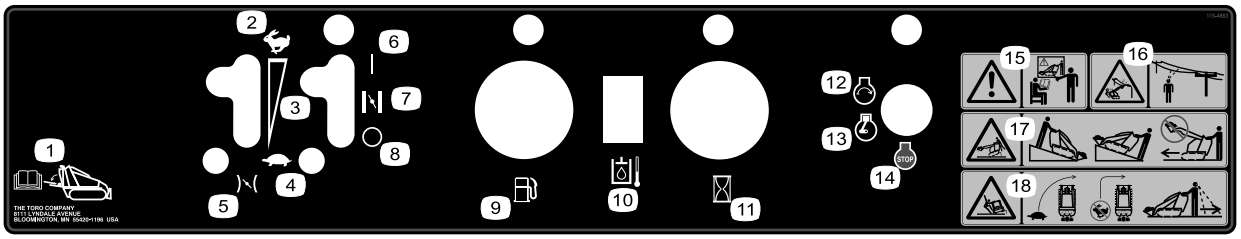

115-4863

1. Read the *Operator's Manual*, located inside the rear access cover.
2. Fast
3. Continuous variable setting
4. Slow
5. Throttle
6. On
7. Choke
8. Off
9. Fuel
10. Hydraulic oil temperature
11. Hour meter/tachometer
12. Engine—start
13. Engine—run
14. Engine—stop
15. Warning— do not operate this machine unless you are trained.
16. Electric shock hazard, overhead power lines—stay away from overhead power lines.
17. Tipping hazard—move the traction unit with the heavy end up hill; do not travel with the loader arms raised.
18. Tipping hazard—slow the traction unit when turning, do not travel fast when turning, look behind and down when reversing.

Product Overview

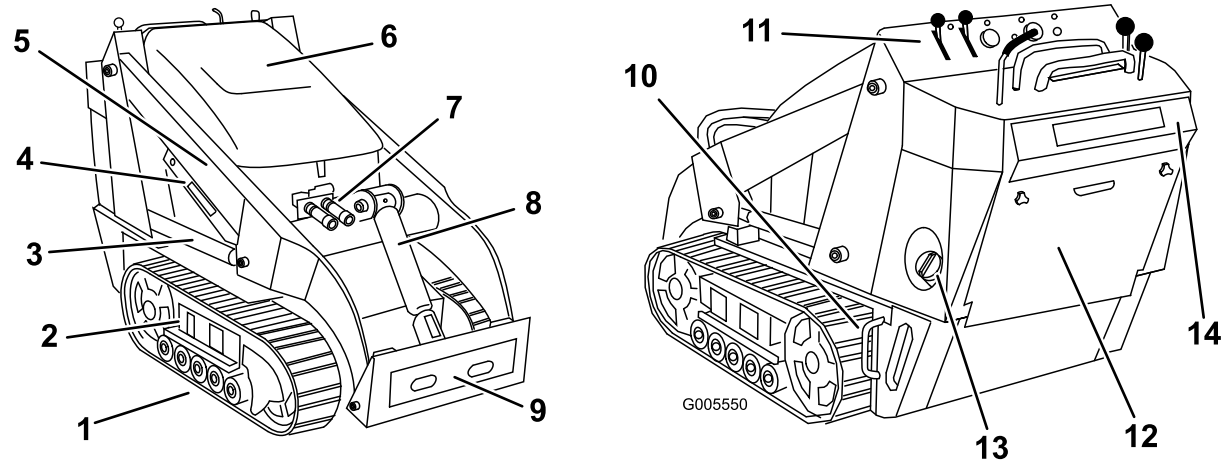

Figure 3

1. Track
2. Track adjustment chamber
3. Lift cylinder
4. Cylinder lock
5. Loader arms
6. Hood
7. Auxiliary hydraulic couplers
8. Tilt cylinder
9. Mount plate
10. Tie-down/lift loop
11. Control panel
12. Rear access cover
13. Fuel tank
14. Reverse safety plate

Controls

Become familiar with all the controls (Figure 4) before you start the engine and operate the traction unit.

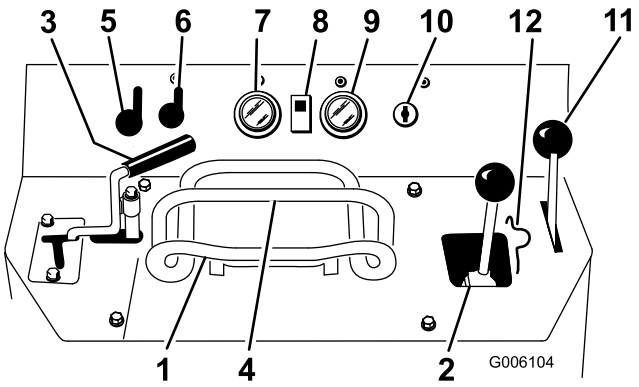

Figure 4

1. Traction control
2. Loader arm/attachment tilt lever
3. Auxiliary hydraulics lever
4. Reference bar
5. Throttle lever
6. Choke lever
7. Fuel gauge
8. Hydraulic oil temperature light
9. Hour meter/tachometer
10. Key switch
11. Parking brake lever
12. Loader valve lock

Key Switch

The key switch, used to start and stop the engine, has three positions: off, run, and start.

To start the engine, rotate the key to the start position. Release the key when engine starts and it will move automatically to the run position.

To stop the engine, rotate the key to the off position.

Throttle Lever

Move the control forward to increase the engine speed and rearward to decrease speed.

Choke Lever

Before starting a cold engine, move the choke lever forward. After the engine starts, regulate the choke to keep the engine running smoothly. As soon as possible, move the choke lever all the way rearward.

Note: A warm engine requires little or no choking.

Reference Bar

When driving the traction unit, use the reference bar as a handle and a leverage point for controlling the traction control and the auxiliary hydraulics lever. To ensure smooth, controlled operation, do not take both hands off of the reference bar while operating the traction unit.

Traction Control

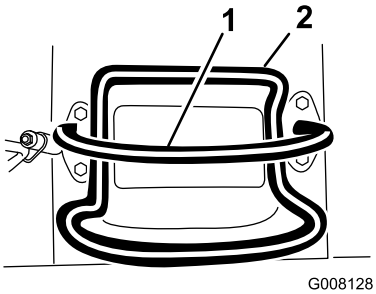

Figure 5

1. Reference bar (does not move to give you a reference point and a fixed handle to hold while operating the traction unit)
2. Traction control (moves to control the machine)

- To move forward, move the traction control forward (Figure 6).

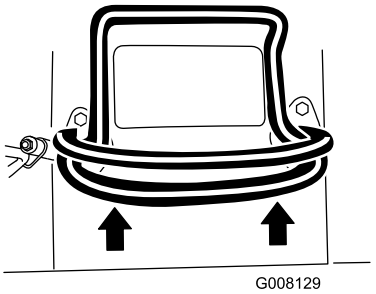

Figure 6

- To move rearward, move the traction control rearward (Figure 7). **When reversing, look behind for obstructions and keep your hands on the reference bar (Figure 6).**

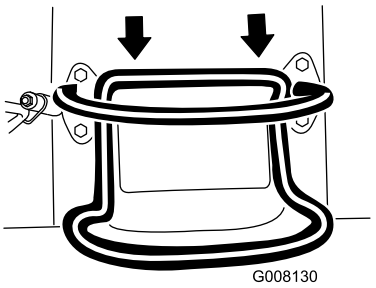

Figure 7

- To turn right, rotate the traction control clockwise (Figure 8).

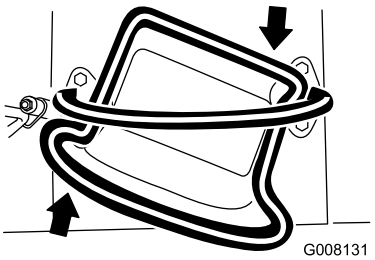

Figure 8

- To turn left, rotate the traction control counterclockwise (Figure 9).

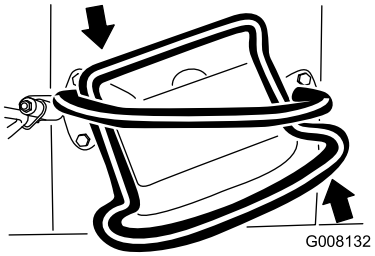

Figure 9

- To stop, release the traction control (Figure 5).

Note: The farther you move the traction control in any direction, the faster the machine will move in that direction.

Loader Arm/Attachment Tilt Lever

To tilt the attachment forward, slowly move the lever to the right (Figure 10).

To tilt the attachment rearward, slowly move the lever to the left (Figure 10).

To lower the loader arms, slowly move the lever forward (Figure 10).

To raise the loader arms, slowly move the lever rearward (Figure 10).

You can also push the lever fully forward into a detent position (Figure 10) to release the loader arms so that the attachment rests on the ground. This allows attachments such as the leveler and the hydraulic blade to follow the contours of the ground (i.e., float) when grading.

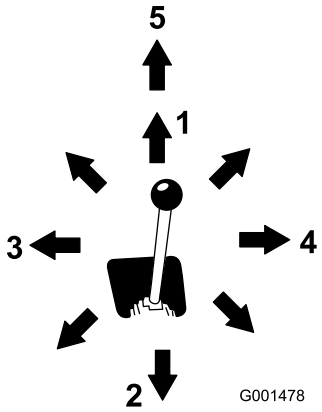

Figure 10

1. Lower the loader arms
2. Raise the loader arms
3. Tilt the attachment rearward
4. Tilt the attachment forward
5. Detent (Float) position

By moving the lever to an intermediate position (such as, forward and left), you can move the loader arms and tilt the attachment at the same time.

Loader Valve Lock

The loader valve lock secures the loader arm/attachment tilt lever so that you cannot push it forward. This helps to ensure that no one will accidentally lower the loader arms during maintenance. Secure the loader arms with the lock anytime you need to stop the machine with the loader arms raised.

To set the lock, lift up on it so it clears the hole in the control panel and swing it to the left in front of the loader arm lever, pushing it down into the locked position (Figure 11).

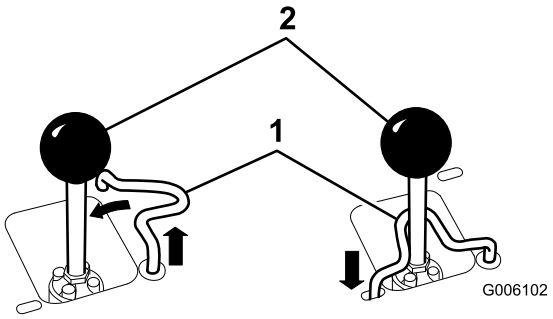

Figure 11

1. Loader valve lock
2. Loader arm/attachment tilt lever

Auxiliary Hydraulics Lever

To operate a hydraulic attachment in the forward direction, rotate the auxiliary hydraulics lever rearward and pull it down to the reference bar (Figure 12, number 1).

To operate a hydraulic attachment in reverse direction, rotate the hydraulics lever rearward, then move it left into the upper slot (Figure 12, number 2).

If you release the lever while in the forward position, the lever will automatically return to the neutral position (Figure 12, number 3). If it is in the reverse position, it will remain there until you pull it out of the slot.

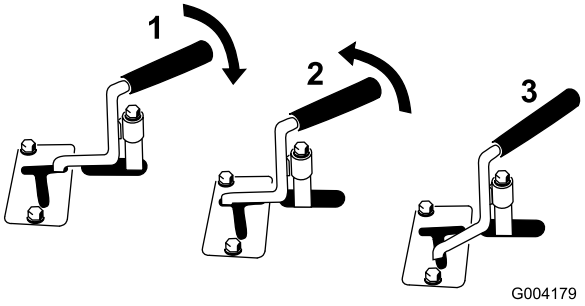

Figure 12

1. Forward flow hydraulics
2. Reverse flow hydraulics
3. Neutral

Parking Brake Lever

To set the parking brake, push the brake lever forward and to the left and then pull it rearward (Figure 13).

Note: The traction unit may roll slightly before the brakes engage in the drive sprocket.

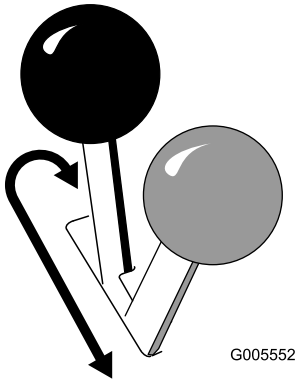

Figure 13

To release the brake, push the lever forward and then right, into the notch.

Fuel Gauge

This gauge measures the amount of fuel in the fuel tank.

Hydraulic Oil Temperature Light

If the hydraulic oil gets too hot, this light illuminates and an audible alarm sounds. If this happens, stop the engine and allow the traction unit to cool.

Hour Meter/Tachometer

When the engine is off, the hour meter/tachometer displays the number of hours of operation that have been logged on the traction unit. When the engine is running, it displays the speed of the engine in revolutions per minute (rpm).

After 50 hours and then every 100 hours thereafter (that is at 150, 250, 350, etc.) the screen displays CHG OIL to remind you to change the engine oil. After every 100 hours, the screen displays SVC to remind you to perform the other maintenance procedures based on a 100, 200, or 400 hour schedule. These reminders come on starting three hours prior to the service interval time and flash at regular intervals for six hours.

Specifications

Note: Specifications and design are subject to change without notice.

Model 22321 and 22321G

Width	34 inches (86 cm)
Length	71 inches (180 cm)
Height	46 inches (117 cm)
Weight	1880 lb (853 Kg)
Operating capacity	500 lb (227 Kg)
Tipping capacity	1480 lb (671 Kg)
Wheelbase	31.2 inches (79 cm)
Dump height (with narrow bucket)	47 inches (119 cm)
Reach—fully raised (with narrow bucket)	22 inches (55 cm)
Height to hinge pin (narrow bucket in highest position)	66 inches (168 cm)

Model 22322

Width	41 inches (104 cm)
Length	71 inches (180 cm)
Height	46 inches (117 cm)
Weight	2075 lb (941 Kg)
Operating capacity	500 lb (227 Kg)
Tipping capacity	1427 lb (647 Kg)
Wheelbase	31.2 inches (79 cm)
Dump height (with narrow bucket)	47 inches (119 cm)
Reach—fully raised (with narrow bucket)	22 inches (55 cm)
Height to hinge pin (narrow bucket in highest position)	66 inches (168 cm)

Attachments/Accessories

A selection of Toro approved attachments and accessories are available for use with the machine to enhance and expand its capabilities. Contact your Authorized Service Dealer or Distributor or go to www.Toro.com for a list of all approved attachments and accessories.

Important: Use only Toro approved attachments. Other attachments may create an unsafe operating environment or damage the traction unit.

Operation

Note: Determine the left and right sides of the machine from the normal operating position.

Important: Before operating, check the fuel and oil level, and remove debris from the traction unit. Also, ensure that the area is clear of people and debris. You should also know and have marked the locations of all utility lines.

Adding Fuel

Use unleaded gasoline (87 pump octane minimum). Leaded, regular gasoline may be used if unleaded is not available.

In certain conditions, gasoline is extremely flammable and highly explosive. A fire or explosion from gasoline can burn you and others and can damage property.

- **Fill the fuel tank outdoors, in an open area, when the engine is cold. Wipe up any gasoline that spills.**
- **Never fill the fuel tank inside an enclosed trailer.**
- **Do not fill the fuel tank completely full. Add gasoline to the fuel tank until the level is 1/4 to 1/2 inch (6 to 13 mm) below the bottom of the filler neck. This empty space in the tank allows gasoline to expand.**
- **Never smoke when handling gasoline, and stay away from an open flame or where gasoline fumes may be ignited by a spark.**
- **Store gasoline in an approved container and keep it out of the reach of children. Never buy more than a 30-day supply of gasoline.**
- **Do not operate without entire exhaust system in place and in proper working condition.**

In certain conditions during fueling, static electricity can be released causing a spark which can ignite the gasoline vapors. A fire or explosion from gasoline can burn you and others and can damage property.

- **Always place gasoline containers on the ground away from your vehicle before filling.**
- **Do not fill gasoline containers inside a vehicle or on a truck or trailer bed because interior carpets or plastic truck bed liners may insulate the container and slow the loss of any static charge.**
- **When practical, remove gas-powered equipment from the truck or trailer and refuel the equipment with its wheels on the ground.**
- **If this is not possible, then refuel such equipment on a truck or trailer from a portable container, rather than from a gasoline dispenser nozzle.**
- **If a gasoline dispenser nozzle must be used, keep the nozzle in contact with the rim of the fuel tank or container opening at all times until fueling is complete.**

Important: Do not use methanol, gasoline containing methanol, or gasohol containing more than 10% ethanol because the fuel system could be damaged. Do not mix oil with gasoline.

Using Stabilizer/Conditioner

Use a fuel stabilizer/conditioner in the traction unit to provide the following benefits:

- Keeps gasoline fresh during storage of 90 days or less. For longer storage it is recommended that the fuel tank be drained.
- Cleans the engine while it runs
- Eliminates gum-like varnish buildup in the fuel system, which causes hard starting

Important: Do not use fuel additives containing methanol or ethanol.

Add the correct amount of gas stabilizer/conditioner to the gas.

Note: A fuel stabilizer/conditioner is most effective when mixed with fresh gasoline. To minimize the

chance of varnish deposits in the fuel system, use fuel stabilizer at all times.

Filling the Fuel Tank

1. Park the traction unit on a level surface, lower the loader arms, and stop the engine.
2. Remove the key and allow the engine to cool.
3. Clean around the fuel tank cap and remove it.
4. Add unleaded gasoline to the fuel tank, until the level is just below the bottom of the filler neck.

   Important: This space in the tank allows gasoline to expand. Do not fill the fuel tank completely full.
5. Install the fuel tank cap securely.
6. Wipe up any gasoline that may have spilled.

Checking the Engine Oil Level

Service Interval: Before each use or daily

1. Park the traction unit on a level surface, lower the loader arms, and stop the engine.
2. Remove the key and allow the engine to cool.
3. Open the hood.
4. Clean around the oil dipstick (Figure 14).

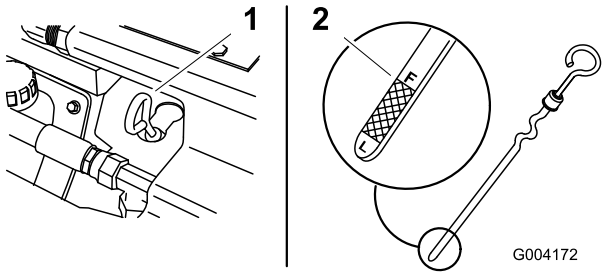

Figure 14

1. Oil dipstick
2. Metal end

5. Pull out the dipstick and wipe the metal end clean (Figure 14).
6. Slide the dipstick fully into the dipstick tube (Figure 14).
7. Pull the dipstick out and look at the metal end.
8. If the oil level is low, clean around the oil filler cap and remove the cap (Figure 15).

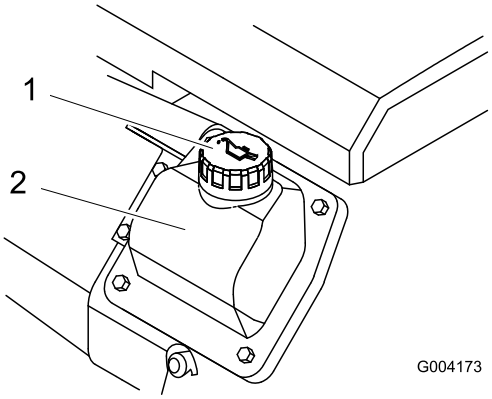

Figure 15

1. Filler cap
2. Valve cover

9. Slowly pour only enough oil into the valve cover to raise the level to the F (full) mark.

   Important: Do not overfill the crankcase with oil because the engine may be damaged.
10. Replace the filler cap and dipstick.
11. Close the hood.

Checking the Hydraulic Fluid Level

Service Interval: Every 25 hours

Hydraulic Tank Capacity: 12 US gallons (45.4 l)

Use 10W-30 or 15W-40 detergent, diesel engine oil (API service CH-4 or higher).

1. Remove the attachment, if one is installed; refer to Removing an Attachment.
2. Park the traction unit on a level surface, lower the loader arms, and fully retract the tilt cylinder.
3. Stop the engine, remove the key, and allow the engine to cool.
4. Open the hood.
5. Clean the area around the filler neck of the hydraulic tank (Figure 16).
6. Remove the cap from the filler neck and check the fluid level on the dipstick (Figure 16).

   The fluid level should be between the marks on the dipstick.

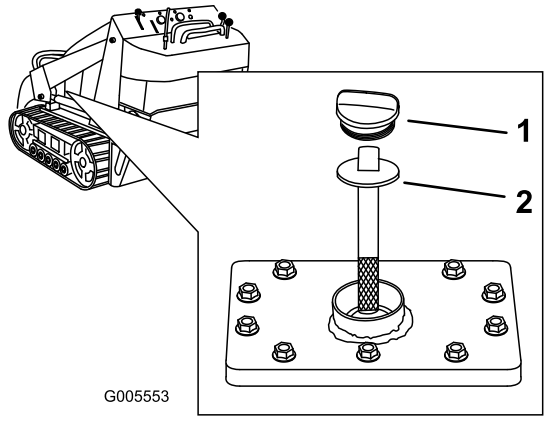

Figure 16

1. Filler neck cap
2. Dipstick

7. If the level is low, add enough fluid to raise it to the proper level.
8. Install the cap on the filler neck.
9. Close the hood.

Starting and Stopping the Engine

Starting the Engine

1. Ensure that the auxiliary hydraulics lever is in neutral.
2. Pull out the choke lever if you are starting a cold engine.
3. Move the throttle lever midway between slow (turtle) and fast (rabbit) positions.

   Note: A warm or hot engine may not require choking.
4. Turn the ignition key to the start position. When the engines starts, release the key.

   Important: Do not engage the starter for more than 10 seconds at a time. If the engine fails to start, allow a 30 second cool-down period between attempts. Failure to follow these instructions can burn out the starter motor.
5. After the engine starts, gradually push the choke down. If the engine stalls or hesitates, pull the choke out again until the engine warms up.
6. Move the throttle lever to desired setting.

   Important: If the engine is run at high speeds when the hydraulic system is cold (i.e., when the ambient air temperature is near freezing or lower), hydraulic system damage could occur. When starting the engine in cold conditions, allow the engine to run in the middle throttle position for 2 to 5 minutes before moving the throttle to fast (rabbit).

   Note: If outdoor temperature is below freezing, store the traction unit in a garage to keep it warmer and aid in starting.

Stopping the Engine

1. Move the throttle lever to the slow (turtle) position.
2. Lower the loader arms to the ground.
3. Turn the ignition key off.

   Note: If the engine has been working hard or is hot, let it idle for a minute before turning the ignition key off. This helps cool the engine before it is stopped. In an emergency, the engine may be stopped immediately.

Stopping the Traction Unit

To stop the traction unit, release the traction control, move the throttle lever to slow (turtle), lower loader arms to the ground, and stop the engine. Set the parking brake and remove the key.

A child or untrained bystander could attempt to operate the traction unit and be injured.

Remove the key from the switch when leaving the traction unit, even if just for a few seconds.

Moving a Non-functioning Traction Unit

Important: Do not tow or pull the traction unit without first opening the tow valves, or the hydraulic system will be damaged.

1. Stop the engine.
2. Open the rear access cover.
3. Using a wrench, turn the tow valves on the hydraulic pumps twice counter-clockwise (Figure 17).

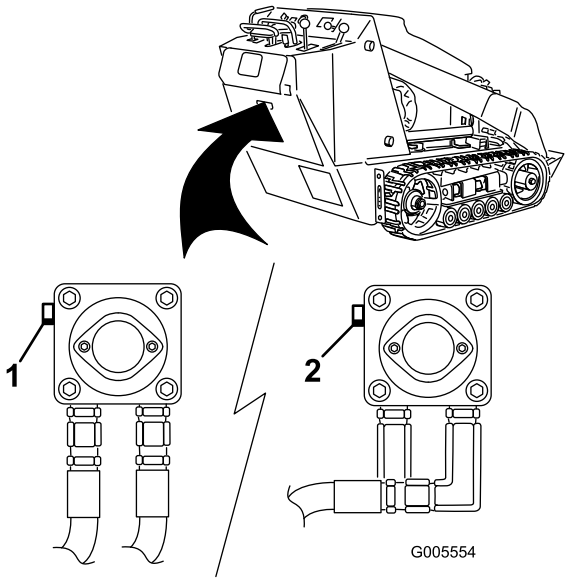

Figure 17

1. Left tow valve (right track) 2. Right tow valve (left track)

4. Tow the traction unit as required.
5. When the traction unit has been repaired, close the tow valves before operating it.

Using the Cylinder Lock

The loader arms may lower when in the raised position crushing anyone under them.

Install the cylinder lock before performing maintenance that requires raised loader arms.

Installing the Cylinder Lock

1. Remove the attachment.
2. Raise the loader arms to the fully raised position.
3. Stop the engine.
4. Remove the lynch pin securing the cylinder lock to the loader arm (Figure 18).

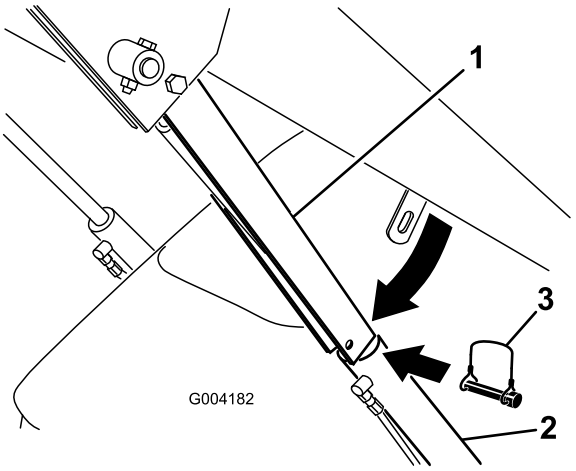

Figure 18

1. Cylinder lock
2. Lift cylinder
3. Lynch pin

5. Lower the cylinder lock over the cylinder rod and secure it with the lynch pin (Figure 18).
6. **Slowly** lower the loader arms until cylinder lock contacts the cylinder body and rod end.

Removing/Storing the Cylinder Lock

Important: Ensure that the cylinder lock is removed from the rod and fully secured in the storage position before operating the traction unit.

1. Start the engine.
2. Raise the loader arms to the fully raised position.
3. Stop the engine.
4. Remove the lynch pin securing the cylinder lock.
5. Rotate the cylinder lock up to the loader arm and secure it with the lynch pin.
6. Lower the loader arms.

Using Attachments

Important: If you are using an attachment with a serial number of 200999999 or earlier, the manual for the attachment may contain information specific to the use of the attachment with other traction unit models, such as settings for the flow divider control and speed selector lever and the use of a counterweight on the traction unit. These systems are built into the TX, and you should ignore any references to them.

Installing an Attachment

Important: Use only Toro-approved attachments. Attachments can change the stability and the operating characteristics of the traction unit. The

warranty of the traction unit may be voided if used with unapproved attachments.

Important: Before installing the attachment, ensure that the mount plates are free of any dirt or debris and that the pins rotate freely. If the pins do not rotate freely, grease them.

1. Position the attachment on a level surface with enough space behind it to accommodate the traction unit.
2. Start the engine.
3. Tilt the attachment mount plate forward.
4. Position mount plate into the upper lip of the attachment receiver plate (Figure 19).

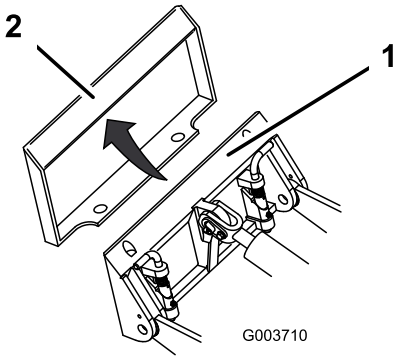

Figure 19

1. Mount plate
2. Receiver plate

5. Raise the loader arms while tilting back the mount plate at the same time.

   Important: The attachment should be raised enough to clear the ground, and the mount plate should be tilted all the way back.

6. Stop the engine.
7. Engage the quick attach pins, ensuring that they are fully seated in the mount plate (Figure 20).

   Important: If the pins do not rotate to the engaged position, the mount plate is not fully aligned with the holes in the attachment receiver plate. Check the receiver plate and clean it if necessary.

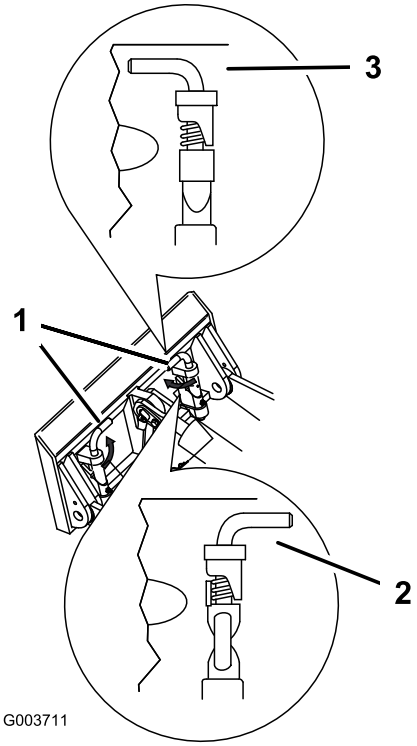

Figure 20

1. Quick attach pins (shown in engaged position)
2. Disengaged position
3. Engaged position

If you do not fully seat the quick attach pins through the attachment mount plate, the attachment could fall off of the traction unit, crushing you or bystanders.

Ensure that your quick attach pins are fully seated in the attachment mount plate.

Connecting the Hydraulic Hoses

If the attachment requires hydraulics for operation, connect the hydraulic hoses as follows:

1. Stop the engine.
2. Move the auxiliary hydraulics lever forward, backward, and back to neutral to relieve pressure at the hydraulic couplers.
3. Move the auxiliary hydraulics lever into the reverse position.
4. Remove the protective covers from the hydraulic couplers on the traction unit.
5. Ensure that all foreign matter is cleaned from the hydraulic connectors.

6. Push the attachment male connector into the female connector on the traction unit.

   Note: When you connect the attachment male connector first, you will relieve any pressure built up in the attachment.

Hydraulic fluid escaping under pressure can penetrate skin and cause injury. Fluid injected into the skin must be surgically removed within a few hours by a doctor familiar with this form of injury or gangrene may result.

- **Keep your body and hands away from pin hole leaks or nozzles that eject high pressure hydraulic fluid.**
- **Use cardboard or paper to find hydraulic leaks, never use your hands.**

Hydraulic couplers, hydraulic lines/valves, and hydraulic fluid may be hot. If you contact hot components you may be burned.

- **Wear gloves when operating the hydraulic couplers.**
- **Allow the traction unit to cool before touching hydraulic components.**
- **Do not touch hydraulic fluid spills.**

7. Push the attachment female connector into the male connector on the traction unit.
8. Confirm that the connection is secure by pulling on the hoses.
9. Move the auxiliary hydraulics lever to neutral.

Removing an Attachment

1. Lower the attachment to the ground.
2. Stop the engine.
3. Disengage the quick attach pins by turning them to the outside.
4. If the attachment uses hydraulics, move the auxiliary hydraulics lever forward, backward, and back to neutral to relieve pressure at the hydraulic couplers.
5. If the attachment uses hydraulics, slide the collar back on the hydraulic couplers and disconnect them.

   Important: Connect the attachment hoses together to prevent hydraulic system contamination during storage.
6. Install the protective covers onto the hydraulic couplers on the traction unit.
7. Start the engine, tilt the mount plate forward, and back the traction unit away from the attachment.

Securing the Traction Unit for Transport

When transporting the traction unit on a trailer, always use the following procedure:

Important: Do not operate or drive the traction unit on roadways.

1. Lower the loader arms.
2. Stop the engine.
3. Secure the traction unit to the trailer with chains or straps using the tie-down/lift loops (Figure 3) to secure the rear of the traction unit and the loader arms/mount plate to secure the front of the traction unit.

Lifting the Traction Unit

You can lift the traction unit using the tie-down/lift loops as lift points (Figure 3).

Maintenance

Note: Determine the left and right sides of the machine from the normal operating position.

Recommended Maintenance Schedule(s)

Maintenance Service Interval	Maintenance Procedure
After the first 8 hours	• Replace the hydraulic filter.
After the first 50 hours	• Change the engine oil and filter. • Check and adjust the track tension.
Before each use or daily	• Check the engine oil level. • Grease the traction unit. (Grease immediately after every washing.) • Check the air filter service indicator. • Clean the tracks. • Check the tracks for excessive wear (If the tracks are worn, replace them.) • Remove debris from the traction unit. • Check for loose fasteners.
Every 25 hours	• Check the hydraulic fluid level. • Remove air cleaner cover, clean out debris, and check the air filter service indicator. • Inspect the drive belt for wear or damage.
Every 100 hours	• Change the engine oil. • Check the battery electrolyte level (replacement battery only). • Check the battery cable connections. • Check and adjust the track tension. • Check the hydraulic lines for leaks, loose fittings, kinked lines, loose mounting supports, wear, weather, and chemical deterioration. • Check for dirt build-up in the chassis.
Every 200 hours	• Change the oil filter. • Check the spark plugs. • Change the fuel filter. • Replace the drive belt. • Replace the hydraulic filter.
Every 250 hours	• Check and grease the road wheels.
Every 400 hours	• Change the hydraulic fluid.
Every 600 hours	• Replace the safety air filter.
Every 1,500 hours	• Replace all moving hydraulic hoses.
Yearly or before storage	• Check and adjust the track tension. • Touch up chipped paint

Important: Refer to your *Engine Operator's Manual* for additional maintenance procedures.

Note: After 50 hours and then every 100 hours thereafter (that is at 150, 250, 350, etc.) the hour meter displays CHG OIL to remind you to change the engine oil. After every 100 hours, the screen displays SVC to remind you to perform the other maintenance procedures based on a 100, 200, or 400 hour schedule. These reminders come on starting three hours prior to the service interval time and flash at regular intervals for six hours.

If you leave the key in the ignition switch, someone could accidently start the engine and seriously injure you or other bystanders.

Remove the key from the ignition and disconnect the wire from the spark plug before you do any maintenance. Set the wire aside so that it does not accidentally contact the spark plug.

Premaintenance Procedures

Before opening any of the covers, stop the engine and remove the key. Allow the engine to cool before opening any covers

Opening the Hood

1. Loosen the hood locking screw (Figure 21)

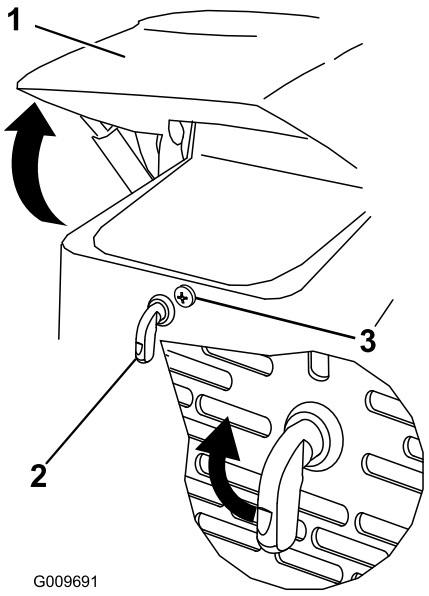

Figure 21

1. Hood
2. Lever hood latch
3. Hood locking screw

2. Turn the hood latch clockwise (Figure 21).
3. Swing the hood up (Figure 21).
4. Swing the prop rod up and secure it in the bracket on the hood (Figure 22).

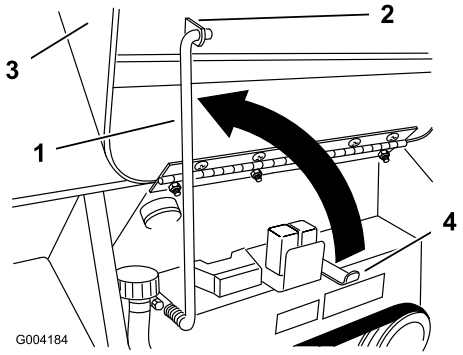

Figure 22

1. Prop rod
2. Bracket
3. Hood
4. Prop rod holder

Closing the Hood

1. Pull the prop rod out of the bracket on the hood and lower it into its holder.
2. Lower the hood and secure it by pushing down on the front of the hood until it locks in place.
3. Tighten the hood locking screw to secure the latch (Figure 21).

Opening the Rear Access Cover

1. Unscrew the 2 hand knobs securing the rear access cover to the machine (Figure 23).

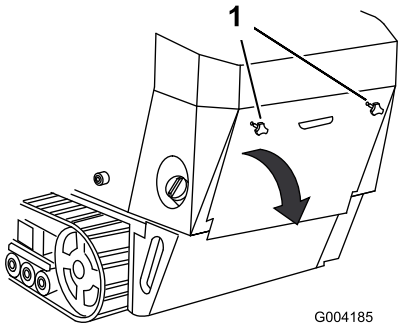

Figure 23

1. Hand knob

2. Tilt the rear access cover down and remove to access the internal components (Figure 23).

Closing the Rear Access Cover

1. Move the rear access cover in place over the back of the traction unit making sure the tabs line up in the slots.
2. Push the access cover forward, lining up the hand knob screws with the threaded holes in the machine.
3. Screw the hand knobs tight to secure the rear access cover in place.

Removing the Side Screens

1. Open the hood.
2. Slide the side screens (Figure 24) up and out of the slots in the front screen and frame.



Figure 24

1. Side screen

Installing the Side Screens

Slide the side screens into place in the slots in the front screen and frame.

Removing the Front Screen

If the engine has been running the heat shield will be very hot and could burn you.

Allow the traction unit cool completely before touching the heat shield.

1. Open the hood and remove both side screens.
2. Loosen the bolts securing the front weight (Figure 25).

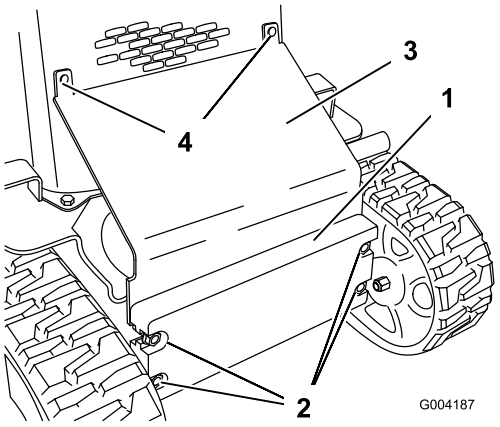

Figure 25

1. Front weight
2. Bolts
3. Heat shield
4. Carriage bolts

3. Remove the carriage bolts and nuts securing the heat shield (Figure 25).
4. Lift the heat shield up and off of the traction unit.
5. Remove the 4 bolts securing the front screen to the traction unit frame (Figure 26).

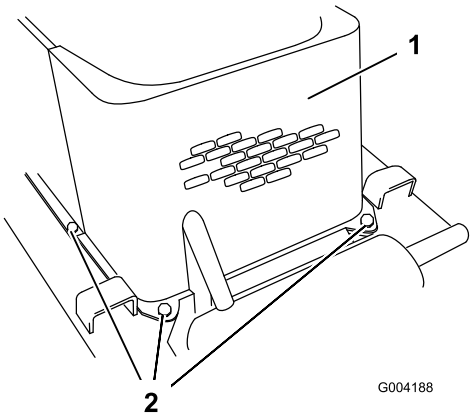

Figure 26

1. Front screen
2. Bolts (left side bolt not shown)

6. Remove the shoulder bolts and nuts securing the oil cooler to the top of the front screen (Figure 27).

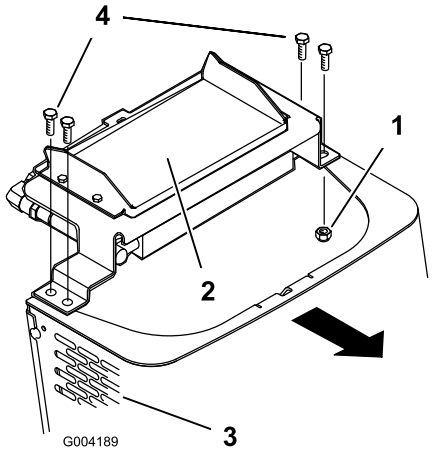

Figure 27

1. Nut
2. Oil cooler
3. Front screen
4. Shoulder bolts

7. Remove the front screen.
8. When finished, install the front screen with the 4 bolts removed previously.
9. Install the oil cooler to the front screen with the 4 shoulder bolts and nuts removed previously.
10. Slide the heat shield between the frame and the front weight and secure it to the front screen grill using the carriage bolts and nuts removed previously (Figure 25).
11. Tighten the bolts securing the front weight (Figure 25).
12. Install the side screens and close the hood.

Lubrication

Greasing the Traction Unit

Service Interval: Before each use or daily (Grease immediately after every washing.)

Grease Type: General-purpose grease.

1. Lower the loader arms and stop the engine. Remove the key.
2. Clean the grease fittings with a rag.
3. Connect a grease gun to each fitting (Figure 28).

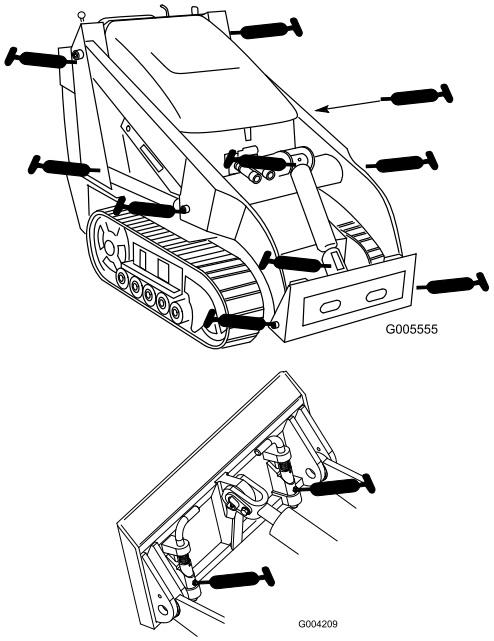

Figure 28

4. Pump grease into the fittings until grease begins to ooze out of the bearings (approximately 3 pumps).
5. Wipe up any excess grease.

Engine Maintenance

Servicing the Air Cleaner

Service Interval: Before each use or daily—Check the air filter service indicator.

Every 25 hours—Remove air cleaner cover, clean out debris, and check the air filter service indicator.

Every 600 hours—Replace the safety air filter.

Servicing the Air Cleaner Cover and Body

Important: Service the air cleaner filter only when the service indicator shows red (Figure 29). Changing the air filter before it is necessary only increases the chance of dirt entering the engine when the filter is removed.

1. Lower the loader arms, stop the engine, and remove the key.
2. Open the hood.
3. Check the air cleaner body for damage which could cause an air leak.. Check the whole intake system for leaks, damage, or loose hose clamps. Replace of repair and damaged components.
4. Release the latches on the air cleaner and pull the air cleaner cover off of the air cleaner body (Figure 29).

   Important: Do not remove the air filters.

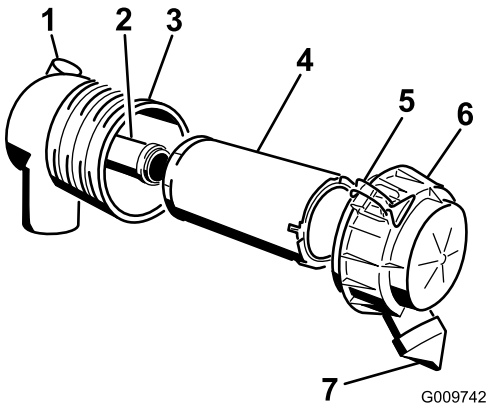

Figure 29

1. Air filter service indicator
2. Safety filter
3. Air filter body
4. Primary filter
5. Latches
6. Air cleaner cover
7. Dust cap

5. Squeeze the dust cap sides to open it and knock the dust out.
6. Clean the inside of the air cleaner cover with compressed air.
7. Check the air filter service indicator.
   - If the service indicator is clear, clean any debris from cover and install cover.

     Ensure that the cover is seated correctly and seals with the air cleaner body.
   - If the service indicator is red, replace the air filter as described in Replacing the Filters.

Replacing the Filters

1. Gently slide the primary filter out of the air cleaner body (Figure 29). Avoid knocking the filter into the side of the body.

   Important: Do not attempt to clean the primary filter.
2. Remove the safety filter only if you intend to replace it.

   Important: Never attempt to clean the safety filter. If the safety filter is dirty, then the primary filter is damaged and you should replace both filters.
3. Inspect the new filter(s) for damage by looking into the filter while shining a bright light on the outside of the filter. Holes in the filter will appear as bright spots. Inspect the element for tears, an oily film, or damage to the rubber seal. If the filter is damaged do not use it.
4. If you are replacing the safety filter, carefully slide the new filter into the filter body (Figure 29).

   Important: To prevent engine damage, always operate the engine with both air filters and cover installed.
5. Carefully slide the primary filter over the safety filter (Figure 29). Ensure that it is fully seated by pushing on the outer rim of the filter while installing it.

   Important: Do not press on the soft inside area of the filter.
6. Install the air cleaner cover with the side indicated as UP facing up and secure the latches (Figure 29).
7. Close the hood.

Servicing the Engine Oil

Service Interval: After the first 50 hours

Every 100 hours—Change the engine oil.

Every 200 hours—Change the oil filter.

Note: Change oil and filter more frequently when operating conditions are extremely dusty or sandy.

Oil Type: Detergent oil (API service SG, SH, SJ, or higher)

Crankcase Capacity: w/filter, 2.1 qt. (2 l)

Viscosity: See table below

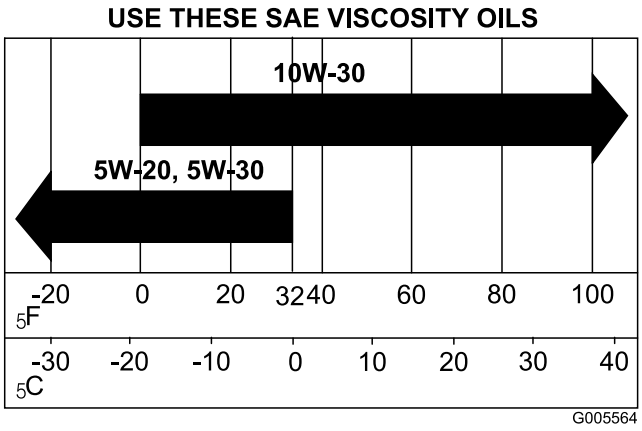

Figure 30

Changing the Oil

1. Start the engine and let it run for five minutes. This warms the oil so it drains better.
2. Park the traction unit so that the drain side is slightly lower than the opposite side to ensure that the oil drains completely.
3. Lower the loader arms, set the parking brake, stop the engine, and remove the key.

Components will be hot if the traction unit has been running. If you touch hot components you may be burned.

Allow the traction unit to cool before performing maintenance or touching components under the hood.

4. Remove the drain plug (Figure 31).

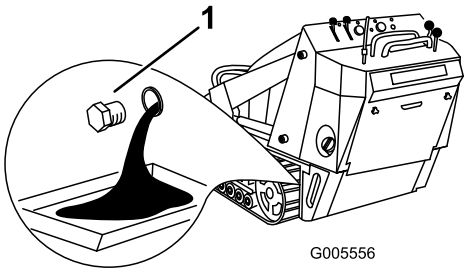

Figure 31

1. Oil drain valve

5. When the oil has drained completely, replace the plug.

   Note: Dispose of the used oil at a certified recycling center.

6. Remove the oil fill cap and slowly pour approximately 80% of the specified amount of oil in through the valve cover.
7. Check the oil level; refer to Checking the Engine Oil Level.
8. Slowly add additional oil to bring the level to the F (full) mark on the dipstick.
9. Replace the fill cap.

Changing the Oil Filter

1. Drain the oil from the engine; refer to Changing the Oil.
2. Place a shallow pan or rag under the filter to catch oil.
3. Remove the old filter (Figure 32) and wipe the surface of the filter adapter gasket.

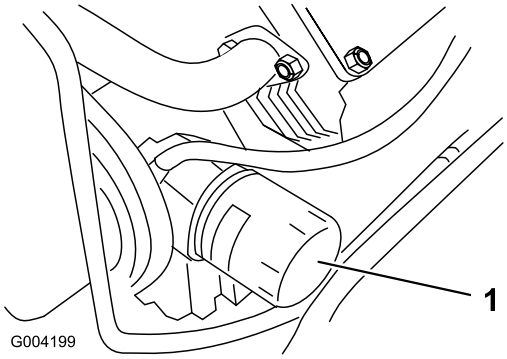

Figure 32

1. Oil filter

4. Pour new oil of the proper type through the center hole of the filter. Stop pouring when the oil reaches the bottom of the threads.
5. Allow a minute or two for the oil to be absorbed by filter material, then pour off the excess oil.
6. Apply a thin coat of new oil to the rubber gasket on the replacement filter.
7. Install the replacement oil filter to the filter adapter. Turn the oil filter clockwise until the rubber gasket contacts the filter adapter, then tighten the filter an additional 1/2 turn.
8. Fill the crankcase with the proper type of new oil; refer to Changing the Oil.

Servicing the Spark Plugs

Service Interval: Every 200 hours—Check the spark plugs.

Ensure that the air gap between the center and side electrodes is correct before installing each spark plug. Use a spark plug wrench for removing and installing the spark plugs and a gapping tool/feeler gauge to check and adjust the air gap. Install new spark plugs if necessary.

Type: Champion Platinum 3071, RC12YC, or equivalent.
Air Gap: 0.03 inch (0.75 mm)

Removing the Spark Plugs

1. Lower the loader arms, stop the engine, and remove the key.
2. Open the hood.
3. Pull the wires off of the spark plugs (Figure 33).

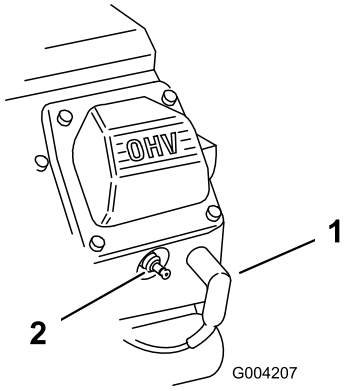

Figure 33

1. Spark plug wire
2. Spark plug

4. Clean around the spark plugs.
5. Remove both spark plugs and metal washers.

Checking the Spark Plugs

1. Look at the center of both spark plugs (Figure 34). If you see light brown or gray on the insulator, the engine is operating properly. A black coating on the insulator usually means the air cleaner is dirty.

   Important: Never clean the spark plugs. Always replace the spark plugs when they have a black coating, worn electrodes, an oily film, or cracks.

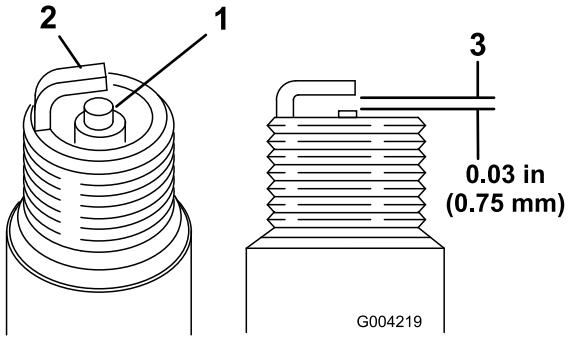

Figure 34

1. Center electrode insulator
2. Side electrode
3. Air gap (not to scale)

2. Check the gap between the center and side electrodes (Figure 34).
3. Bend the side electrode (Figure 34) if the gap is not correct.

Installing the Spark Plugs

1. Thread the spark plugs into the spark plug holes.
2. Tighten the spark plugs to 20 ft-lb (27 N-m).

3. Push the wires onto the spark plugs (Figure 33).
4. Close the hood.

Fuel System Maintenance

Changing the Fuel Filter

Service Interval: Every 200 hours/Yearly (whichever comes first)

1. Lower the loader arms, stop the engine, and remove the key.
2. Open the hood and remove the left side screen.
3. Loosen the tank cap to relieve pressure.
4. Clamp the fuel lines on both sides of the fuel filter (Figure 35).

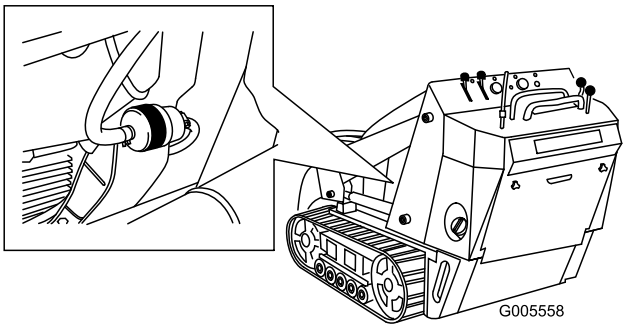

Figure 35

1. Filter
2. Hose clamp

5. Squeeze the ends of the hose clamps together and slide them away from the filter (Figure 35).
6. Place a drain pan under the fuel lines to catch any leaks, then remove the filter from the fuel lines.
7. Slide the fuel lines on the new fuel filter fittings, ensuring that the arrow on the filter points away from the fuel line coming from the fuel tank and toward the line going to the fuel pump.

   Important: Never install a dirty filter.

8. Move the hose clamps close to the filter.
9. Remove the clamp blocking fuel flow and open the fuel valves.
10. Secure the tank cap.
11. Replace the side screen and close the hood.

Draining the Fuel Tank

In certain conditions, gasoline is extremely flammable and highly explosive. A fire or explosion from gasoline can burn you and others and can damage property.

- **Drain gasoline from the fuel tank when the engine is cold. Do this outdoors in an open area. Wipe up any gasoline that spills.**
- **Never smoke when draining gasoline, and stay away from an open flame or where a spark may ignite the gasoline fumes.**

1. Lower the loader arms, stop the engine, and remove the key.
2. Syphon the gasoline from the tank using a pump type syphon.

Note: Now is the best time to install a new fuel filter because the fuel tank is empty.

Electrical System Maintenance

Servicing the Battery

Service Interval: Every 100 hours—Check the battery electrolyte level (replacement battery only).

Every 100 hours—Check the battery cable connections.

Warning

CALIFORNIA
Proposition 65 Warning

Battery posts, terminals, and related accessories contain lead and lead compounds, chemicals known to the State of California to cause cancer and reproductive harm. Wash hands after handling.

Important: The following procedures apply when servicing a (dry) battery that has replaced the original battery. The original (wet) battery does not require service.

Always keep the battery clean and fully charged. Use a paper towel to clean the battery case. If the battery terminals are corroded, clean them with a solution of four parts water and one part baking soda. Apply a light coating of grease to the battery terminals to reduce corrosion.

Voltage: 12 v, 585 Cold Cranking Amps

Checking the Electrolyte Level

1. Stop the engine and remove the key.
2. Remove the 4 bolts securing the battery cover and remove it from over the battery.
3. Look at the side of the battery. The electrolyte must be up to the Upper line (Figure 36). Do not allow the electrolyte to fall below the Lower line (Figure 36).

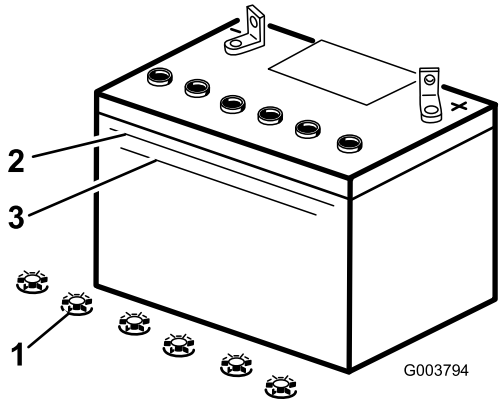

Figure 36

1. Filler caps
2. Upper line
3. Lower line

4. If the electrolyte is low, add the required amount of distilled water; refer to Adding Water to the Battery.

Adding Water to the Battery

The best time to add distilled water to the battery is just before you operate the traction unit. This lets the water mix thoroughly with the electrolyte solution.

Battery electrolyte contains sulfuric acid which is a deadly poison and causes severe burns.

- **Do not drink electrolyte and avoid contact with skin, eyes or clothing. Wear safety glasses to shield your eyes and rubber gloves to protect your hands.**
- **Fill the battery where clean water is always available for flushing the skin.**

1. Remove the battery from the traction unit.

   Important: Never fill the battery with distilled water while the battery is installed in the traction unit. Electrolyte could be spilled on other parts and cause corrosion.

2. Clean the top of the battery with a paper towel.
3. Remove the filler caps from the battery (Figure 36).
4. Slowly pour distilled water into each battery cell until the electrolyte level is up to the Upper line (Figure 36) on the battery case.

   Important: Do not overfill the battery because electrolyte (sulfuric acid) can cause severe corrosion and damage to the chassis.

5. Wait five to ten minutes after filling the battery cells. Add distilled water, if necessary, until the electrolyte level is up to the Upper line (Figure 36) on the battery case.
6. Install the battery filler caps.

Charging the Battery

Charging the battery produces gasses that can explode.

Never smoke near the battery and keep sparks and flames away from battery.

Important: Always keep the battery fully charged (1.265 specific gravity). This is especially important to prevent battery damage when the temperature is below 32°F (0°C).

1. Check the electrolyte level; refer to Checking Electrolyte Level.
2. Make sure the filler caps are installed in the battery.
3. Charge the battery for 10 to 15 minutes at 25 to 30 amps or 30 minutes at 4 to 6 amps (Figure 37). Do not overcharge the battery.

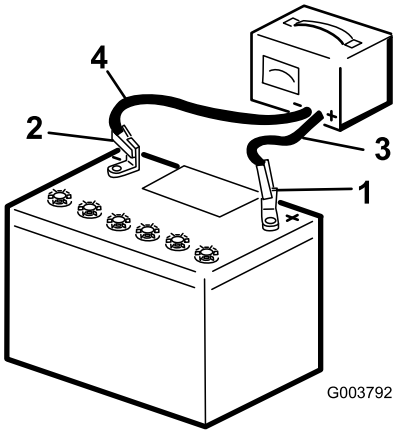

Figure 37

1. Positive battery post
2. Negative battery post
3. Red (+) charger lead
4. Black (-) charger lead

4. When the battery is fully charged, unplug the charger from the electrical outlet, then disconnect the charger leads from the battery posts (Figure 37).
5. Replace the battery cover.

Drive System Maintenance

Servicing the Tracks

Service Interval: After the first 50 hours—Check and adjust the track tension.

Before each use or daily—Clean the tracks.

Before each use or daily—Check the tracks for excessive wear (If the tracks are worn, replace them.)

Every 100 hours—Check and adjust the track tension.

Every 250 hours/Yearly (whichever comes first)—Check and grease the road wheels.

Cleaning the Tracks

1. With a bucket on the loader arms, lower the bucket to the ground so that the front of the traction unit lifts off of the ground a few inches.
2. Stop the engine, and remove the key.
3. Using a water hose or pressure washer, remove dirt from each track system.

Important: Ensure that you use high-pressure water to wash only the track area. Do not use a high-pressure washer to clean the rest of the traction unit. High-pressure washing can damage the electrical system and hydraulic valves or deplete grease.

Important: Ensure that you fully clean the road wheels, the tension wheel, and the drive sprocket (Figure 38). The road wheels should rotate freely when clean.

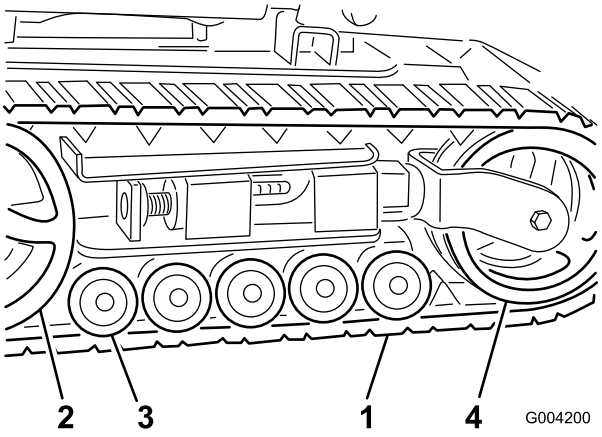

Figure 38

1. Track
2. Drive sprocket
3. Road wheels
4. Tension wheel

Adjusting the Track Tension

There should be 2-3/4 inches (7 cm) between the tension nut and the back of the tension tube (Figure 39). If not, adjust the track tension using the following procedure:

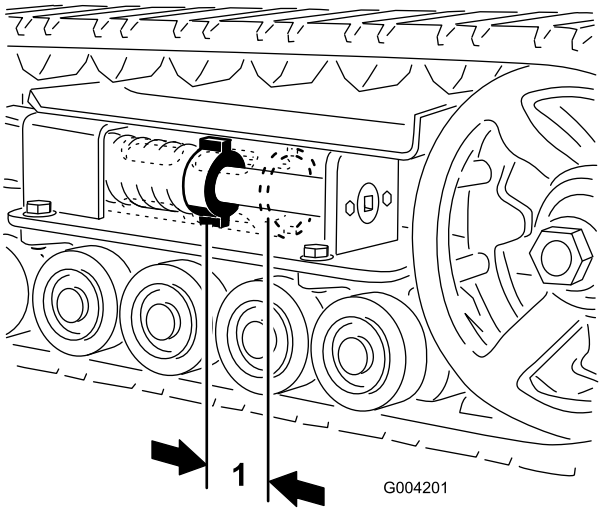

Figure 39

1. 2-3/4 inches (7 cm)

1. Lower the loader arms, stop the engine, and remove the key.
2. Lift/support the side of the unit to be worked on so that the track is off of the ground.
3. Remove the locking bolt and nut (Figure 40).

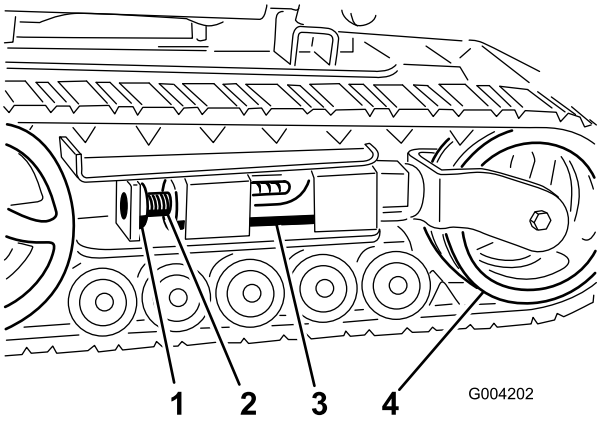

Figure 40

1. Locking bolt
2. Tensioning screw
3. Tension tube
4. Tension wheel

4. Using a 1/2 inch drive socket wrench (Figure 41), turn the tensioning screw counter-clockwise until the distance between the tension nut and the back of the tension tube (Figure 39) is 2-3/4 inches (7 cm).
5. Align the closest notch in the tension screw to the locking bolt hole and secure the screw with the locking bolt and nut (Figure 40).
6. Lower the traction unit to the ground.

Replacing the Tracks (Models 22321 and 22321G)

When the tracks are badly worn, replace them.

1. Lower the loader arms, stop the engine, and remove the key.
2. Lift/support the side of the unit to be worked on so that the track is 3 to 4 inches (7.6 to 10 cm) off of the ground.
3. Remove the locking bolt and nut (Figure 40).
4. Using a 1/2 inch drive socket wrench, release the drive tension by turning the tensioning screw clockwise (Figure 40 and Figure 41).

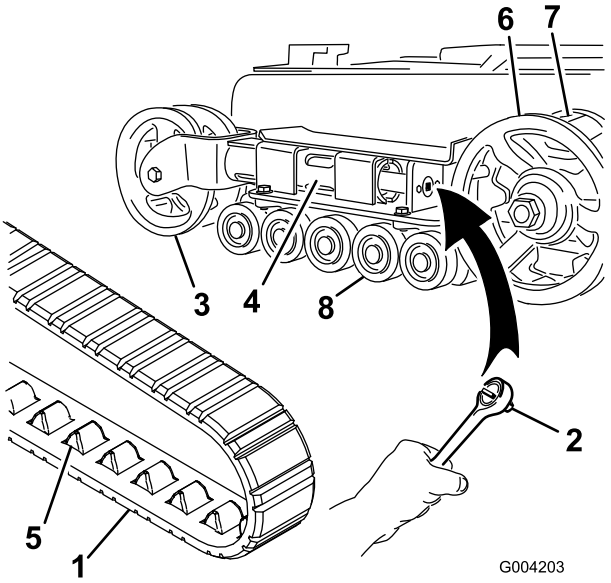

Figure 41

1. Track
2. 1/2 inch socket wrench
3. Tension wheel
4. Tension tube
5. Track lug
6. Drive sprocket
7. Sprocket cog
8. Road wheels

5. Push the tension wheel toward the rear of the unit to move the tension tube against the frame (Figure 41). (If it does not touch the frame, continue turning the tensioning screw until it does.)
6. Begin removing the track at the top of the tension wheel, peeling it off of the wheel while rotating the track forwards.
7. When the track is off of the tension wheel, remove it from the drive sprocket and road wheels (Figure 41).
8. Beginning at the drive sprocket, coil the new track around the sprocket, ensuring that the lugs on the track fit between the cogs on the sprocket (Figure 41).
9. Push the track under and between the road wheels (Figure 41).
10. Starting at the bottom of the tension wheel, install the track around the wheel by rotating the track rearward while pushing the lugs into the wheel.
11. Turn the tensioning screw counter-clockwise until the distance between the tension nut and the back of the tension tube (Figure 39) is 2-3/4 inches (7 cm).
12. Align the closest notch in the tension screw to the locking bolt hole and secure the screw with the locking bolt and nut.
13. Lower the traction unit to the ground.
14. Repeat steps 2 through 13 to replace the other track.

Replacing the Tracks (Model 22322)

When the tracks are badly worn, replace them.

1. Lower the loader arms, stop the engine, and remove the key.
2. Lift/support the side of the unit to be worked on so that the track is 3 to 4 inches (7.6 to 10 cm) off of the ground.
3. Remove the locking bolt and nut (Figure 40).
4. Using a 1/2 inch drive socket wrench, release the drive tension by turning the tensioning screw clockwise (Figure 40 and Figure 42).

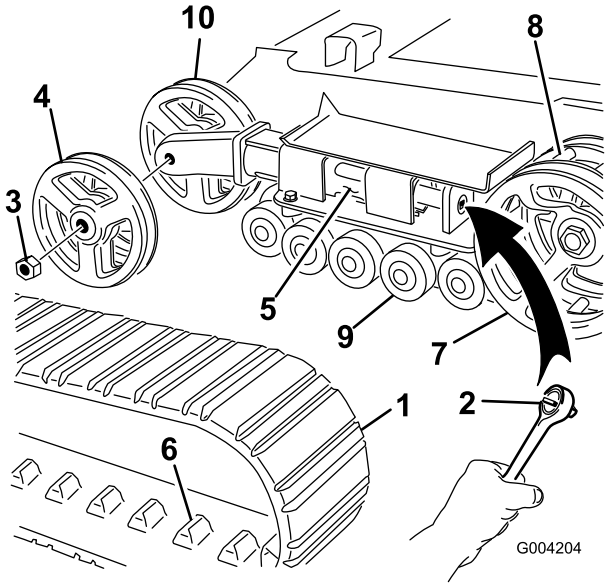

Figure 42

1. Track
2. 1/2 inch socket wrench
3. Tension wheel nut
4. Outer tension wheel
5. Tension tube
6. Track lug
7. Drive sprocket
8. Sprocket cog
9. Road wheels
10. Inner tension wheel

5. Push the tension wheel toward the rear of the unit to move the tension tube against the frame (Figure 42). (If it does not touch the frame, continue turning the tensioning screw until it does.)
6. Remove the nut securing the outer tension wheel and remove the wheel (Figure 42).
7. Remove the track (Figure 42).
8. Remove the nut securing the inner tension wheel and remove the wheel (Figure 42).
9. Pull the 4 large washers out of the 2 wheels, 1 on each side of each wheel.
10. Clean the old grease and dirt out of the area between where the washers were installed and the bearings inside the wheels, then fill this area on each side of each wheel with grease.
11. Install the large washers on the wheels over the grease.
12. Install the inner tension wheel and secure it with the nut removed previously (Figure 42).
13. Torque the nut to 300 ft-lb (407 N-m).
14. Install the new track, ensuring that the lugs in the track fit between the cogs in the middle of the drive sprocket (Figure 42).
15. Install the outer tension wheel and secure it with the nut removed previously (Figure 42).
16. Torque the nut to 300 ft-lb (407 N-m).
17. Turn the tensioning screw counter-clockwise until the distance between the tension nut and the back of the tension tube (Figure 39) is 2-3/4 inches (7 cm).
18. Align the closest notch in the tension screw to the locking bolt hole and secure the screw with the locking bolt and nut.
19. Repeat steps 2 through 18 to replace the other track.
20. Lower the traction unit to the ground.

Maintaining the Road Wheels

1. Remove the tracks; refer to Replacing the Tracks.
2. Remove the 4 bolts securing each lower track guide which contains the road wheels, and remove them (Figure 43).

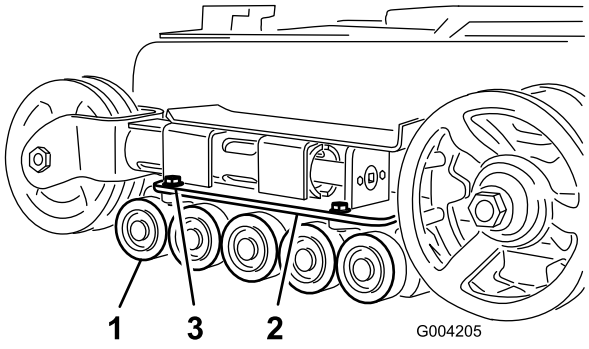

Figure 43

1. Road wheels
2. Lower track guide
3. Track guide bolts (only two shown)

3. Remove the snap ring and cap from a road wheel (Figure 44).

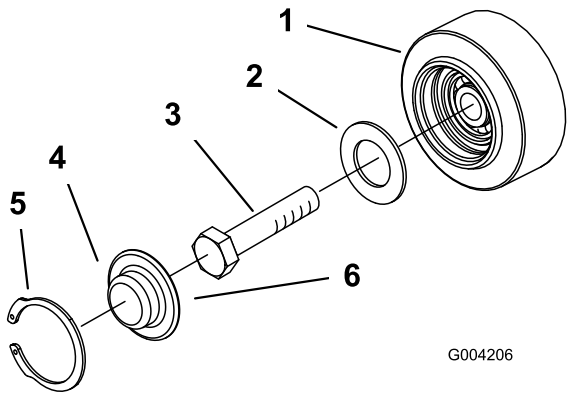

Figure 44

1. Road wheel
2. Gasket
3. Bolt
4. Road wheel cap
5. Snap ring
6. Add grease under the cap

4. Check the grease under the cap and around the gasket (Figure 44). If it is dirty, gritty, or depleted, clean out all of the grease, replace the gasket, and add new grease.
5. Ensure that the road wheel turns smoothly on the bearing. If it is frozen, replace the road wheel as described in the *Road Wheel Kit Installation Instructions* or contact your Authorized Service Dealer for repair.
6. Place the greased road wheel cap over the bolt head (Figure 44).
7. Secure the road wheel cap with the snap ring (Figure 44).
8. Repeat steps 3 through 7 for the other road wheels.
9. Install each track guide to the traction unit frame using the fasteners you removed previously. Torque the bolts to 67 to 83 ft-lb (91 to 112 N-m).
10. Install the tracks; refer to Replacing the Tracks.

Belt Maintenance

Inspecting/Replacing the Drive Belt

Service Interval: Every 25 hours—Inspect the drive belt for wear or damage.

Every 200 hours—Replace the drive belt.

Replace the belt if you find any signs of wear, cracks, or damage or after 200 operating hours, whichever comes first.

To replace the drive belt, complete the following procedure:

Note: To complete this procedure, you will need a sturdy metal hook to disconnect the idler pulley spring, such as the Spring Removal Tool (Toro part number 92–5771) available for order from you Authorized Service Dealer.

1. Lower the loader arms, stop the engine, and remove the key.
2. Open the hood.
3. Connect the hook on the spring removal tool to the hook on the idler pulley spring, and disconnect the spring from the stud as illustrated in Figure 45.

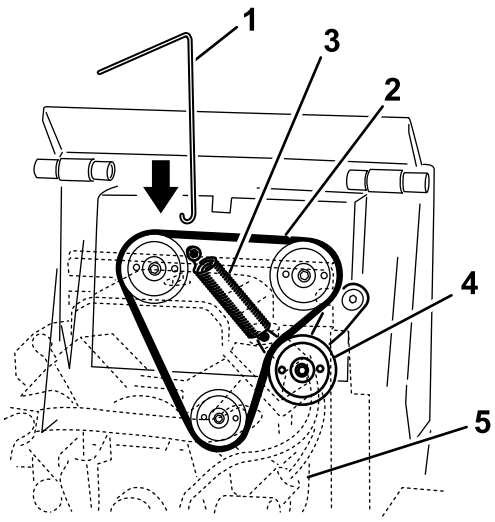

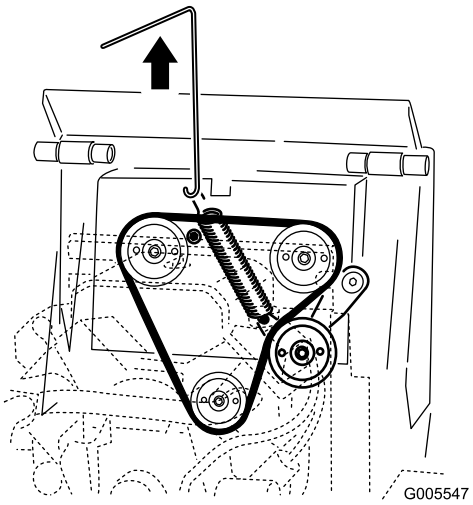

Figure 45

1. Spring removal tool
2. Drive belt
3. Idler pulley spring
4. Idler pulley
5. Engine (see-through for illustrative purposes)

4. Remove the idler pulley spring from the idler pulley assembly (Figure 46).

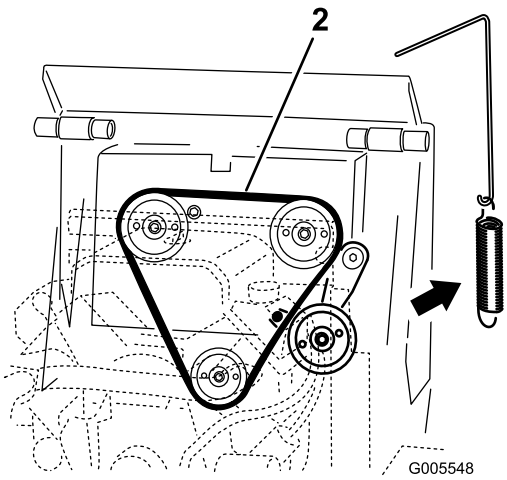

Figure 46

1. Idler pulley assembly
2. Drive belt routing

5. Remove the belt from the three pulleys (Figure 47).

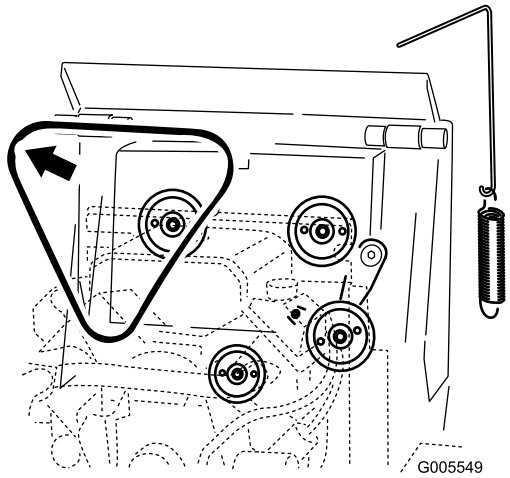

Figure 47

6. Install a new drive belt around the three pulleys (Figure 46).
7. Install the end of the idler pulley spring to the arm on the idler pulley assembly.
8. Using the spring removal tool, pull the idler spring hook up and around the stud on the traction unit, pulling the idler pulley tight.
9. Remove the spring removal tool from the spring and close the hood.

Controls System Maintenance

The factory adjusts the controls before shipping the traction unit. However, after many hours of use, you may need to adjust the traction control alignment, the neutral position of the traction control, and the tracking of the traction control in the full forward position.

Important: To adjust the controls properly, complete each procedure in the order listed.

Adjusting the Traction Control Alignment

If the traction control bar does not rest flush and square with the reference bar when in the full backward position, immediately complete the following procedure:

1. Park the traction unit on a flat surface and lower the loader arm.
2. Stop the engine and remove the key.
3. Pull straight back on the traction control so the front of the control contacts the reference bar (Figure 48).

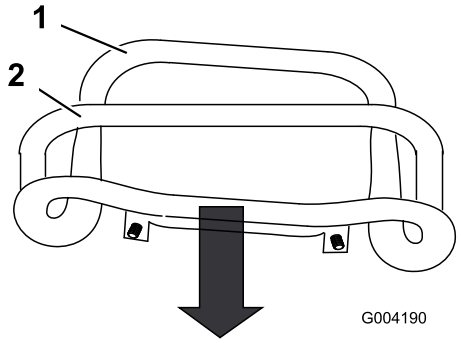

Figure 48

1. Front of the control, out of alignment
2. Reference bar

4. If the front of the traction control does not rest square and flush with the reference bar, loosen the flange nut and bolt in the stem of the traction control (Figure 49).

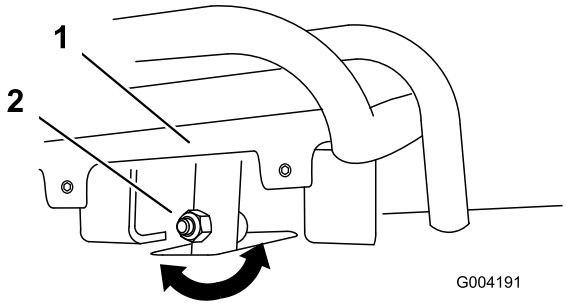

Figure 49

1. Traction control
2. Stem , bolt and nut

5. Adjust the traction control so that it rests flush against the reference bar when it is pulled straight back (Figure 49 and Figure 50).

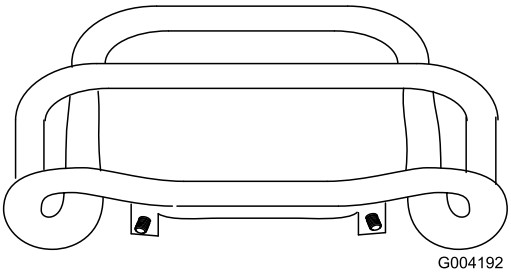

Figure 50

6. Tighten the flange nut and bolt in the traction control stem.

Adjusting the Traction Control Neutral Position

If the traction unit creeps forward or backward when the traction control is in neutral and the unit is warm, immediately complete the following procedure:

1. Lift/support the traction unit so that both tracks are off of the ground.
2. Open the rear access cover.
3. Loosen the jam nuts on the traction rods, under the control panel (Figure 51).

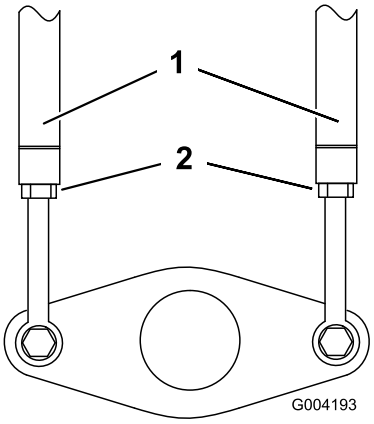

Figure 51

1. Traction rod
2. Jam nut

4. Start the traction unit and set the throttle to about 1/3 open position.

When the traction unit is running, you could be caught and injured in moving parts or burned on hot surfaces.

Stay away from pinch points, moving parts, and hot surfaces when adjusting the running traction unit.

5. If the **left** track moves, lengthen or shorten the **right** traction rod until the track stops moving.
6. If the **right** track moves, lengthen or shorten the **left** traction rod until the track stops moving.
7. Tighten the jam nuts.
8. Close the rear access cover.
9. Stop the engine and lower the traction unit to the ground.
10. Drive the traction unit in full reverse, checking to see if the unit tracks straight. If it does not, note the direction the traction unit veers. Repeat the adjustment previously described so that it tracks straight in reverse.

Adjusting the Tracking of the Traction Control, Full Forward Position

If the traction unit does not drive straight when you hold the traction control against the reference bar, complete the following procedure:

1. Drive the traction unit with the traction control against the reference bar, noting which direction the traction unit veers.
2. Release the traction control.
3. If the traction unit veers to the **left**, loosen the **right** jam nut and adjust the tracking set screw on the front of the traction control (Figure 52).
4. If the traction unit veers to the **right**, loosen the **left** jam nut and adjust the tracking set screw on the front of the traction control (Figure 52).

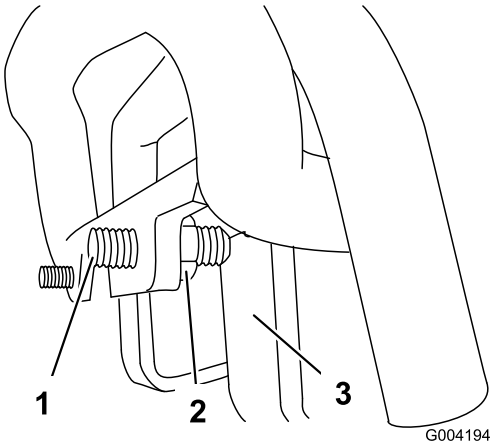

Figure 52

1. Set screw
2. Jam nut
3. Stop

5. Repeat steps 1 through 4 until the traction unit drives straight in the full forward position.

Important: Ensure the tracking set screws touch the stops in the full forward position to avoid over stroking the hydraulic pumps.

Hydraulic System Maintenance

Replacing the Hydraulic Filter

Service Interval: After the first 8 hours

Every 200 hours

Important: Do not substitute an automotive oil filter or severe hydraulic system damage may result.

Change the hydraulic filter:

- After the first 8 operating hours
- After every 200 operating hours

1. Position traction unit on a level surface.
2. Lower the loader arms, stop the engine, and remove the key.
3. Open the rear access cover.
4. Place a drain pan under the filter (Figure 53).

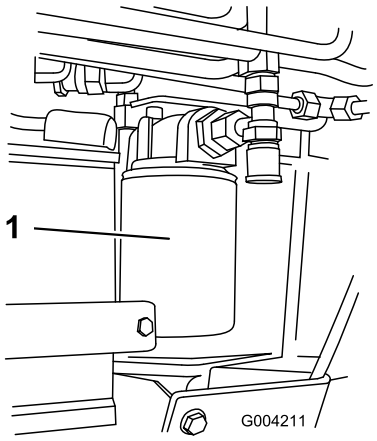

Figure 53

1. Hydraulic filter

5. Remove the old filter (Figure 53) and wipe the surface of the filter adapter gasket clean.
6. Apply a thin coat hydraulic fluid to the rubber gasket on the replacement filter.
7. Install the replacement hydraulic filter onto the filter adapter (Figure 53). Tighten it clockwise until the rubber gasket contacts the filter adapter, then tighten the filter an additional 3/4 turn.
8. Clean up any spilled fluid.
9. Start the engine and let it run for about two minutes to purge air from the system.
10. Stop the engine and check for leaks.

Hydraulic fluid escaping under pressure can penetrate skin and cause injury. Fluid injected into the skin must be surgically removed within a few hours by a doctor familiar with this form of injury or gangrene may result.

- **Keep your body and hands away from pin hole leaks or nozzles that eject high pressure hydraulic fluid.**
- **Use cardboard or paper to find hydraulic leaks, never use your hands.**

11. Check the fluid level in the hydraulic tank (refer to Checking the Hydraulic Fluid) and add fluid to raise the level to mark on dipstick. Do not over fill the tank.
12. Close the rear access cover.

Changing the Hydraulic Fluid

Service Interval: Every 400 hours/Yearly (whichever comes first)

Change the hydraulic fluid after every 400 operating hours or yearly.

1. Position the traction unit on a level surface.
2. Open the hood.
3. Install the cylinder lock, stop the engine, and remove the key.
4. Allow the traction unit to cool completely.
5. Remove the hydraulic tank cap and dipstick (Figure 54).

Note: The filler cap is behind the front screen. If you want to improve your access to it, remove the screen.

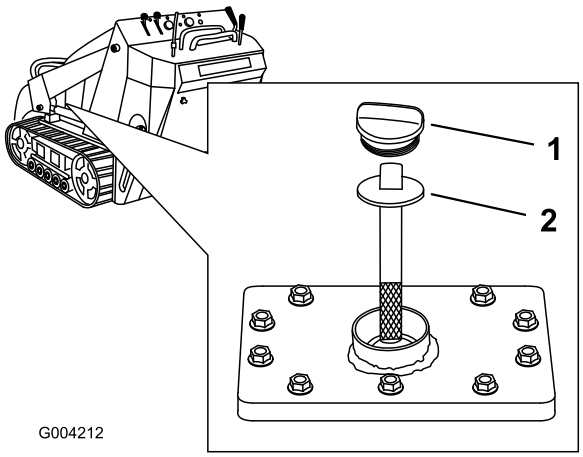

Figure 54

1. Filler neck cap
2. Dip stick

6. Place a large drain pain (capable of holding 15 US gallons) under the drain plug on the front of the traction unit (Figure 55).

   Note: The drain plug is located behind the front weight, under the muffler.

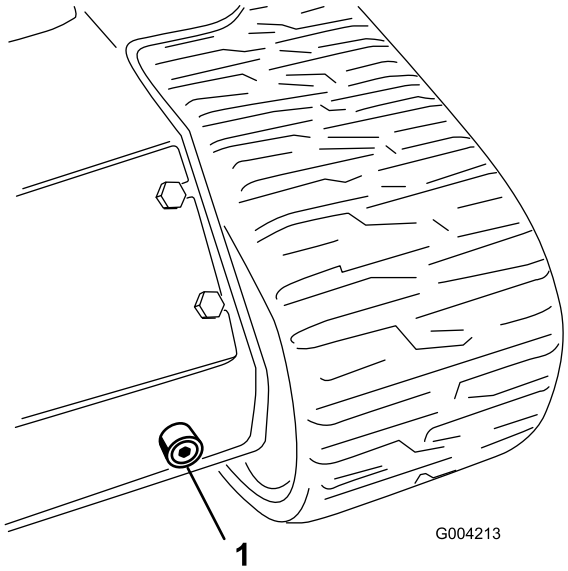

Figure 55

1. Drain plug

7. Remove the drain plug and allow the oil to drain into the pan (Figure 55).
8. When finished, install and tighten the drain plug.

   Note: Dispose of the used oil at a certified recycling center.

9. Fill the hydraulic tank with approximately 12 US gallons (45.4 l) of 10W-30 or 15W-40 detergent, diesel engine oil (API service CH-4 or higher); refer to Checking Hydraulic Fluid.
10. Start the engine and let it run for a few minutes.
11. Stop the engine.
12. Check the hydraulic fluid level and top it off if necessary; refer to Checking Hydraulic Fluid.
13. Close the hood.

Checking the Hydraulic Lines

Service Interval: Every 100 hours—Check the hydraulic lines for leaks, loose fittings, kinked lines, loose mounting supports, wear, weather, and chemical deterioration. (Make necessary repairs before operating.)

Every 1,500 hours/Every 2 years (whichever comes first)—Replace all moving hydraulic hoses.

Hydraulic fluid escaping under pressure can penetrate skin and cause injury. Fluid injected into the skin must be surgically removed within a few hours by a doctor familiar with this form of injury or gangrene may result.

- **Keep your body and hands away from pin hole leaks or nozzles that eject high pressure hydraulic fluid.**
- **Use cardboard or paper to find hydraulic leaks, never use your hands.**

Cleaning

Removing Debris from the Traction Unit

Service Interval: Before each use or daily

Important: Operating the engine with blocked screens, dirty or plugged cooling fins, and/or cooling shrouds removed, will result in engine damage from overheating.

1. Park the traction unit on a level surface, lower the loader arms, and stop the engine.
2. Remove the key and allow the engine to cool.
3. Open the hood.
4. Clean any debris from the front and side screens.
5. Wipe away debris from the air cleaner.
6. Clean any debris build-up on the engine and in the oil cooler fins with a brush or blower.

   Important: It is preferable to blow dirt out, rather than washing it out. If water is used, keep it away from electrical items and hydraulic valves. Do not use a high-pressure washer. High-pressure washing can damage the electrical system and hydraulic valves or deplete grease.
7. Clean debris from the cooler fan grill on the hood.
8. Close the hood.

Cleaning the Chassis

Service Interval: Every 100 hours—Check for dirt build-up in the chassis.

Over time, the chassis under the engine collects dirt and debris that must be removed. Using a flashlight, open the hood and inspect the area under the engine on a regular basis. When the debris is 1 to 2 inches deep, complete the following procedure (refer to Figure 56 throughout this procedure):

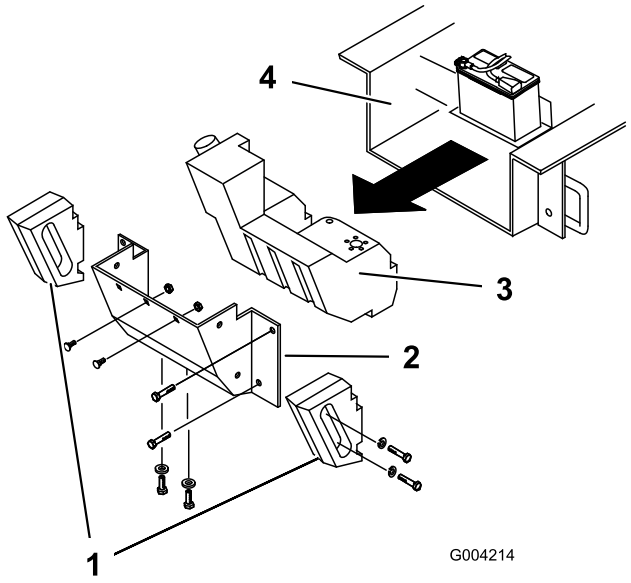

Figure 56

1. Side weights
2. Rear panel
3. Fuel tank
4. Chassis

1. Lift and support the front of the traction unit.
2. Stop the engine and remove the key.
3. Disconnect the negative battery cable.
4. Remove the bolts, washers, and lock washers securing the two side weights, removing the weights (Figure 56).
5. Open the rear access cover.
6. Remove the 2 carriage bolts and washers from the battery base.
7. Remove the six nuts and bolts securing the rear panel, removing the panel (Figure 56).
8. Loosen the tank cap to relieve pressure.
9. Place a clamp on the fuel line, 2 inches from where it comes out of the fuel tank.
10. Slide the fuel tank to the rear (Figure 56).
11. Disconnect the fuel line.
12. Disconnect the two wires leading to the right side of the tank (Figure 57).

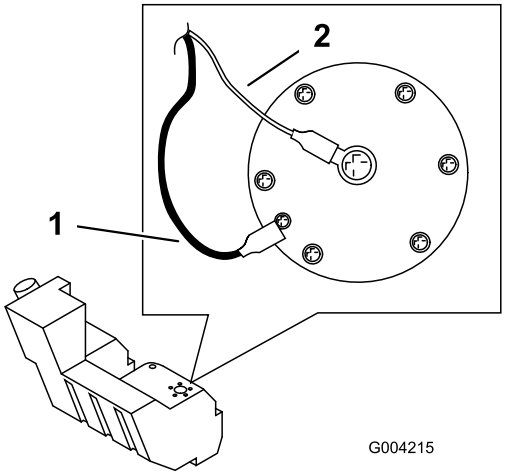

Figure 57

1. Black wire
2. Orange wire

13. Carefully remove the tank and set it upright to keep from spilling the gasoline.

In certain conditions, gasoline is extremely flammable and highly explosive. A fire or explosion from gasoline can burn you and others and can damage property.

- **Remove the fuel tank outdoors in an open area. Wipe up any gasoline that spills.**
- **Do not remove the fuel tank near an open flame or where gasoline fumes may be ignited by a spark.**
- **Do not smoke while handling the fuel tank.**

14. Remove any large deposits of debris.
15. Wash out the chassis with water until the water running out the back of the unit is clear.

    Important: Take care not to get water into the engine or electrical components.

16. Slide the fuel tank part way into the chassis (Figure 56).
17. Connect the fuel line and remove the clamp.
18. Secure the tank cap.
19. On the right side of the tank, connect the orange wire to the center post and the black wire to the outside post (Figure 57).
20. Slide the tank all the way into the traction unit.

    Important: The fuel line and wires must be away from the engine pulleys and the frame.

21. Replace the rear panel and secure it with the six bolts and nuts removed previously (Figure 56).
22. Secure the battery tray with the bolts and washers removed previously.
23. Install the side weights with the bolts, washers, and lock washers removed previously (Figure 56).
24. Close the rear access cover.
25. Lower the traction unit to the ground.

Storage

1. Lower the loader arms, stop the engine, and remove the key.
2. Remove dirt and grime from the external parts of the entire traction unit, especially the engine. Clean dirt and chaff from the outside of the engine cylinder head fins and blower housing.

   Important: You can wash the traction unit with mild detergent and water. Do not pressure wash the traction unit. Avoid excessive use of water, especially near the control panel, engine, hydraulic pumps, and motors.
3. Service the air cleaner; refer to Servicing the Air Cleaner.
4. Grease the traction unit; refer to Greasing the Traction Unit.
5. Change the crankcase oil; refer to Servicing the Engine Oil.
6. Change the crankcase oil; refer to Servicing the Engine Oil
7. Remove the spark plugs and check the condition of each; refer to Servicing the Spark Plugs.
8. With the spark plugs removed from the engine, pour two tablespoons of engine oil into each spark plug hole.
9. Place rags over the spark plug holes to catch any oil spray, then use the starter to crank the engine and distribute the oil inside the cylinder.
10. Install the spark plugs, but do not install the wires on the spark plugs.
11. Charge the battery; refer to Servicing the Battery.
12. For storage over 30 days, prepare the traction unit as follows:

    A. Add a petroleum based stabilizer/conditioner to fuel in the tank. Follow mixing instructions from stabilizer manufacturer. (1 oz. per US gallon). **Do not use an alcohol based stabilizer (ethanol or methanol).**

    Note: Fuel stabilizer/conditioner is most effective when mixed with fresh gasoline and used at all times.

    B. Run the engine to distribute conditioned fuel through the fuel system (5 minutes).

    C. Stop the engine, allow it to cool and drain the fuel tank using a pump type syphon.

    D. Restart the engine and run it until it stops.

    E. Choke the engine.

    F. Start and run the engine until it will not start again.

    G. Dispose of fuel properly. Recycle as per local codes.

    Important: Do not store stabilizer/conditioned gasoline over 90 days.
13. Check and adjust the track tension; refer to Adjusting the Track Tension.
14. Check and tighten all bolts, nuts, and screws. Repair or replace any part that is damaged.
15. Paint all scratched or bare metal surfaces. Paint is available from your Authorized Service Dealer.
16. Store the traction unit in a clean, dry garage or storage area. Remove the key from the ignition switch and keep it in a memorable place.
17. Cover the traction unit to protect it and keep it clean.

Troubleshooting

Problem	Possible Cause	Corrective Action
The starter does not crank	1. The battery is discharged. 2. The electrical connections are corroded or loose. 3. The relay or switch is damaged.	1. Charge the battery or replace it. 2. Check the electrical connections for good contact. 3. Contact your Authorized Service Dealer.
The engine will not start, starts hard, or fails to keep running.	1. The fuel tank is empty. 2. The choke is not on. 3. The air cleaner is dirty. 4. The spark plug wires are loose or disconnected. 5. The spark plugs are pitted, fouled, or the gap is incorrect. 6. There is dirt in the fuel filter. 7. Dirt, water, or stale fuel is in fuel system.	1. Fill the fuel tank with gasoline. 2. Move the choke lever fully forward. 3. Replace the air cleaner element. 4. Install the wires on the spark plugs. 5. Install new, correctly gapped spark plugs. 6. Replace the fuel filter. 7. Contact Authorized Service Dealer.
Engine loses power.	1. The engine load is excessive. 2. The air cleaner is dirty. 3. The oil level in crankcase is low. 4. The cooling fins and air passages under the engine blower housing are plugged. 5. The spark plugs are pitted, fouled, or the gap is incorrect. 6. There is dirt in the fuel filter. 7. Dirt, water, or stale fuel is in fuel system.	1. Reduce ground speed. 2. Replace the air cleaner element. 3. Check and add oil to the crankcase. 4. Remove any obstructions from the cooling fins and air passages. 5. Install new, correctly gapped spark plugs. 6. Replace the fuel filter. 7. Contact Authorized Service Dealer.
The engine overheats.	1. The engine load is excessive. 2. The oil level in crankcase is low. 3. The cooling fins and air passages under the engine blower housing are plugged.	1. Reduce ground speed. 2. Check and add oil to the crankcase. 3. Remove any obstructions from the cooling fins and air passages.
Abnormal vibration.	1. The engine mounting bolts are loose.	1. Tighten the engine mounting bolts.
The traction unit does not drive.	1. The parking brake is on. 2. The hydraulic fluid level low. 3. The tow valves are open. 4. The hydraulic system is damaged.	1. Release the parking brake. 2. Check and add hydraulic fluid. 3. Close the tow valves. 4. Contact Authorized Service Dealer.

Schematics

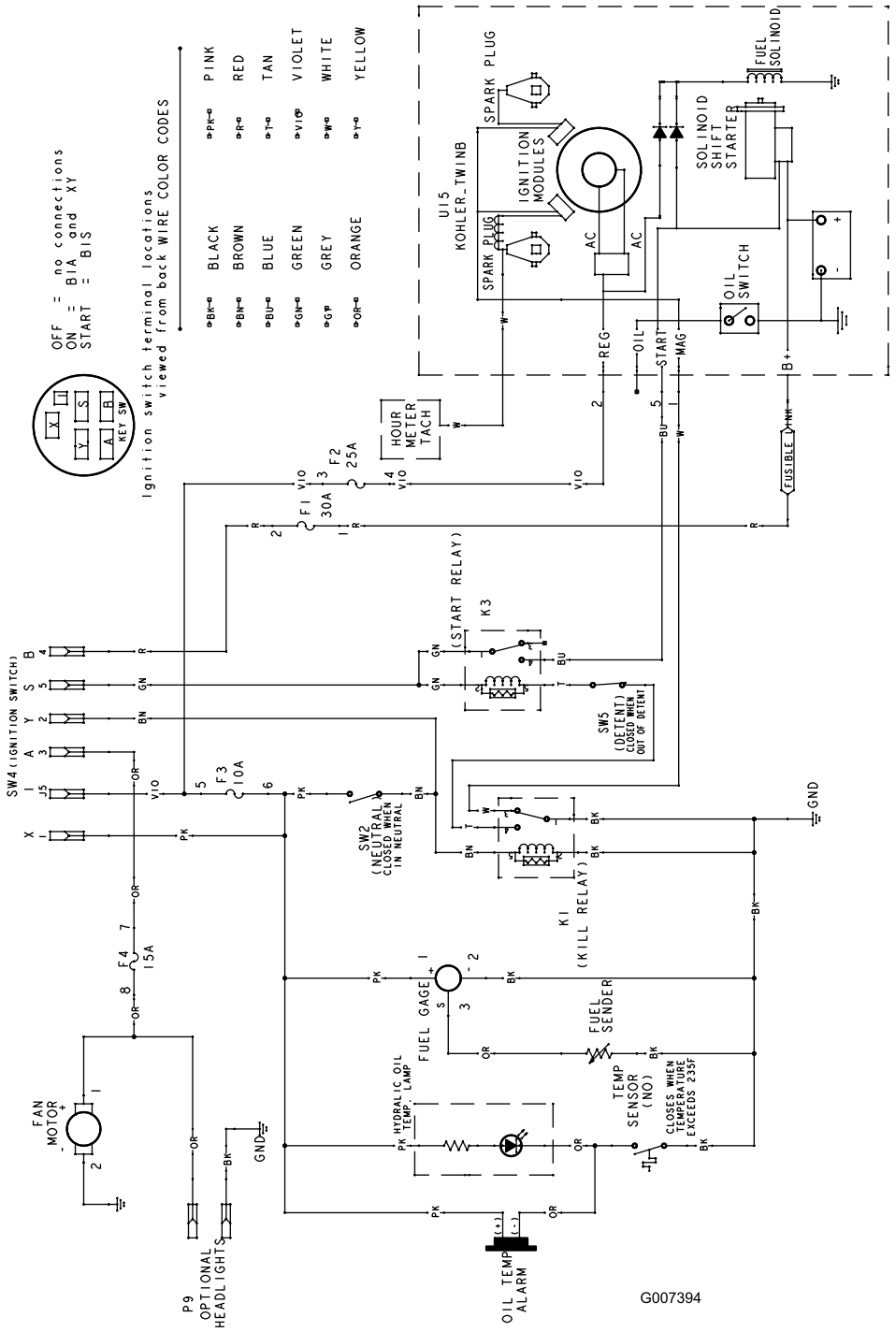

Electrical Schematic (Rev. B)

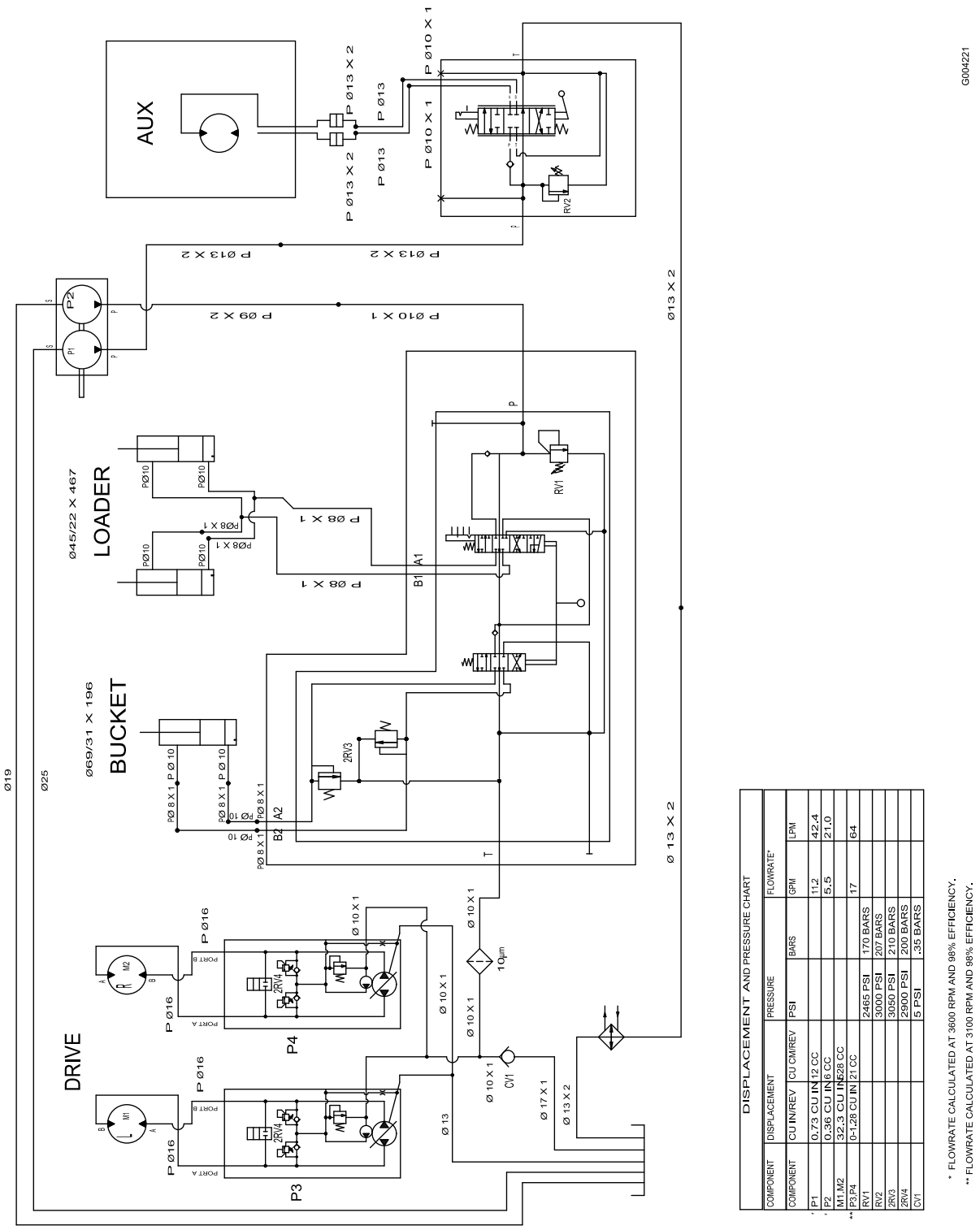

Hydraulic Schematic (Rev. A)

DISPLACEMENT AND PRESSURE CHART

COMPONENT	DISPLACEMENT	PRESSURE		FLOWRATE*	
COMPONENT	CU IN/REV / CU CM/REV	PSI	BARS	GPM	LPM
* P1	0.73 CU IN 12 CC			11.2	42.4
* P2	0.36 CU IN 6 CC			5.5	21.0
M1,M2	32.3 CU IN 528 CC				
** P3,P4	0-1.28 CU IN 21 CC			17	64
RV1		2465 PSI	170 BARS		
RV2		3000 PSI	207 BARS		
2RV3		3050 PSI	210 BARS		
2RV4		2900 PSI	200 BARS		
CV1		5 PSI	.35 BARS		

* FLOWRATE CALCULATED AT 3600 RPM AND 98% EFFICIENCY.

** FLOWRATE CALCULATED AT 3100 RPM AND 98% EFFICIENCY.

G004221

Notes:

Toro Compact Utility Equipment Warranty

A One-Year Limited Warranty

CUE Products

Conditions and Products Covered

The Toro® Company and its affiliate, Toro Warranty Company, pursuant to an agreement between them, jointly warrant your Toro Compact Utility Equipment ("Product") to be free from defects in materials or workmanship. The following time periods apply from the date of purchase:

Products	Warranty Period
Loaders, Trenchers and Attachments	1 year or 1000 operating hours, whichever occurs first
Kohler Engines	3 years
All other Engines	2 years

Where a warrantable condition exists, we will repair the Product at no cost to you including diagnosis, labor, and parts.

Instructions for Obtaining Warranty Service

If you think that your Toro Product contains a defect in materials or workmanship, follow this procedure:

1. Contact any Authorized Toro Compact Utility Equipment (CUE) Service Dealer to arrange service at their dealership. To locate a dealer convenient to you, access our website at www.Toro.com. You may also call our Toro Customer Care Department toll free at 888-865-5676 (U.S. customers) or 888-865-5691 (Canadian customers).
2. Bring the product and your proof of purchase (sales receipt) to the Service Dealer.

If for any reason you are dissatisfied with the Service Dealer's analysis or with the assistance provided, contact us at:

LCB Customer Service Department
Toro Warranty Company
8111 Lyndale Avenue South
Bloomington, MN 55420-1196
Toll Free: 888-865-5676 (U.S. customers)
Toll Free: 888-865-5691 (Canada customers)

Owner Responsibilities

You must maintain your Toro Product by following the maintenance procedures described in the *Operator's Manual*. Such routine maintenance, whether performed by a dealer or by you, is at your expense. Parts scheduled for replacement as required maintenance ("Maintenance Parts"), are warranted for the period of time up to the scheduled replacement time for that part. Failure to perform required maintenance and adjustments can be grounds for disallowing a warranty claim.

Items and Conditions Not Covered

Not all product failures or malfunctions that occur during the warranty period are defects in materials or workmanship. This express warranty does not cover the following:

- Product failures which result from the use of non-Toro replacement parts, or from installation and use of add-on, modified, or unapproved accessories
- Product failures which result from failure to perform required maintenance and/or adjustments
- Product failures which result from operating the Product in an abusive, negligent or reckless manner
- Parts subject to consumption through use unless found to be defective. Examples of parts which are consumed, or used up, during normal Product operation include, but are not limited to, digging teeth, tines, spark plugs, tires, tracks, filters, chains, etc.
- Failures caused by outside influence. Items considered to be outside influence include, but are not limited to, weather, storage practices, contamination, use of unapproved coolants, lubricants, additives, or chemicals, etc.
- Normal "wear and tear" items. Normal "wear and tear" includes, but is not limited to, worn painted surfaces, scratched decals or windows, etc
- Any component covered by a separate manufacturer's warranty
- Pickup and delivery charges

General Conditions

Repair by an Authorized Toro Compact Utility Equipment (CUE) Service Dealer is your sole remedy under this warranty. **Neither The Toro® Company nor Toro Warranty Company is liable for indirect, incidental or consequential damages in connection with the use of the Toro Products covered by this warranty, including any cost or expense of providing substitute equipment or service during reasonable periods of malfunction or non-use pending completion of repairs under this warranty. All implied warranties of merchantability and fitness for use are limited to the duration of this express warranty. Some states do not allow exclusions of incidental or consequential damages, or limitations on how long an implied warranty lasts, so the above exclusions and limitations may not apply to you**. This warranty gives you specific legal rights, and you may also have other rights which vary from state to state.

Except for the engine warranty coverage and the Emissions warranty referenced below, if applicable, there is no other express warranty.
The Emissions Control System on your Product may be covered by a separate warranty meeting requirements established by the U.S. Environmental Protection Agency (EPA) or the California Air Resources Board (CARB). The hour limitations set forth above do not apply to the Emissions Control System Warranty. Refer to the California Emission Control Warranty Statement printed in you operator's manual or contained in the engine manufacturer's documentation for details.

Countries Other than the United States or Canada

Customers who have purchased Toro products exported from the United States or Canada should contact their Toro Distributor (Dealer) to obtain guarantee policies for your country, province, or state. If for any reason you are dissatisfied with your Distributor's service or have difficulty obtaining guarantee information, contact the Toro importer. If all other remedies fail, you may contact us at Toro Warranty Company.

Part Number 374-0198 Rev. A