Form No. 3326-250 Rev A

Air Conditioning Mounting Kit

Groundsmaster 4000-D/4100-D Traction Unit

Model No. 30427

Installation Instructions

Note: The Air Conditioner Mounting Kit is to be used in conjunction with the Sanden Corporation Compressor, Part No. SD-505 (5012).

1. Position the machine on a level surface. Set the parking brake, lower the cutting units, turn the ignition off and remove the key.

If you leave the key in the ignition switch, someone could accidently start the engine and seriously injure you or other bystanders.

Remove the key from the ignition switch before you do any maintenance.

2. Remove the battery cover.
3. Remove the negative battery cable from the battery post.
4. Remove the bolts and washers securing the alternator and shield to the adjusting arm and mounting bracket (Figure 1). Retain the alternator and fasteners for installation with the new components. Discard the shield.

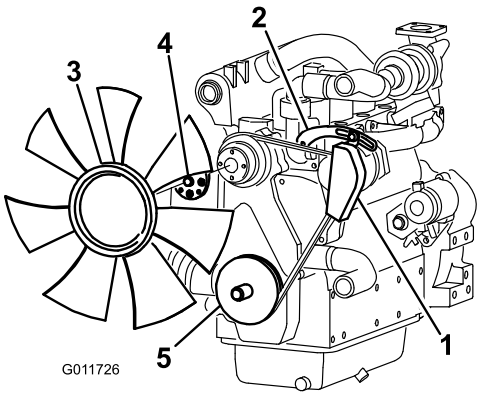

Figure 1

1. Alternator & shield
2. Alternator adjusting arm
3. Fan w/clutch
4. Fan adapter
5. Crankshaft pulley
6.

5. Discard the alternator belt.
6. Remove the bolt securing the alternator adjusting arm to the engine (Figure 1).
7. Remove the hose from the air cleaner and the radiator shroud (Figure 2). Drain the radiator.
8. Remove the upper and lower radiator hoses (Figure 2).
9. Install the upper radiator hose in the lower hose position. Do not install the lower radiator hose at the upper location at this time.
10. Remove the (4) bolts securing the fan clutch to the adapter (Figure 1). Remove the fan and the fan clutch.

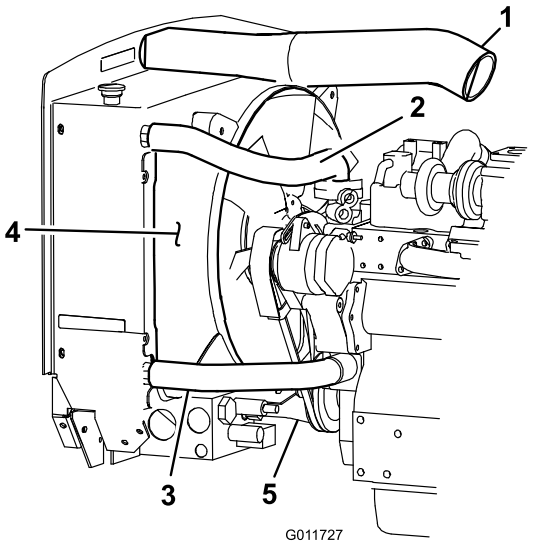

Figure 2

1. Air cleaner hose
2. Upper radiator hose
3. Lower radiator hose
4. Radiator shroud
5. Hydraulic line

11. Remove the (4) bolts and washers securing the fan shroud to the radiator (Figure 2). Remove fan shroud.
12. Remove the (4) socket head bolts securing the fan adapter to the alternator pulley (Figure 1).
13. On traction units with the engine serial numbers prior to 1W0001, the engine crankshaft pulley must be removed and replaced. The engine serial number is on a plate located by the injection pump (Figure 3). Remove the crankshaft pulley (Figure 1) and replace it with Toro Part No. 105-4576. Torque the nut to 101-116 ft./lbs. (137-157 N-m). Use caution when tightening the nut not to damage the crank shaft seal by placing side load on the crankshaft.

© 2009—The Toro® Company
8111 Lyndale Avenue South
Bloomington, MN 55420

Register at www.Toro.com.

Original Instructions (EN)
Printed in the USA.
All Rights Reserved

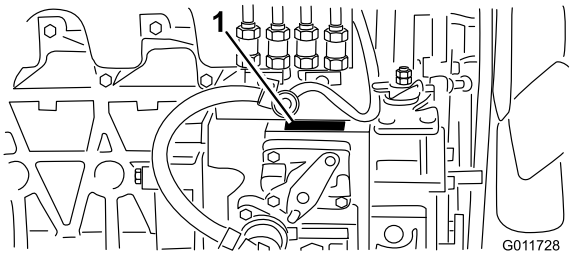

Figure 3

1. Engine serial number

14. On traction units with serial numbers prior to 210000359, disconnect and remove the hydraulic line (Figure 2) between the rear traction manifold and the filter manifold. Replace with Toro Part No. 105-4508.

15. Mount the new double pulley (Figure 4) to the crank shaft pulley with (3) M8-1.25 x 50 mm bolts and 5/16 lockwashers. Torque the fasteners to 21-23 ft./lbs. (28-31 N-m).

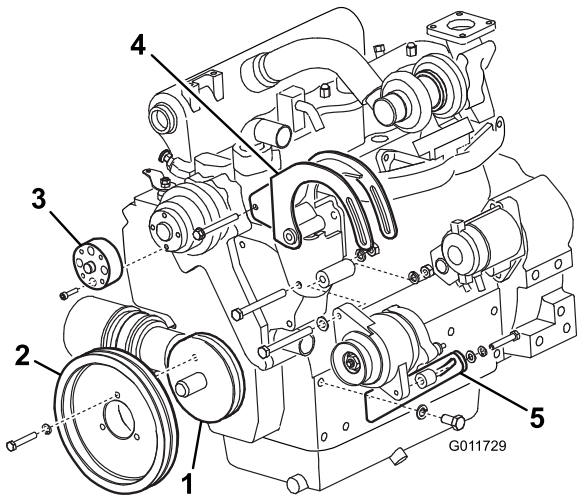

Figure 4

1. Crank shaft pulley
2. Double pulley
3. Fan adapter
4. Bracket
5. Alternator support

16. Mount the new fan adapter (Figure 4) to the alternator pulley with (4) M6 x 25 mm socket head bolts. Torque to 8-10 ft./lbs. (11-14 N-m).

17. Reinstall the fan shroud to the radiator with the fasteners previously removed.

18. Reinstall the fan/clutch to the fan adapter with the fasteners previously removed.

19. Loosely mount the compressor (Figure 5) to the pivot holes in the bracket with a spacer, M10-1.50 x 140 mm bolt, spring lockwasher and nut. Position the spacer between the compressor and the bracket as shown in Figure 5.

20. Using the old alternator mounting bracket bolt and a M10 x 100 mm bolt, lockwasher and nut, mount the new bracket (Figure 4) to the engine at the same locations the alternator was mounted.

21. Loosely mount each end of the compressor (Figure 5) to a slot in the bracket with a 1-3/8-16 x 3/8" bolt, (2) flat washers, spacer, lockwasher and nut. Position the fasteners as shown in Figure 5.

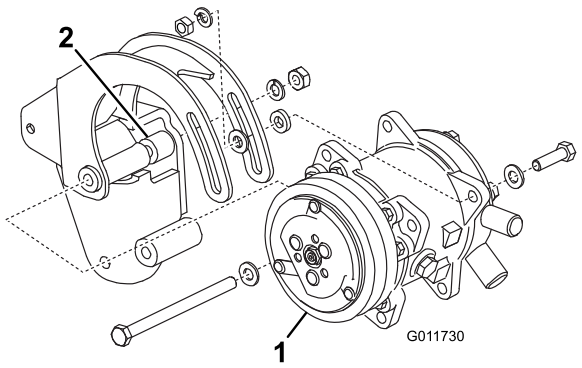

Figure 5

1. Compressor
2. Spacer

22. Mount the new alternator support to the engine with a M12-1.25 x 25 mm bolt and M12 lock washer. Position the support as shown in Figure 4.

23. Loosely mount the alternator to the bracket (Figure 4) with the old pivot bolt.

24. Loosely mount the alternator to the support (Figure 4) with a M8-1.25 x 50 mm bolt, 5/16 lock washer, .344 x .688 flat washer and spacer.

25. Install the alternator belt.

26. Install the compressor belts.

27. Tension the belts as follows:

    - Proper tension will allow 3/8 in. (10 mm) deflection when a force of 10 lb. is applied midway between the pulleys.
    - Tighten the mounting bolts.

28. Install the old lower radiator hose in the upper hose position. Replenish the radiator with a 50/50 mixture of water and ethylene glycol anti-freeze. Refer to the Operator's Manual for filling instructions.

29. Reinstall the hose to the air cleaner and radiator shroud.

30. Reattach the negative battery cable to the battery post.

31. Reinstall the battery cover.