FORM NO. 3317–360

TORO®

MODEL NO. 26631BC–5900001 & UP

PARTS CATALOG

53cm REAR BAGGING MOWER

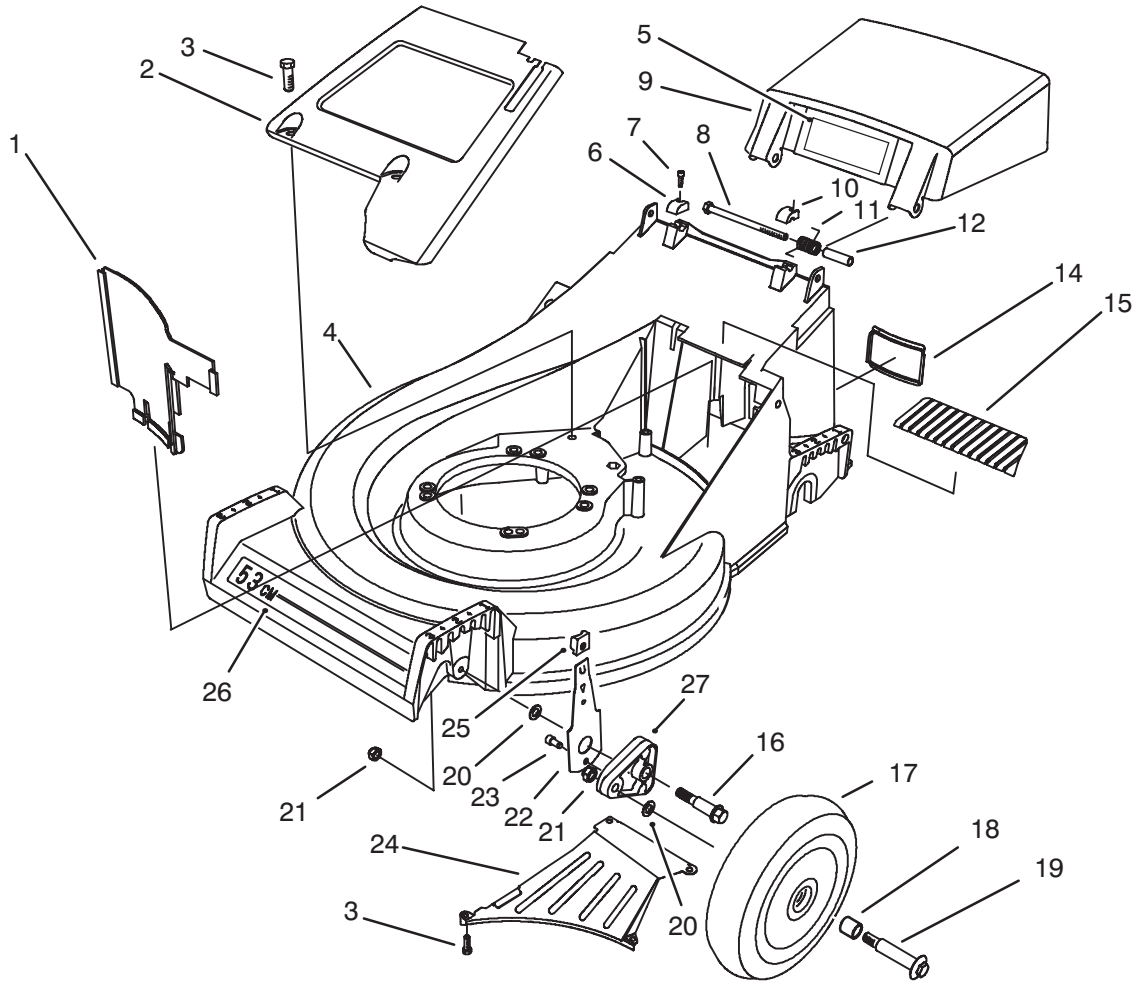

HOUSING ASSEMBLY

Ref. No.	Part No.	Description	No. Used
1	66–0020	Panel – Vertical	1
2	65–5660	Panel – Screen	1
3	32144–70	Screw – Cap Hex. Hd.	6
4	16–1769	Housing – 53cm (Incl. Ref. #26)	1
5	93–4105	Decal – Bag Door	1
6	71–7910	Cap – Hinge Bolt R.H.	1
7	65–5210	Screw – Thread Forming	2
8	322–29	Screw – Hex Hd. Cap	2
9	71–9800	Door – Discharge	1
10	71–7900	Cap – Hinge Bolt L.H.	1
11	71–9840	Spring – Door	2
12	71–8580	Spacer – Door	2
14	71–9650	Access – Cover	1

Ref. No.	Part No.	Description	No. Used
15	71–9920	Cover – Top	1
16	66–0560	Screw – Shoulder	2
17	14–9949	Wheel & Tire Assembly (Incl. Ref. #18)	2
18	27–6250	Bushing – Wheel	4
19	27–6231	Bolt – Wheel	2
20	40–1940	Washer – Wheel Bolt	4
21	3296–6	Nut – Lock	4
22	66–0540	Arm – Spring Front	2
23	65–5220	Screw – Cap Socket Hd.	2
24	71–9640	Ramp – Discharge	1
25	25–7740	Knob – Arm	2
26	71–9870	Decal – Deck 53cm	1
27	66–0580	Arm – Pivot Front	2

© The TORO Company –1994
All Rights Reserved

TPS

3317–360

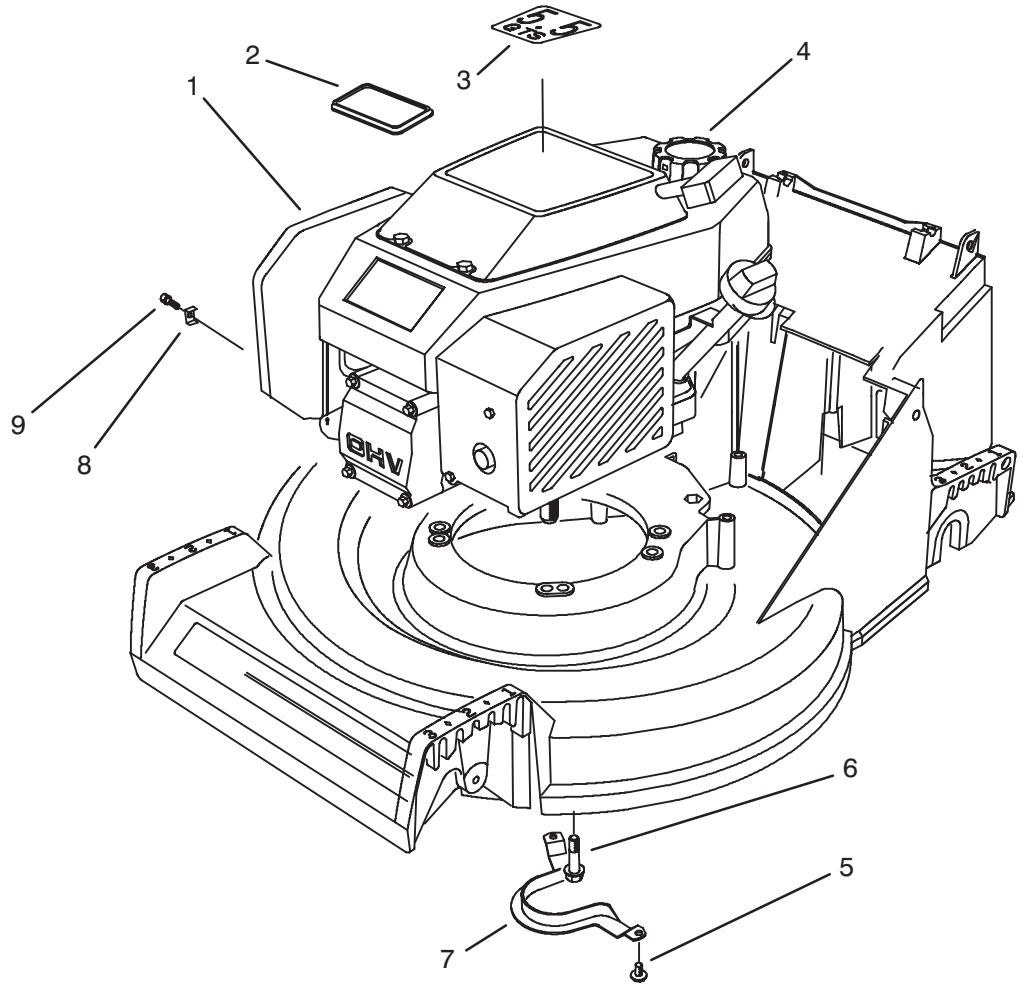

C–1582

ENGINE ASSEMBLY

Ref. No.	Part No.	Description	No. Used
1	77–8981	Engine – OHV (Incl. Ref. #2 & 4)	1
2	92–2289	Plate – TORO Logo	1
3	93–4355	Decal – Recoil	1
4	93–7198	Gas Cap Assembly	1
5	32144–70	Screw – Hex. Hd. Cap	2

Ref. No.	Part No.	Description	No. Used
6	32144–102	Screw – Hex. Hd. Cap	3
7	66–0570	Guide – Belt	1
8	2210–249	Clamp – Casing	1
9	86–7990	Screw – Clamp	1

*Not Illustrated

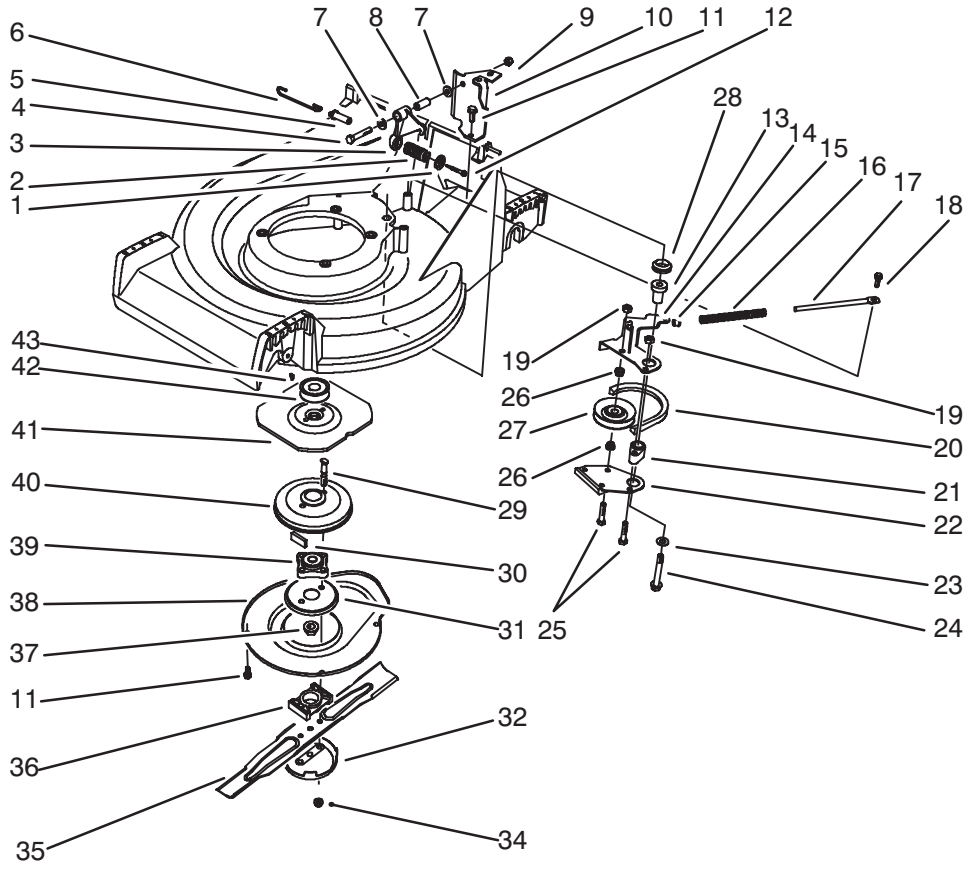

C–0525

BLADE BRAKE CLUTCH ASSEMBLY

Ref. No.	Part No.	Description	No. Used
1	65–5280	Retainer – Spring	1
2	71–3630	Spring – Compression	1
3	65–5700	Crank	1
4	322–21	Screw – Hex. Hd. Cap	1
5	71–3660	Pin – BBC Spring	1
6	71–3650	Link – Control	1
7	3256–23	Washer – Flat	2
8	65–5690	Bushing – Bellcrank	1
9	32128–44	Nut – Lock	1
10	66–0030	Bracket – Cable Support	1
11	32144–70	Screw – Hex. Hd. Cap	5
12	46–7040	Screw – Hex. Hd. Cap	1
13	65–5720	Bushing – BBC	1
14	66–0090	Lever – Brake	1
15	66–0350	Bushing – Flange	1
16	71–3640	Spring – Compression	1
17	65–5320	Rod – Brake Spring	1
18	65–5670	Bolt – Shoulder	1
19	3296–42	Nut – Lock	2
20	65–5740	Belt – BBC	1
21	65–5070	Hub – Brake Plate	1

Ref. No.	Part No.	Description	No. Used
22	65–5780	Brake Plate Assembly	1
23	65–5380	Washer	1
24	32144–105	Screw – Hex. Hd. Cap	1
25	321–13	Screw – Hex. Hd. Cap	2
26	65–5130	Hub – Idler Pulley	2
27	46–5650	Idler Pulley Assembly	1
28	253–151	Seal – V–Ring	1
29	42–3190	Screw – BBC	2
30	52–3480	Dampner – Vibration	2
31	65–5330	Screen – BBC	1
32	80–2770	Cup – Anti Scalp	1
34	54–9190	Nut – Lock	2
35	62–7700	Blade – 21”	1
36	62–4280	Spacer – Blade	1
37	3296–33	Nut – Lock	1
38	65–5200	Cover – BBC	1
39	42–6890	Hub Assembly	1
40	62–3890	Drum – Brake	1
41	65–5300	Flywheel – BBC	1
42	62–7560	Pulley – Engine	1
43	3257–17	Key – Woodruff	1

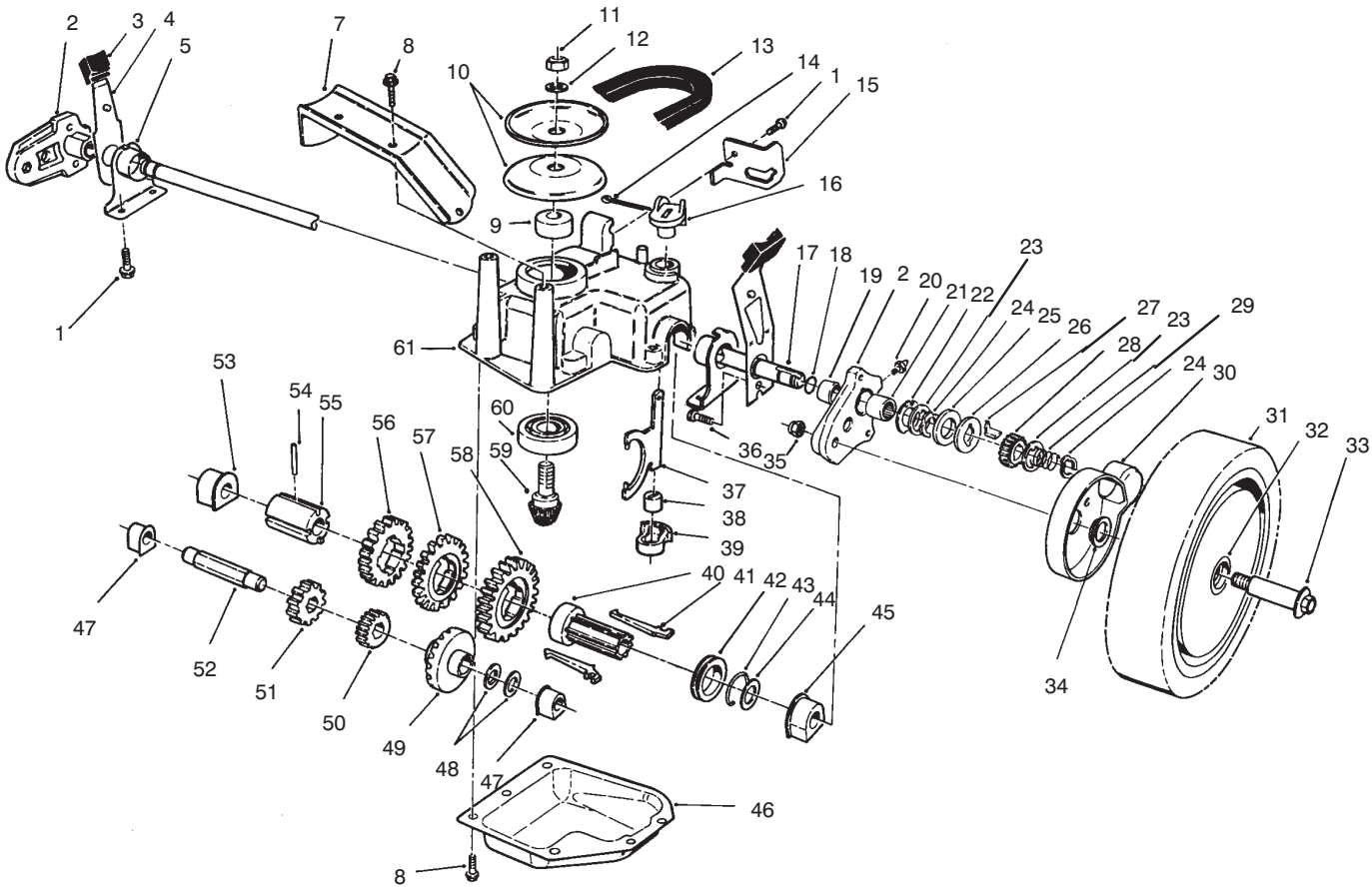

GEAR CASE ASSEMBLY

Ref. No.	Part No.	Description	No. Used
1	32144–70	Screw – Hex. Washer Hd.	5
2	65–5042	Pivot Arm Assembly (Incl. Ref. #19–21)	2
3	25–7740	Knob – Arm	2
4	65–5440	Spring Arm Assembly	2
5	66–0360	Cap – End	2
7	65–5190	Bracket – Belt Guide	1
8	49–2040	Screw – Self Tapping	8
9	62–6660	Spacer	1
10	60–8840	Pulley – Half	2
11	3296–5	Nut – Lock	1
12	3256–24	Washer – Flat	1
13	36–8070	V–Belt	1
14	3272–5	Pin – Cotter	1
15	76–2930	Retainer – Cable	1
16	76–0920	Lever – Shift	1
17	65–4770	Shaft – Output	1
18	237–153	Seal – "O"Ring	2
19	70–9760	Bushing – Sleeve	2
20	302–56	Fitting – Grease	2
21	48–2060	Bearing –Needle	2
22	65–4730	Washer – Thrust (Inner)	2
23	65–4740	Washer – Thrust (Keyed)	4

Ref. No.	Part No.	Description	No. Used
24	65–2720	Ring – Retaining	4
25	65–4710	Ring – Friction	2
26	65–4760	Washer –Clutch	2
27	66–6050	Key – Rocking (L.H.)	1
*	66–6040	Key – Rocking (R.H.)	1
28	65–4750	Pinion	2
29	65–4720	Spring – Compression	2
30	74–1660	Cover – Wheel	2
31	14–9959	Wheel Tire & Gear Assy. (Incl. Ref. #32)	2
32	27–6250	Bushing – Wheel	4
33	27–6231	Bolt – Wheel	2
34	74–1670	Spacer – Wheel Cover	2
35	3296–6	Nut – Lock	2
36	65–5220	Screw – Socket Hd. Cap	2
37	60–8870	Yoke – Shift	1
38	29–9570	Bushing – Yoke	1
39	60–8810	Retainer – Shift Fork	1
40	76–0780	Sleeve – Shift Key	1
41	76–0760	Key – Shift	2
42	76–0770	Collar – Shift	1
43	65–5250	Clip – Spring	1
44	36–4780	Washer – Thrust	1

*Not Illustrated

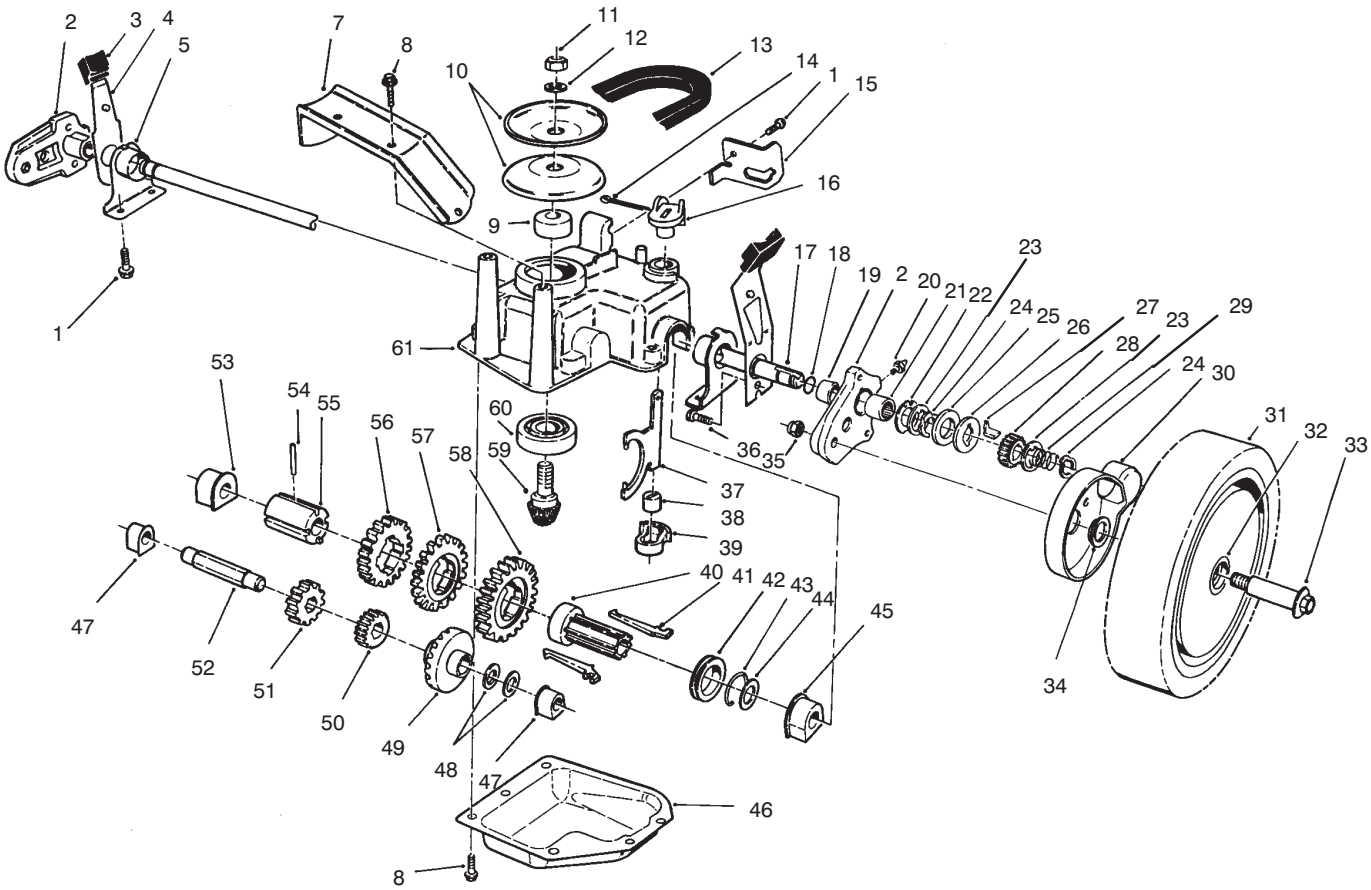

C–1555

GEAR CASE ASSEMBLY (Continued)

Ref. No.	Part No.	Description	No. Used
45	60–8770	Bushing – Output Shaft	1
46	60–8730	Cover – Gear Case	1
47	60–8750	Bushing – Intrmdt. Shaft	2
48	36–4791	Washer – Thrust	2
49	55–3760	Gear – Pinion 15T	1
50	55–3780	Gear – Pinion 20T	1
51	55–3800	Gear – Pinion 25T	1
52	60–8800	Shaft – Intermediate	1
53	60–8850	Bushing – Output Shaft	1

Ref. No.	Part No.	Description	No. Used
54	32121–120	Pin – Coil	1
55	60–8790	Sleeve – Gear	1
56	55–3810	Gear – 39T (3rd Gear)	1
57	55–3790	Gear – 44T (2nd Gear)	1
58	55–3770	Gear – 49T (1st Gear)	1
59	60–8890	Pinion – Bevel	1
60	38–7820	Bearing – Ball	1
61	60–8710	Case – Gear (Upper)	1
*	62–6673	Gear Case Assy. Complete	1

*Not Illustrated

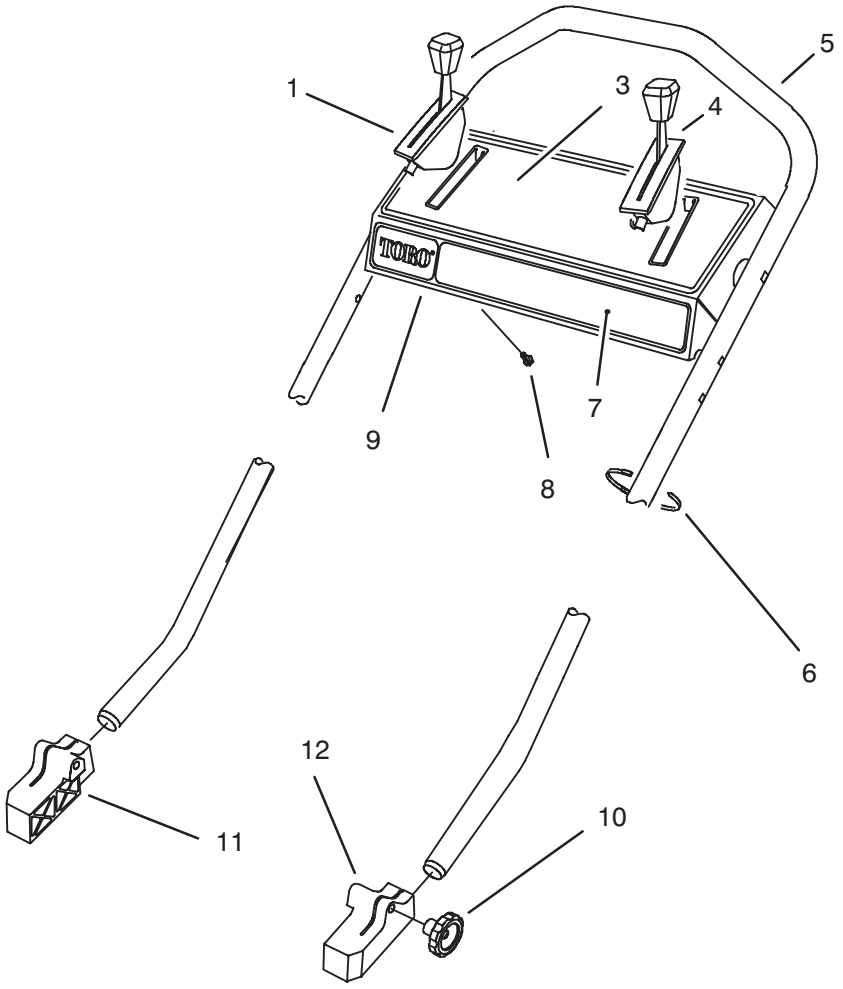

C–1569A

HANDLE ASSEMBLY

Ref. No.	Part No.	Description	No. Used
1	93–6632	Control – Ground Speed	1
3	93–6656	Decal – Instruction	1
4	93–6630	Control – Throttle	1
5	93–6637	Handle	1
6	3290–378	Tie – Cable	5
7	71–9872	Decal – Panel	1

Ref. No.	Part No.	Description	No. Used
8	92–9665	Screw – Self Tapping	4
9	16–8969	Control Panel Assembly (Incl. Ref. #3 & 7)	1
10	19–4050	Knob – Handle Release	2
11	71–8100	Mount – Handle R.H.	1
12	71–8090	Mount – Handle L.H.	1

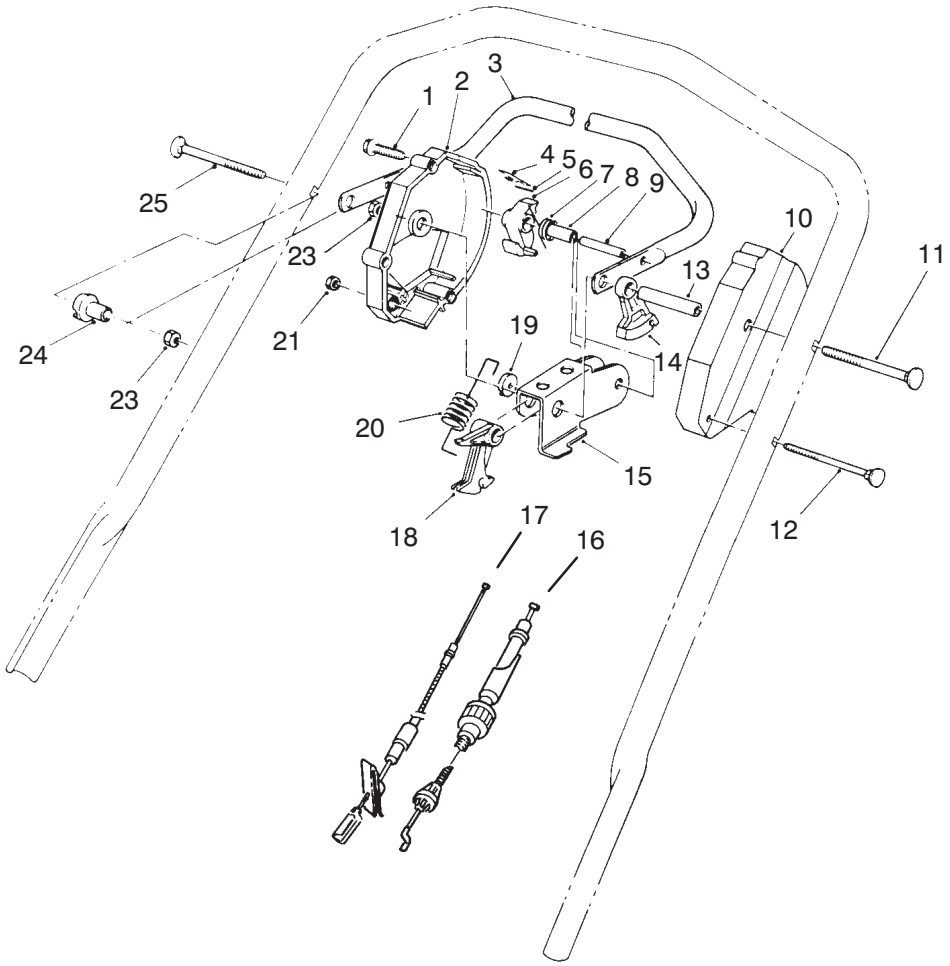

C–1581

TRACTION CONTROL ASSEMBLY

Ref. No.	Part No.	Description	No. Used
1	46–7040	Screw – Hex. Washer Hd.	3
2	66–0160	Housing – Control R.H.	1
3	52–7430	Control Bar Assembly	1
4	52–7410	Spring – Leaf	1
5	57–6290	Pin – Insert	1
6	46–5530	Hook – Control	1
7	46–5510	Spring – Torsion	1
8	46–5550	Bushing – Sleeve	1
9	32121–9	Pin – Coil	1
10	46–5460	Housing – Control (L.H.)	1
11	17–9425	Screw – Handle	1
12	46–6431	Screw – Handle	1

Ref. No.	Part No.	Description	No. Used
13	46–5590	Spacer	1
14	46–5520	Lever – Traction	1
15	66–0180	Rocker	1
16	93–6633	Cable – Traction	1
17	93–6629	Cable – Clutch	1
18	46–5540	Lever – Cable	1
19	66–0170	Washer – Nylon	1
20	66–0190	Spring – Detent	1
21	3296–8	Nut – Lock	1
23	3296–58	Nut – Lock	2
24	66–0330	Support – Spacer	1
25	17–9426	Screw – Handle	1

3317–360

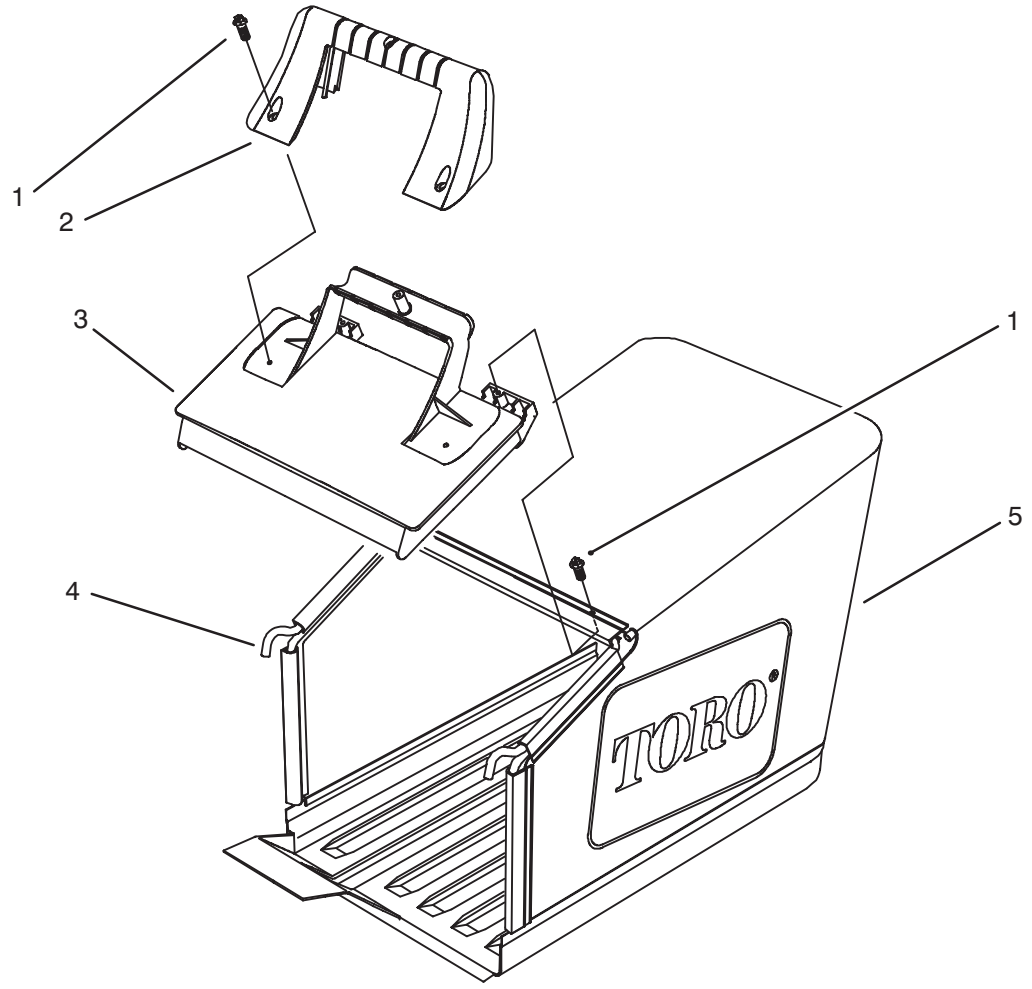

C–1570

GRASS BAG ASSEMBLY

Ref. No.	Part No.	Description	No. Used
1	32144–111	Screw – Index Hex Washer Head	5
2	71–9480	Handle – Door	1
3	71–9470	Door – Bag	1
4	71–9930	Frame – Grass Bag	1
5	71–9680	Bag – Grass 53cm	1

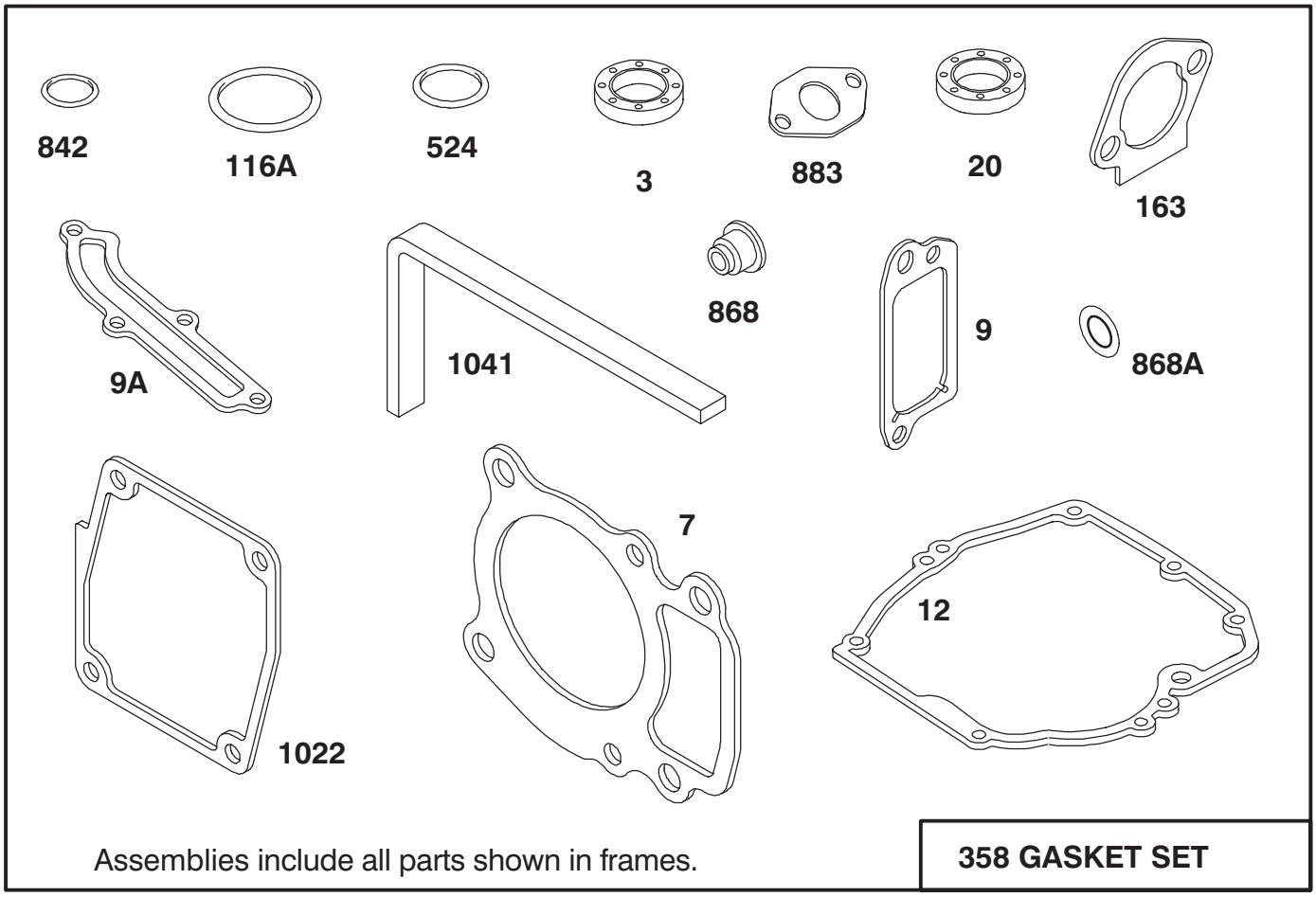

Assemblies include all parts shown in frames.

358 GASKET SET

ENGINE GTS 150

Ref. No.	Part No.	Description	No. Used
3	77–9060	Seal – Oil	1
7	77–7740	Gasket – Cylinder Head	1
9	77–9250	Gasket – Valve Cover	1
9A	77–7410	Gasket – Breather	1
12	77–7550	Gasket – Engine Base	1
20	77–7570	Seal – Oil	1
116A	77–7660	Seal – O Ring	1
163	77–7960	Gasket – Air Cleaner	1
358	77–8900	Gasket Set	1

Ref. No.	Part No.	Description	No. Used
524	77–7270	Seal – Intake Elbow	1
842	77–7300	Seal – O Ring	1
868	77–7890	Seal Assy – Valve	1
868A	77–7900	Gasket – Valve	1
883	77–7760	Gasket – Exhaust	1
1022	77–7320	Gasket – Rocker Cover	1
1041	77–8590	Seal – Foam	1

ENGINE GTS–150

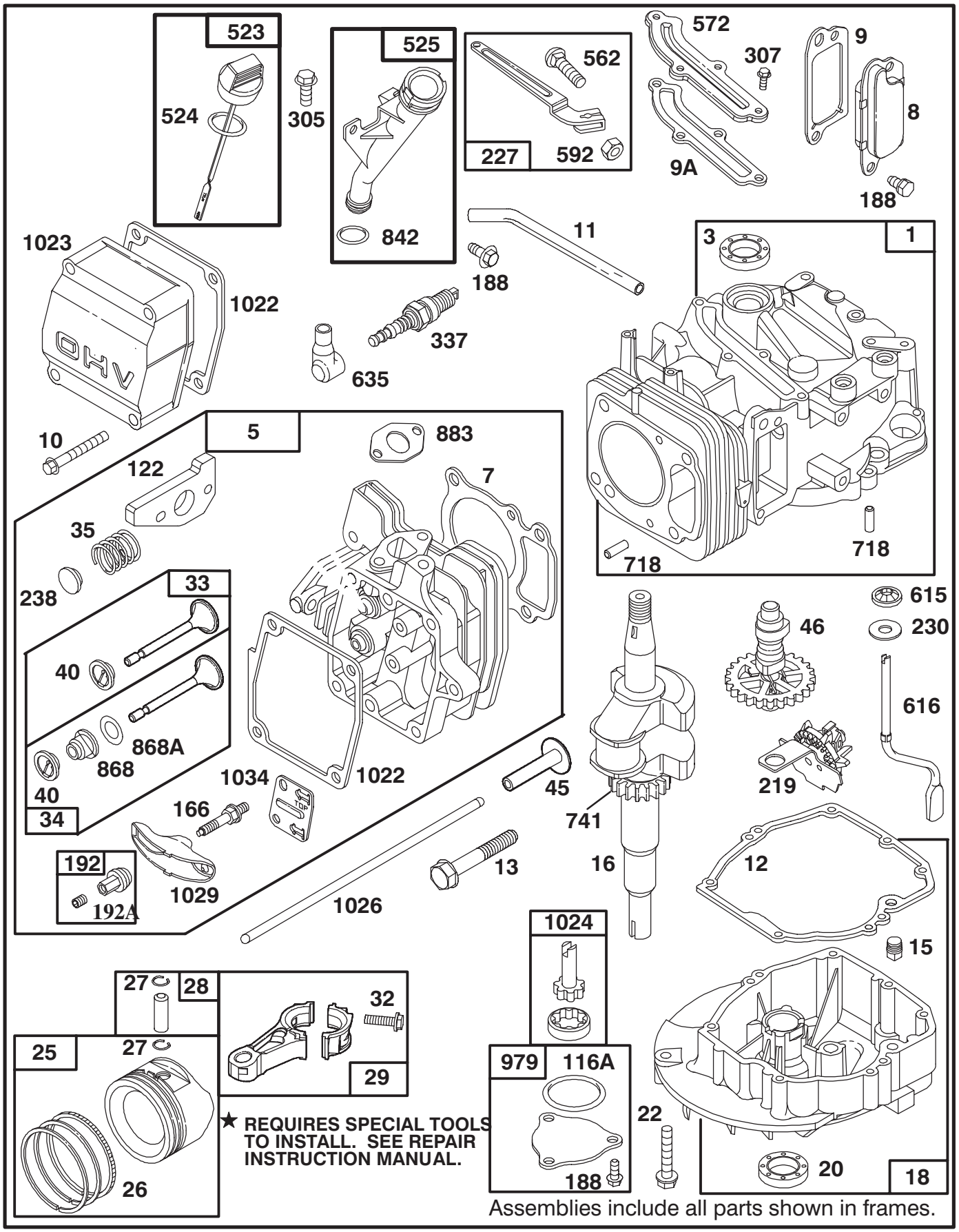

Assemblies include all parts shown in frames.

ENGINE GTS–150

Ref. No.	Part No.	Description	No. Used
1	77–7590	Cylinder Assy.	1
*3	77–9060	Seal – Oil	1
5	77–7730	Head – Cylinder	1
*7	77–7740	Gasket – Cylinder Head	1
8	77–9260	Breather – Valve	1
*9	77–9250	Gasket – Valve Cover	1
*9A	77–7410	Gasket – Breather	1
10	77–7360	Screw – Hex. Head (valve cover)	4
11	77–7350	Tube – Breather	1
*12	77–7550	Gasket – Engine Base	1
13	77–7630	Screw – Cylinder Head	4
15	77–9240	Plug – Oil Drain	1
16	77–7510	Crankshaft Note: Order Part No 77–7540 For Timing Gear Key	1
18	77–7560	Base – Engine	1
*20	77–7570	Seal – Oil	1
22	77–9070	Screw – Engine Base Note: Order Prt No.77–9080 For Hole Nearest Breather	7
25	77–7690	Piston Assy. (Std.)	1
26	77–7700	Ring Set (Std.)	1
27	77–7710	Lock – Piston Pin	2
28	77–7720	Pin – Piston (Std)	1
29	77–7670	Rod – Connecting	1
32	77–7680	Screw – Connecting Rod	2
33	77–7860	Valve – Exhaust	1
34	77–7880	Valve – Intake	1
35	77–7810	Spring – Valve	2
40	77–7870	Retainer – Spring	2
45	77–7610	Tappet – Valve	2
46	77–7490	Gear – Cam	1
*116A	77–7660	Seal – O Ring	1
†122	77–7820	Adapter Assy.	1
166	77–7780	Stud – Rocker Arm	2
188	77–7450	Screw – Sem (Breather Mounting, pump cover)	5
192	77–7910	Nut – Hex Special	2
192A	77–9090	Screw – Set	2
219	77–7500	Gear – Governor	1
227	77–7370	Lever.– Governor	1
230	77–7470	Washer – Thrust	1
238	77–7800	Cap – Valve	2
305	77–8310	Screw – Hex. Head	2
307	77–7420	Screw – Sem (breather cover)	4
337	77–7330	Plug – Spark	1
523	77–7260	Dipstick – Oil	1
*524	77–7270	Seal – Intake Elbow	1
525	77–7290	Tube – Oil Filler	1
562	77–7380	Bolt – Governor Lever	1
572	77–7400	Baffle – Cylinder	1
592	77–7390	Nut – Hex.	1
615	77–7480	Fastener	1
616	77–7460	Crank – Governor	1
635	77–7340	Elbow – Spark Plug	1
718	77–7600	Dowel – Sleeve	2
741	77–7530	Gear – Timing	1
*842	77–7300	Seal – O Ring	1
*868	77–7890	Seal Assy. – Valve	1
*868A	77–7900	Gasket – Valve	1
*883	77–7760	Gasket – Exhaust	1
979	77–7650	Cover – Oil Pump	1
*1022	77–7320	Gasket – Rocker Cover	1
1023	77–7060	Cover – Valve	1
1024	77–7640	Pump – Oil	1
1026	77–7620	Rod – Push	2
1029	77–7790	Arm – VLV Rocker	2
1034	77–7770	Guide – Push Rod	1
*	77–9280	Short Block (Incl. Ref. #1, 7, 9, 9A, 16, 18, 25, 28, 29, 45, 46, 122, 219, 230, 615, 616, 883, 979, 1022, & 1024 pg. 10) (Incl. Ref. #163 pg.12)	1

*Included in Gasket Set
†Included in Carburetor Overhaul Kit

ENGINE GTS–150

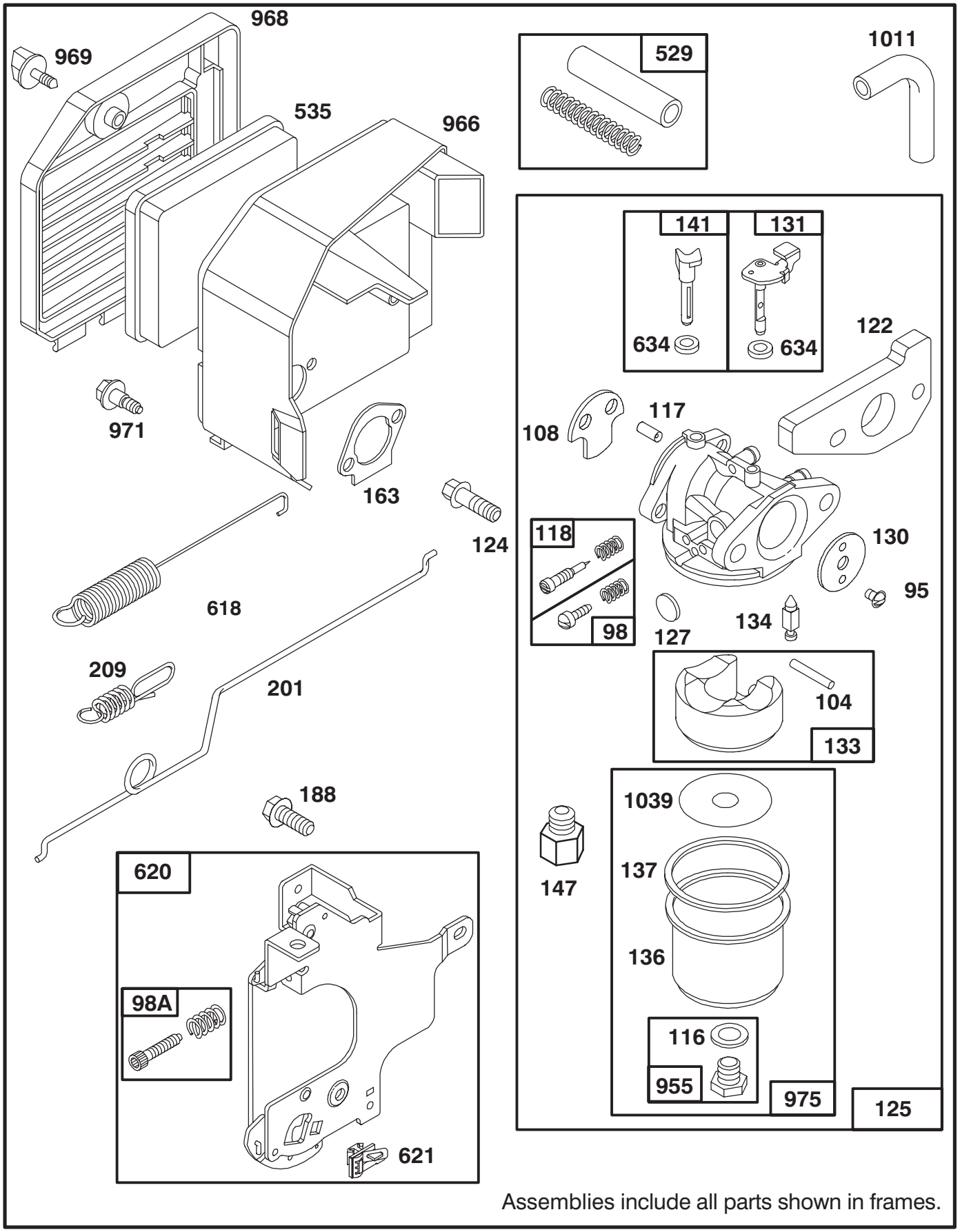

Assemblies include all parts shown in frames.

ENGINE GTS–150

Ref. No.	Part No.	Description	No. Used
95	77–8090	Screw – Round Head	1
98	77–8240	Screw – Idle Adj.	1
98A	77–8020	Screw Assy – Speed Adj.	1
†104	77–8180	Pin – Float Hinge	1
108	77–8070	Valve – Choke	1
†116	77–8210	Washer – Fuel Bowl	1
†117	77–8060	Jet – Needle Valve	1
†118	77–8230	Valve & Kit – Needle	1
†122	77–7820	Adapter Assy.	1
124	77–7970	Screw – Hex Head (carburetor mounting)	2
125	77–8050	Carburetor Assy	1
†127	77–8100	Plug – Welch	1
130	77–8080	Valve – Throttle	1
131	77–8160	Shaft – Throttle	1
133	77–8170	Float – Carburetor	1
†134	77–8110	Valve – Float (Includes Seat)	1
136	77–7240	Bowl – Fuel	1
†137	77–8200	Gasket – Fuel Bowl	1
141	77–8130	Shaft – Choke	1
147	77–8120	Adapter – Jet Note: For High Altitude Jet, Order Part No. 77–9000	1

Ref. No.	Part No.	Description	No. Used
*163	77–7960	Gasket – Air Cleaner	1
188	77–7450	Screw – Hex. Head (connecting bracket)	2
201	77–7980	Link – Governor	1
209	77–7990	Spring – Governor	1
529	77–8030	Tube – Breather	1
535	77–7950	Element – Filter Note: 77–9010 – Element Paper (Optional)	1
618	77–8140	Spring – Return	1
620	77–8000	Bracket – Carburetor	1
621	77–8010	Switch – Stop	1
†634	77–8150	Washer – Seal	2
955	77–8220	Screw – Hex Head	1
966	77–7940	Base Air Cleaner	1
968	77–7040	Cover – Air Cover	1
969	77–7920	Screw – Air Cleaner	1
971	77–7930	Screw – Air Cleaner	3
975	77–8190	Bowl Assy. – Carburetor	1
1011	77–8040	Tube – Vent	1
†1039	77–7250	Limiter – Float	1

*Included in Gasket Set
†Included in Carburetor Overhaul Kit

ENGINE GTS–150

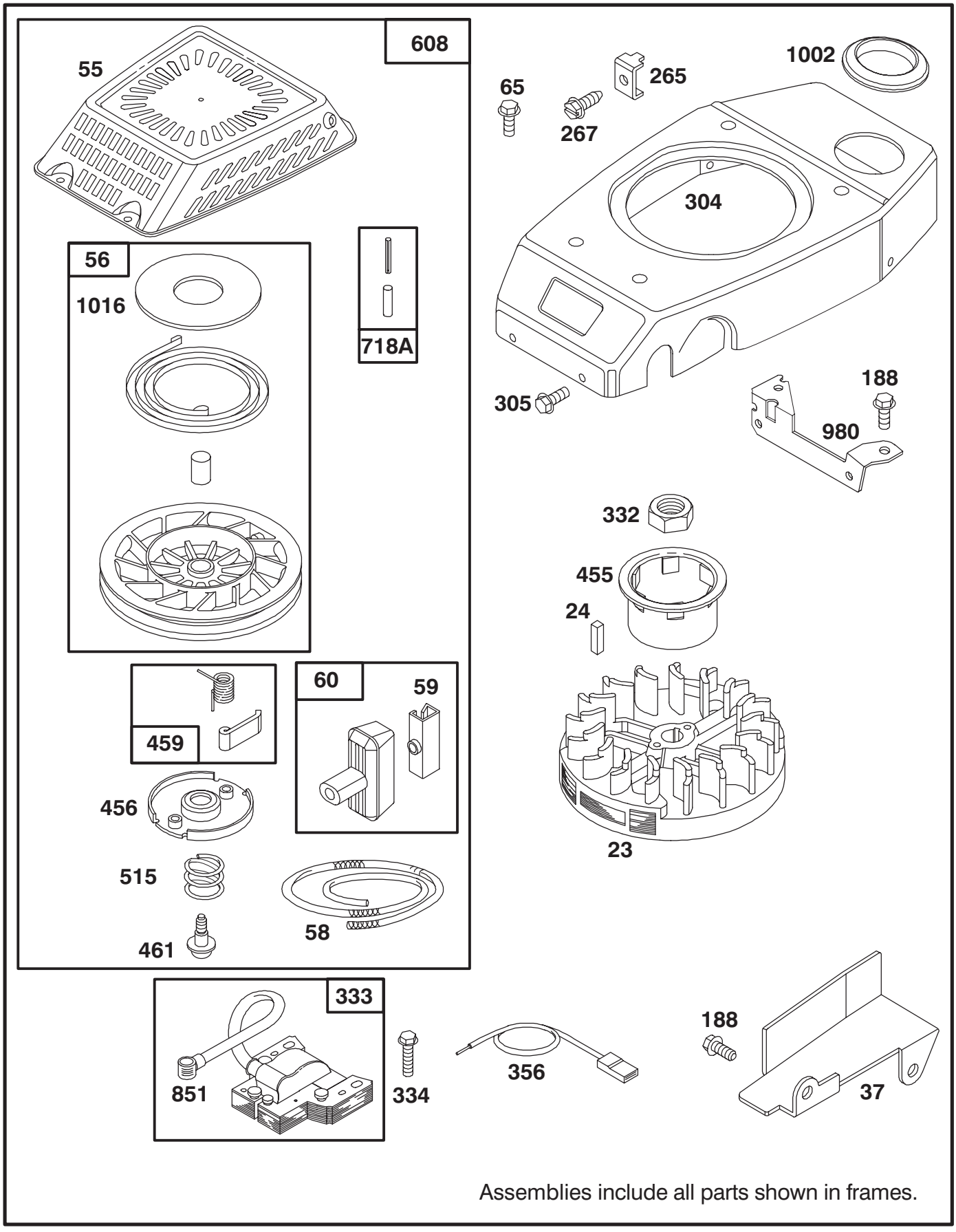

Assemblies include all parts shown in frames.

ENGINE GTS–150

Ref. No.	Part No.	Description	No. Used
23	77–8330	Flywheel – Magneto	1
24	77–8340	Key – Flywheel	1
37	77–7190	Guard – Flywheel	1
55	77–8460	Housing – Rewind Starter	1
56	77–9270	Pulley – Rewind Starter	1
58	77–8480	Spool – Starter Rope (Cut To Suit)	1
59	77–7210	Insert – Starter Grip	1
60	77–8510	Grip – Starter Rope	1
65	77–8300	Screw – Hex. Head	4
188	77–7450	Screw – Hex. Head (Blower bracket, Flywheel Guard)	4
265	77–8280	Clamp – Casing	1
267	77–8290	Screw – Hex Head	1
304	77–8270	Housing – Blower	1
305	77–8310	Screw – Hex. Head (blower housing)	4

Ref. No.	Part No.	Description	No. Used
332	77–8360	Nut – Hex	1
333	77–8420	Armature – Magneto	1
334	77–8440	Screw – Sem	2
356	77–8400	Wire – Ground	1
455	77–8350	Cup – Starter	1
456	77–8470	Retainer – Spring	1
459	77–8530	Pawl & Spring Ratchet	2
461	77–8490	Screw – Rewind Starter	1
515	77–8500	Spring – Retainer	1
608	77–8450	Starter Assy – Rewind	1
718A	77–8550	Dowel – Sleeve	1
851	77–8430	Terminal – Spark Plug	1
980	77–7140	Bracket – Blower Housing.	1
1002	77–7180	Grommet	1
1016	77–8570	Cover – Pulley	1

ENGINE GTS–150

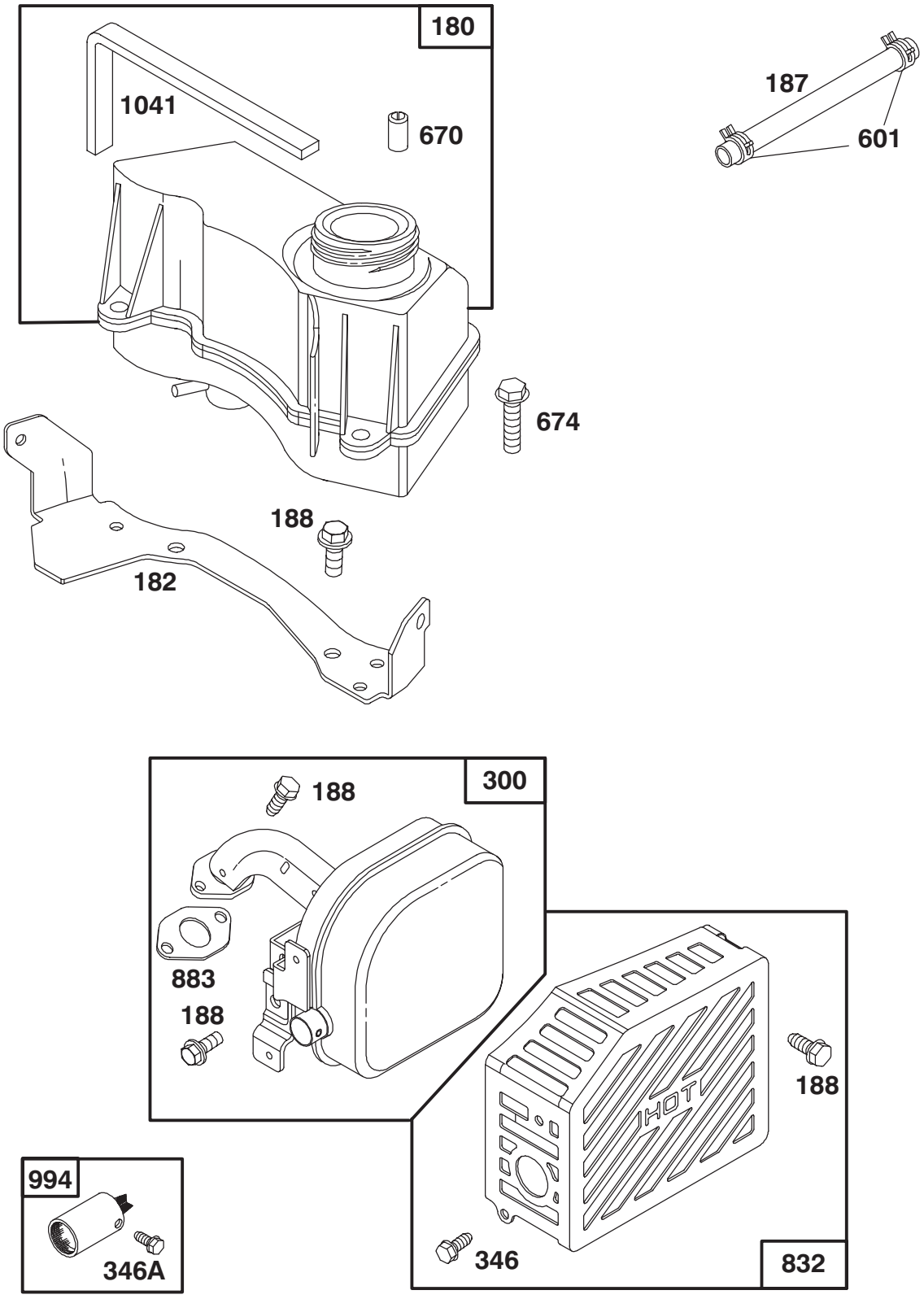

Assemblies include all parts shown in frames.

ENGINE GTS–150

Ref. No.	Part No.	Description	No. Used
180	77–8580	Tank Assy – Fuel	1
182	77–7170	Bracket – Fuel Tank	1
187	77–8620	Hose – Fuel (Cut To Suit)	1
188	77–7450	Screw – Hex. Head (muffler guard, muffler manifold to head connecting bracket, tk bracket)	7
300	77–8640	Muffler – Exhaust	1
346	77–8650	Screw – Self Tapping (muffler guard)	2
346A	77–9050	Screw – Arrester Mtg.	1
601	77–8630	Clamp – CL Pipe	2
670	77–9030	Spacer – Fuel Tank (Incl. 2)	1
674	77–8600	Screw – Tank Mtg.	2
832	77–9290	Guard – Muffler	1
*883	77–7760	Gasket – Exhaust	1
994	77–9040	Arrester – Spark	1
*1041	77–8590	Seal – Foam	1

*Included in Gasket Set

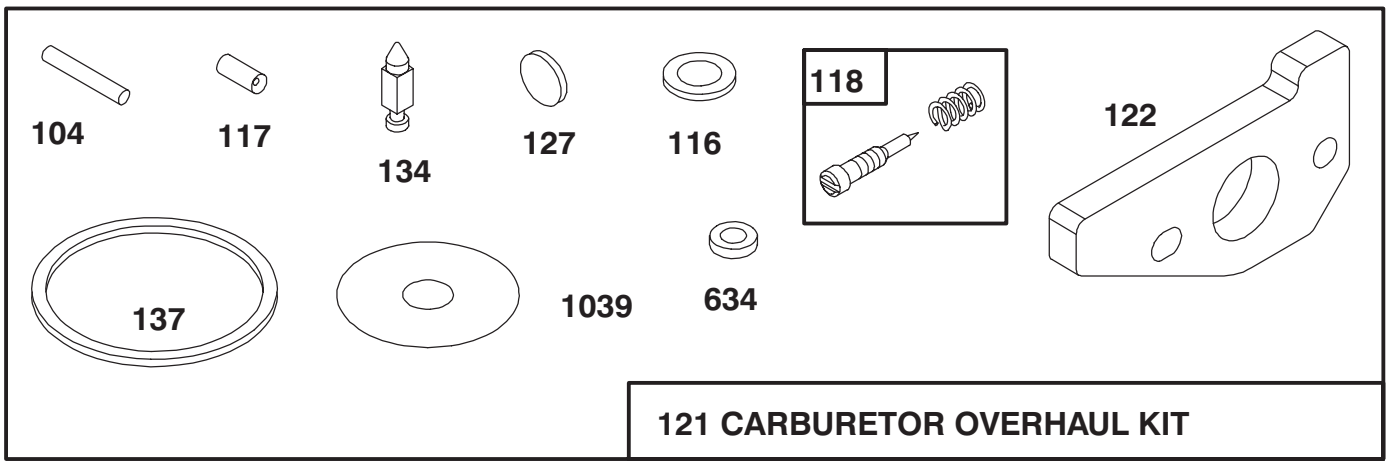

121 CARBURETOR OVERHAUL KIT

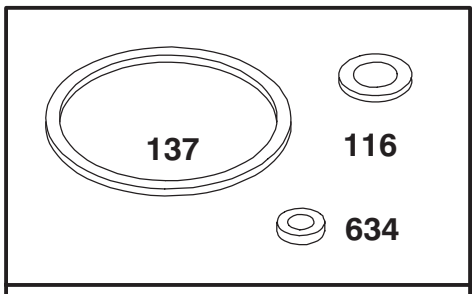

977 CARBURETOR GASKET SET

Assemblies include all parts shown in frames.

ENGINE GTS 150

Ref. No.	Part No.	Description	No. Used
104	77–8180	Pin – Float Hinge	1
116	77–8210	Washer – Fuel Bowl	1
117	77–8060	Jet – Needle Valve	1
118	77–8230	Valve & Kit – Needle	1
121	77–8920	Overhaul Kit – Carburetor	1
122	77–7820	Adapter Assy.	1
127	77–8100	Plug – Welch	1

Ref. No.	Part No.	Description	No. Used
134	77–8110	Valve – Float (Includes Seat)	1
137	77–8200	Gasket – Fuel Bowl	1
634	77–8150	Washer – Seal	2
977	77–8930	Gasket Set – Carburetor	1
1039	77–7250	Limiter – Float	1
*	77–9000	High Altitude Jet	1

*Not Illustrated

TORO PART NUMBER INDEX

Part No.	Description	Pg. No.	Ref. No.	Qty.
14–9949	Wheel & Tire Assembly	1	17	2
14–9959	Wheel Tire & Gear Assy.	4	31	2
16–1769	Housing – 53cm	1	4	1
16–8969	Control Panel Assembly	6	9	1
17–9425	Screw – Handle	7	11	1
17–9426	Screw – Handle	7	25	1
19–4050	Knob – Handle Release	6	10	2
25–7740	Knob – Arm	4	3	2
25–7740	Knob – Arm	1	25	2
27–6231	Bolt – Wheel	1	19	2
27–6231	Bolt – Wheel	4	33	2
27–6250	Bushing – Wheel	1	18	4
27–6250	Bushing – Wheel	4	32	4
29–9570	Bushing – Yoke	4	38	1
36–4780	Washer – Thrust	4	44	1
36–4791	Washer – Thrust	5	48	2
36–8070	V–Belt	4	13	1
38–7820	Bearing – Ball	5	60	1
40–1940	Washer – Wheel Bolt	1	20	4
42–3190	Screw – BBC	3	29	2
42–6890	Hub Assembly	3	39	1
46–5460	Housing – Control (L.H.)	7	10	1
46–5510	Spring – Torsion	7	7	1
46–5520	Lever – Traction	7	14	1
46–5530	Hook – Control	7	6	1
46–5540	Lever – Cable	7	18	1
46–5550	Bushing – Sleeve	7	8	1
46–5590	Spacer	7	13	1
46–5650	Idler Pulley Assembly	3	27	1
46–6431	Screw – Handle	7	12	1
46–7040	Screw – Hex. Hd. Cap	3	12	1
46–7040	Screw – Hex. Washer Hd.	7	1	3
48–2060	Bearing –Needle	4	21	2
49–2040	Screw – Self Tapping	4	8	8
52–3480	Dampner – Vibration	3	30	2
52–7410	Spring – Leaf	7	4	1
52–7430	Control Bar Assembly	7	3	1
54–9190	Nut – Lock	3	34	2
55–3760	Gear – Pinion 15T	5	49	1
55–3770	Gear – 49T (1st Gear)	5	58	1
55–3780	Gear – Pinion 20T	5	50	1
55–3790	Gear – 44T (2nd Gear)	5	57	1
55–3800	Gear – Pinion 25T	5	51	1
55–3810	Gear – 39T (3rd Gear)	5	56	1
57–6290	Pin – Insert	7	5	1
60–8710	Case – Gear (Upper)	5	61	1
60–8730	Cover – Gear Case	5	46	1
60–8750	Bushing – Intrmdt. Shaft	5	47	2
60–8770	Bushing – Output Shaft	5	45	1
60–8790	Sleeve – Gear	5	55	1
60–8800	Shaft – Intermediate	5	52	1
60–8810	Retainer – Shift Fork	4	39	1
60–8840	Pulley – Half	4	10	2
60–8850	Bushing – Output Shaft	5	53	1
60–8870	Yoke – Shift	4	37	1
60–8890	Pinion – Bevel	5	59	1
92–9077	Decal – Danger	1	5	1
62–3890	Drum – Brake	3	40	1
62–4280	Spacer – Blade	3	36	1
62–6660	Spacer	4	9	1
62–6673	Gear Case Assy. Complete	5	*	1
62–7560	Pulley – Engine	3	42	1
62–7700	Blade – 21	3	35	1
65–2720	Ring – Retaining	4	24	4
65–4710	Ring – Friction	4	25	2
65–4720	Spring – Compression	4	29	2
65–4730	Washer – Thrust (Inner)	4	22	2
65–4740	Washer – Thrust (Keyed)	4	23	4
65–4750	Pinion	4	28	2
65–4760	Washer –Clutch	4	26	2
65–4770	Shaft – Output	4	17	1
65–5042	Pivot Arm Assembly	4	2	2
65–5070	Hub – Brake Plate	3	21	1
65–5130	Hub – Idler Pulley	3	26	2
65–5190	Bracket – Belt Guide	4	7	1
65–5200	Cover – BBC	3	38	1
65–5210	Screw – Thread Forming	1	7	2
65–5220	Screw – Cap Socket Hd.	1	23	2
65–5220	Screw – Socket Hd. Cap	4	36	2
65–5250	Clip – Spring	4	43	1
65–5280	Retainer – Spring	3	1	1
65–5300	Flywheel – BBC	3	41	1
65–5320	Rod – Brake Spring	3	17	1
65–5330	Screen – BBC	3	31	1
65–5380	Washer	3	23	1
65–5440	Spring Arm Assembly	4	4	2
65–5660	Panel – Screen	1	2	1
65–5670	Bolt – Shoulder	3	18	1
65–5690	Bushing – Bellcrank	3	8	1
65–5700	Crank	3	3	1
65–5720	Bushing – BBC	3	13	1
65–5740	Belt – BBC	3	20	1
65–5780	Brake Plate Assembly	3	22	1
66–0020	Panel – Vertical	1	1	1
66–0030	Bracket – Cable Support	3	10	1
66–0090	Lever – Brake	3	14	1
66–0160	Housing – Control R.H.	7	2	1
66–0170	Washer – Nylon	7	19	1
66–0180	Rocker	7	15	1
66–0190	Spring – Detent	7	20	1
66–0330	Support – Spacer	7	24	1
66–0350	Bushing – Flange	3	15	1
66–0360	Cap – End	4	5	2
66–0540	Arm – Spring Front	1	22	2
66–0560	Screw – Shoulder	1	16	2
66–0570	Guide – Belt	2	7	1
66–0580	Arm – Pivot Front	1	27	2
66–6040	Key – Rocking (R.H.)	4	*	1
66–6050	Key – Rocking (L.H.)	4	27	1
70–9760	Bushing – Sleeve	4	19	2
71–3630	Spring – Compression	3	2	1
71–3640	Spring – Compression	3	16	1
71–3650	Link – Control	3	6	1
71–3660	Pin – BBC Spring	3	5	1
71–7900	Cap – Hinge Bolt L.H.	1	10	1
71–7910	Cap – Hinge Bolt R.H.	1	6	1
71–8090	Mount – Handle L.H.	6	12	1
71–8100	Mount – Handle R.H.	6	11	1
71–8580	Spacer – Door	1	12	2
71–9470	Door – Bag	8	3	1
71–9480	Handle – Door	8	2	1
71–9640	Ramp – Discharge	1	24	1
71–9650	Access – Cover	1	14	1
71–9680	Bag – Grass 53cm	8	5	1
71–9800	Door – Discharge	1	9	1
71–9840	Spring – Door	1	11	2
71–9870	Decal – Deck 53cm	1	26	1
71–9872	Decal – Panel	6	7	1
71–9920	Cover – Top	1	15	1
71–9930	Frame – Grass Bag	8	4	1
74–1660	Cover – Wheel	4	30	2
74–1671	Spacer – Wheel Cover	4	34	2
76–0760	Key – Shift	4	41	2
76–0770	Collar – Shift	4	42	1
76–0780	Sleeve – Shift Key	4	40	1
76–0920	Lever – Shift	4	16	1
76–2930	Retainer – Cable	4	15	1
77–7040	Cover – Air Cover	13	968	1

*Not Illustrated

TORO PART NUMBER INDEX (Cont.)

Part No.	Description	Pg. No.	Ref. No.	Qty.
77–7060	Cover – Valve	11	1023	1
77–7140	Bracket – Blower Housing.	15	980	1
77–7170	Bracket – Fuel Tank	17	182	1
77–7180	Grommet	15	1002	1
77–7190	Guard – Flywheel	15	37	1
77–7210	Insert – Starter Grip	15	59	1
77–7240	Bowl – Fuel	13	136	1
77–7250	Limiter – Float	13	1039	1
77–7250	Limiter – Float	18	1039	1
77–7260	Dipstick – Oil	11	523	1
77–7270	Seal – Intake Elbow	11	*524	1
77–7270	Seal – Intake Elbow	9	524	1
77–7290	Tube – Oil Filler	11	525	1
77–7300	Seal – O Ring	9	842	1
77–7300	Seal – O Ring	11	*842	1
77–7320	Gasket – Rocker Cover	11	*1022	1
77–7320	Gasket – Rocker Cover	9	1022	1
77–7330	Plug – Spark	11	337	1
77–7340	Elbow – Spark Plug	11	635	1
77–7350	Tube – Breather	11	11	1
77–7360	Screw – Hex. Head	11	10	4
77–7370	Lever.– Governor	11	227	1
77–7380	Bolt – Governor Lever	11	562	1
77–7390	Nut – Hex.	11	592	1
77–7400	Baffle – Cylinder	11	572	1
77–7410	Gasket – Breather	11	*9A	1
77–7410	Gasket – Breather	9	9A	1
77–7420	Screw – Sem	11	307	4
77–7450	Screw – Hex. Head	13	188	2
77–7450	Screw – Hex. Head	15	188	4
77–7450	Screw – Hex. Head	17	188	7
77–7450	Screw – Sem	11	188	5
77–7460	Crank – Governor	11	616	1
77–7470	Washer – Thrust	11	230	1
77–7480	Fastener	11	615	1
77–7490	Gear – Cam	11	46	1
77–7500	Gear – Governor	11	219	1
77–7510	Crankshaft	11	16	1
77–7530	Gear – Timing	11	741	1
77–7550	Gasket – Engine Base	11	*12	1
77–7550	Gasket – Engine Base	9	12	1
77–7560	Base – Engine	11	18	1
77–7570	Seal – Oil	11	*20	1
77–7570	Seal – Oil	9	20	1
77–7590	Cylinder Assy.	11	1	1
77–7600	Dowel – Sleeve	11	718	2
77–7610	Tappet – Valve	11	45	2
77–7620	Rod – Push	11	1026	2
77–7630	Screw – Cylinder Head	11	13	4
77–7640	Pump – Oil	11	1024	1
77–7650	Cover – Oil Pump	11	979	1
77–7660	Seal – O Ring	9	116A	1
77–7660	Seal – O Ring	11	*116A	1
77–7670	Rod – Connecting	11	29	1
77–7680	Screw – Connecting Rod	11	32	2
77–7690	Piston Assy. (Std.)	11	25	1
77–7700	Ring Set (Std.)	11	26	1
77–7710	Lock – Piston Pin	11	27	2
77–7720	Pin – Piston (Std)	11	28	1
77–7730	Head – Cylinder	11	5	1
77–7740	Gasket – Cylinder Head	11	*7	1
77–7740	Gasket – Cylinder Head	9	7	1
77–7760	Gasket – Exhaust	11	*883	1
77–7760	Gasket – Exhaust	17	*883	1
77–7760	Gasket – Exhaust	9	883	1
77–7770	Guide – Push Rod	11	1034	1
77–7780	Stud – Rocker Arm	11	166	2
77–7790	Arm – VLV Rocker	11	1029	2
77–7800	Cap – Valve	11	238	2
77–7810	Spring – Valve	11	35	2
77–7820	Adapter Assy.	11	122	1
77–7820	Adapter Assy.	13	122	1
77–7820	Adapter Assy.	18	122	1
77–7860	Valve – Exhaust	11	33	1
77–7870	Retainer – Spring	11	40	2
77–7880	Valve – Intake	11	34	1
77–7890	Seal Assy – Valve	9	868	1
77–7890	Seal Assy. – Valve	11	*868	1
77–7900	Gasket – Valve	11	*868A	1
77–7900	Gasket – Valve	9	868A	1
77–7910	Nut – Hex Special	11	192	2
77–7920	Screw – Air Cleaner	13	969	1
77–7930	Screw – Air Cleaner	13	971	3
77–7940	Base Air Cleaner	13	966	1
77–7950	Element – Filter	13	535	1
77–7960	Gasket – Air Cleaner	13	*163	1
77–7960	Gasket – Air Cleaner	9	163	1
77–7970	Screw – Hex Head	13	124	2
77–7980	Link – Governor	13	201	1
77–7990	Spring – Governor	13	209	1
77–8000	Bracket – Carburetor	13	620	1
77–8010	Switch – Stop	13	621	1
77–8020	Screw Assy – Speed Adj.	13	98A	1
77–8030	Tube – Breather	13	529	1
77–8040	Tube – Vent	13	1011	1
77–8050	Carburetor Assy	13	125	1
77–8060	Jet – Needle Valve	13	117	1
77–8060	Jet – Needle Valve	18	117	1
77–8070	Valve – Choke	13	108	1
77–8080	Valve – Throttle	13	130	1
77–8090	Screw – Round Head	13	95	1
77–8100	Plug – Welch	13	127	1
77–8100	Plug – Welch	18	127	1
77–8110	Valve – Float	13	134	1
77–8110	Valve – Float	18	134	1
77–8120	Adapter – Jet	13	147	1
77–8130	Shaft – Choke	13	141	1
77–8140	Spring – Return	13	618	1
77–8150	Washer – Seal	13	634	2
77–8150	Washer – Seal	18	634	2
77–8160	Shaft – Throttle	13	131	1
77–8170	Float – Carburetor	13	133	1
77–8180	Pin – Float Hinge	13	104	1
77–8180	Pin – Float Hinge	18	104	1
77–8190	Bowl Assy. – Carburetor	13	975	1
77–8200	Gasket – Fuel Bowl	13	137	1
77–8200	Gasket – Fuel Bowl	18	137	1
77–8210	Washer – Fuel Bowl	13	116	1
77–8210	Washer – Fuel Bowl	18	116	1
77–8220	Screw – Hex Head	13	955	1
77–8230	Valve & Kit – Needle	13	118	1
77–8230	Valve & Kit – Needle	18	118	1
77–8240	Screw – Idle Adj.	13	98	1
77–8270	Housing – Blower	15	304	1
77–8280	Clamp – Casing	15	265	1
77–8290	Screw – Hex Head	15	267	1
77–8300	Screw – Hex. Head	15	65	4
77–8310	Screw – Hex. Head	11	305	2
77–8310	Screw – Hex. Head	15	305	4
77–8330	Flywheel – Magneto	15	23	1
77–8340	Key – Flywheel	15	24	1
77–8350	Cup – Starter	15	455	1
77–8360	Nut – Hex	15	332	1
77–8400	Wire – Ground	15	356	1
77–8420	Armature – Magneto	15	333	1
77–8430	Terminal – Spark Plug	15	851	1
77–8440	Screw – Sem	15	334	2
77–8450	Starter Assy – Rewind	15	608	1

*Not Illustrated

TORO PART NUMBER INDEX (Cont.)

Part No.	Description	Pg. No.	Ref. No.	Qty.
77—8460	Housing — Rewind Starter	15	55	1
77—8470	Retainer — Spring	15	456	1
77—8480	Spool — Starter Rope	15	58	1
77—8490	Screw — Rewind Starter	15	461	1
77—8500	Spring — Retainer	15	515	1
77—8510	Grip — Starter Rope	15	60	1
77—8530	Pawl & Spring Ratchet	15	459	2
77—8550	Dowel — Sleeve	15	718A	1
77—8570	Cover — Pulley	15	1016	1
77—8580	Tank Assy — Fuel	17	180	1
77—8590	Seal — Foam	17	*1041	1
77—8590	Seal — Foam	9	1041	1
77—8600	Screw — Tank Mtg.	17	674	2
77—8620	Hose — Fuel	17	187	1
77—8630	Clamp — CL Pipe	17	601	2
77—8640	Muffler — Exhaust	17	300	1
77—8650	Screw — Self Tapping	17	346	2
77—8900	Gasket Set	9	358	1
77—8920	Overhaul Kit — Carburetor	18	121	1
77—8930	Gasket Set — Carburetor	18	977	1
77—8981	Engine — OHV	2	1	1
77—9000	High Altitude Jet	18	*	1
77—9030	Spacer — Fuel Tank	17	670	1
77—9040	Arrester — Spark	17	994	1
77—9050	Screw — Arrester Mtg.	17	346A	1
77—9060	Seal — Oil	11	*3	1
77—9060	Seal — Oil	9	3	1
77—9070	Screw — Engine Base	11	22	7
77—9090	Screw — Set	11	192A	2
77—9240	Plug — Oil Drain	11	15	1
77—9250	Gasket — Valve Cover	9	9	1
77—9250	Gasket — Valve Cover	11	*9	1
77—9260	Breather — Valve	11	8	1
77—9270	Pulley — Rewind Starter	15	56	1
77—9280	Short Block	11	*	1
77—9290	Guard — Muffler	17	832	1
80—2770	Cup — Anti Scalp	3	32	1
86—7990	Screw — Clamp	2	9	1
92—2289	Plate — TORO Logo	2	2	1
92—9665	Screw — Self Tapping	6	8	4
93—4105	Decal — Bag Door	1	5	1
93—4355	Decal — Recoil	2	3	1
93—6629	Cable — Clutch	7	17	1
93—6630	Control — Throttle	6	4	1
93—6632	Control — Ground Speed	6	1	1
93—6633	Cable — Traction	7	16	1
93—6637	Handle	6	5	1
93—6656	Decal — Instruction	6	3	1
93—7198	Gas Cap Assembly	2	4	1
2210—249	Clamp — Casing	2	8	1
237—153	Seal — ORing	4	18	2
253—151	Seal — V—Ring	3	28	1
302—56	Fitting — Grease	4	20	2
321—13	Screw — Hex. Hd. Cap	3	25	2
322—21	Screw — Hex. Hd. Cap	3	4	1
322—29	Screw — Hex Hd. Cap	1	8	2
3256—23	Washer — Flat	3	7	2
3256—24	Washer — Flat	4	12	1
3257—17	Key — Woodruff	3	43	1
3272—5	Pin — Cotter	4	14	1
3290—378	Tie — Cable	6	6	5
3296—5	Nut — Lock	4	11	1
3296—6	Nut — Lock	1	21	4
3296—6	Nut — Lock	4	35	2
3296—8	Nut — Lock	7	21	1
3296—33	Nut — Lock	3	37	1
3296—42	Nut — Lock	3	19	2
3296—58	Nut — Lock	7	23	2
32121—9	Pin — Coil	7	9	1
32121—120	Pin — Coil	5	54	1
32128—44	Nut — Lock	3	9	1
32144—70	Screw — Cap Hex. Hd.	1	3	6
32144—70	Screw — Hex. Hd. Cap	2	5	2
32144—70	Screw — Hex. Hd. Cap	3	11	5
32144—70	Screw — Hex. Washer Hd.	4	1	5
32144—102	Screw — Hex. Hd. Cap	2	6	3
32144—105	Screw — Hex. Hd. Cap	3	24	1
32144—111	Screw — Index Hex Washer	8	1	5

OPTIONAL EQUIPMENT

Leaf Shredder Kit . . . . . Model No. 59180
Dethatcher Kit . . . . . Model No. 59131
Spark Arrestor Kit . . . . . Part No. 77—9040

*Not Illustrated

PRODUCT CHANGES

In an effort to make improvements available to TORO owners as quickly as possible, minor changes are incorporated into Toro's products from time to time that do not become immediately shown in the Parts Catalog. If such a change has been made in your unit, which is not reflected in your manual, see your TORO Distributor or his Authorized TORO Service Dealer for information and part numbers.

COUNTRIES OTHER THAN THE UNITED STATES OR CANADA

Customers who have purchased TORO products exported from the United States or Canada should contact their Toro Distributor (Dealer) to obtain guarantee policies for your country, province or state. If for any reason you are dissatisfied with your Distributor's service or have difficulty obtaining guarantee information, contact the TORO importer. If all other remedies fail, you may contact us at The Toro Company.

MAINTENANCE RECORD

Date								

Compliance with Radio Interference Regulations Certified.
Certifie Conforme au Reglement sur le Brouillage Radioelectrique.

Litho in U.S.A.

MAINTENANCE RECORD

Date								

MAINTENANCE RECORD

Date								