FORM NO. 3317–377A

TORO®

MODEL NO. 73501 5900412 & UP	PARTS CATALOG

WHEEL HORSE®
520–H GARDEN TRACTOR

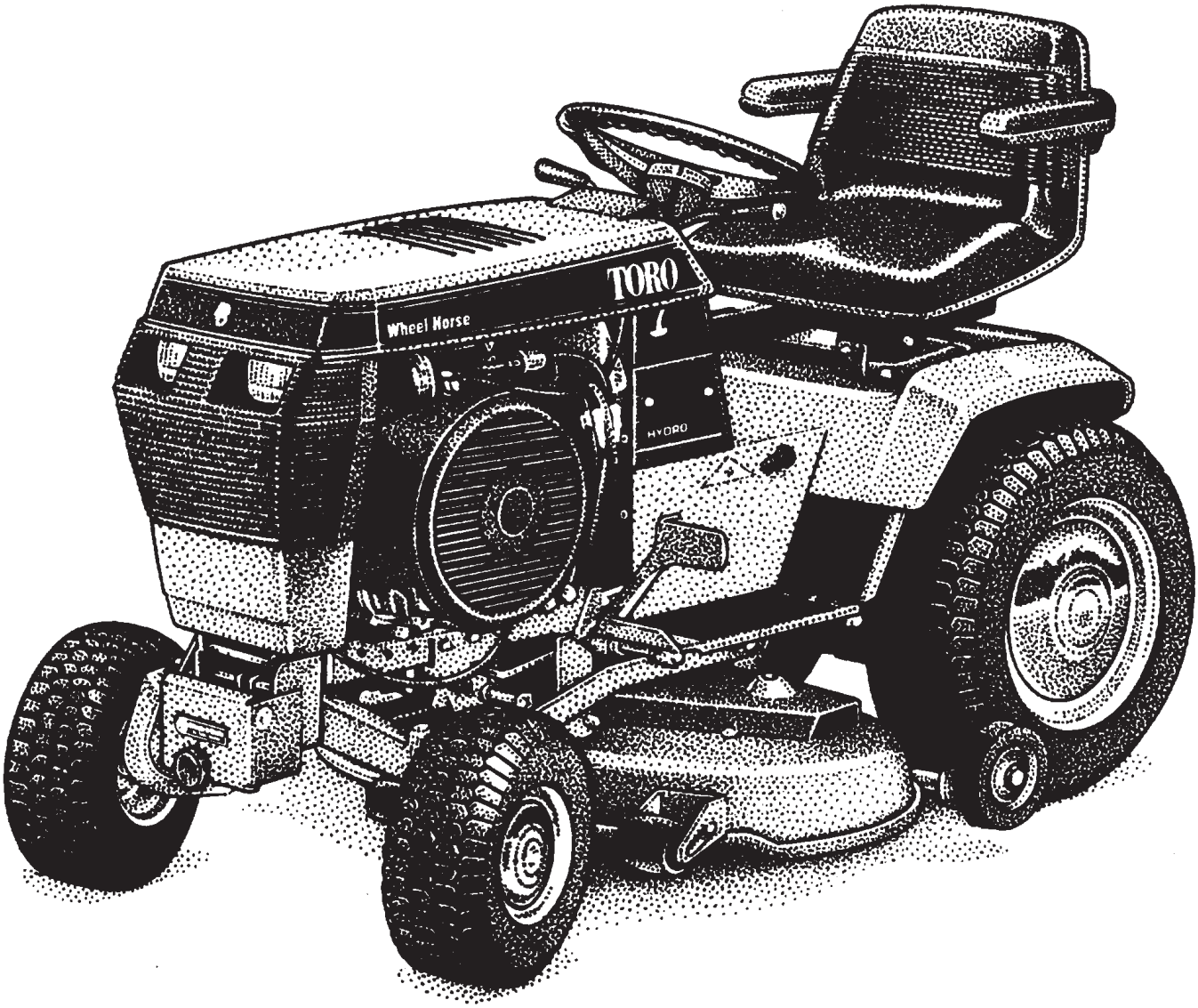

© The TORO Company –1994
All Rights Reserved

TPS

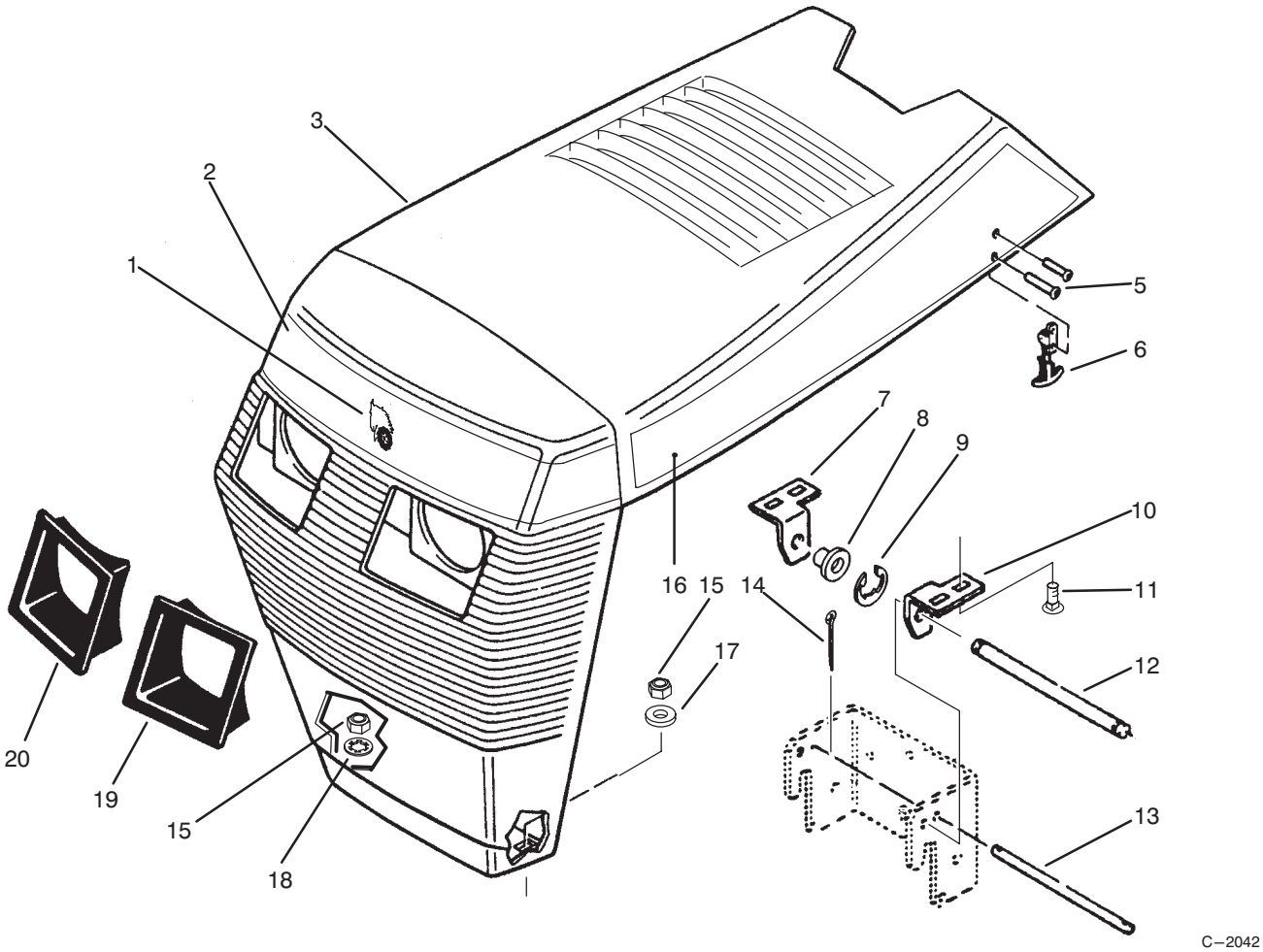

HOOD ASSEMBLY

Ref. No.	Part No.	Description	No. Used
1	92–9836	Plate – Logo	1
2	92–9826	Decal – Front	1
3	114709	Hood	1
5	117432	Rivet – Pop	4
6	117344	Latch – Hood	2
7	116746	Bracket – RH	1
8	5979	Bushing	2
9	105797	Ring – Retaining	2
10	116747	Bracket – LH	1
11	3229–25	Bolt – Carriage	4

Ref. No.	Part No.	Description	No. Used
12	116745	Rod – Pivot	1
13	101850	Rod – Hood Stop	1
14	3272–1	Pin – Cotter	2
15	3296–42	Nut – Lock	4
16	92–9834	Decal – Hood LH	1
*	92–9835	Decal – Hood RH	1
17	3256–22	Washer	3
18	3254–2	Washer – Internal Tooth	1
19	109495	Bezel – Headlight LH	1
20	109494	Bezel – Headlight RH	1

*Not Illustrated

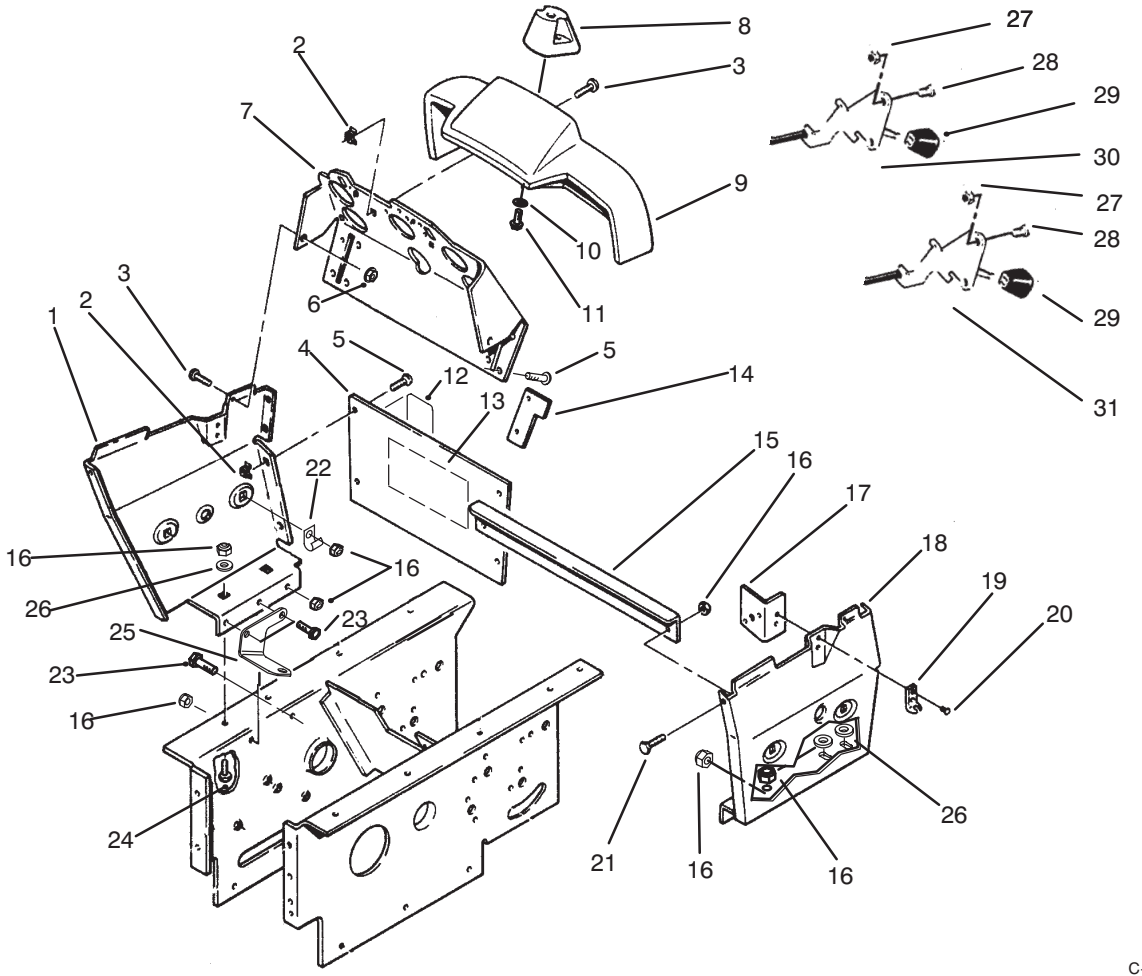

C–2043

DASH AND SIDE PANELS ASSEMBLY

Ref. No.	Part No.	Description	No. Used
1	113962	Panel – RH	1
2	32115–5	Nut – Speed	12
3	910839	Screw	6
4	92–7295	Plate – Hoodstand, Rear (Incl. Ref. #13)	1
5	910837	Screw – Black	8
6	32128–33	Nut – Lock, Flange Hd.	2
7	117267	Panel – Dash	1
8	118410	Cover – Steering	1
9	115620	Cover – Console, 5–Gage	1
10	92–0270	Washer	4
11	118780	Screw – Plastite	4
12	111960	Decal – PTO Clutch	1
13	92–9838	Decal – Danger	1
14	114641	Stop – Choke	1
15	113932	Stiffener – Panel	1

Ref. No.	Part No.	Description	No. Used
16	3296–29	Nut – Lock	11
17	114628	Bracket – Switch	1
18	79–4890	Panel – LH	1
19	117343	Keeper – Latch	2
20	117433	Rivet – RS Pop	4
21	322–1	Screw – Cap Hex. Hd.	2
22	8830	”J”Clip	1
23	322–3	Screw – Cap Hex. Hd.	3
24	900036	Bolt	2
25	78–1540	Bracket – Control, Lower	1
26	3256–23	Washer – Flat	4
27	9157404	Nut – Lock	4
28	9107922	Screw	4
29	66–0120	Knob – Throttle Control	2
30	115392	Control – Throttle	1
31	114027	Control – Choke	1

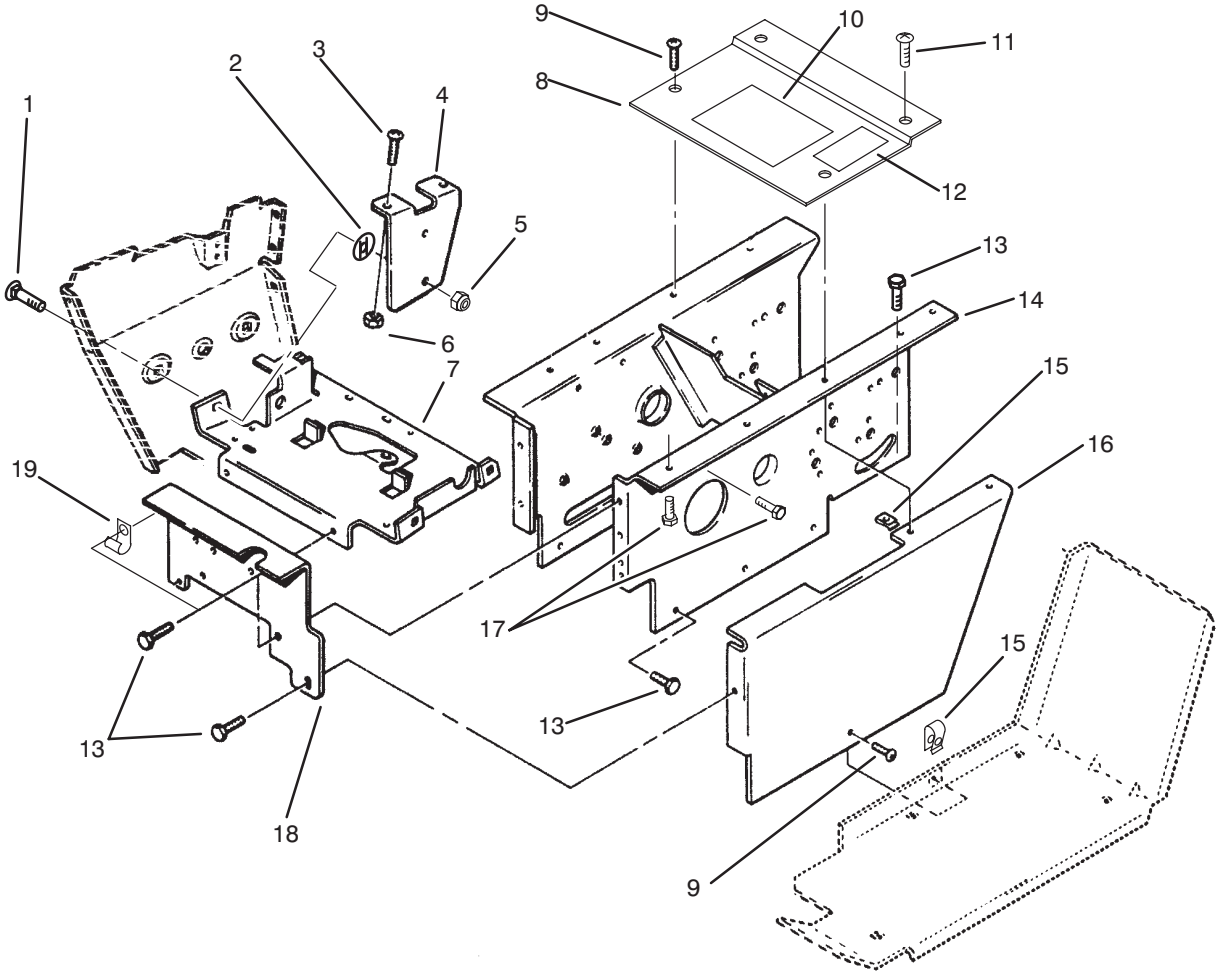

HOODSTAND ASSEMBLY

Ref. No.	Part No.	Description	No. Used
1	116000	Bolt – Carriage	4
2	108457	Nut – Push On	1
3	321–3	Screw – Cap Hex. Hd.	2
4	117191	Bracket – Holder, Fuse	1
5	3296–29	Nut – Lock	1
6	915740	Nut	2
7	116309	Bracket – Support, Battery	1
8	92–7293	Plate – Hoodstand, Top (Incl. Ref. #10)	1
9	910837	Screw – Black	3

Ref. No.	Part No.	Description	No. Used
10	92–8946	Decal – Danger	1
11	910839	Screw	2
12	116445	Decal – Brake, Parking	1
13	926694	Screw – Cap Hex. Hd.	14
14	79–5120	Hoodstand	1
15	107069	Nut – Speed	5
16	79–5130	Cover – Side, LH	1
17	322–3	Screw – Cap Hex. Hd.	5
18	79–4020	Plate – Front	1
19	8830	”J”Clip	1

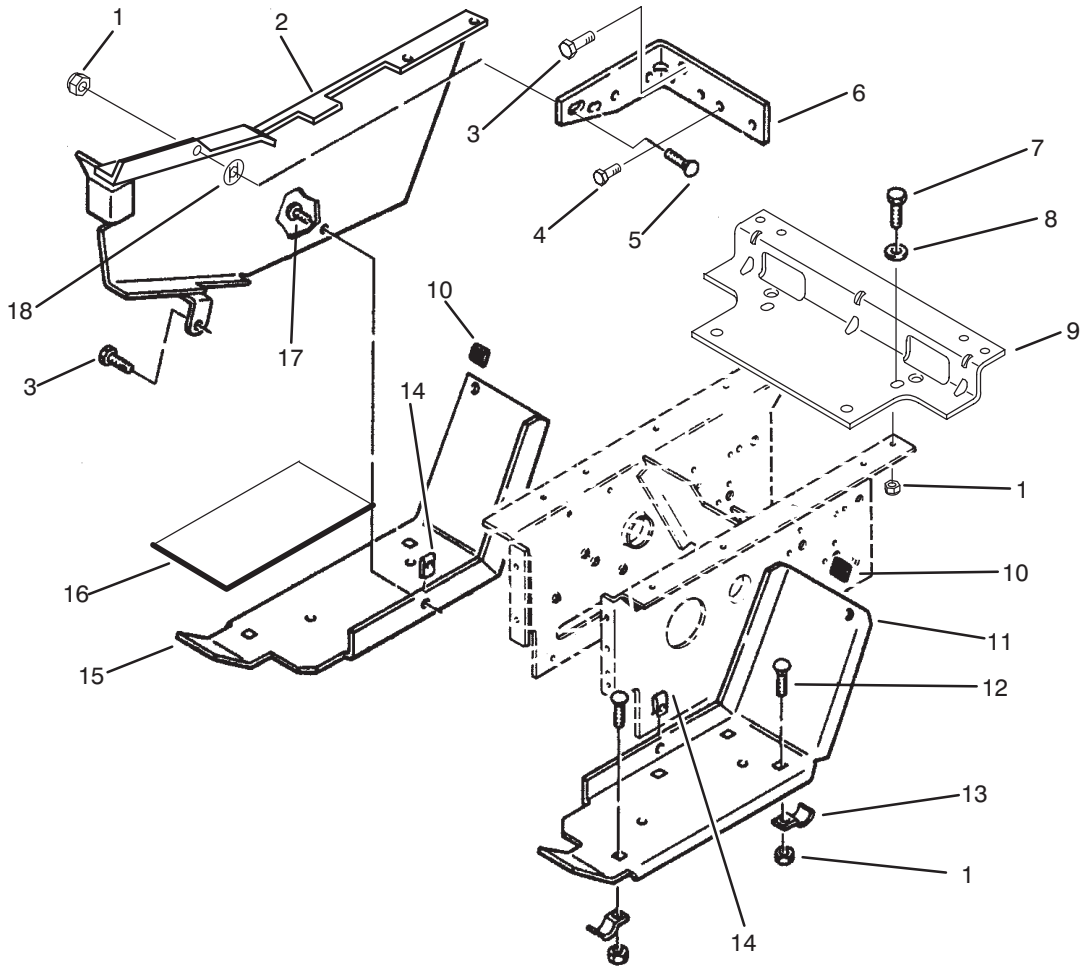

BELT GUARD AND FOOTREST ASSEMBLY

Ref. No.	Part No.	Description	No. Used
1	3296–29	Nut – Lock	8
2	92–1527	Guard – Belt	1
3	926694	Bolt	2
4	926671	Screw – Cap Hex. Hd.	1
5	3230–1	Bolt – Carriage	1
6	109554	Bracket – Support, Guard	1
7	322–5	Screw – Cap Hex. Hd.	2
8	3256–23	Washer – Flat	2
9	113023	Bracket – Fender	1
10	518211	Bumper	2

Ref. No.	Part No.	Description	No. Used
11	106223	Footrest – LH	1
12	116000	Bolt – Carriage	4
13	7456	Bracket	4
14	107069	Clip	2
15	106222	Footrest – RH	1
16	110635	Pad – Footrest L.H.	1
*	110634	Pad – Footrest R.H.	1
17	910837	Screw	1
18	108457	Nut – Push On	1

*Not Illustrated

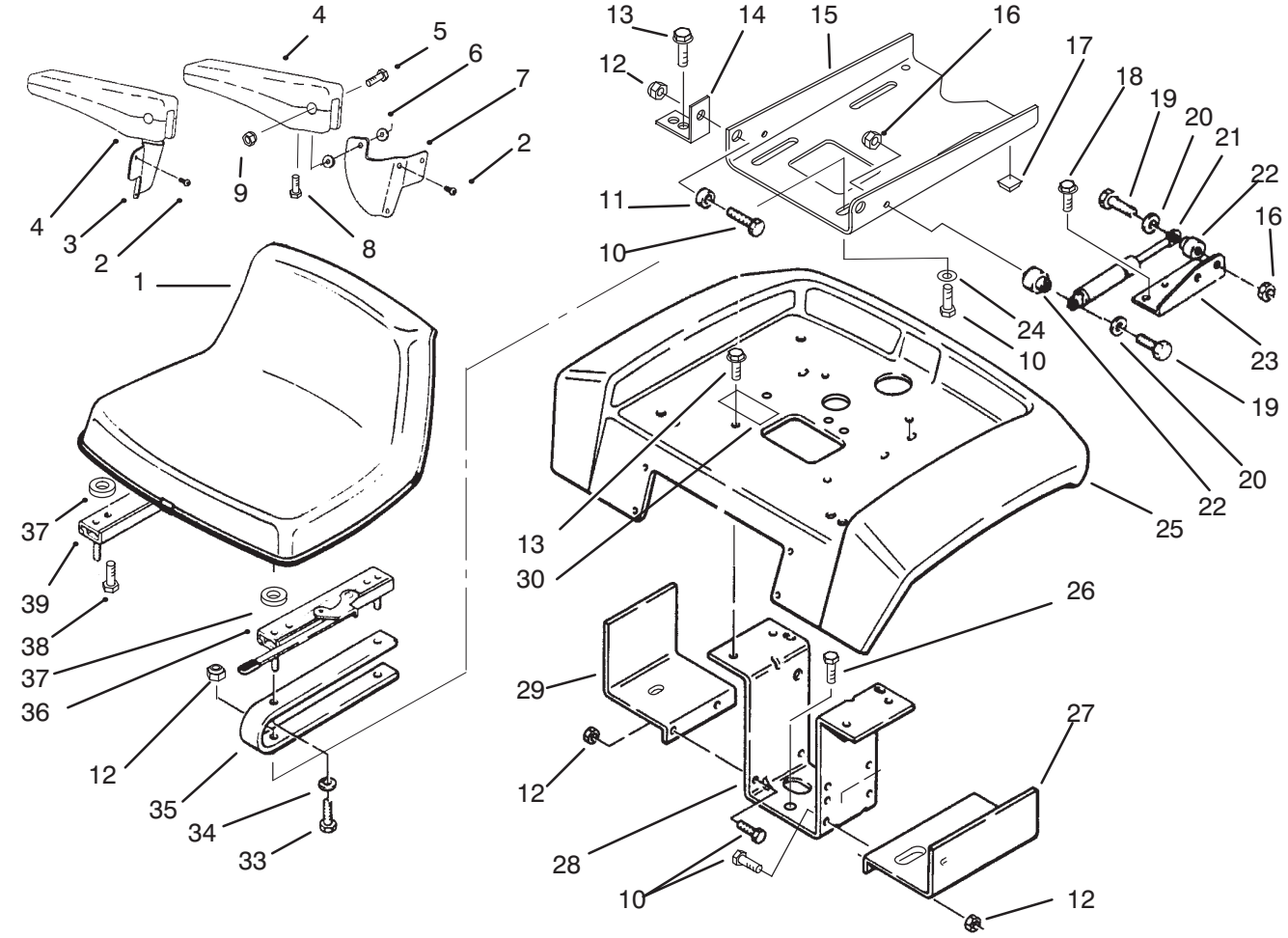

SEAT, FENDER AND FENDER SUPPORTS

Ref. No.	Part No.	Description	No. Used
1	88−3220	Seat	1
2	92−0992	Screw	6
3	92−0987	Bracket − Arm R.H.	1
4	92−0988	Rest − Arm	2
5	92−0989	Screw	2
6	92−0993	Spacer − Nylon	4
7	92−0986	Bracket − Arm L.H.	1
8	92−0990	Screw	2
9	92−0991	Nut − Acorn Lock	2
10	322−4	Bolt	2
11	105503	Bushing	2
12	3296−29	Nut − Lock	2
13	9266944	Screw − Hex. Hd.	4
14	105524	Bracket − Pivot	2
15	78−2990	Plate − Seat Pivot	1
16	3296−42	Nut − Lock	2
17	111071	Bumper	2
18	9266944	Bolt − Flange	2
19	321−8	Bolt	2
20	3256−22	Washer	2

Ref. No.	Part No.	Description	No. Used
21	114343	Spring − Gas	1
22	114344	Spacer	2
23	114345	Bracket − Gas Spring	1
24	3256−23	Washer	4
25	110960	Fender	1
26	322−3	Screw − Cap Hex. Hd.	4
27	108464	Support − LH, Fuel Tank	1
28	79−4990	Bracket − Support, Fender	1
29	106236	Support − RH, Fuel Tank	1
30	116446	Decal − Do Not Tow	1
33	322−5	Screw − Cap Hex. Hd.	4
34	3253−4	Washer − Lock	4
35	114263	Spring − Seat	2
36	114264	Adjuster − LH (With Latch)	1
37	109989	Spacer − Nylon	4
38	9108652	Screw	4
39	114265	Slide − RH	1
*	88−3230	Kit − Armrest (Incl. Ref. # 2−9)	1

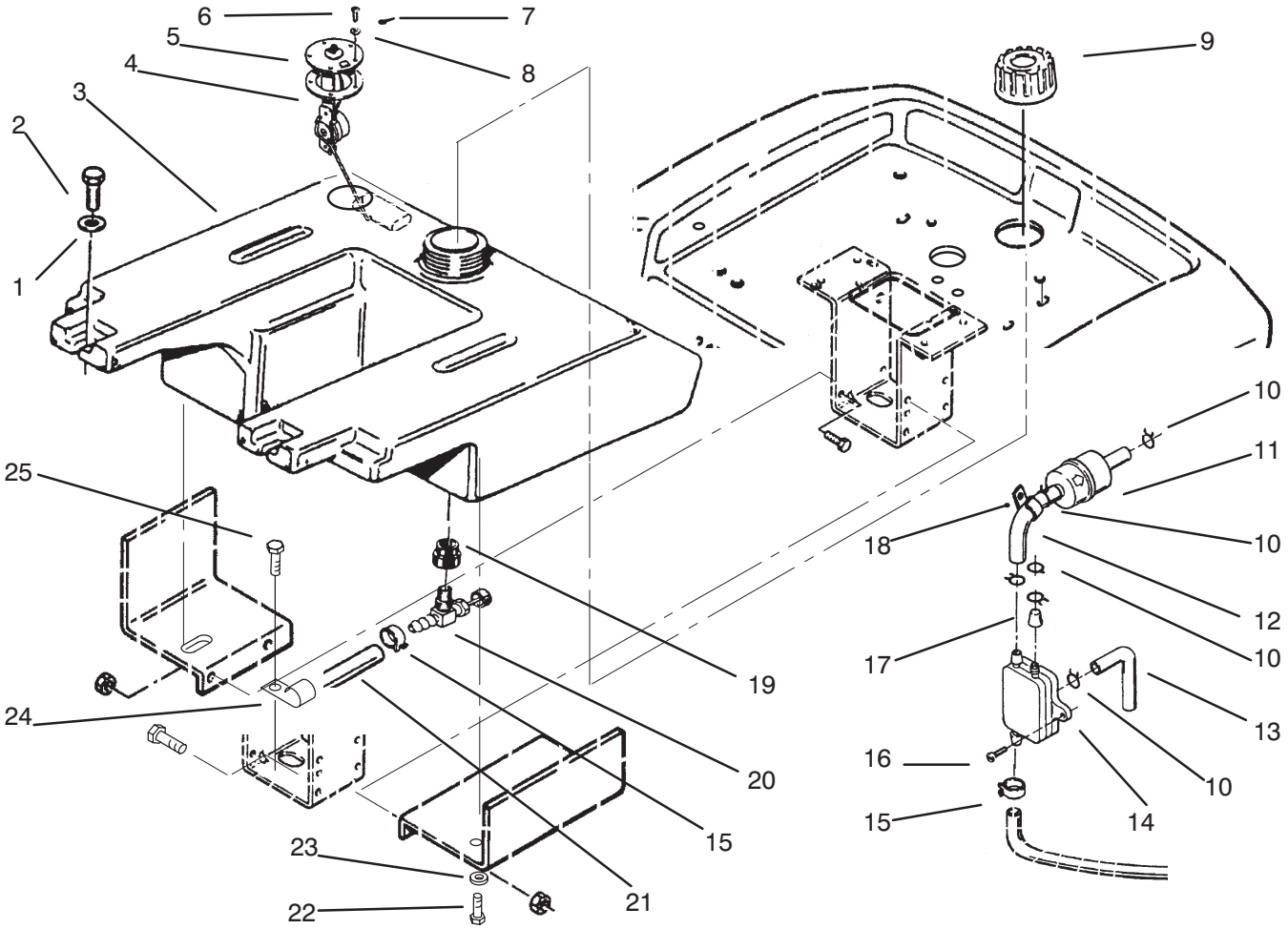

FUEL TANK AND FUEL PUMP

Ref. No.	Part No.	Description	No. Used
1	3256–4	Washer	2
2	926794	Bolt	2
3	114012	Tank – Fuel (Incl. Ref.# 19 & 20)	1
4	113372	Gasket	1
5	113358	Sender – Fuel Level	1
6	910807	Screw	5
7	79–3180	Terminal – Ground	1
8	3253–17	Washer – Lock	5
9	55–3570	Cap – Fuel	1
10	82–1080	Clamp – Hose	6
11	NN10506	Filter – Fuel	1
12	NN10790	Line – Fuel 12”	1

Ref. No.	Part No.	Description	No. Used
13	NN10302	Line – Fuel 7”	
14	NN10212	Pump – Fuel	1
15	108898	Clamp – Corbin	2
16	59–1050	Screw – ST Pan Hd	2
17	NN10211	Cap – Fuel Fitting	1
18	105490	Clamp	1
19	104047	Bushing – Rubber	1
20	104048	Valve – Fuel Shut–Off	1
21	110521	Line – Fuel 53”	1
22	322–2	Bolt	3
23	3253–4	Washer – Lock	2
24	NN10348	Clip – Wire	1
25	3235–22	Screw – Hex. Hd., Nylon	1

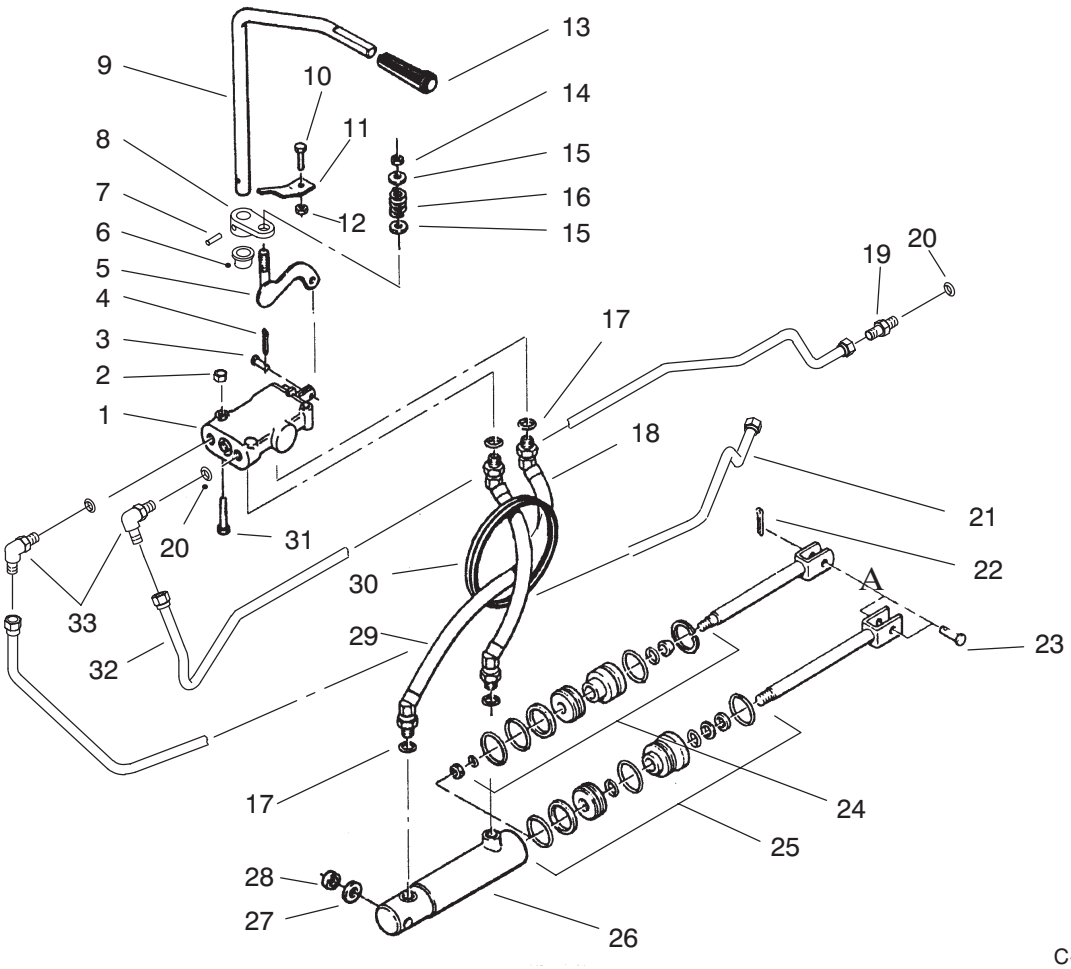

C–2051

HYDRAULIC CONTROL SYSTEM

Ref. No.	Part No.	Description	No. Used
1	114000	Valve – Hydraulic (Incl. Ref.#3–4)	1
2	3296–42	Nut	2
3	9321204	Pin – Clevis	1
4	3272–1	Pin – Cotter	2
5	78–5640	Bar – Lift	1
6	5983	Bushing	1
7	933198	Pin – Spirol	1
8	116302	Arm – Control	1
9	117328	Rod – Lift Control	1
10	321–4	Screw	1
11	116305	Bracket – Control Rod	1
12	3296–42	Nut	1
13	116634	Knob – Hydraulic Lift	1
14	3296–29	Nut	1
15	3256–23	Washer – Flat	2
16	104841	Spring	1
17	973310	”O”Ring	4
18	110125	Hose – Valve To Cylinder	1
19	102628	Fitting – Straight Adapter (Incl. Ref. #20)	1

Ref. No.	Part No.	Description	No. Used
20	973370	”O”Ring	4
21	86–9280	Tube – Hydraulic (Pressure)	1
22	3272–11	Pin – Cotter	1
23	9329974	Pin – Clevis	1
24	101699	Kit – Service, Cylinder Repair	1
25	109088	Kit – Service, Cylinder Repair	1
26	119340	Cylinder – Hydraulic (Incl. Ref.#24–25)	1
27	9202324	Washer	1
28	101757	Spacer	1
29	110124	Hose – Valve To Cylinder	1
30	106267	Grommet – Rubber	1
31	321–11	Bolt	2
32	86–9290	Tube – Hydraulic (Return)	1
33	108365	Fitting – 90˚ (Incl. Ref. #20)	2
*	109081	Kit – Service, Valve Repair	1
*	100571	Tie – Cable	1

*Not Illustrated

Note : In Illustration Center lines A Continue on next page

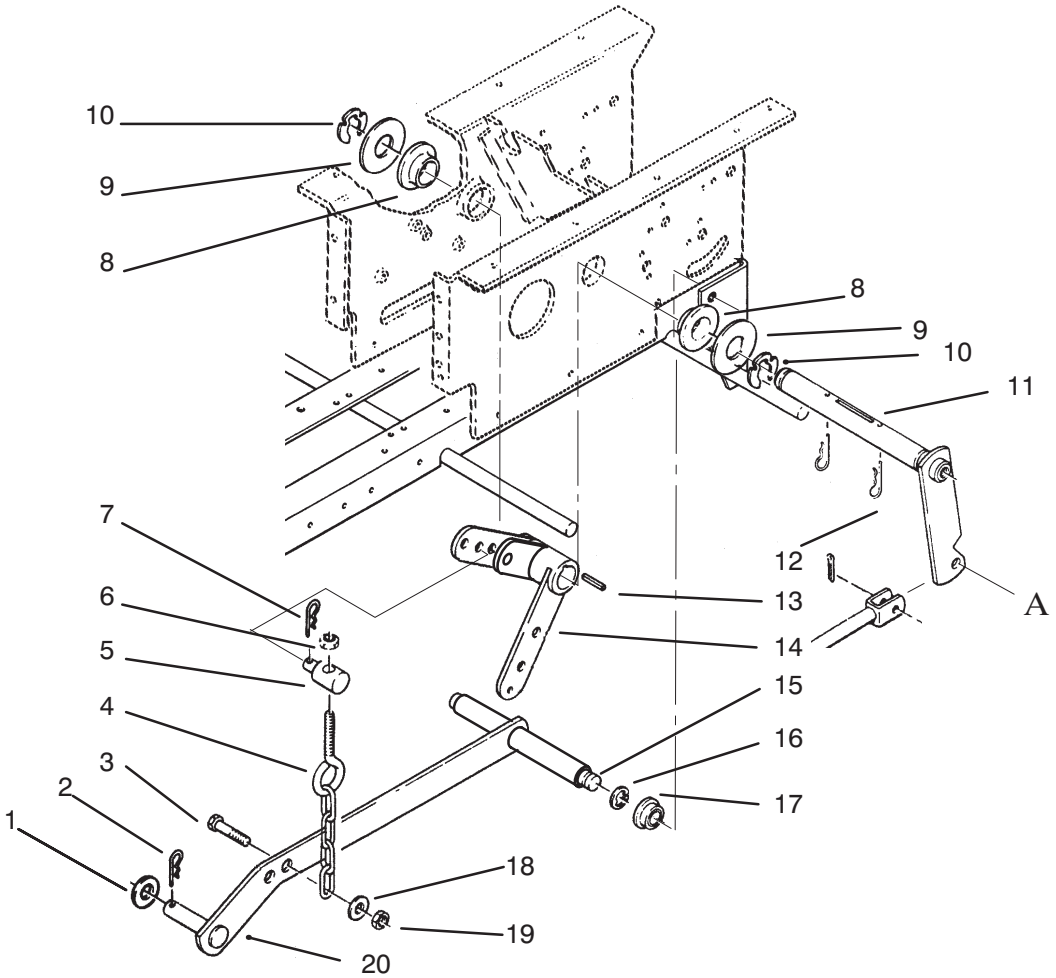

HYDROSTATIC LIFT LINKAGE

Ref. No.	Part No.	Description	No. Used
1	3256–26	Washer	1
2	9335054	Pin – Cotter	1
3	322–5	Bolt	1
4	106522	Chain – Lift	1
5	79–5720	Trunnion	1
6	3296–39	Nut	1
7	9335054	Pin – Cotter	1
8	106269	Bearing – Flanged	2
9	3256–62	Washer	3
10	32151–91	Ring – Retainer	2

Ref. No.	Part No.	Description	No. Used
11	121100	Lever – Lift	1
12	9335074	Pin – Cotter	2
13	1121	Key – Sq.	1
14	79–5700	Bellcrank	1
15	102374	Pin – Pivot	1
16	32120–47	Ring – Retaining	1
17	6229	Bearing	1
18	3256–23	Washer	1
19	3296–29	Nut	1
20	120400	Bar – Lift	1

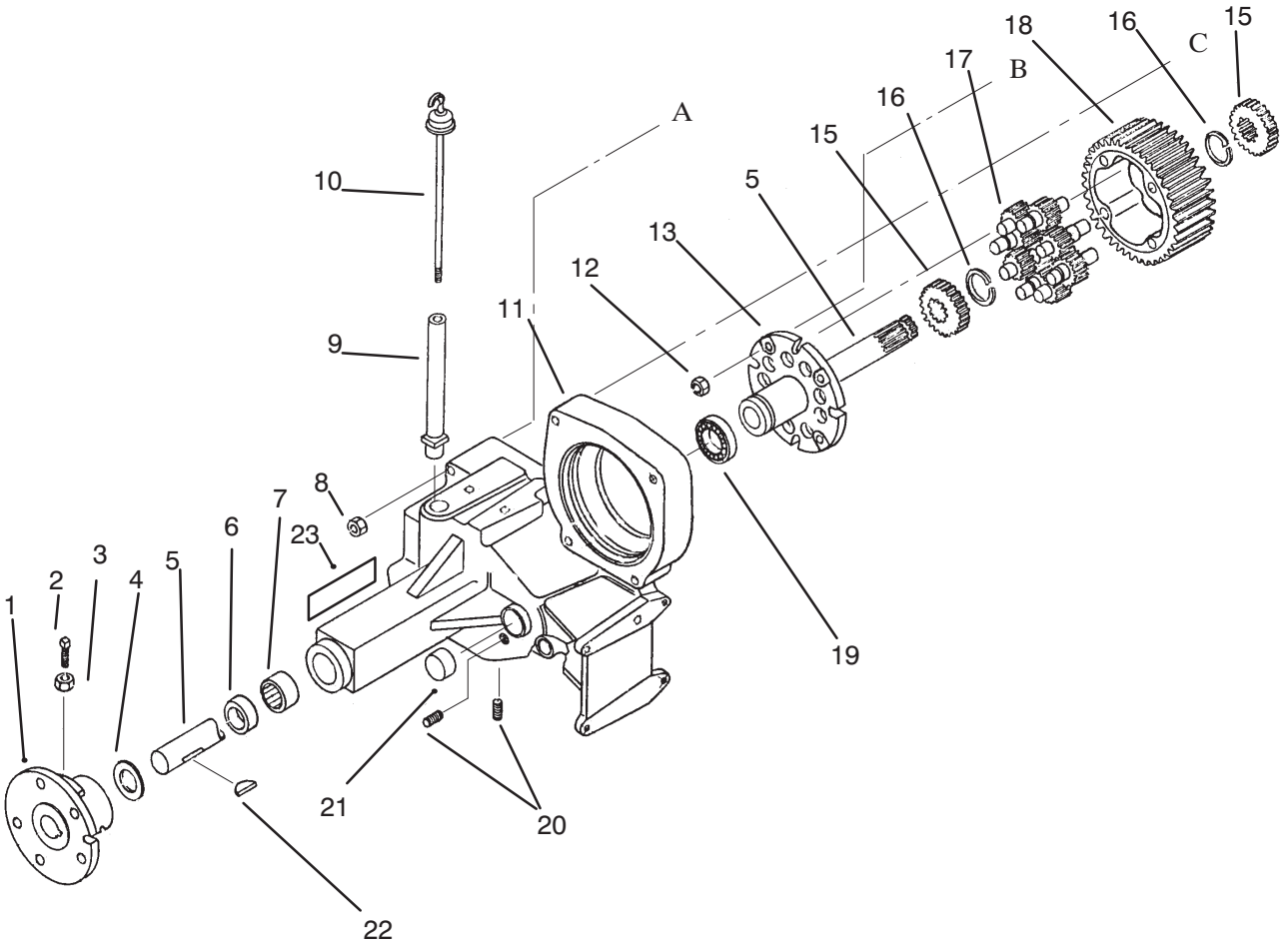

TRANSAXLE ASSEMBLY

Ref. No.	Part No.	Description	No. Used
1	105763	Hub – Rear	1
2	3243–5	Screw – Set	2
3	3218–3	Nut	2
4	106826	Washer – Thrust	1
5	108362	Axle – Rear, RH Long	1
6	6449	Axle – Seal	1
7	9416	Bearing – Needle	1
8	3296–39	Nut	3
9	106448	Tube – Filler	1
10	110768	Dipstick	1
11	92–7298	Case – Transaxle, RH (Incl. Ref.#23)	1
12	108881	Nut	4
13	111196	Cap – Differential End	1

Ref. No.	Part No.	Description	No. Used
15	101889	Gear – Differential Axle 24 Tooth	2
16	105876	Ring – Retaining	2
17	101623	Gear – Differential Pinion 11 Tooth	8
18	105061	Gear – Differential Ring 43 Tooth	1
19	111199	Bearing – Ball	1
20	281–10	Plug – Pipe	2
21	1532	Bearing – Needle	2
22	937108	Key – Woodruff	1
*	92–7297	Transaxle (Incl.. Ref. #23)	1
23	88–2790	Decal – Danger	1

Note : In Illustration Center lines A,B and C

Continue on next page

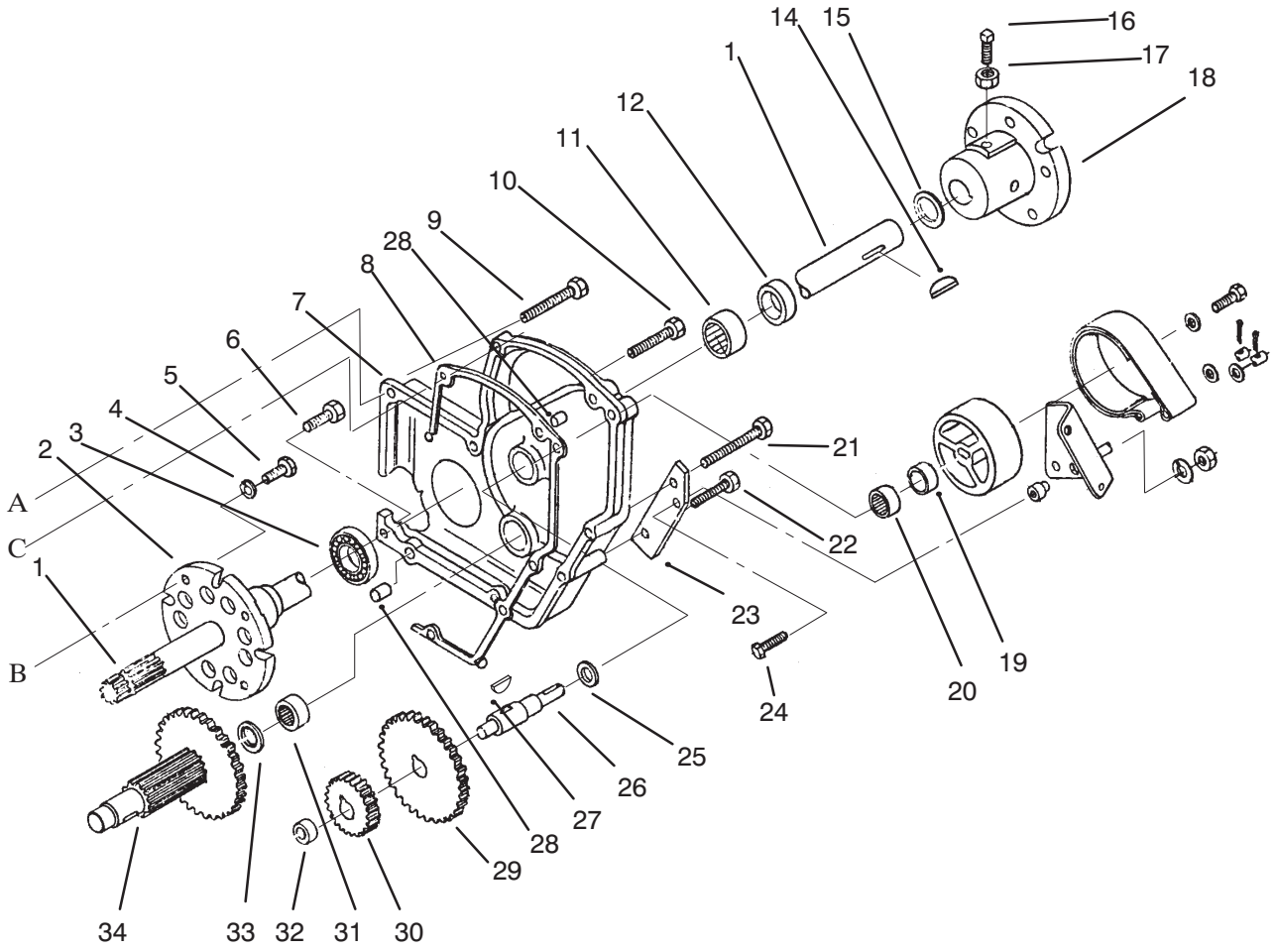

TRANSAXLE ASSEMBLY (Continued)

Ref. No.	Part No.	Description	No. Used
1	108361	Axle – Rear, LH Short	1
2	111196	Cap – Differential End	1
3	111199	Bearing – Ball	1
4	107374	Washer – Special	4
5	911423	Bolt	4
6	9080356	Bolt	1
7	111201	Case – Transaxle, LH	1
8	108312	Gasket – Case	1
9	323–15	Bolt	2
10	9080406	Bolt	1
11	9416	Bearing – Needle	1
12	6449	Axle – Seal	1
14	937108	Key – Woodruff	1
15	106826	Washer – Thrust	1
16	3243–5	Screw – Set	2
17	3218–3	Nut	2
18	105763	Hub – Rear	1

Ref. No.	Part No.	Description	No. Used
19	108357	Seal – Oil	1
20	1538	Bearing – Needle	1
21	323–26	Screw – Hex. Hd.	1
22	323–25	Screw – Hex. Hd.	3
23	109367	Bracket – Brake	1
24	323–9	Screw – Hex. Hd.	1
25	7956	Washer – Thrust	1
26	109370	Shaft	1
27	937099	Key – Woodruff	1
28	108363	Pin – Dowel	2
29	109752	Gear 46 Tooth	1
30	109742	Gear 20 Tooth	1
31	1532	Bearing – Needle	2
32	1518	Bearing – Needle	1
33	9547	Washer – Thrust	1
34	109703	Gear	1

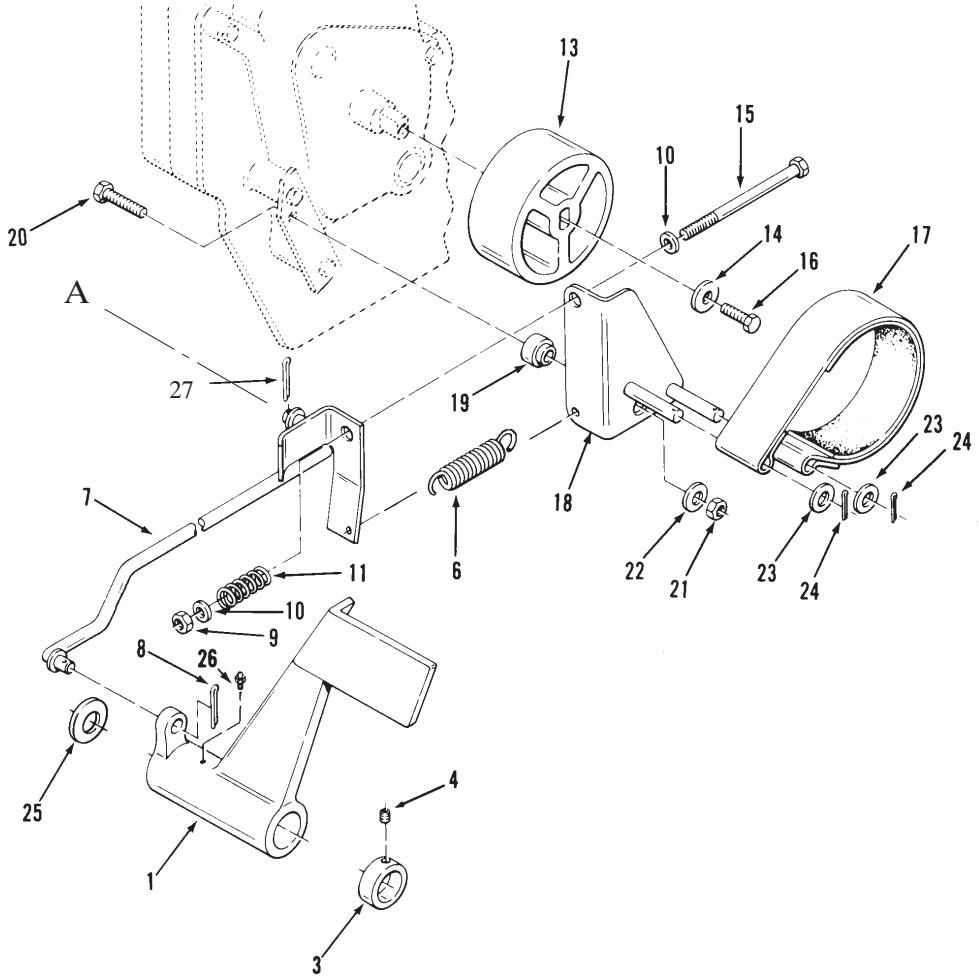

CLUTCH, BRAKE AND SPEED CONTROL LINKAGE

Ref. No.	Part No.	Description	No. Used
1	79–1350	Pedal – Brake	1
3	111383	Collar	1
4	3245–32	Screw – Set	1
6	103125	Spring – Brake Return	1
7	109372	Rod – Brake, Front	1
8	3272–11	Pin – Cotter	2
9	3296–39	Nut	1
10	3256–24	Washer	2
11	108680	Spring	1
13	106719	Drum – Brake	1
14	2844	Special Washer	1
15	323–23	Bolt	1

Ref. No.	Part No.	Description	No. Used
16	3235–22	Bolt	1
17	109371	Band – Brake	1
18	78–7740	Arm – Brake Pivot	1
19	109356	Bushing	1
20	323–9	Bolt	1
21	3296–39	Nut	1
22	3256–4	Washer	1
23	3256–6	Washer	2
24	3272–6	Pin – Cotter	2
25	1278	Washer – Shim	1
26	302–5	Fitting – Grease	1
27	933504	Pin – Cotter	1

Note : In Illustration Center lines A Continue on next page

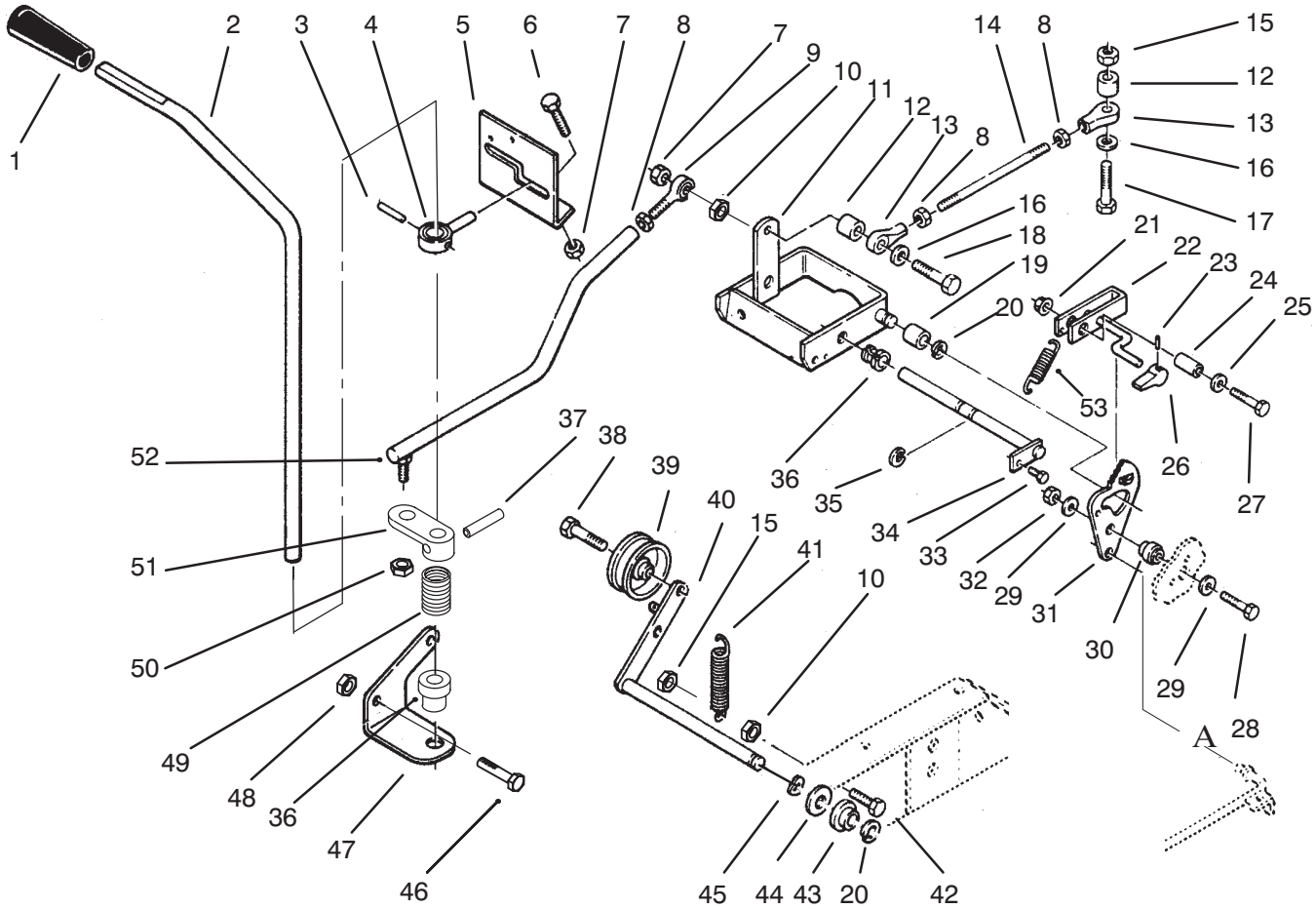

CLUTCH, BRAKE AND MOTION CONTROL LINKAGE

Ref. No.	Part No.	Description	No. Used
1	116635	Knob – Motion Control	1
2	78–5660	Lever – Motion Control	1
3	933198	Pin – Spirol	1
4	118660	Guide – Control	1
5	78–5631	Bracket – Control	1
6	321–4	Bolt	2
7	3296–42	Nut	4
8	3220–1	Nut	3
9	116407	Rod End	2
10	3217–5	Nut	2
11	113454	Control – Cam	1
12	100304	Spacer	2
13	110189	Rod End Asm	2
14	108904	Rod Control	1
15	32146–17	Nut	1
16	3256–22	Washer	2

Ref. No.	Part No.	Description	No. Used
17	321–9	Screw – Hex. Hd.	1
18	9114584	Bolt	2
19	100656	Bearing – Cam	1
20	32120–47	Ring – Retaining	4
21	102809	Nut – Special, Flanged	1
22	78–8500	Lever – Parking Brake	1
23	933135	Pin – Spirol	1
24	102025	Spacer	1
25	9202414	Washer	1
26	128860	Knob	1
27	323–9	Bolt	1
28	323–8	Bolt	1
29	3256–4	Washer	2
30	108717	Spacer	1
31	108716	Plate – Cam	1
32	3296–39	Nut	2

* Not Illustrated

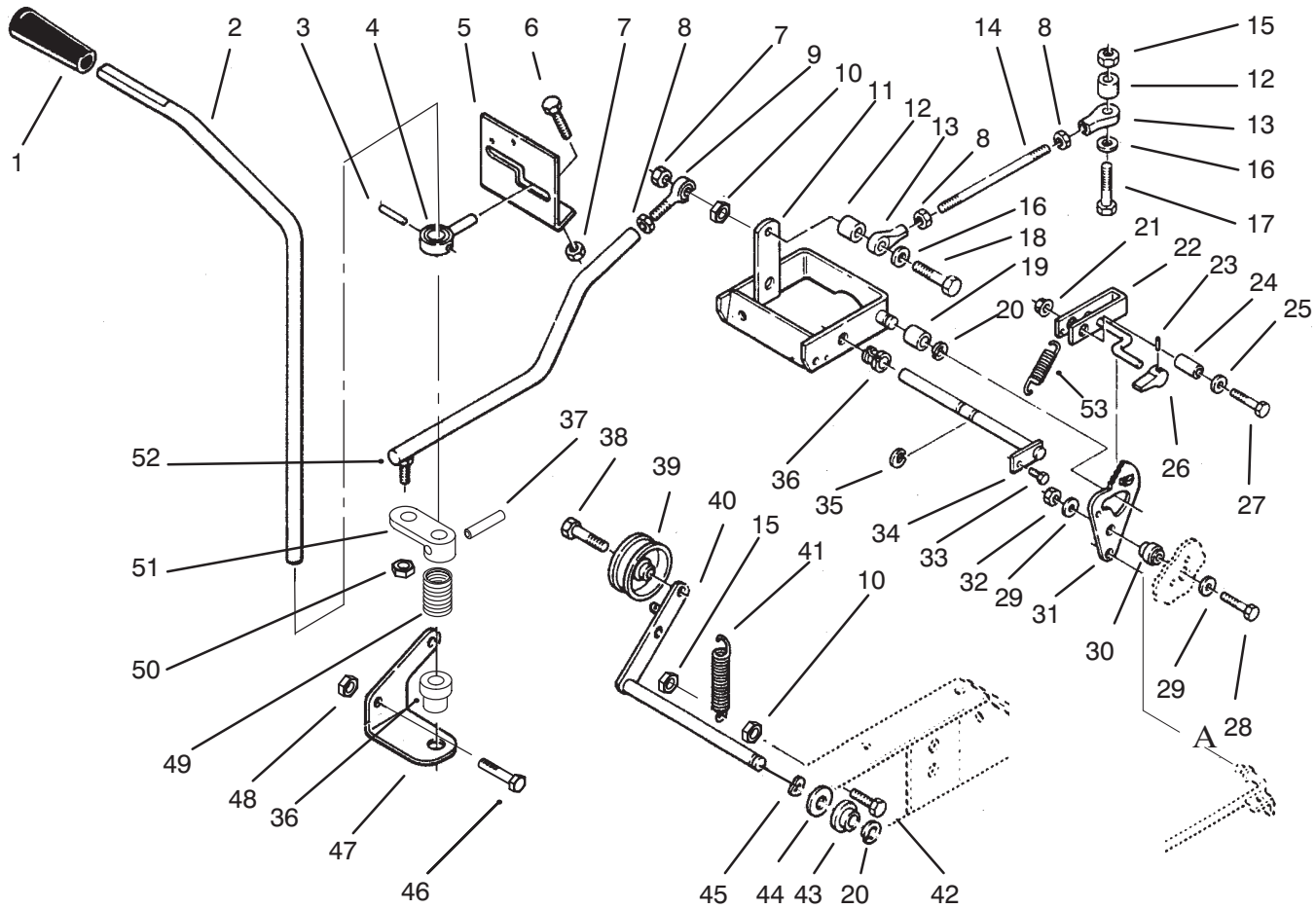

CLUTCH, BRAKE AND MOTION CONTROL LINKAGE

Ref. No.	Part No.	Description	No. Used
33	926694	Bolt	1
34	108496	Rod – Pivot	1
35	32120–47	Ring – Retaining	2
36	5983	Bushing	3
37	32312–94	Pin – Spirol	1
38	323–8	Screw – Hex. Hd.	1
39	112791	Pulley – Idler	1
40	78–6020	Rod – Pivot	1
41	107938	Spring	1
42	321–6	Bolt	1
43	7879	Bushing	1

Ref. No.	Part No.	Description	No. Used
44	3765	Washer – Shim	1
45	114823	Washer – Wave	2
46	322–3	Bolt	2
47	78–1540	Bracket – Control, Lower	1
48	3296–29	Nut	2
49	101938	Spring	1
50	3296–4	Nut	1
51	116321	Arm – Control	1
52	116324	Rod Assembly	1
53	83–2820	Spring	1

* Not Illustrated

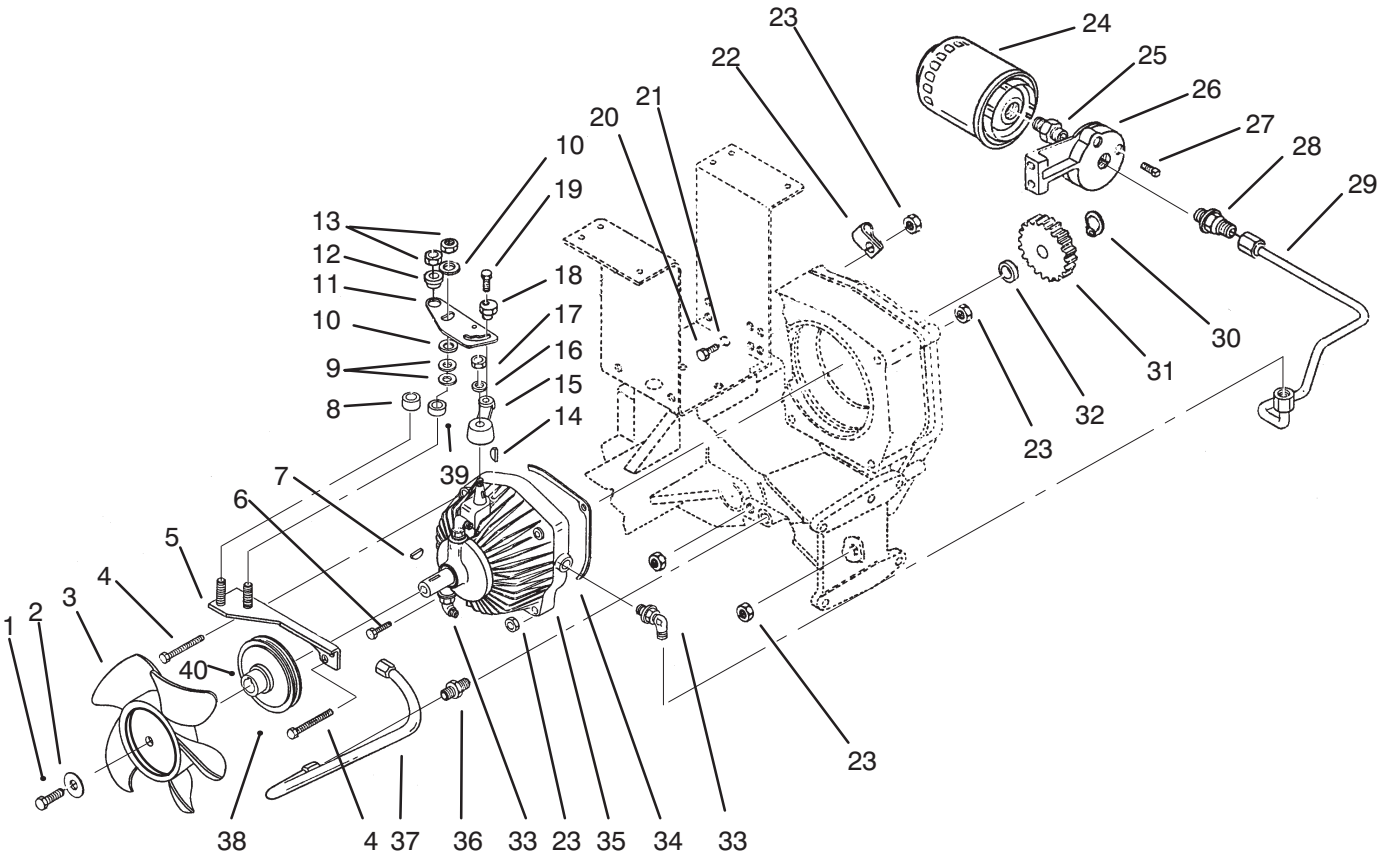

HYDROSTATIC TRANSMISSION

Ref. No.	Part No.	Description	No. Used
1	9080026	Bolt	1
2	103995	Washer – Special	1
3	108393	Fan	1
4	323–25	Screw – Cap Hex. Hd.	2
5	108329	Plate, Control	1
6	9080406	Screw – Cap Hex. Hd.	1
7	937089	Key – Hi–Pro	1
8	108326	Spacer – Pivot, Long	1
9	100365	Washer – Spring, Disc	2
10	100305	Washer – Friction	2
11	108333	Plate – Control, Speed	1
12	100309	Bushing – Pivot, Cam	1
13	108881	Nut	2
14	3257–24	Key – Woodruff	1
15	108325	Arm – Control, Speed	1
16	3256–26	Washer – Flat	1
17	3296–45	Nut – Lock	1
18	106661	Cam – Eccentric	1
19	9080196	Screw – Cap Hex. Hd.	1
20	322–3	Screw – Cap Hex. Hd.	2
21	3253–4	Washer – Lock	2

Ref. No.	Part No.	Description	No. Used
22	8830	”J”Clip	1
23	3296–39	Nut – Lock	4
24	79–5270	Filter – Oil	1
25	5991	Fitting – Filter	1
26	108323	Base – Filter	1
27	281–10	Plug – Pipe	3
28	102628	Fitting – Hyd., Straight (Incl. ”O”Ring)	1
*	973370	”O”Ring	1
29	79–5020	Tube	1
30	32120–64	Ring – Retaining	1
31	109751	Gear – 20 Teeth	1
32	108366	Spacer – Drive, Gear	1
33	108365	Fitting – Hydraulic 90°	2
34	108319	Gasket – Pump	1
35	108368	Assembly – Pump & Motor	1
36	108364	Fitting – Hyd., Straight	1
37	111217	Tube – Suction	1
38	108316	Pulley – Transmission Drive	1
39	108327	Spacer – Pivot, Short	1
*40	3242–2	Screw – Set	2

* Not Illustrated

EATON HYDROSTATIC TRANSMISSION # 1100–062

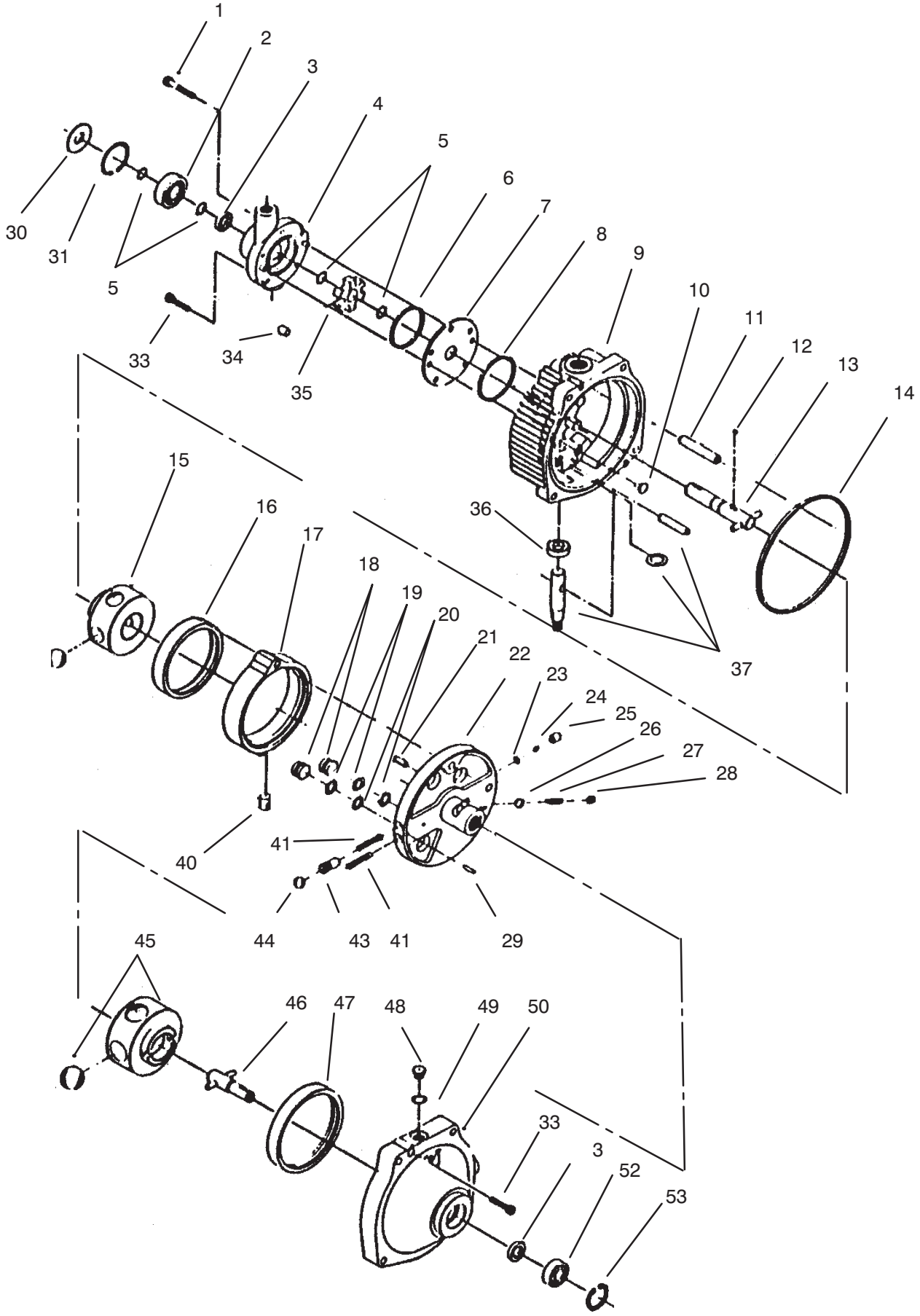

EATON HYDROSTATIC TRANSMISSION # 1100–062

Ref. No.	Part No.	Description	No. Used
1	56–2800	Screw – Hex. Hd. Soc.	1
2	56–2810	Bearing – Ball	1
3	56–2820	Seal	2
4	112637	Housing – Pump Assembly (Incl. Ref.# 3)	1
5	56–3090	Ring – Retaining	4
6	56–2850	Ring – Seal	1
7	56–2860	Plate – Pump	1
8	56–2870	Ring – Seal	1
9	112641	Cover Assembly (Incl. Ref. #11, 36 & 37)	1
10	56–2880	Button	2
11	56–2890	Pin – Dowl	1
12	56–2900	Pin – Drive	1
13	56–2980	Shaft – Input	1
14	56–2920	Ring – Seal	1
15	56–2930	Rotor / Ball – Pump	1
16	113136	Race – Pump	1
17	93–9810	Ring –Cam	1
18	56–2950	Piston	2
19	56–2960	Ring – Back Up	2
20	56–2970	”O”Ring	2
21	56–2980	Pin – Coil	1
22	56–2990	Pintle Assembly (Inc. Ref. #1, 18–21, 23–29 41, 43 & 44)	1
23	56–3000	Ring – Retaining	2
24	56–3010	Ball	2
25	56–3020	Body – Check Valve	2
26	56–3030	Ball	1
27	56–3040	Spring – Relief Valve	1
28	56–3050	Plug – Relief Valve	1
29	56–3060	Pin – Dowel	1
30	112652	Shield – Grass	1
31	112653	Ring – Retaining	1
33	56–3100	Screw – Soc. Hd.	6
34	56–3110	Roller	6
35	56–3120	Carrier	1
36	56–3130	Seal – Oil	1
37	56–3140	Kit – Control Shaft	1
40	56–3170	Insert – Cam Ring	1
41	56–3180	Spring	2
43	56–3200	Body – Acc. Valve	2
44	56–3210	Ball	2
45	56–3220	Rotor / Ball – Motor	1
46	56–3230	Shaft – Output	1
47	56–3240	Race – Motor	1
48	56–3250	Plug – Asm (Incl. Ref. #49)	1
49	56–3260	”O”Ring	1
50	93–9811	Body Assembly	1
52	56–3280	Bearing – Output	1
53	56–3290	Ring – Retaining	1
56	56–2940	Ring – Cam (Incl. Ref.#16–17)	1
*	56–3310	Kit – Seal, Overhaul (Incl. Ref.# 3, 6, 8, 14, 19, 20, 36, & 49)	1
*	93–9812	Body Assembly (Incl. Ref. # 3, 33, 46–50. 52, 53 & 57)	1

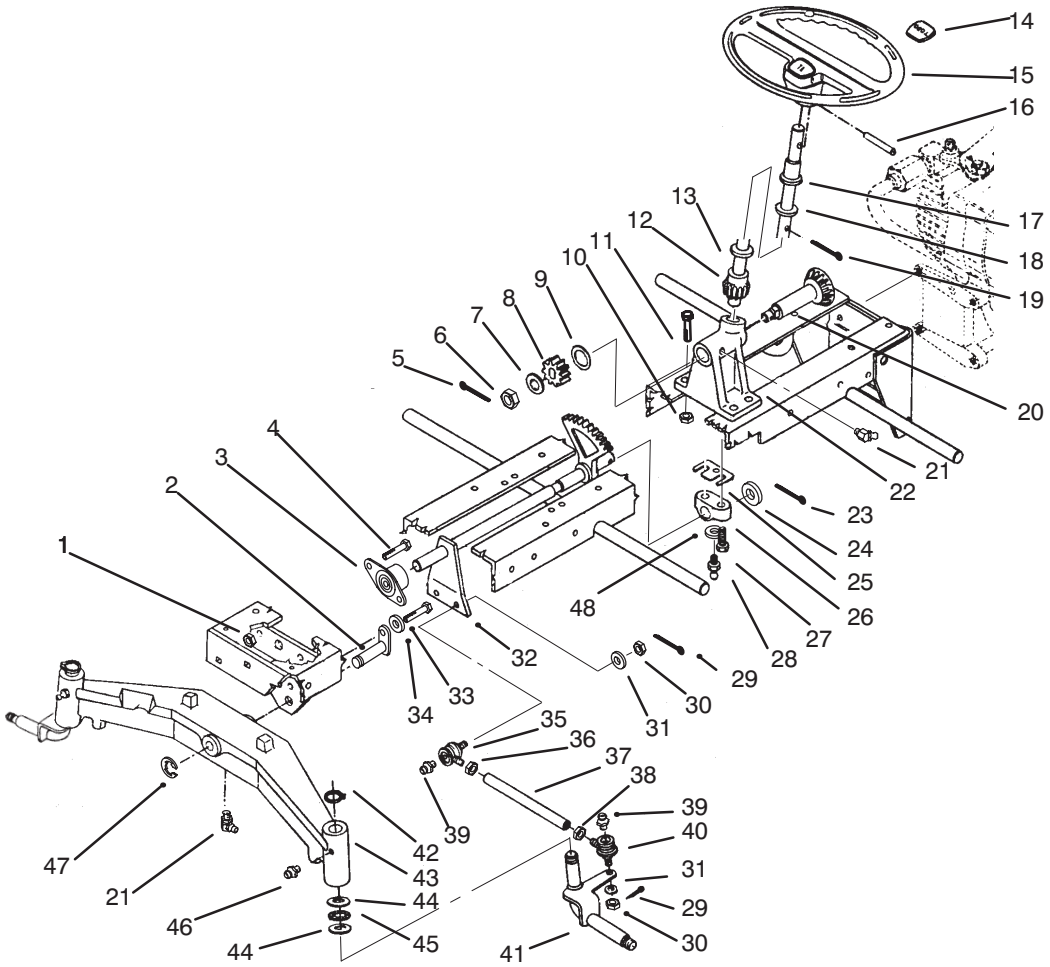

FRONT AXLE AND STEERING

Ref. No.	Part No.	Description	No. Used
1	3296–39	Nut	2
2	6216	Pin & Plate	1
3	6472	Bearing – Flanged	1
4	323–6	Bolt	2
5	3272–11	Pin – Cotter	1
6	915032	Nut	1
7	3256–26	Washer	1
8	78–1481	Pinion	1
9	9202624	Washer	1
10	3296–39	Nut	4
11	323–9	Bolt	6
12	92–0995	Shaft – Upper Steering	1
13	237–69	”O”Ring	1
14	78–0370	Insert – Logo	1

Ref. No.	Part No.	Description	No. Used
15	76–1420	Steering Wheel (Incl. Ref. #14)	1
16	32121–111	Pin – Spirol	1
17	109189	Flange – Bearing	1
18	5210	Washer – Shim	6
19	3272–21	Pin – Cotter	1
20	78–1450	Shaft	1
21	1481	Fitting – Grease, 45°	2
22	78–1411	Support – Steering	1
23	3272–22	Pin – Cotter	1
24	9202164	Washer	1
25	78–1531	Shim 0.010	3
26	88–3240	Block – Bearing	1
27	9080376	Bolt	2

*Not ILLustrated

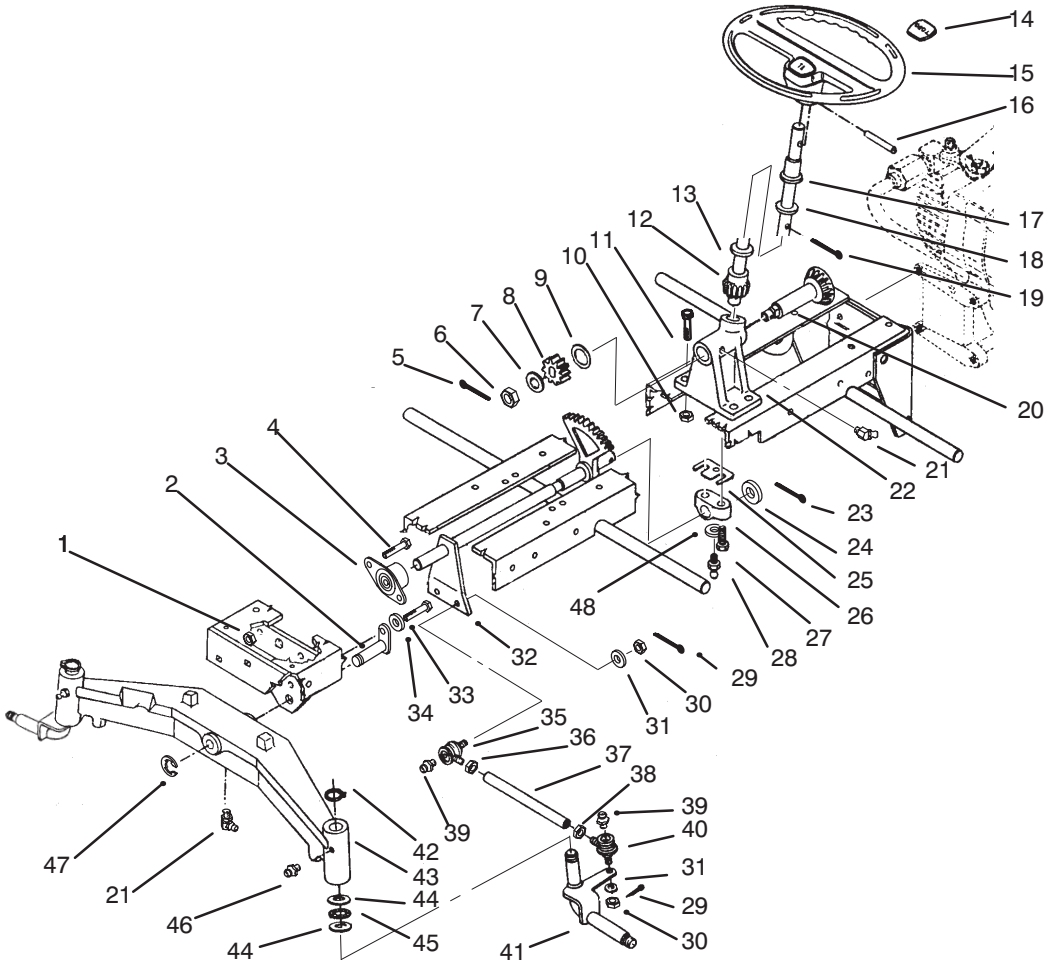

FRONT AXLE AND STEERING (Continued)

Ref. No.	Part No.	Description	No. Used
28	302–16	Fitting – Grease	1
29	3272–7	Pin – Cotter	4
30	915031	Nut	4
31	920242	Spacer	4
32	78–1490	Shaft – Lower Steering	1
33	322–1	Bolt	1
34	3253–4	Washer – Lock	1
35	112772	Tie Rod End – Thread RH (Incl. Ref. #30)	2
36	3220–11	Nut	2
37	112773	Tube	2
38	112775	Nut – Thread LH	2

Ref. No.	Part No.	Description	No. Used
39	302–5	Fitting – Grease	4
40	112771	Tie Rod End – Thread LH (Incl. Ref. #30)	2
41	112764	Spindle – Front, RH	1
*	112765	Spindle – Front, LH	1
42	32151–29	Ring – Retaining	2
43	116823	Axle – Front	1
44	9548	Washer – Thrust	4
45	9865	Bearing – Thrust	2
46	302–5	Fitting – Grease, Straight	2
47	5618	Ring – Retaining	1
48	3254–8	Washer – Lock	1

*Not ILLustrated

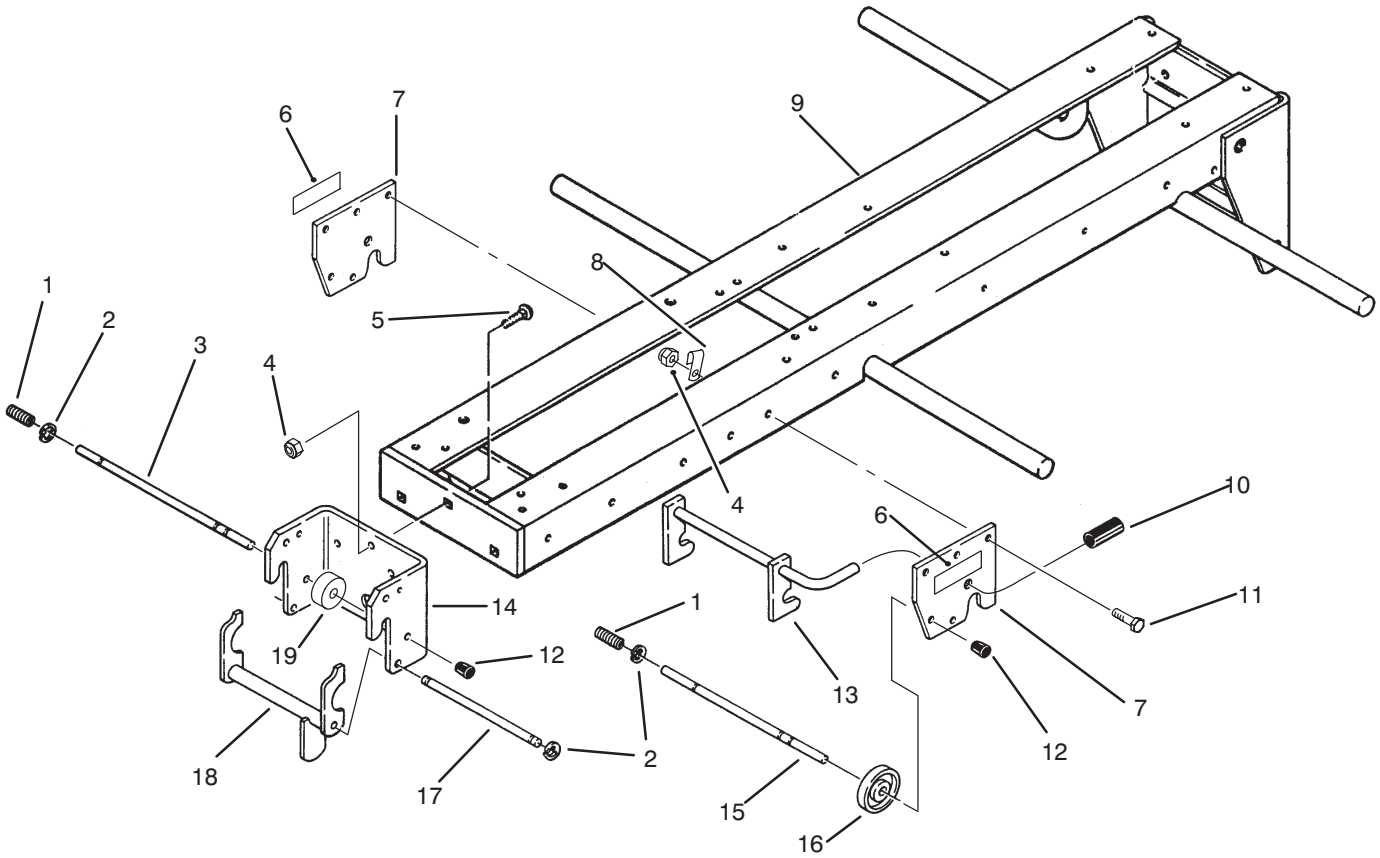

FRAME AND HITCH ASSEMBLY

Ref. No.	Part No.	Description	No. Used
1	8616	Spring	2
2	105797	Ring − Retaining	8
3	101751	Rod − Front Hitch Lock	1
4	3296−39	Nut − Lock	9
5	3231−25	Bolt − Carriage	3
6	92−8747	Decal − Attach−A−Matic	2
7	102644	Plate − Mid Hitch	2
8	8830	Clip	1
9	78−2680	Frame	1
10	9038	Grip	1

Ref. No.	Part No.	Description	No. Used
11	323−44	Screw − Cap Hex. Hd.	6
12	105316	Cap − Lock Rod	2
13	117930	Latch − Mid Hitch	1
14	101711	Housing − Front Hitch	1
15	83−6520	Rod − Lock	1
16	101017	Lock	1
17	101750	Rod	1
18	93−1613	Latch − Front Hitch	1
19	101707	Lock	1

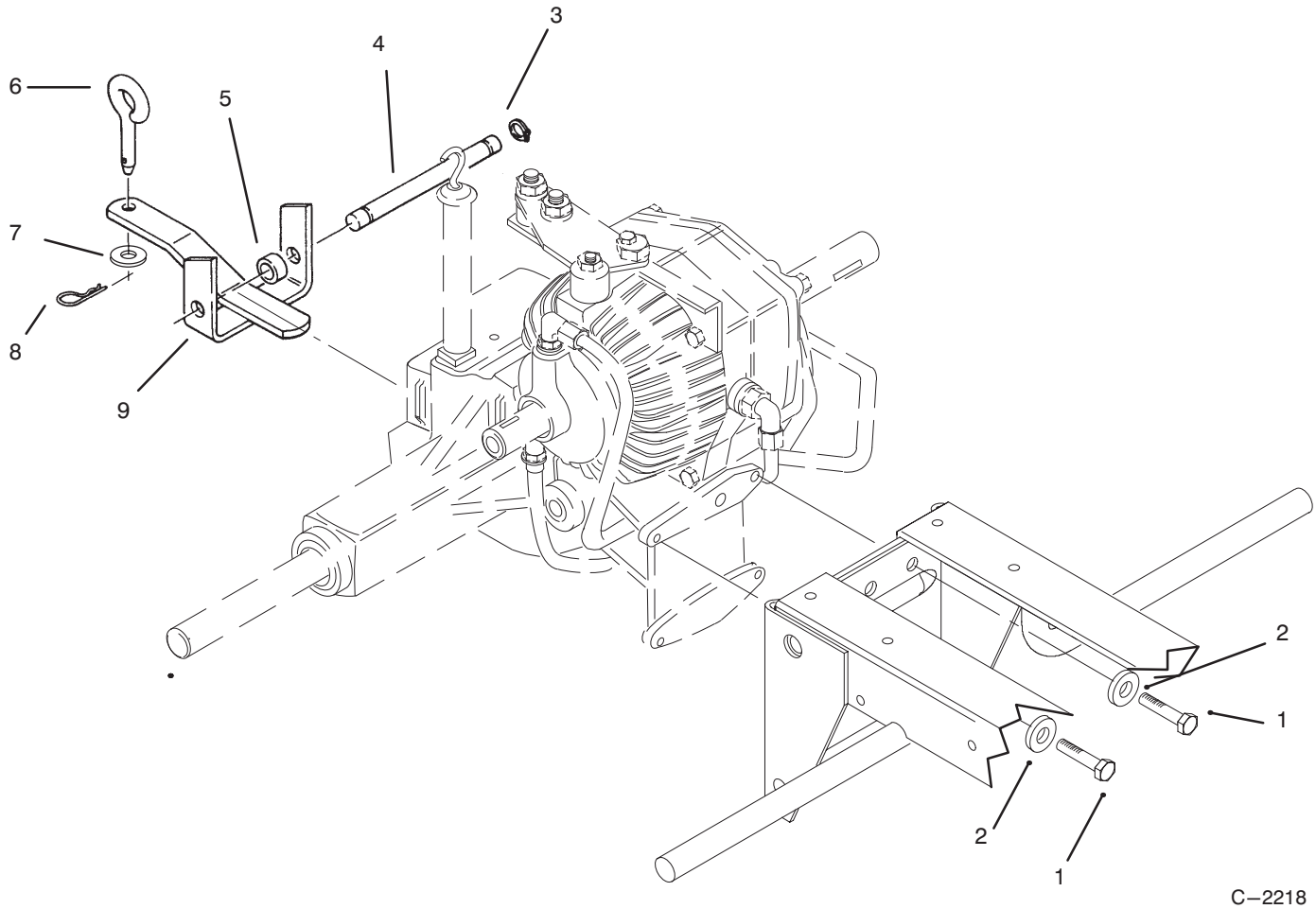

REAR HITCH ASSEMBLY

Ref. No.	Part No.	Description	No. Used
1	323–5	Screw – Cap Hex. Hd.	4
2	3253–21	Washer – Lock	4
3	5618	Ring – Retaining	2
4	105269	Shaft – Drawbar Hitch	1
5	979120	Spacer	2

Ref. No.	Part No.	Description	No. Used
6	106634	Pin – Hitch	1
7	3256–26	Washer – Flat	1
8	933505	Hairpin – Cotter	1
9	1644	Hitch – Drawbar	1

ENGINE AND EXHAUST

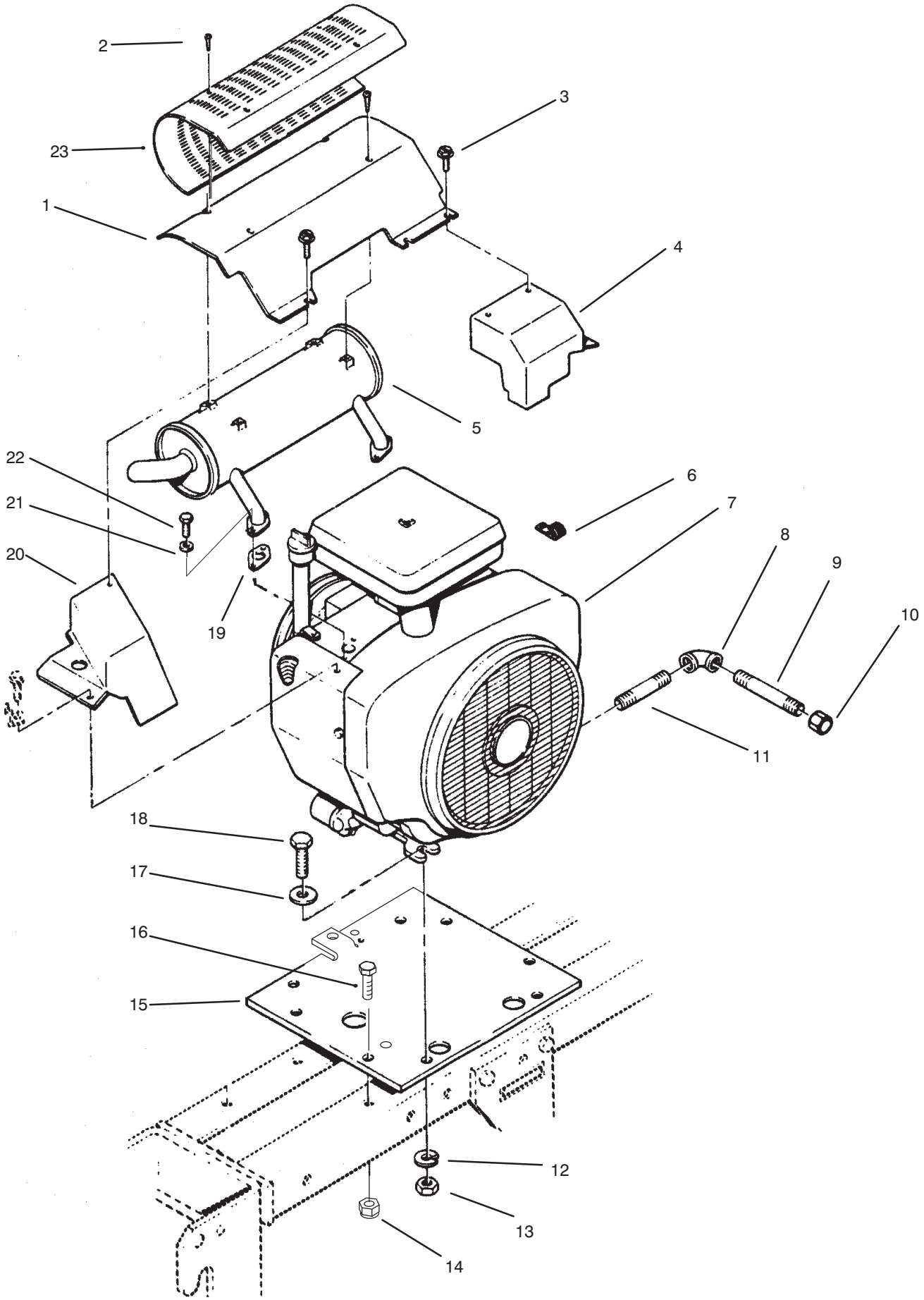

ENGINE AND EXHAUST

Ref. No.	Part No.	Description	No. Used
1	114217	Deflector – Air	1
2	114888	Screw	6
3	12–3270	Screw – Hex. Hd.	3
4	114216	Cover – Exhaust, Rear	1
5	116471	Muffler	1
6	8830	Clip	1
7	79–5220	Engine – 20HP	1
8	114764	Elbow 90°	1
9	114763	Pipe	1
10	288–4	Cap	1
11	114636	Nipple	1
12	3253–21	Washer – Lock	4
13	3217–7	Nut	4
14	3296–39	Nut	4
15	116609	Plate – Engine	1
16	323–7	Screw – Cap Hex. Hd.	4
17	3256–24	Washer – Flat	4
18	323–8	Screw – Cap Hex. Hd.	4
19	57–9210	Gasket – Exhaust	2
20	114215	Cover – Exhaust, Front	1
21	3253–4	Washer – Lock	4
22	322–3	Screw – Cap Hex. Hd.	4
23	115783	Shield – Muffler	1

BLOWER HOUSING AND GOVERNOR

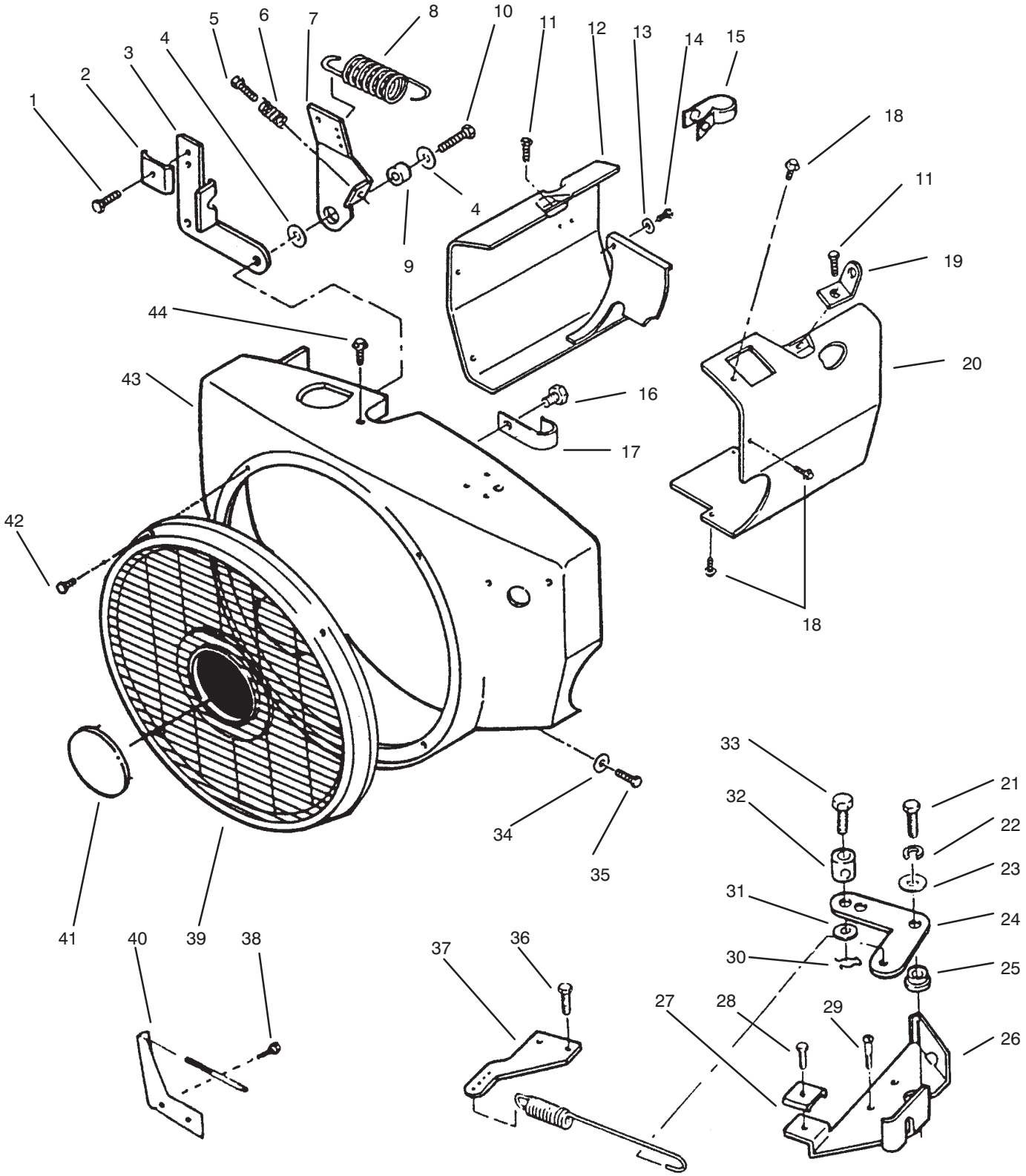

BLOWER HOUSING AND GOVERNOR

Ref. No.	Part No.	Description	No. Used
1	72–3900	Screw – Tapping Hex Hd.	1
2	57–9190	Clamp – Cable	1
3	NN10508	Bracket – Cable	1
4	59–0830	Washer – Flat	2
5	59–1030	Screw – Tapping Hex. Hd.	1
6	59–0430	Spring – Idle Setting	1
7	79–6370	Arm – Governor Control Without Swivel	1
8	57–9100	Spring – Governor	1
9	57–9120	Bushing – Control Arm	1
10		Screw	1
11	82–1600	Screw – Cap Hex Fl. Hd.	2
12	92–0920	Housing – Cylinder Air, LH	1
13	59–0830	Washer – Flat	2
14	59–0980	Screw – Tapping, Wash. Hd.	2
15	59–0580	Clamp – Wire, Alternator	1
16	82–1540	Screw – Hex. Washer Hd.	1
17	71–6220	Clip – Wire	1
18	59–1080	Screw – Cap Hex. Fl. Hd.	4
19	71–6080	Bracket – Lift	2
20	92–0921	Housing – Cylinder Air, RH	1
21	82–1370	Screw – Hex. Hd.	1
22	82–1620	Washer – Lock	1
23	59–0830	Washer – Flat	1
24	201256	Link – Governor Control	1
25	79–6400	Bushing – Gov. Control	1
26	79–6390	Bracket – Gov. Control	1
27	57–9190	Clamp – Cable	1
28	59–1010	Screw – Self Tap. Fl. Hd.	1
29	201327	Screw	3
30	59–0720	Pin – Cotter	1
31		Washer	1
32	57–9120	Swivel – Throttle Lever	1
33	72–3890	Screw – Hex. Hd.	1
34	59–0820	Washer – Flat	4
35	59–0980	Screw – Tapping, Fl. Hd.	4
36	59–1050	Screw – Self Tap. Fl. Hd.	1
37	79–6420	Adapter – Governor Arm	1
38	59–1100	Screw – Lock Hd.	2
39	82–0620	Guard – Stationary	1
40	NN10832	Bracket – Governor Adjust	1
41	118530	Plate – Toro Logo	1
42	82–1590	Screw – Pan Hd. Taptite	4
43	NN10769	Housing – Blower	1
44	59–0970	Screw – Tapping, Fl. Hd.	2

ENGINE CYLINDER BLOCK

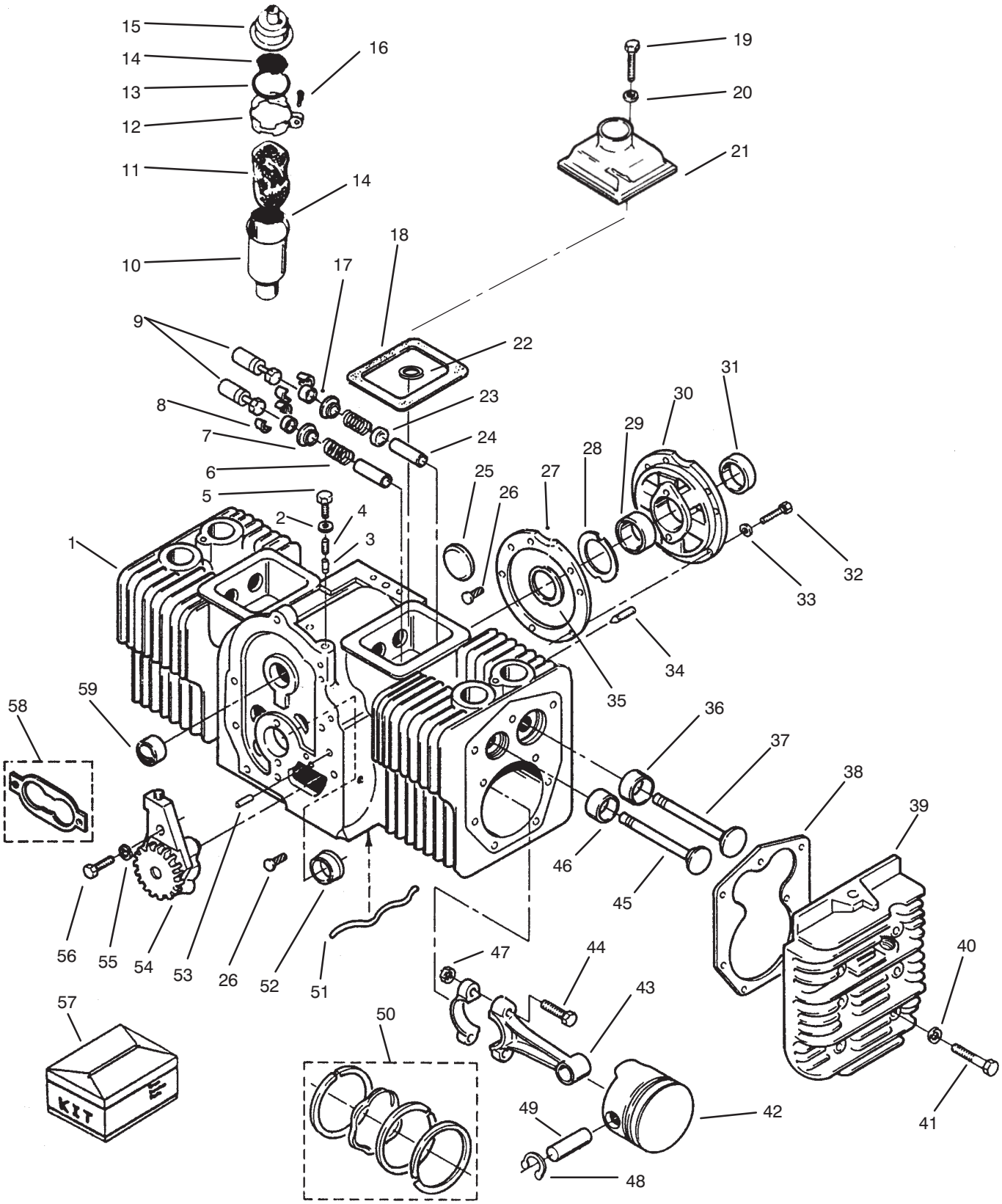

C–2061

ENGINE CYLINDER BLOCK

Ref. No.	Part No.	Description	No. Used
1	92–0900	Block – Cylinder (Short)	1
2	57–9760	Washer – Flat, Copper	1
3	57–8470	Plunger – Bypass Valve	1
4	59–0280	Spring – Bypass Valve	1
5	59–0910	Screw – Cap Hex Hd.	1
6	71–5790	Spring – Valve	4
7	71–5800	Washer – Valve Spring	4
8	NN10082	Lock – Valve Spring	8
9		Tappet – Valve	
9	57–8450	Standard	4
9	59–0260	.002” Oversize	4
10	82–0540	Tube – Breather	1
11	57–8580	Baffle – Breather Tube	1
12	82–0530	Clamp – Tube, Breather	1
13	82–0570	”O”Ring – Cap, Breather	1
14	82–0560	Screen – Tube, Breather	2
15	82–0550	Cap & Valve – Breather	1
16	82–1480	Screw – Tapping Round Hd.	1
17	71–5830	Cap – Valve	4
18	57–8280	Gasket – Valve Cover	2
19	NN10370	Screw – Cap Hex Hd.	2
20	57–9740	Washer – Flat, Copper	2
21	NN10821	Cover – Valve	1
22	59–0820	Washer – Flat	1
23	71–6180	Seal – Intake Valve	2
24	71–6250	Guide – Valve, Exhaust	2
24	71–6260	Guide – Valve, Intake	2
25	57–9690	Plug – Welch, Camshaft	1
26	59–0730	Pin – Drive, Bearing Stop	4
27	57–8010	Gasket – Bearing Plate	1
28	57–8170	Shim – Crankshaft .005”	A/R
29		Bearing – Crankshaft, Rear (Incl. Ref. #35)	
29	57–8050	Standard	1
29	59–0020	.002” Undersize	1
29	57–8060	.010” Undersize	1
29	59–0030	.020” Undersize	1
29	59–0040	.030” Undersize	1
30	82–0020	Plate – Bearing, Rear	1
31	57–9590	Seal – Oil, Crankshaft Rear	1
32	59–0880	Screw – Cap Flanged Hd.	5
33	3253–5	Washer	5
33	82–1310	Washer – Lock	5
34	3247–4	Setscrew – Socket Hd.	2
35	57–8160	Washer – Thrust	2
36		Insert – Valve Seat, Intake	
36	59–0050	Standard	2
36	59–0080	.010” Oversize	2
37	71–5770	Valve – Intake	2

Ref. No.	Part No.	Description	No. Used
38	57–8330	Gasket – Cylinder Head	2
39	79–6280	Head – Cylinder	2
39	59–0180	Side – Right	1
39	71–5810	Side – Left	1
40	57–9770	Washer – Flat	18
41	59–0900	Screw – Cap Hex Hd	18
42		Piston (Incl. Ref. #48–49)	
42	82–1800	Standard	2
42	92–0902	.010” Oversize	2
42	92–0903	.020” Oversize	2
42	92–0904	.030” Oversize	2
43		Rod – Connecting (Incl. Ref. #44 & 47)	
43	57–8420	Standard	2
43	57–8430	.010” Undersize	2
43	57–8440	.020” Undersize	2
43	59–0250	.030” Undersize	2
44	57–8410	Bolt – Connecting Rod	4
45	71–5780	Valve – Exhaust	2
46		Insert – Valve Seat, Exhaust	
46	59–0100	Standard	2
46	59–0110	.002” Oversize	2
46	59–0120	.005” Oversize	2
46	59–0130	.010” Oversize	2
46	59–0140	.025” Oversize	2
47	57–9790	Nut	4
48	57–9720	Ring – Retaining	4
49	71–6310	Pin – Piston	2
50		Kit – Ring, Piston	
50	92–0905	Standard	2
50	92–0906	.005” Oversize	2
50	92–0907	.010” Oversize	2
50	92–0908	.020” Oversize	2
50	92–0909	.030” Oversize	2
51	59–0290	Tube – Oil, Cylinder Block	1
52		Bearing – Crankshaft, Front, Flanged	
52	57–8020	Standard	1
52	57–9360	.002” Undersize	1
52	57–8030	.010” Undersize	1
52	57–9800	.020” Undersize	1
52	59–0010	.030” Undersize	1
53	59–0750	Pin – Alignment, Gear Cover	2
54	57–8480	Pump – Oil	1
55	82–1340	Washer – Flat	2
56	82–1370	Screw – Cap Hex. Hd.	2
57	71–6290	Kit – Gasket Complete	1
58	57–8460	Gasket Kit – Oil Pump	1
59	57–8000	Bearing – Camshaft	2

3317−377A

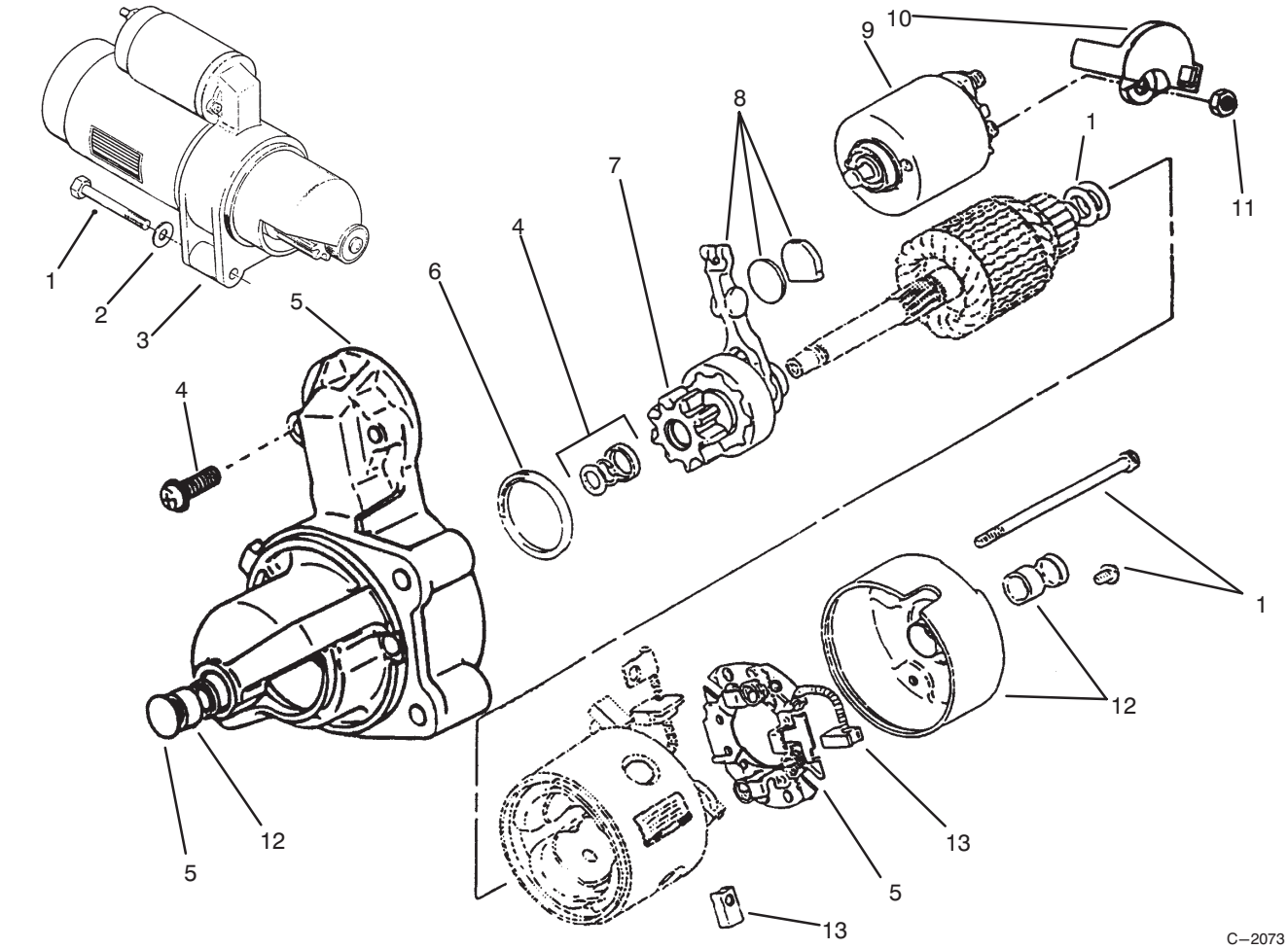

STARTER

Ref. No.	Part No.	Description	No. Used
1	79−6580	Screw − Cap Hex. Hd.	2
2	57−9770	Washer − Flat	2
3	71−6040	Starter − Solenoid Shift, (Code 33AT)	1
4	62−2760	Kit − Hardware, Starter (Includes (2) Solenoid Mtg Screws, 2 Thru Bolts, Armature Shims, Pinion Collar, & Retaining Ring)	1
5	NN10929	Kit − Mounting Bracket (Incl. Ref. #13)	1
6	NN10886	Seal − Dust	1
7	72−3940	Assembly − Clutch, Starter (Includes Pinion Gear)	1

Ref. No.	Part No.	Description	No. Used
8	62−2770	Kit − Shift Lever, Starter (Includes Lever, Wear Plate & Rubber Plug)	1
9	72−3930	Kit − Solenoid, Starter (Includes Solenoid & Spring Plunger)	1
10	NN10930	Cap − Starter, Solenoid	1
11	82−1350	Nut	1
12	62−2760	Kit − Bushing, Starter (Incl. Rear Cap with Bushing & Front Bushing)	1
13	62−2740	Kit − Brush, Starter (Includes (2) Negative & (1) Positive Brushes)	1

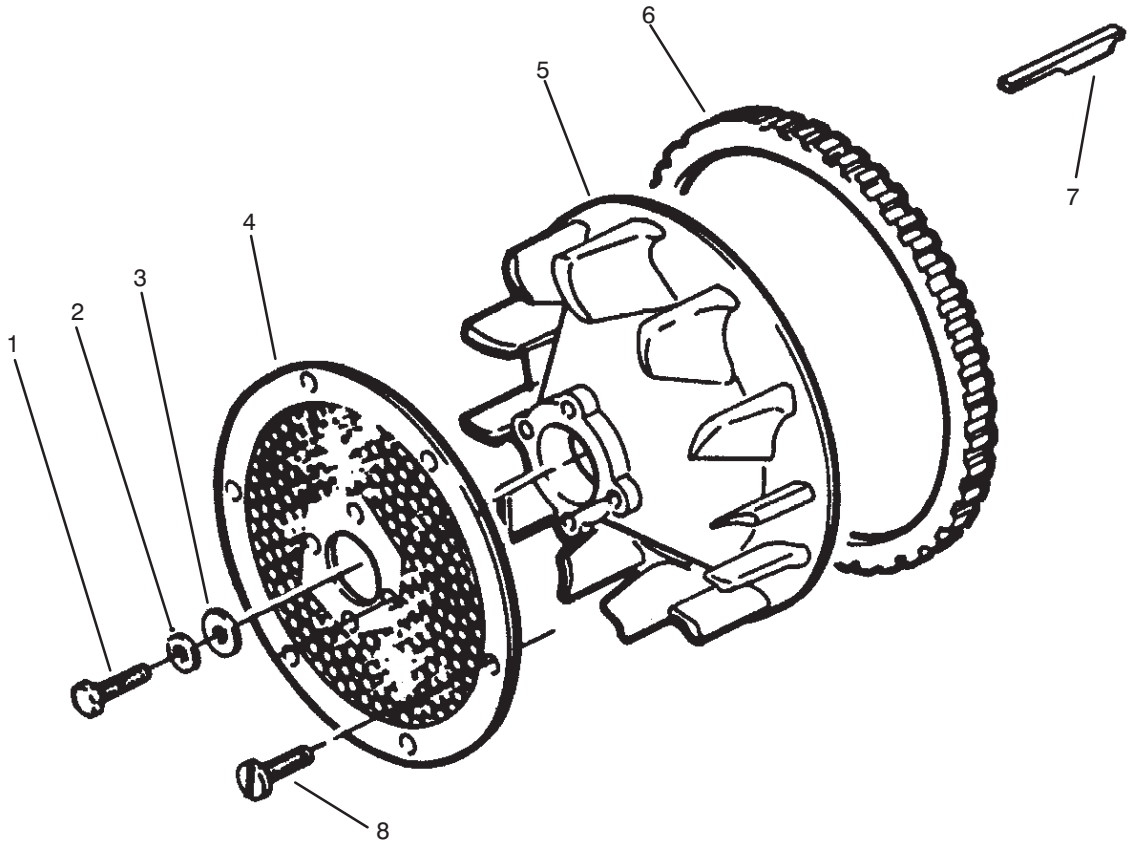

C–2062

BLOWER SCREEN & RING

Ref. No.	Part No.	Description	No. Used
1	57–8150	Screw – Cap Hex Hd.	1
2	82–1320	Washer – Flat	1
3	59–0810	Washer – Flat	1
4	79–6440	Screen – Air Inlet	1
5	71–5920	Flywheel (Incl. Ref. #6)	1

Ref. No.	Part No.	Description	No. Used
6	57–8180	Gear – Ring	1
7	71–6190	Key – Flywheel	1
8	71–6340	Screw	6

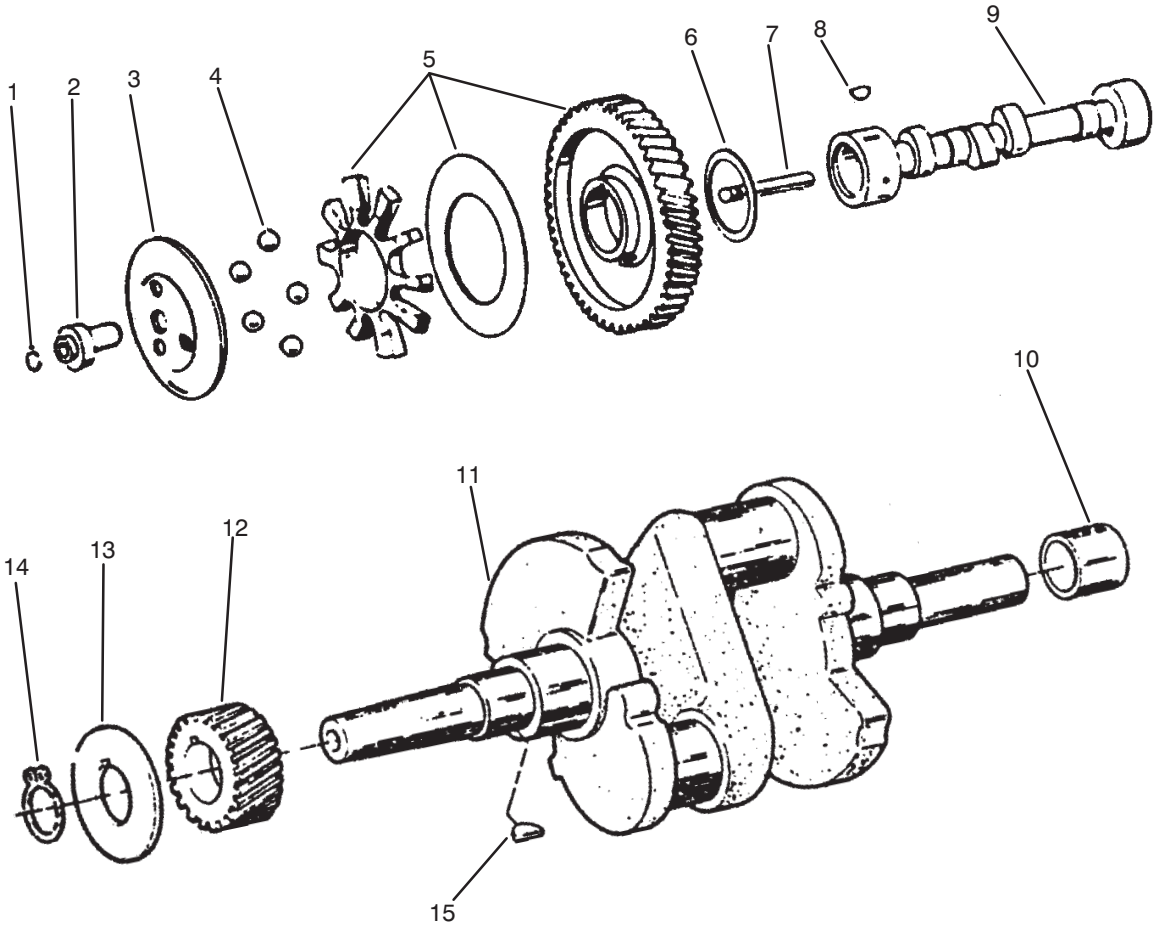

C–2063

CAMSHAFT & CRANKSHAFT

Ref. No.	Part No.	Description	No. Used
1	57–9090	Ring – Retaining	1
2	57–9130	Hub – Governor Cup	1
3	59–0450	Cup – Governor	1
4	57–9640	Ball – Governor	5
5	57–8210	Gear – Camshaft (Incl. Gear, Spacer, & Plate)	1
6	57–8230	Washer – Thrust, Special	1
7	59–0400	Pin – Center	1
8	57–9660	Key – Woodruff	1

Ref. No.	Part No.	Description	No. Used
9	71–6320	Camshaft (Incl. Ref. #7)	1
10	92–0911	Sleeve –Bearing	1
11	NN10773	Crankshaft (Incl. Ref. #15)	1
12	57–8130	Gear – Crankshaft	1
13	57–8140	Washer – Gear	1
14	57–9710	Ring – Retaining	1
15	57–9660	Key – Crankshaft Gear	1

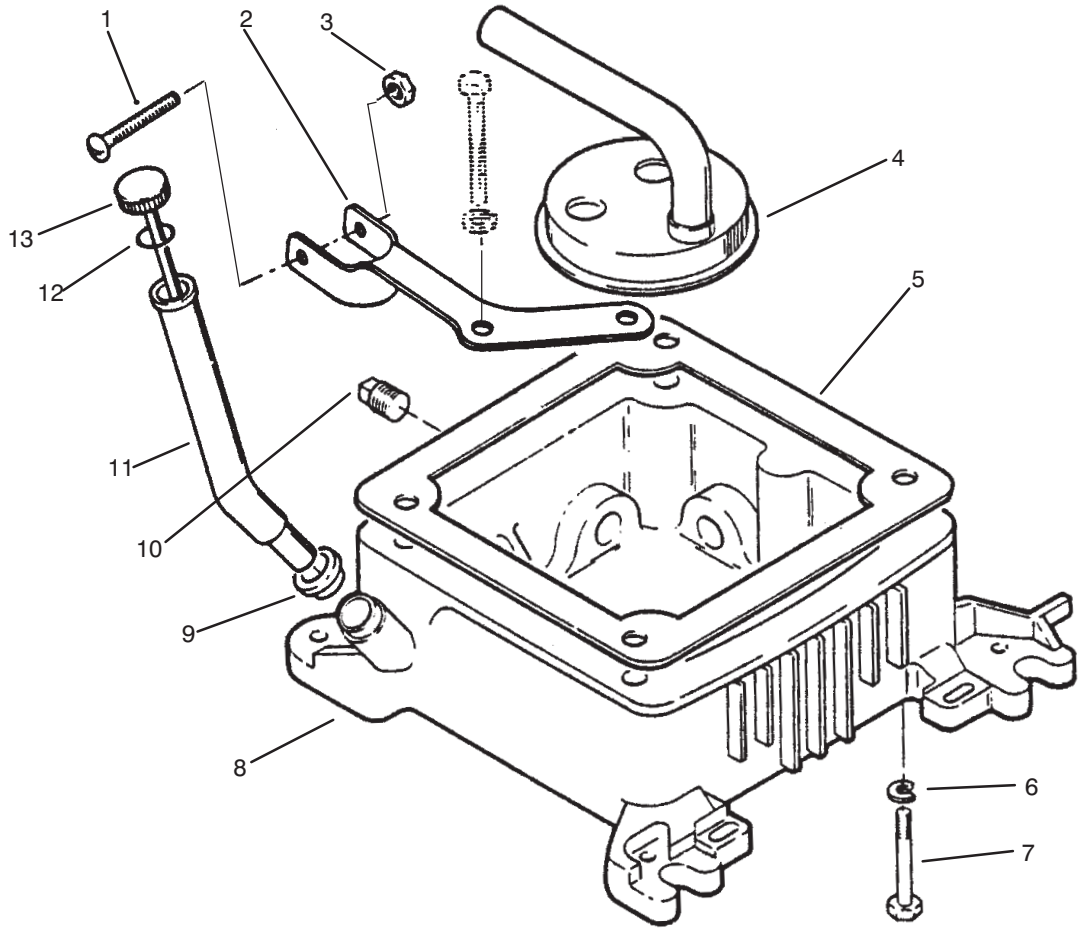

C–2064

OIL FILL TUBE, BRACKET & BASE

Ref. No.	Part No.	Description	No. Used
1	82–1560	Screw – Pan Hd.	1
2	79–6460	Bracket – Fill Tube	1
3	82–1700	Nut – Speed Type U	1
4	57–8490	Cup – Intake, Oil Pump	1
5	57–8090	Gasket – Oil Base	1
6	82–1310	Washer – Flat	4
7	NN10379	Screw – Cap Hex Hd.	4
8	71–5730	Base – Oil (Incl. Ref. #10)	1

Ref. No.	Part No.	Description	No. Used
9	71–6170	Seal – Oil Fill Tube	1
10	82–1130	Plug – Sq. Hd.	2
11	NN10448	Tube – Oil Fill	1
12	57–9610	”O”Ring	1
13	NN10159	Cap & Indicator – Oil Fill (Incl. Ref. #12)	1

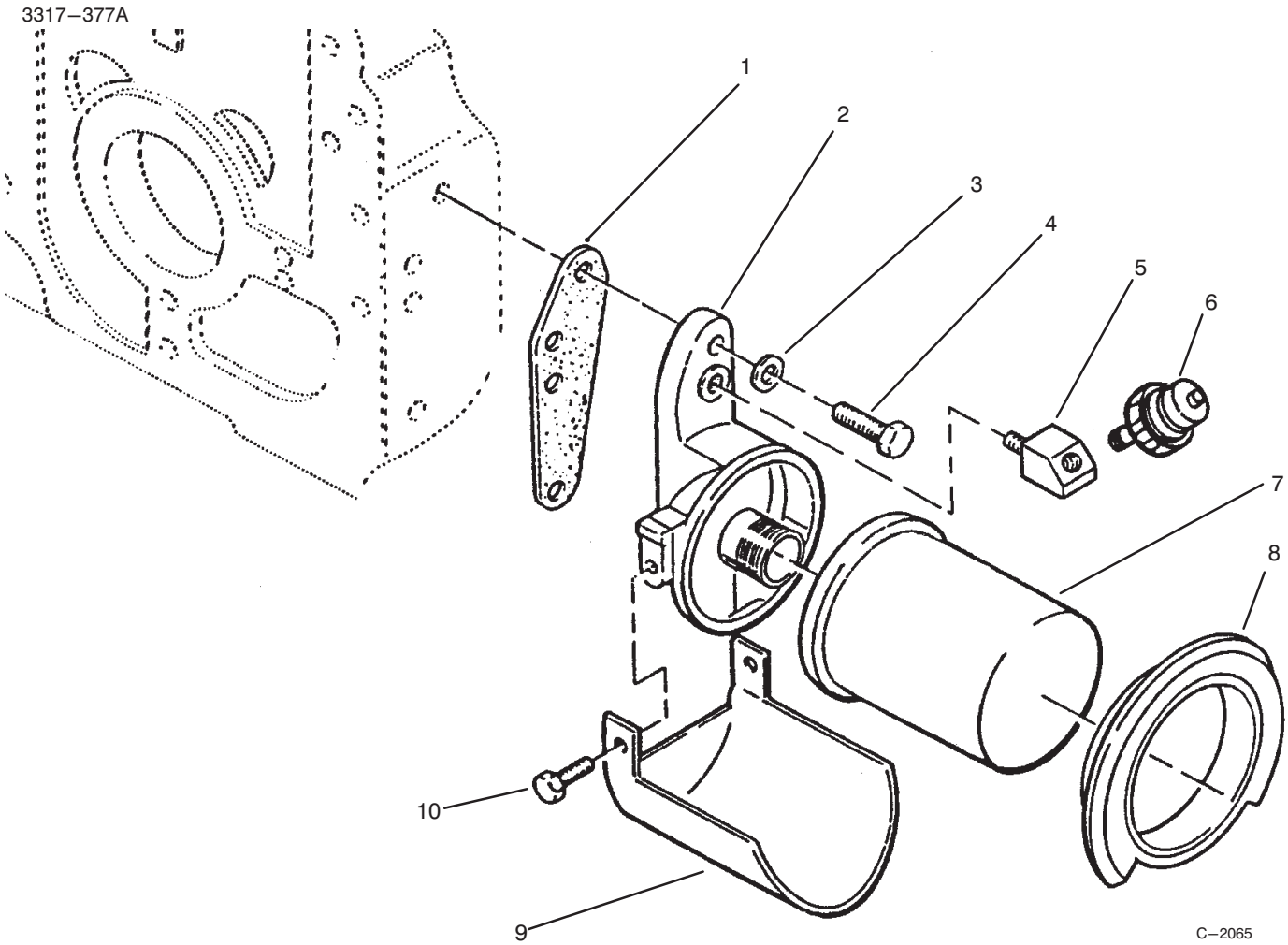

OIL FILTER AND LOW OIL PRESSURE CUT–OFF SWITCH

Ref. No.	Part No.	Description	No. Used
1	79–6470	Gasket – Oil Filter Adapter	1
2	82–0500	Adapter – Oil Filter	1
3	57–9750	Washer – Flat	2
4	NN10373	Screw – Cap Hex Hd.	2
5	92–0912	Elbow – Street 45˚	1

Ref. No.	Part No.	Description	No. Used
6	NN10824	Switch – Low Oil Pressure	1
7	NN10143	Filter – Oil	1
8	82–0680	Filter – Gasket Oil	1
9	NN10894	Drain – Oil Filter	1
10	82–1510	Screw – Cap Hex. Hd.	2

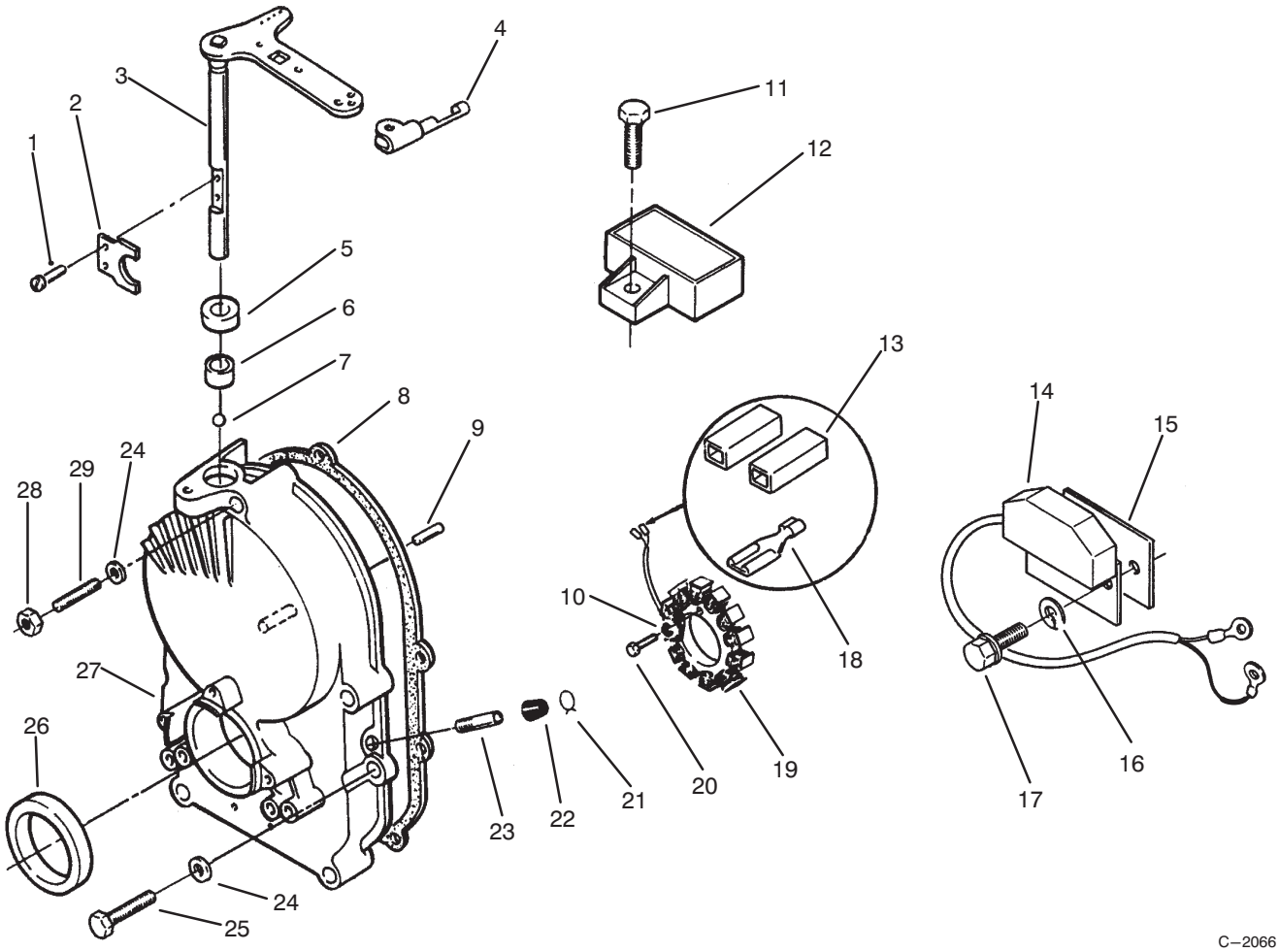

GEARCASE & IGNITION CONTROLS

Ref. No.	Part No.	Description	No. Used
1	59–0950	Screw – Mach. Pan Hd.	2
2	59–0420	Yoke – Governor Shaft	1
3	NN10826	Shaft & Arm – Governor	1
4	57–9730	Clip – Retaining, Control Rod To Governor Shaft	1
5	57–9570	Seal – Oil, Governor Shaft	1
6	57–9650	Bearing – Governor Shaft	1
7	57–9630	Bearing – Ball, Gov. Shaft	1
8	NN10895	Gasket – Gearcase Mtg.	1
9	59–0740	Pin – Dowel, Governor	1
10	3253–2	Washer – Lock	3
11	59–1080	Screw – Cap Hex. Wash. Hd.	1
12	57–9430	Regulator – Voltage 20 Amp	1
13	82–1000	Body – Terminal Conn. Kit (Incl. Ref. #18)	2
14	71–6380	Control – Ignition	1
15	71–6410	Insulator – Ignition, Module	1

Ref. No.	Part No.	Description	No. Used
16	82–1660	Washer – Int. Tooth Lock	2
17	NN10394	Screw – Hex Washer Hd.	2
18	59–0590	Terminal – Stator Leads	2
19	92–0967	Stator (Incl. Ref. #18)	1
20	82–1500	Screw – Machine, Hex Hd.	3
21	57–9550	Clamp – Vacuum Port Cap	1
22	59–0370	Cap – Vacuum Port	1
23	59–0360	Tube – Vacuum Port	1
24	57–9750	Washer – Flat	5
25	NN10545	Screw – Cap Hex. Hd.	4
26	57–9580	Seal – Oil, Crankshaft	1
27	NN10825	Kit – Gearcase (Incl. Ref. #1–3, 5–7, 9, 21–23 & 26)	1
28	59–1130	Nut – Hex.	1
29	59–0790	Stud – Gear Cover	1

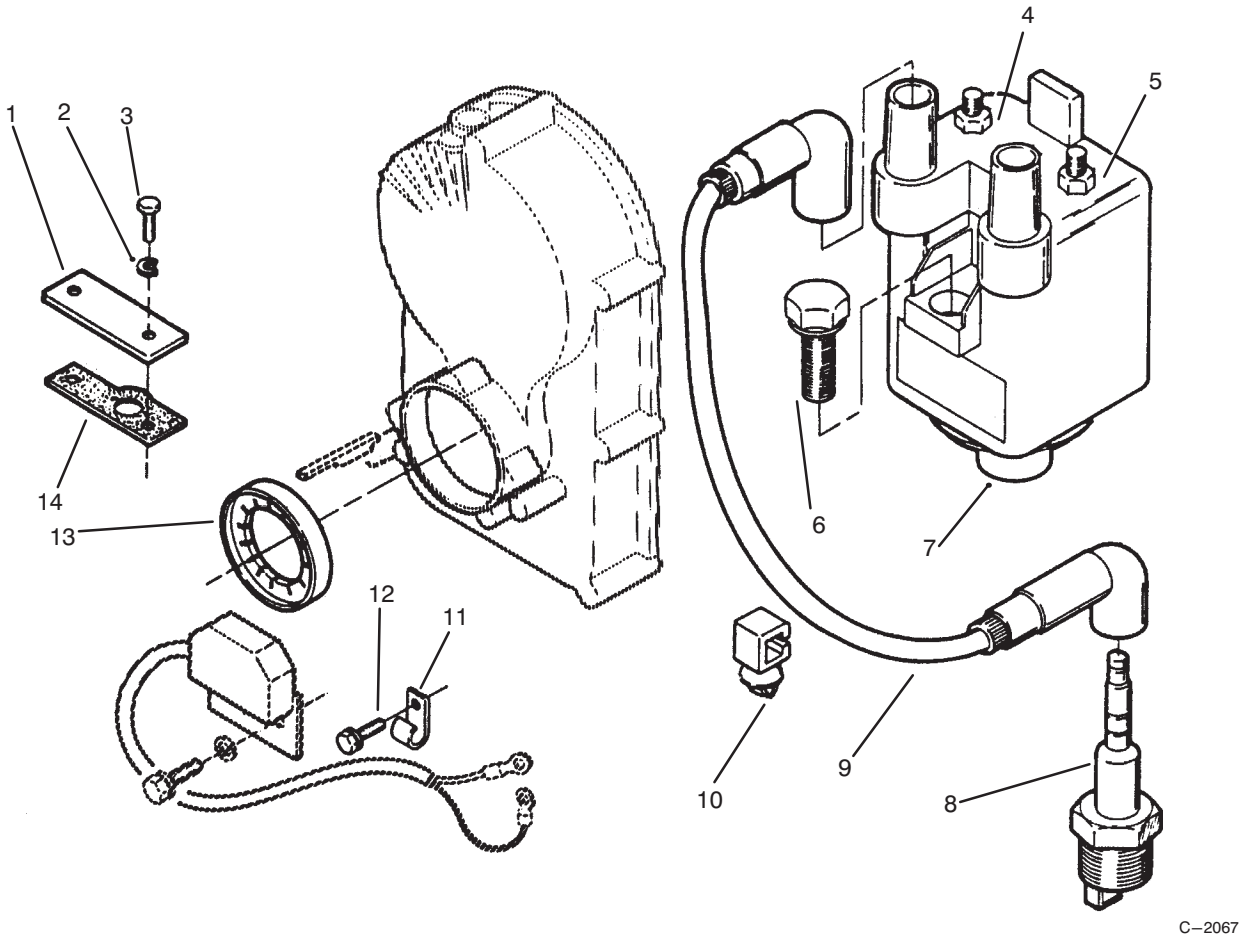

IGNITION – ELECTRONIC

Ref. No.	Part No.	Description	No. Used
1	71–5990	Cover – Plunger, Ignition	1
2	82–1340	Washer – Flat	2
3	82–1360	Screw – Cap Hex. Hd.	2
4	71–6440	Nut – Hex. Flange Hd. (Negative Terminal)	1
5	71–6430	Nut – Hex. Flange Hd. (Positive Terminal)	1
6	NN10545	Screw – Hex. Washer Hd.	2
7	71–6000	Coil – Battery Ignition (Incl. Ref. #4–5)	1

Ref. No.	Part No.	Description	No. Used
8	57–9340	Plug – Spark	2
9	NN10253	Cable – Spark Plug	2
10	71–6060	Clip – Wire (Attach To #1 Spark Plug Wire)	1
11	71–6220	Clip – Wire	2
12	71–6460	Screw – Hex Washer Hd.	1
13	71–6010	Rotor – Ignition	1
14	79–6490	Gasket – Plate	1

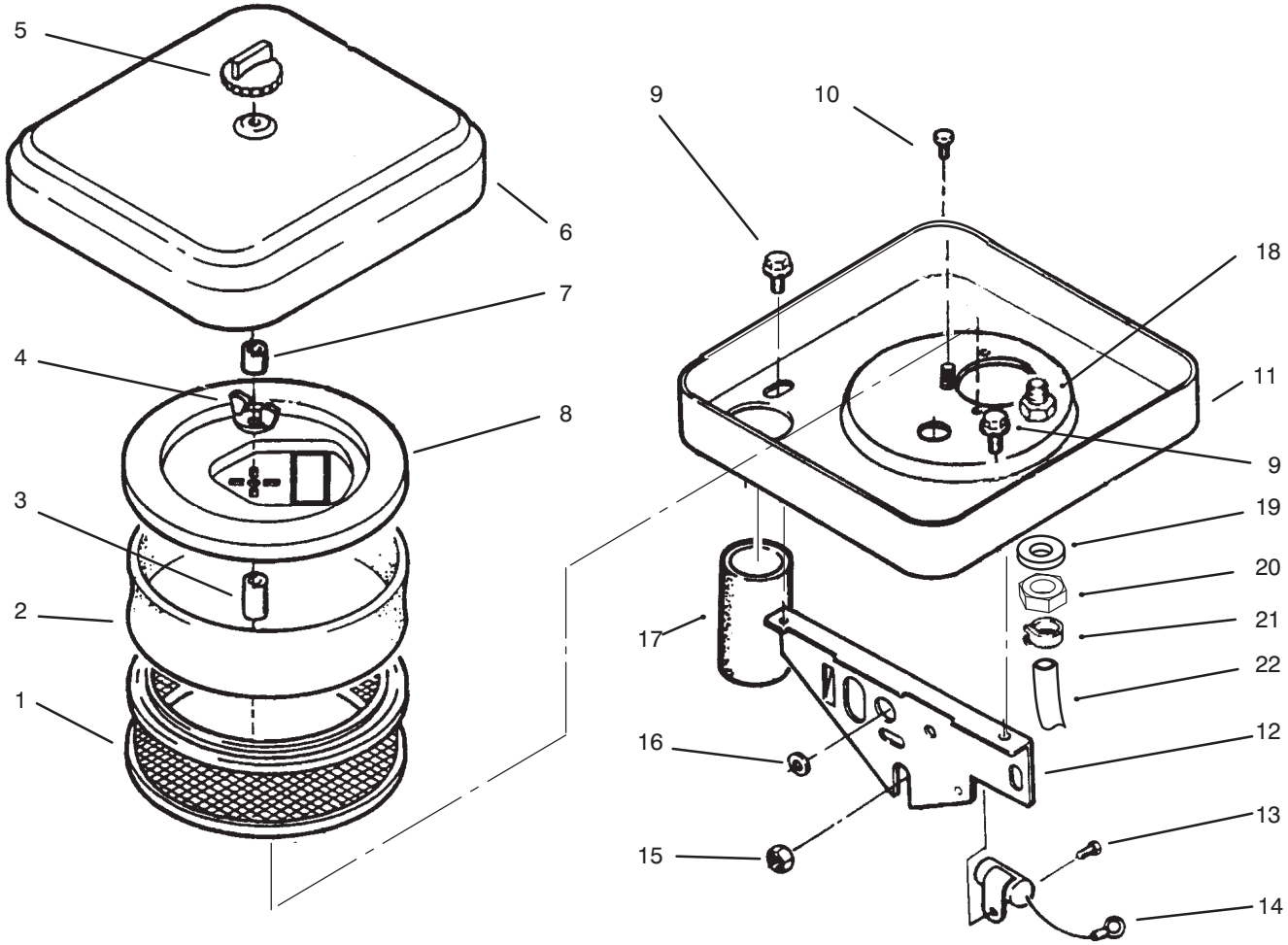

AIR CLEANER

Ref. No.	Part No.	Description	No. Used
1	NN10774	Element – Air Cleaner	1
2	NN10176	Wrapper – Element	1
3	79–6510	Spacer – Stud	1
4	92–0913	Nut – Wing	1
5	82–1670	Knob	1
6	NN10446	Cover – Air Cleaner	1
7	79–6520	Spacer – Rubber	1
8	82–0650	Cover – Element	1
9	82–1550	Screw – Hex. Washer Hd.	2
10	92–0915	Screw – Machine Hex. Hd.	2
11	79–6330	Housing – Air Cleaner	1

Ref. No.	Part No.	Description	No. Used
12	79–6340	Support – Air Cleaner	1
13	NN10390	Screw – Hex. Washer Hd.	1
14	59–1180	Capacitor	1
15	3253–5	Nut – Hex. Washer Hd.	1
16	71–6140	Grommet – Rubber	1
17	NN10187	Tube – Air Intake	1
18	NN10239	Fitting – Barbed	1
19	NN10190	Gasket	1
20	NN10132	Nut	1
21	82–1080	Clamp	1
22	NN10447	Hose	1

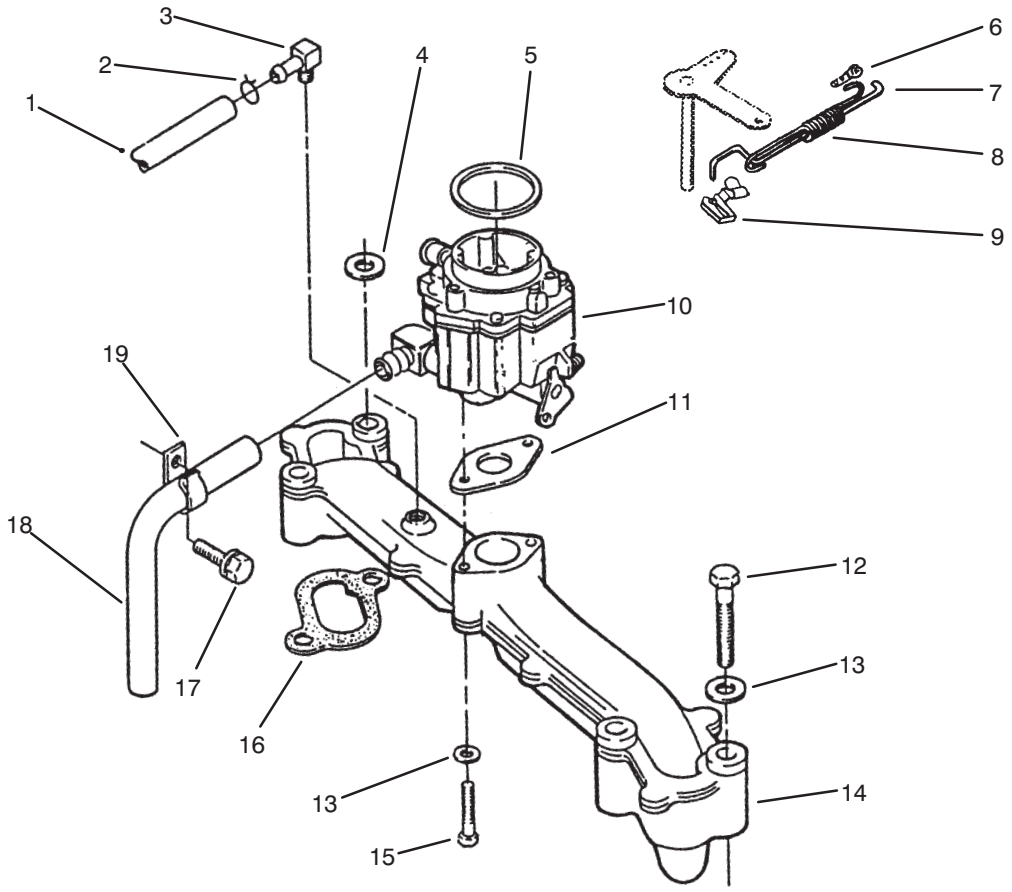

C–2069

INTAKE MANIFOLD

Ref. No.	Part No.	Description	No. Used
1	82–1120	Hose – Breather	1
2	82–1080	Clamp – Hose 1/2” Dia.	2
2	82–1090	Clamp – Hose .44” Dia.	1
3	82–1070	Fitting – Barbed	1
4	NN10362	Washer – Flat	1
5	57–9620	”O”Ring	1
6	57–9700	Clip – Retaining, Control Rod To Carburetor	1
7	NN10227	Rod – Governor Control	1
8	NN10877	Spring – Governor Rod	1
9	57–9730	Clip – Retaining	1

Ref. No.	Part No.	Description	No. Used
10	62–2790	Assembly – Carburetor (Incl. Ref. #5 & 11)	1
11	82–0850	Gasket – Carb/Manifold	1
12	NN10375	Screw – Cap Hex. Hd.	4
13	82–1350	Washer – Flat	6
14	92–0918	Manifold – Intake	1
15	NN10545	Screw – Cap Hex. Hd.	2
16	71–5980	Gasket – Manifold To Block	2
17	82–1540	Screw – Hex. Washer Hd.	1
18	NN10306	Hose – Fuel	1
19	71–6220	Clip – Wire	1

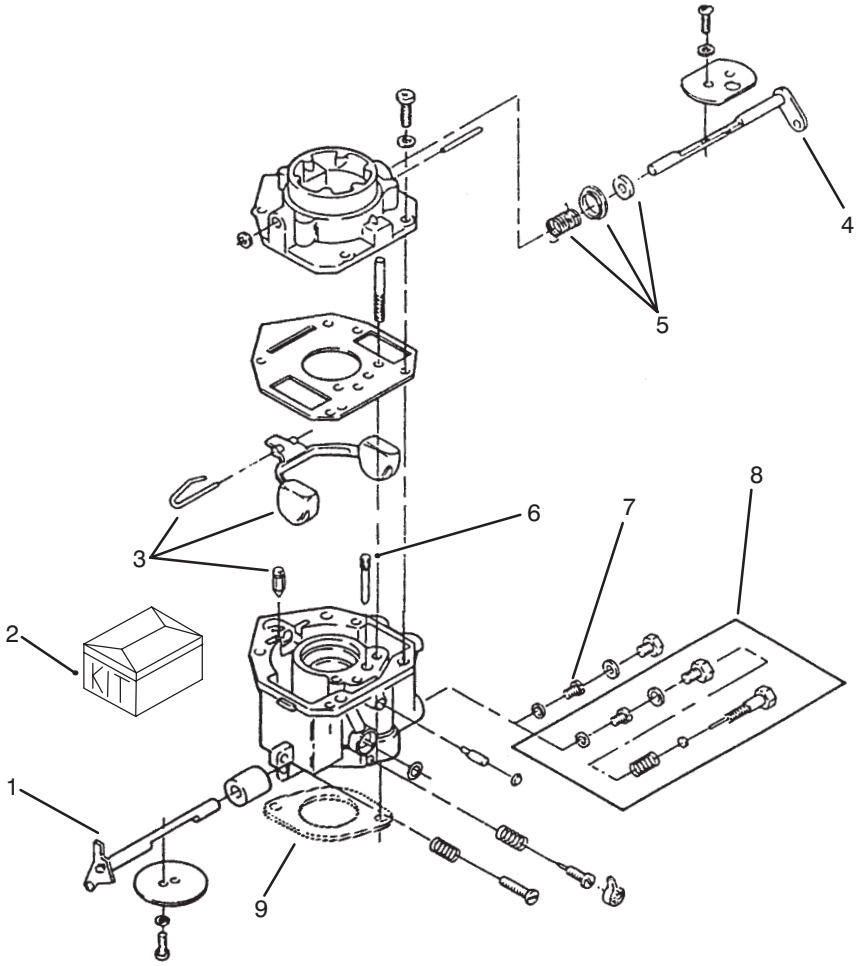

C–2070

CARBURETOR ASSEMBLY

Ref. No.	Part No.	Description	No. Used
1	NN10811	Kit – Shaft, Throttle (Includes Valve Setscrew, Air Filter, & Throttle Valve)	1
2	82–0780	Kit – Repair (Includes Screw & Plug Package, Gasket Package, Float Valve, Idle Adj. Needle & Spring, Mounting Gaskets, & Idle Limit Cap)	1
3	62–2800	Kit – Float (Includes Float, Pin & Valve)	1
4	72–3860	Kit – Shaft, Choke (Incl. Choke Valve, Valve Setscrew, & Air Filter)	1
5	72–3870	Kit – Lever, Choke (Incl. Choke Lever Ring, Choke Spring, & Choke Collar)	1
6	NN10859	Jet – Idle	1
7	57–9050	Jet – Power	1
8	NN10858	Jet – Power, Fixed, Optional (High Altitude Application)	1
9	82–0850	Gasket – Carb. Mounting	2

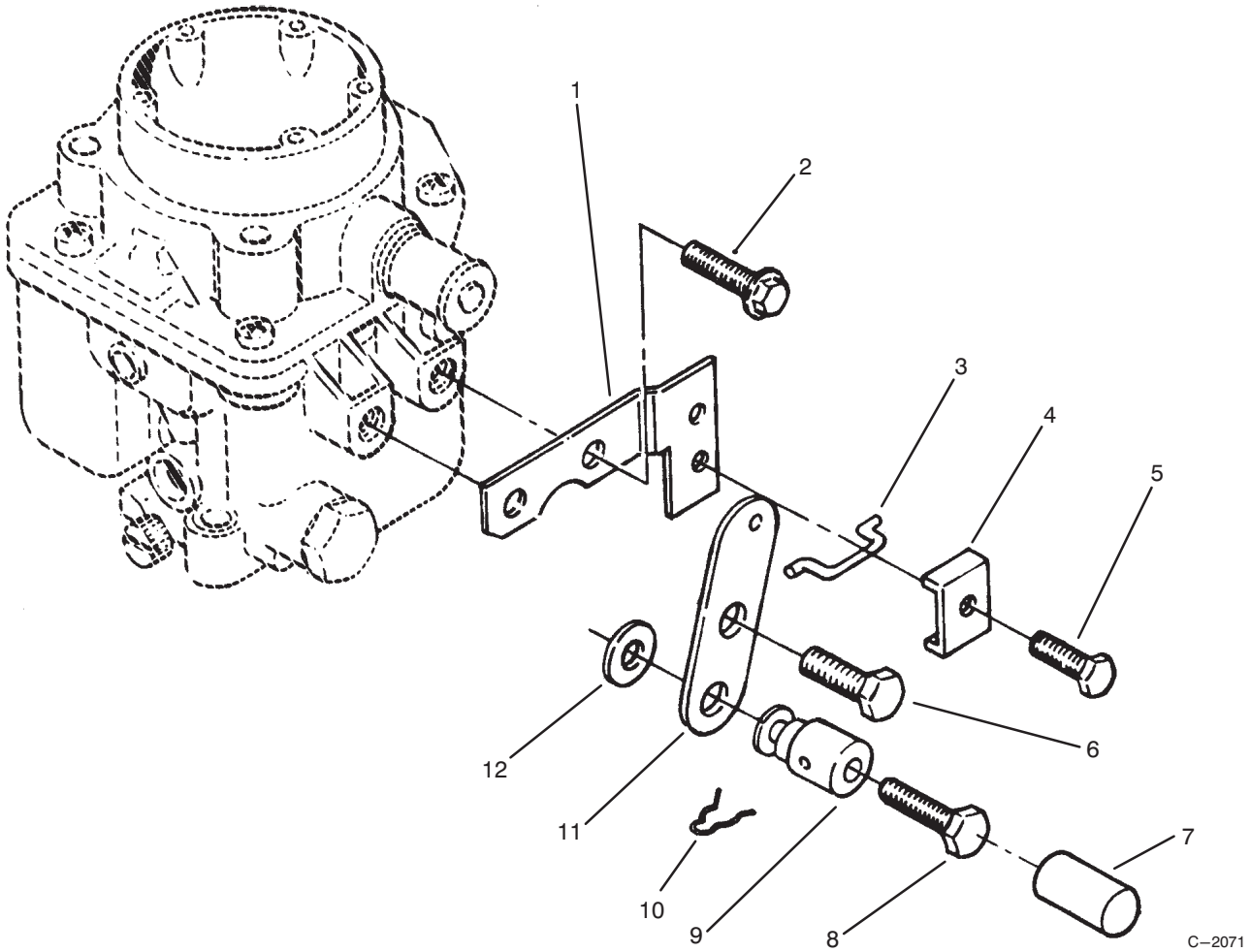

CHOKE CONTROL (FRONT PULL)

Ref. No.	Part No.	Description	No. Used
1	59–0470	Bracket – Choke Cable	1
2	72–3880	Screw – Cap Flange Hd.	1
3	57–9180	Link – Choke	1
4	57–9190	Clip – Choke Cable	1
5	72–3900	Screw – Flange Hd.	1
6	92–0916	Screw – Shoulder	1

Ref. No.	Part No.	Description	No. Used
7	NN10830	Plug – Cap	1
8	72–3890	Screw – Machine, Hex. Hd.	1
9	NN10656	Swivel – Choke Lever	1
10	59–0720	Pin – Cotter	1
11	NN10511	Lever – Choke	1
12	59–0850	Washer – Flat	1

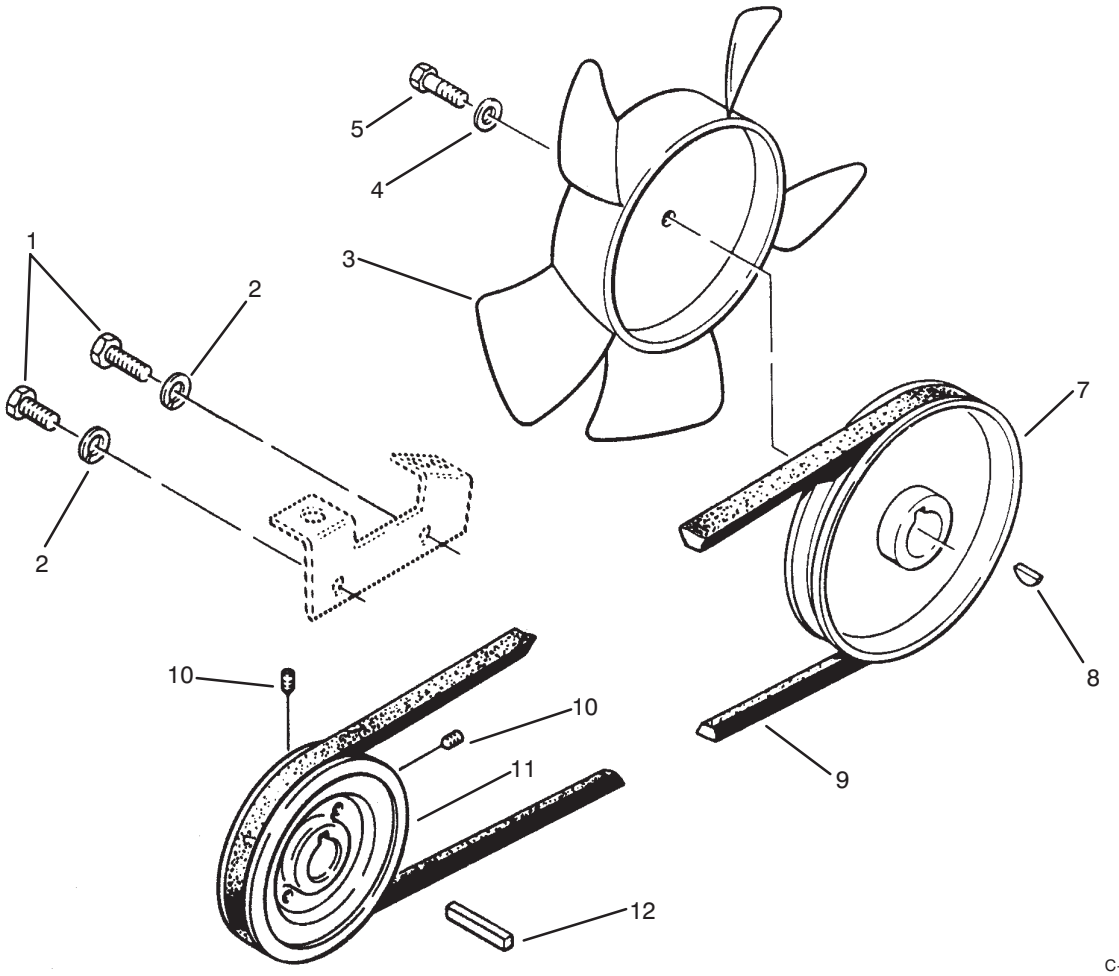

DRIVE BELT AND PULLEYS

Ref. No.	Part No.	Description	No. Used
1	323–6	Bolt	2
2	3253–21	Washer – Lock	2
3	108393	Fan	1
4	103995	Washer – Special	1
5	9080026	Bolt	1
7	108316	Pulley – Transmission Drive	1

Ref. No.	Part No.	Description	No. Used
8	937089	Key – Woodruff	1
9	114895	Belt – Drive	1
10	3246–2	Setscrew	2
11	7443	Pulley – Engine Drive	1
12	105453	Key	1

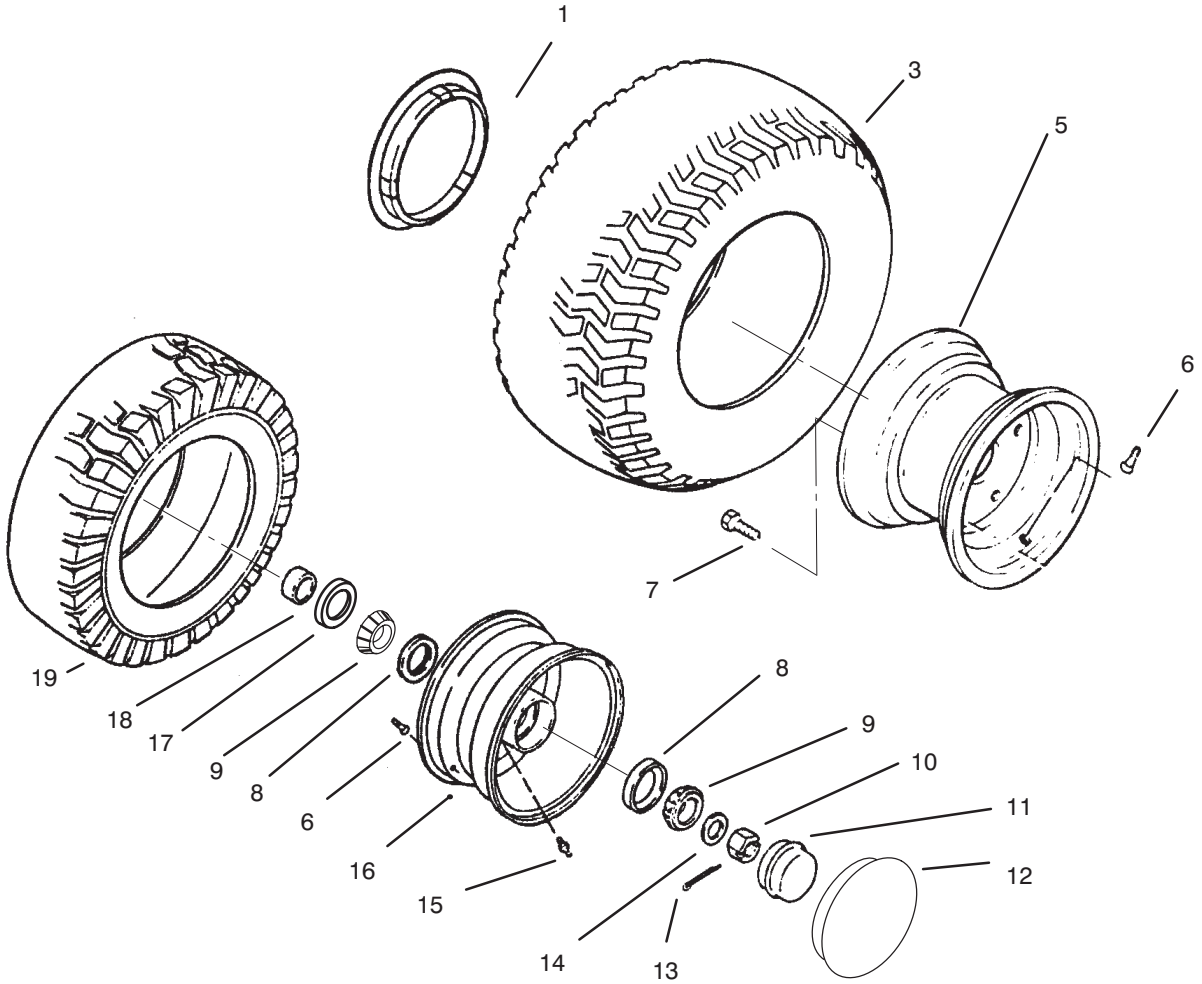

WHEELS AND TIRES

Ref. No.	Part No.	Description	No. Used
1	114428	Logo – Hub Cap 12”	2
3	116971	Tire – Turf Trac, Rear 23 X 10.5–12	2
5	110680	Wheel – Rear	2
6	5108	Stem – Valve	4
7	83–2720	Bolt – Lug	10
8	112821	Cup – Bearing	2
9	112823	Bearing	2
10	32136–5	Nut – Slotted	2
11	112825	Cap – Dust	2

Ref. No.	Part No.	Description	No. Used
12	114427	Logo – Hub Cap 8”	2
13	3272–12	Pin – Cotter	2
14	9202254	Washer	2
15	109500	Fitting – Grease	2
16	117287	Wheel – Front (Includes Item 15 & Qty. 2 of Item 8)	2
17	93–9807	Seal	2
18	112824	Spacer	2
19	116867	Tire – Turf Trac, Front 12 X 7.5–8	2

*Not Illustrated

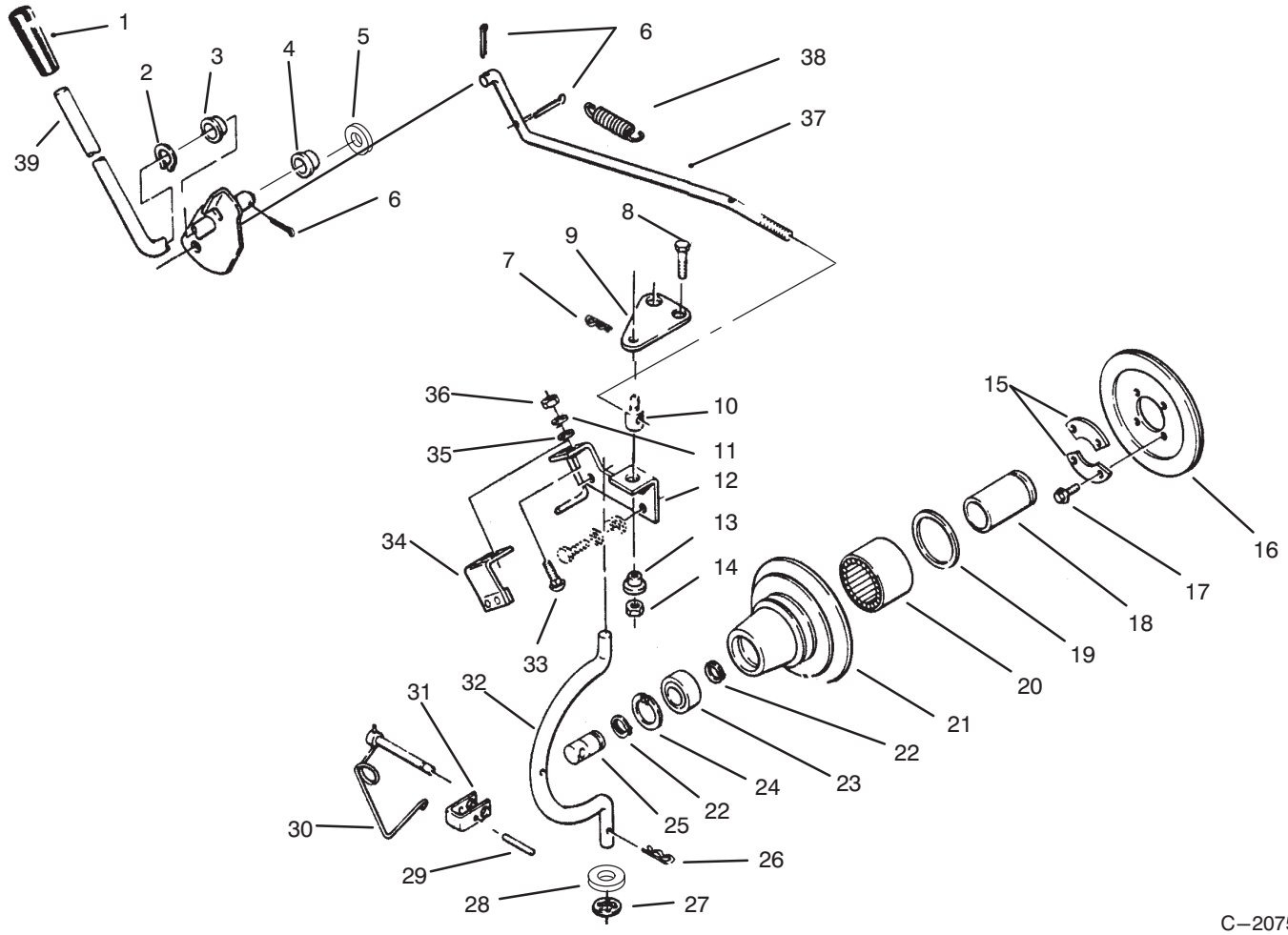

C–2075

PTO CLUTCH & CONTROL

Ref. No.	Part No.	Description	No. Used
1	9038	Grip	1
2	32151–11	Ring – Retaining	1
3	5666	Bushing – Nyliner	1
4	5983	Bushing	1
5	3765	Washer – Shim	1
6	3272–10	Pin – Cotter	3
7	9335054	Pin – Cotter, Hair	1
8	323–7	Screw – Cap Hex. Hd.	1
9	110669	Plate – PTO	1
10	110656	Trunnion	1
11	3253–3	Washer – Lock	2
12	113874	Bracket – Engine	1
13	104859	Spacer	1
14	3296–39	Nut – Lock	1
15	6659	Retainer	2
16	114881	Assembly – Plate	1
17	9080026	Bolt – Nylok	4
18	6658	Race – Bearing	1
19	6663	Seal – Oil	1
20	6662	Bearing – Needle	1

Ref. No.	Part No.	Description	No. Used
21	103478	Housing – Clutch	1
22	32120–72	Ring – Snap, External	2
23	109842	Bearing – Ball	1
24	32120–62	Ring – Snap, Internal	1
25	102872	Shaft – PTO	1
26	9335064	Pin – Cotter, Hair	1
27	106695	Ring – Push–On	1
28	3256–27	Washer – Flat	1
29	933274	Pin – Spirol	1
30	111314	Pin – Locking	1
31	113107	Clevis	1
32	113108	Rod – Housing, PTO	1
33	3229–25	Bolt – Carriage	2
34	110665	Assembly – Brake, PTO	1
35	3256–22	Washer – Flat	2
36	3218–1	Nut – Jam	2
37	111052	Rod – Clutch, PTO	1
38	103125	Spring	1
39	111234	Lever – Clutch, PTO	1

BATTERY & HEADLIGHTS ASSEMBLY

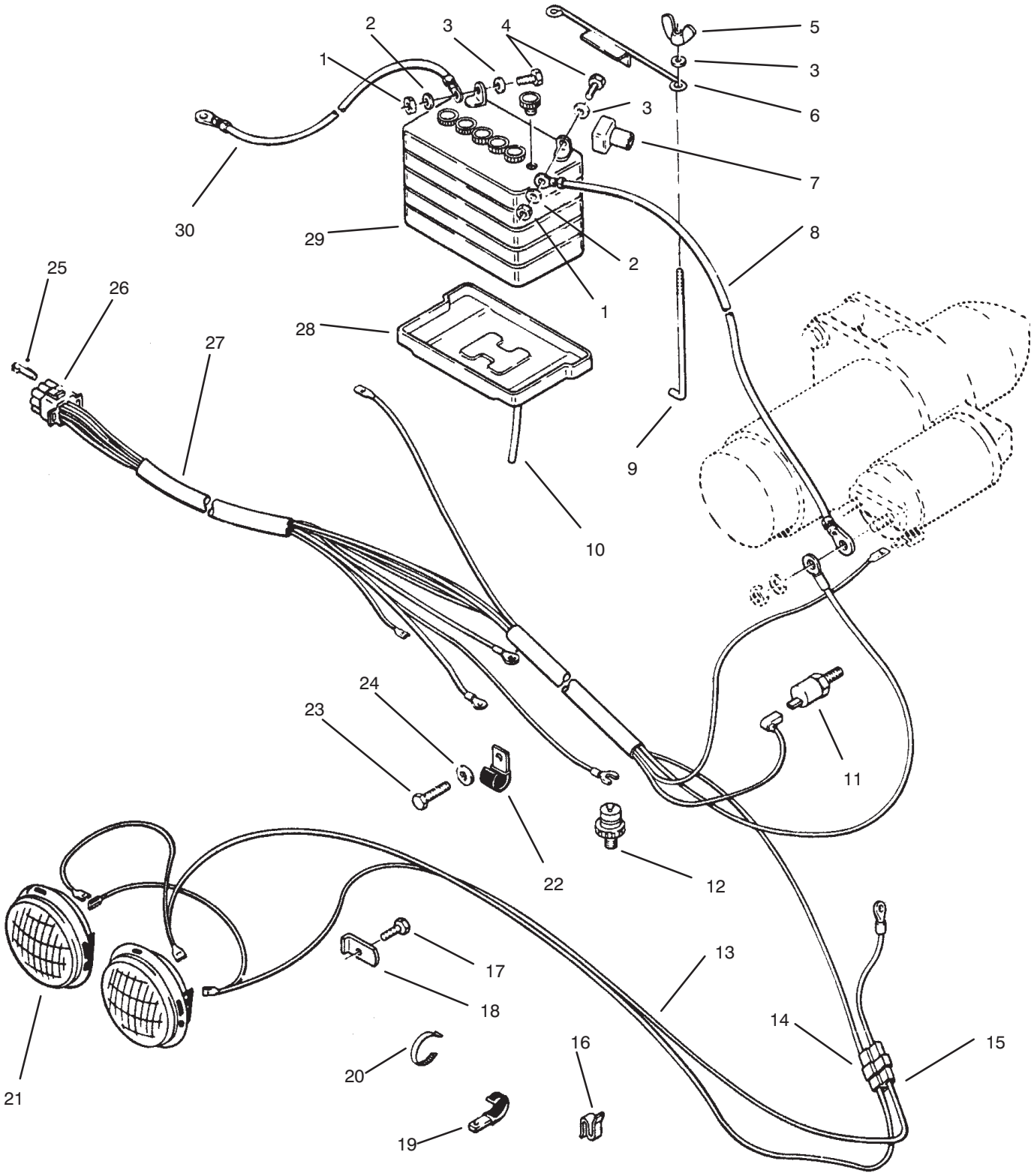

C–2076

BATTERY & HEADLIGHTS ASSEMBLY

Ref. No.	Part No.	Description	No. Used
1	3296–42	Nut – Lock	5
2	3253–3	Washer – Lock	2
3	3256–22	Washer – Flat	4
4	321–4	Screw – Cap Hex. Hd.	2
5	32103–22	Nut – Wing	2
6	113010	Rod – Battery Hold Down	1
7	109553	Cover – Terminal	1
8	113925	Cable – Battery, Pos.	1
9	113969	Hook – Battery Hold Down	2
10	114720	Tube – Drain	1
11	NN10274	Switch – High Engine Temp	1
12	NN10824	Switch – Low Oil Pressure	1
13	114052	Harness – Headlight	1
14	NN10278	Connector – Male	1
15	109357	Connector – Female	1
16	3023	Clip – Small	1
17	9266714	Bolt – Hex	2
18	109459	Clamp	2
19	8830	Clip	1
20	100571	Tie – Cable	A/R
21	102881	Headlight	2
22	71–6220	Clip	1
23	82–1540	Screw	1
24	NN10425	Washer – Int. Tooth	1
25	NN10279	Contact – Socket	1
26	NN10281	Connector – Male	1
27	NN10553	Harness – Engine Wiring	1
28	106948	Tray – Battery	1
29	115877	Battery – 280 CCA	1
30	114210	Cable – Battery, Ground	1
*	3290–378	Tie – Cable	7

*Not Illustrated

ELECTRICAL SYSTEM

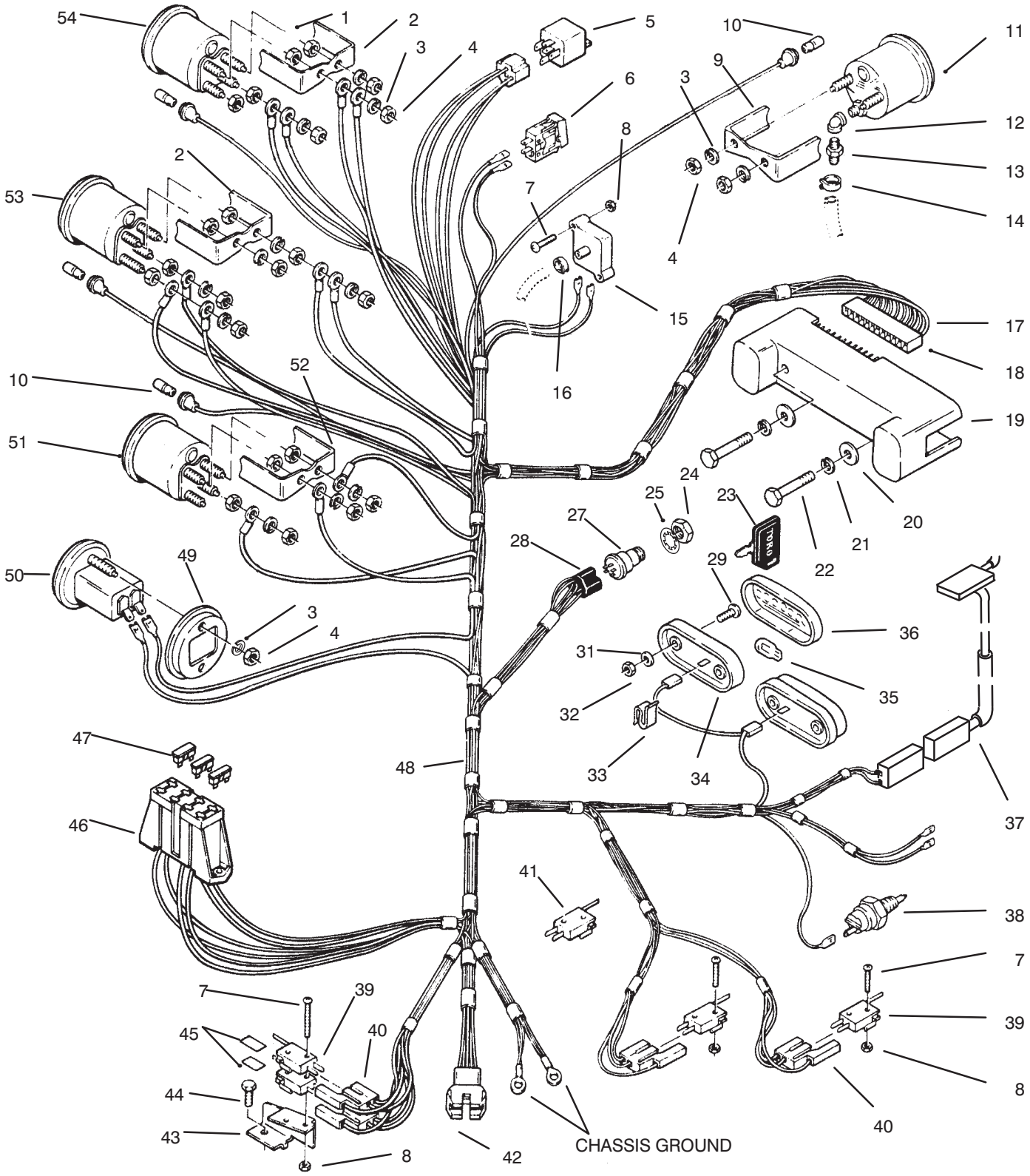

ELECTRICAL SYSTEM

Ref. No.	Part No.	Description	No. Used
2	78–0080	Bracket – Mounting	2
3	3255–25	Washer – Lock	2
4	3217–27	Nut – Hex.	A/R
5	116397	Relay	3
6	92–9844	Switch – Light	1
7	910948	Screw	4
8	915732	Nut – Elastic	6
9	78–0100	Bracket – Mounting	2
10	79–0450	Lamp – .938” Long	4
11	79–2660	Gauge – Vacuum (Incl. Ref. #3–4 & 9)	1
12	943021	Elbow	1
13	105076	Fitting – Straight	1
14	950154	Clamp – Corbin	1
15	114270	Sensor – Air Cleaner	1
16	114767	Clamp	1
17	114633	Terminal	12
18	114632	Connector – Male	1
19	79–2130	Board – Light Circuit	1
20	3256–21	Washer – Flat	2
21	3253–15	Washer – Lock	2
22	910783	Screw	2
23	62–7770	Key – Padded Ignition	2
24	101884	Nut – Special	1
25	9201604	Washer – Lock	1
27	111216	Switch – Ignition (Incl. Ref. #24–25)	1
28	105302	Connector Body – Ignition Switch (Ref. Item #48)	1
29	3250–31	Screw (Optional)	4
31	3254–1	Washer – Lock	4
32	3296–27	Nut	4
33	3023	Clip – Speed	2
34	105202	Base – Taillight w/Bulb	2
35	109045	Bulb – Light (Auto #194)	2
36	112564	Lens – Taillight	2
37	38–1420	Switch – Seat	1
38	113193	Switch – Trans. Oil Temp	1
39	111332	Switch – Interlock Snap	2
40	111498	Connector	5
41	115230	Switch – Clutch	1
42	113119	Connector – Female	1
43	111488	Support – Switch	1
44	926671	Bolt	3
45	111642	Barrier – Switch Insulator	2
46	120930	Body – Fuse (Ref. Item #48)	1
47	114594	Fuse – 10 Amp, ATO or ATC	1
	109101	Fuse – 20 Amp, ATO or ATC	1
	NN10277	Fuse – 30 Amp, ATO or ATC	1
48	79–3630	Assembly – Wire Harness	1
49	78–3320	Bracket – Mounting	1
50	78–0020	Hourmeter (Incl. Ref. #3–4 & 49)	1
51	78–0060	Tachometer (Incl. Ref. #1, 3–4 & 52)	1
52	78–0090	Bracket – Mounting	1
53	78–0040	Gauge – Fuel (Incl. Ref. #2–4)	1
54	78–0030	Voltmeter (Incl. Ref. #2–4)	1
*	117257	Tie – Snap In	1

*Not Illustrated

WIRING DIAGRAM

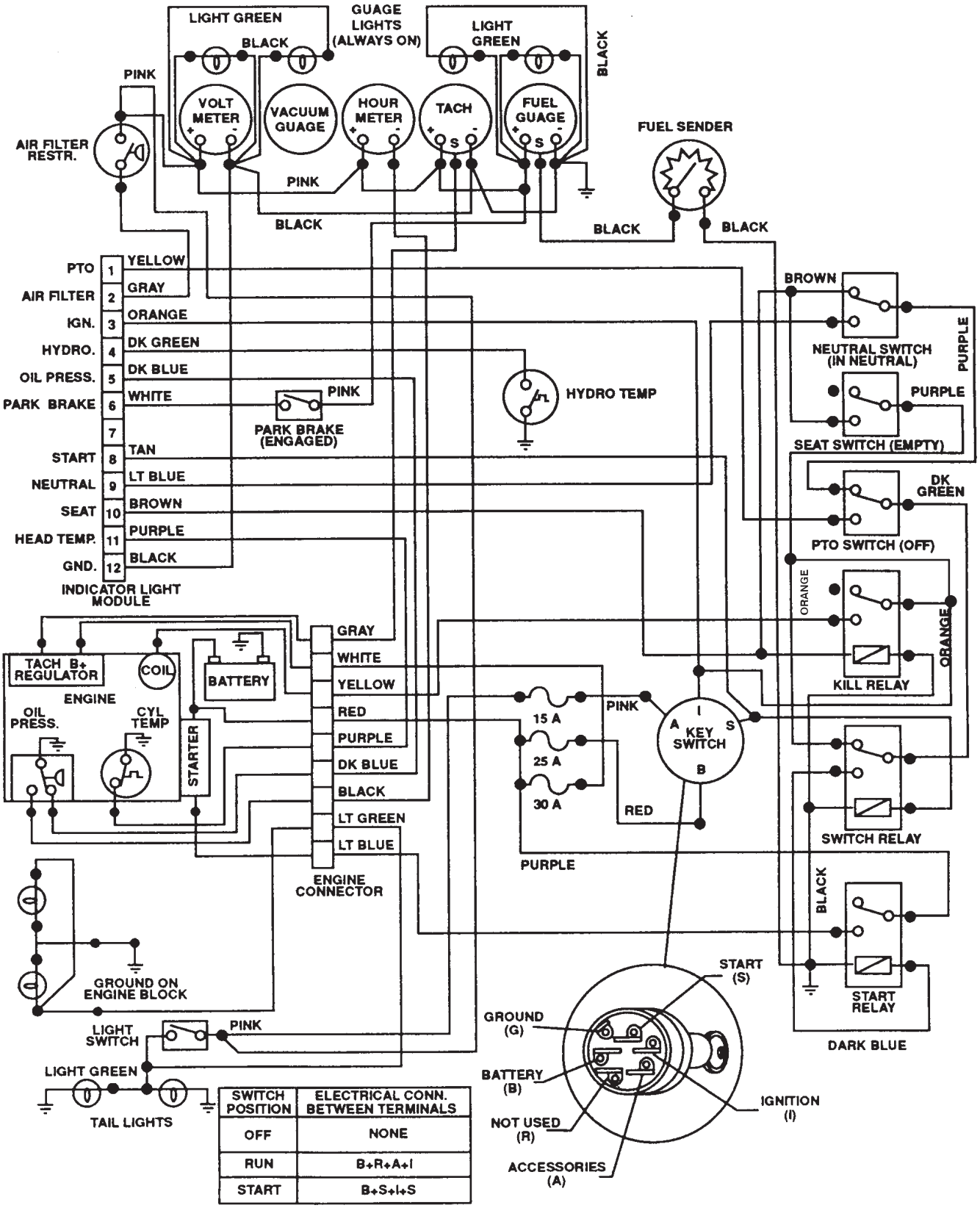

SWITCH POSITION	ELECTRICAL CONN. BETWEEN TERMINALS
OFF	NONE
RUN	B+R+A+I
START	B+S+I+S

DECALS

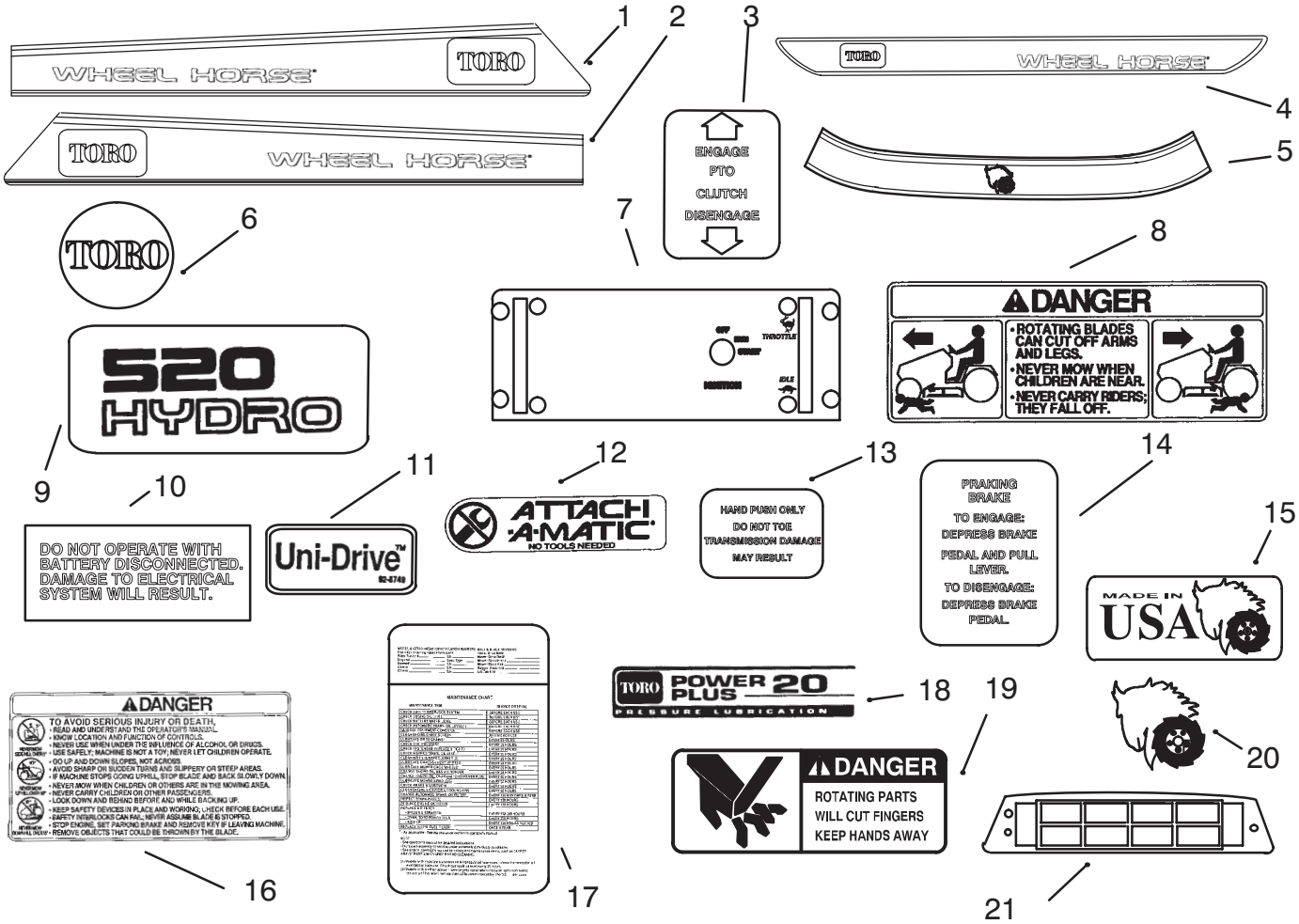

DECALS

Ref. No.	Part No.	Description	No. Used
1	92–9835	Decal – Hood RH	1
2	92–9834	Decal – Hood LH	1
3	111960	Decal – PTO Clutch	1
4	92–9827	Decal – Rear Fender	1
5	92–9826	Decal – Front Hood	1
6	118530	Plate – Toro Logo	1
7	119230	Decal – Front Panel	1
8	92–8946	Decal – Danger	1
9	92–9833	Decal – 520 Hydro	2
10	111926	Decal – Electrical System	1
11	92–8749	Decal – Unidrive	1

Ref. No.	Part No.	Description	No. Used
12	92–8747	Decal – Attach–A–Matic	1
13	116446	Decal – Do Not Tow	1
14	116445	Decal – Parking Brake	1
15	76–1340	Decal – Made in U.S.A.	1
16	92–9838	Decal – Danger	1
17	88–3200	Decal – Maintenance	1
18	118560	Decal – Power Plus	1
19	88–2790	Decal – Danger	1
20	92–9836	Plate – Wheel Horse Logo	1
21	78–8350	Decal – Indicator Lights	1

TORO PART NUMBER INDEX

Part No.	Description	Pg. No.	Ref. No.	Qty.
1121	Key – Sq.	”9”	13	1
1278	Washer – Shim	”12”	25	1
1481	Fitting – Grease, 45˚	”18”	21	2
1518	Bearing – Needle	”11”	32	1
1532	Bearing – Needle	”10”	21	2
1532	Bearing – Needle	”11”	31	2
1538	Bearing – Needle	”11”	20	1
1644	Hitch – Drawbar	”21”	9	1
2844	Special Washer	”12”	14	1
3023	Clip – Small	”43”	16	1
3023	Clip – Speed	”45”	33	2
3765	Washer – Shim	”41”	5	1
3765	Washer – Shim	”14”	44	1
5108	Stem – Valve	”40”	6	4
5210	Washer – Shim	”18”	18	6
5618	Ring – Retaining	”21”	3	2
5618	Ring – Retaining	”19”	47	1
5666	Bushing – Nyliner	”41”	3	1
5979	Bushing	”2”	8	2
5983	Bushing	”41”	4	1
5983	Bushing	”8”	6	1
5983	Bushing	”14”	36	3
5991	Fitting – Filter	”15”	25	1
6216	Pin & Plate	”18”	2	1
6229	Bearing	”9”	17	1
6449	Axle – Seal	”10”	6	1
6449	Axle – Seal	”11”	12	1
6472	Bearing – Flanged	”18”	3	1
6658	Race – Bearing	”41”	18	1
6659	Retainer	”41”	15	2
6662	Bearing – Needle	”41”	20	1
6663	Seal – Oil	”41”	19	1
7443	Pulley – Engine Drive	”39”	11	1
7456	Bracket	”5”	13	4
7879	Bushing	”14”	43	1
7956	Washer – Thrust	”11”	25	1
8616	Spring	”20”	1	2
8830	”J”Clip	”4”	19	1
8830	”J”Clip	”15”	22	1
8830	”J”Clip	”3”	22	1
8830	Clip	”23”	6	1
8830	Clip	”20”	8	1
8830	Clip	”43”	19	1
9038	Grip	”41”	1	1
9038	Grip	”20”	10	1
9416	Bearing – Needle	”10”	7	1
9416	Bearing – Needle	”11”	11	1
9547	Washer – Thrust	”11”	33	1
9548	Washer – Thrust	”19”	44	4
9865	Bearing – Thrust	”19”	45	2
100304	Spacer	”13”	12	2
100305	Washer – Friction	”15”	10	2
100309	Bushing – Pivot, Cam	”15”	12	1
100365	Washer – Spring, Disc	”15”	9	2
100571	Tie – Cable	”8”	*	1
100571	Tie – Cable	”43”	20	A/R
100656	Bearing – Cam	”13”	19	1
101017	Lock	”20”	16	1
101623	Gear – Differential Pinion	”10”	17	8
101699	Kit – Service, Cylinder	”8”	24	1
101707	Lock	”20”	19	1
101711	Housing – Front Hitch	”20”	14	1
101750	Rod	”20”	17	1
101751	Rod – Front Hitch Lock	”20”	3	1
101757	Spacer	”8”	28	1
101850	Rod – Hood Stop	”2”	13	1
101884	Nut – Special	”45”	24	1
101889	Gear – Differential Axle	”10”	15	2
101938	Spring	”14”	49	1
102025	Spacer	”13”	24	1
102374	Pin – Pivot	”9”	15	1
102628	Fitting – Hyd., Straight	”15”	28	1
102628	Fitting – Straight Adapter	”8”	19	1
102644	Plate – Mid Hitch	”20”	7	2
102809	Nut – Special, Flanged	”13”	21	1
102872	Shaft – PTO	”41”	25	1
102881	Headlight	”43”	21	2
103125	Spring	”41”	38	1
103125	Spring – Brake Return	”12”	6	1
103478	Housing – Clutch	”41”	21	1
103995	Washer – Special	”15”	2	1
103995	Washer – Special	”39”	4	1
104047	Bushing – Rubber	”7”	19	1
104048	Valve – Fuel Shut–Off	”7”	20	1
104841	Spring	”8”	16	1
104859	Spacer	”41”	13	1
105061	Gear – Differential Ring	”10”	18	1
105076	Fitting – Straight	”45”	13	1
105202	Base – Taillight w/Bulb	”45”	34	2
105269	Shaft – Drawbar Hitch	”21”	4	1
105302	Connector Body – Ignition	”45”	28	1
105316	Cap – Lock Rod	”20”	12	2
105453	Key	”39”	12	1
105490	Clamp	”7”	18	1
105503	Bushing	”6”	11	2
105524	Bracket – Pivot	”6”	14	2
105763	Hub – Rear	”10”	1	1
105763	Hub – Rear	”11”	18	1
105797	Ring – Retaining	”20”	2	8
105797	Ring – Retaining	”2”	9	2
105876	Ring – Retaining	”10”	16	2
106222	Footrest – RH	”5”	15	1
106223	Footrest – LH	”5”	11	1
106236	Support – RH, Fuel Tank	”6”	29	1
106267	Grommet – Rubber	”8”	30	1
106269	Bearing – Flanged	”9”	8	2
106448	Tube – Filler	”10”	9	1
106522	Chain – Lift	”9”	4	1
106634	Pin – Hitch	”21”	6	1
106661	Cam – Eccentric	”15”	18	1
106695	Ring – Push–On	”41”	27	1
106719	Drum – Brake	”12”	13	1
106826	Washer – Thrust	”10”	4	1
106826	Washer – Thrust	”11”	15	1
106948	Tray – Battery	”43”	28	1
107069	Clip	”5”	14	2
107069	Nut – Speed	”4”	15	5
107374	Washer – Special	”11”	4	4
107938	Spring	”14”	41	1
108312	Gasket – Case	”11”	8	1
108316	Pulley – Transmission Drive	”39”	7	1
108316	Pulley – Transmission Drive	”15”	38	1
108319	Gasket – Pump	”15”	34	1
108323	Base – Filter	”15”	26	1
108325	Arm – Control, Speed	”15”	15	1
108326	Spacer – Pivot, Long	”15”	8	1

*Not Illustrated

TORO PART NUMBER INDEX (Cont.)

Part No.	Description	Pg. No.	Ref. No.	Qty.
108327	Spacer – Pivot, Short	”15”	39	1
108329	Plate, Control	”15”	5	1
108333	Plate – Control, Speed	”15”	11	1
108357	Seal – Oil	”11”	19	1
108361	Axle – Rear, LH Short	”11”	1	1
108362	Axle – Rear, RH Long	”10”	5	1
108363	Pin – Dowel	”11”	28	2
108364	Fitting – Hyd., Straight	”15”	36	1
108365	Fitting – Hydraulic 90°	”15”	33	2
108366	Spacer – Drive, Gear	”15”	32	1
108368	Assembly – Pump & Motor	”15”	35	1
108393	Fan	”15”	3	1
108393	Fan	”39”	3	1
108457	Nut – Push On	”4”	2	1
108457	Nut – Push On	”5”	18	1
108464	Support – LH, Fuel Tank	”6”	27	1
108496	Rod – Pivot	”14”	34	1
108680	Spring	”12”	11	1
108716	Plate – Cam	”13”	31	1
108717	Spacer	”13”	30	1
108881	Nut	”10”	12	4
108881	Nut	”15”	13	2
108898	Clamp – Corbin	”7”	15	2
108904	Rod Control	”13”	14	1
109045	Bulb – Light (Auto #194)	”45”	35	2
109081	Kit – Service, Valve	”8”	*	1
109088	Kit – Service, Cylinder	”8”	25	1
109101	Fuse – 20 Amp, ATO or ATC	”45”		1
109189	Flange – Bearing	”18”	17	1
109356	Bushing	”12”	19	1
109357	Connector – Female	”43”	15	1
109367	Bracket – Brake	”11”	23	1
109370	Shaft	”11”	26	1
109371	Band – Brake	”12”	17	1
109372	Rod – Brake, Front	”12”	7	1
109459	Clamp	”43”	18	2
109494	Bezel – Headlight RH	”2”	20	1
109495	Bezel – Headlight LH	”2”	19	1
109500	Fitting – Grease	”40”	15	2
109553	Cover – Terminal	”43”	7	1
109554	Bracket – Support, Guard	”5”	6	1
109703	Gear	”11”	34	1
109742	Gear 20 Tooth	”11”	30	1
109751	Gear – 20 Teeth	”15”	31	1
109752	Gear 46 Tooth	”11”	29	1
109842	Bearing – Ball	”41”	23	1
109989	Spacer – Nylon	”6”	37	4
110124	Hose – Valve To Cylinder	”8”	29	1
110125	Hose – Valve To Cylinder	”8”	18	1
110189	Rod End Asm	”13”	13	2
110521	Line – Fuel 53”	”7”	21	1
110634	Pad – Footrest R.H.	”5”	*	1
110635	Pad – Footrest L.H.	”5”	16	1
110656	Trunnion	”41”	10	1
110665	Assembly – Brake, PTO	”41”	34	1
110669	Plate – PTO	”41”	9	1
110680	Wheel – Rear	”40”	5	2
110768	Dipstick	”10”	10	1
110960	Fender	”6”	25	1
111052	Rod – Clutch, PTO	”41”	37	1
111071	Bumper	”6”	17	2
111196	Cap – Differential End	”11”	2	1
111196	Cap – Differential End	”10”	13	1
111199	Bearing – Ball	”11”	3	1
111199	Bearing – Ball	”10”	19	1
111201	Case – Transaxle, LH	”11”	7	1
111217	Tube – Suction	”15”	37	1
111234	Lever – Clutch, PTO	”41”	39	1
111314	Pin – Locking	”41”	30	1
111332	Switch – Interlock Snap	”45”	39	2
111383	Collar	”12”	3	1
111488	Support – Switch	”45”	43	1
111498	Connector	”45”	40	5
111642	Barrier – Switch Insulator	”45”	45	2
111926	Decal – Electrical System	”47”	10	1
111960	Decal – PTO Clutch	”47”	3	1
111960	Decal – PTO Clutch	”3”	12	1
112564	Lens – Taillight	”45”	36	2
112595	Button	”17”	10	2
112600	Ring – Retaining	”17”	53	2
112604	Seal	”17”	3	2
112608	Pin – Coil	”17”	21	1
112610	Ball	”17”	24	2
112611	Ring – Retaining	”17”	23	2
112613	Plug – ”O”Ring	”17”	48	1
112614	”O”Ring	”17”	49	1
112616	Screw	”17”	33	4
112616	Screw	”17”	54	2
112635	Screw	”17”	1	1
112636	Bearing – Input	”17”	2	1
112637	Housing – Pump Assembly	”17”	4	1
112638	Ring – Seal	”17”	6	1
112639	Plate	”17”	7	1
112640	Ring – Seal	”17”	8	1
112641	Cover Assembly	”17”	9	1
112642	Pin	”17”	12	1
112643	Shaft – Input	”17”	13	1
112644	Ring – Seal	”17”	14	1
112645	Rotor – Pump	”17”	15	1
112646	Pintle Assembly	”17”	22	1
112647	Body – Check Valve	”17”	25	2
112648	Ball	”17”	26	1
112649	Spring – Relief Valve	”17”	27	1
112650	Plug – Relief Valve	”17”	28	1
112651	Pin	”17”	29	1
112652	Shield	”17”	30	1
112653	Ring – Retaining	”17”	31	1
112654	Ring – Retaining	”17”	5	2
112654	Ring – Retaining	”17”	32	2
112656	Roller	”17”	34	6
112657	Carrier	”17”	35	1
112658	Seal	”17”	36	1
112659	Kit – Control Shaft	”17”	37	1
112660	Insert – Cam Ring	”17”	40	1
112661	Spring – Acc. Valve	”17”	41	1
112661	Spring – Acc. Valve	”17”	42	1
112662	Body – Acc. Valve	”17”	43	2
112663	Ball	”17”	44	2
112664	Rotor – Motor	”17”	45	1
112665	Shaft – Output	”17”	46	1
112666	Bearing – Output	”17”	52	1
112667	Kit – Seal, Overhaul	”17”	55	1
112668	Ring – Cam	”17”	56	1
112669	Body Assembly	”17”	50	1
112764	Spindle – Front, RH	”19”	41	1
112765	Spindle – Front, LH	”19”	*	1

*Not Illustrated

TORO PART NUMBER INDEX (Cont.)

Part No.	Description	Pg. No.	Ref. No.	Qty.
112771	Tie Rod End – Thread LH	”19”	40	2
112772	Tie Rod End – Thread RH	”19”	35	2
112773	Tube	”19”	37	2
112775	Nut – Thread LH	”19”	38	2
112791	Pulley – Idler	”14”	39	1
112821	Cup – Bearing	”40”	8	2
112822	Seal	”40”	17	2
112823	Bearing	”40”	9	2
112824	Spacer	”40”	18	2
112825	Cap – Dust	”40”	11	2
113010	Rod – Battery Hold Down	”43”	6	1
113023	Bracket – Fender	”5”	9	1
113041	Piston	”17”	18	2
113107	Clevis	”41”	31	1
113108	Rod – Housing, PTO	”41”	32	1
113119	Connector – Female	”45”	42	1
113136	Race – Pump	”17”	16	1
113137	Race – Motor	”17”	47	1
113191	Switch – Light	”45”	6	1
113193	Switch – Trans. Oil Temp	”45”	38	1
113358	Sender – Fuel Level	”7”	5	1
113372	Gasket	”7”	4	1
113454	Control – Cam	”13”	11	1
113874	Bracket – Engine	”41”	12	1
113925	Cable – Battery, Pos.	”43”	8	1
113932	Stiffener – Panel	”3”	15	1
113962	Panel – RH	”3”	1	1
113969	Hook – Battery Hold Down	”43”	9	2
114012	Tank – Fuel	”7”	3	1
114027	Control – Choke	”3”	31	1
114052	Harness – Headlight	”43”	13	1
114210	Cable – Battery, Ground	”43”	30	1
114215	Cover – Exhaust, Front	”23”	20	1
114216	Cover – Exhaust, Rear	”23”	4	1
114217	Deflector – Air	”23”	1	1
114263	Spring – Seat	”6”	35	2
114264	Adjuster – LH (With Latch)	”6”	36	1
114265	Slide – RH	”6”	39	1
114270	Sensor – Air Cleaner	”45”	15	1
114343	Spring – Gas	”6”	21	1
114344	Spacer	”6”	22	2
114345	Bracket – Gas Spring	”6”	23	1
114427	Logo – Hub Cap 8”	”40”	12	2
114594	Fuse – 10 Amp, ATO or ATC	”45”	”47	1
114628	Bracket – Switch	”3”	17	1
114632	Connector – Male	”45”	18	1
114633	Terminal	”45”	17	12
114636	Nipple	”23”	11	1
114641	Stop – Choke	”3”	14	1
114709	Hood	”2”	3	1
114720	Tube – Drain	”43”	10	1
114763	Pipe	”23”	9	1
114764	Elbow 90°	”23”	8	1
114767	Clamp	”45”	16	1
114823	Washer – Wave	”14”	45	2
114881	Assembly – Plate	”41”	16	1
114888	Screw	”23”	2	6
114895	Belt – Drive	”39”	9	1
115230	Switch – Clutch	”45”	41	1
115392	Control – Throttle	”3”	30	1
115620	Cover – Console, 5–Gage	”3”	9	1
115783	Shield – Muffler	”23”	23	1
115877	Battery – 280 CCA	”43”	29	1
116000	Bolt – Carriage	”4”	1	4
116000	Bolt – Carriage	”5”	12	4
116302	Arm – Control	”8”	8	1
116305	Bracket – Control Rod	”8”	11	1
116309	Bracket – Support, Battery	”4”	7	1
116321	Arm – Control	”14”	51	1
116324	Rod Assembly	”14”	52	1
116397	Relay	”45”	5	3
116407	Rod End	”13”	9	2
116445	Decal – Brake, Parking	”4”	12	1
116445	Decal – Parking Brake	”47”	14	1
116446	Decal – Do Not Tow	”47”	13	1
116446	Decal – Do Not Tow	”6”	30	1
116471	Muffler	”23”	5	1
116609	Plate – Engine	”23”	15	1
116634	Knob – Hydraulic Lift	”8”	13	1
116635	Knob – Motion Control	”13”	1	1
116745	Rod – Pivot	”2”	12	1
116746	Bracket – RH	”2”	7	1
116747	Bracket – LH	”2”	10	1
116823	Axle – Front	”19”	43	1
116867	Tire – Turf Trac, Front	”40”	19	2
116971	Tire – Turf Trac, Rear	”40”	3	2
117191	Bracket – Holder, Fuse	”4”	4	1
117257	Tie – Snap In	”45”	*	1
117267	Panel – Dash	”3”	7	1
117287	Wheel – Front	”40”	16	2
117328	Rod – Lift Control	”8”	9	1
117343	Keeper – Latch	”3”	19	2
117344	Latch – Hood	”2”	6	2
117432	Rivet – Pop	”2”	5	4
117433	Rivet – RS Pop	”3”	20	4
117930	Latch – Mid Hitch	”20”	13	1
118410	Cover – Steering	”3”	8	1
118530	Plate – Toro Logo	”25”	41	1
118530	Plate – Toro Logo	”47”	6	1
118560	Decal – Power Plus	”47”	18	1
118660	Guide – Control	”13”	4	1
118780	Screw – Plastite	”3”	11	4
119230	Decal – Front Panel	”47”	7	1
119340	Cylinder – Hydraulic	”8”	26	1
120400	Bar – Lift	”9”	20	1
120930	Body – Fuse	”45”	46	1
121100	Lever – Lift	”9”	11	1
128860	Knob	”13”	26	1
201256	Link – Governor Control	”25”	24	1
201327	Screw	”25”	29	3
518211	Bumper	”5”	10	2
900036	Bolt	”3”	24	2
910783	Screw	”45”	22	2
910807	Screw	”7”	6	5
910837	Screw	”5”	17	1
910837	Screw – Black	”3”	5	8
910837	Screw – Black	”4”	9	3
910839	Screw	”3”	3	6
910839	Screw	”4”	11	2
910948	Screw	”45”	7	4
911423	Bolt	”11”	5	4
915031	Nut	”19”	30	4
915032	Nut	”18”	6	1
915732	Nut – Elastic	”45”	8	6
915740	Nut	”4”	6	2
920242	Spacer	”19”	31	4

*Not Illustrated

TORO PART NUMBER INDEX (Cont.)

Part No.	Description	Pg. No.	Ref. No.	Qty.
926671	Bolt	”45”	44	3
926671	Screw – Cap Hex. Hd.	”5”	4	1
926694	Bolt	”5”	3	2
926694	Bolt	”14”	33	1
926694	Screw – Cap Hex. Hd.	”4”	13	14
926794	Bolt	”7”	2	2
933135	Pin – Spirol	”13”	23	1
933198	Pin – Spirol	”13”	3	1
933198	Pin – Spirol	”8”	7	1
933274	Pin – Spirol	”41”	29	1
933504	Pin – Cotter	”12”	27	1
933505	Hairpin – Cotter	”21”	8	1
937089	Key – Hi–Pro	”15”	7	1
937089	Key – Woodruff	”39”	8	1
937099	Key – Woodruff	”11”	27	1
937108	Key – Woodruff	”11”	14	1
937108	Key – Woodruff	”10”	22	1
943021	Elbow	”45”	12	1
950154	Clamp – Corbin	”45”	14	1
973310	”O”Ring	”8”	17	4
973370	”O”Ring	”15”	*	1
973370	”O”Ring	”8”	20	4
979120	Spacer	”21”	5	2
9080026	Bolt	”15”	1	1
9080026	Bolt	”39”	5	1
9080026	Bolt – Nylok	”41”	17	4
9080196	Screw – Cap Hex. Hd.	”15”	19	1
9080356	Bolt	”11”	6	1
9080376	Bolt	”18”	27	2
9080406	Bolt	”11”	10	1
9080406	Screw – Cap Hex. Hd.	”15”	6	1
9107922	Screw	”3”	28	4
9108652	Screw	”6”	38	4
9114584	Bolt	”13”	18	2
9157404	Nut – Lock	”3”	27	4
9201604	Washer – Lock	”45”	25	1
9202164	Washer	”18”	24	1
9202254	Washer	”40”	14	2
9202324	Washer	”8”	27	1
9202414	Washer	”13”	25	1
9202624	Washer	”18”	9	1
9266714	Bolt – Hex	”43”	17	2
9266944	Bolt – Flange	”6”	18	2
9266944	Screw – Hex. Hd.	”6”	13	4
9321204	Pin – Clevis	”8”	3	1
9329974	Pin – Clevis	”8”	23	1
9335054	Pin – Cotter	”9”	2	1
9335054	Pin – Cotter	”9”	7	1
9335054	Pin – Cotter, Hair	”41”	7	1
9335064	Pin – Cotter, Hair	”41”	26	1
9335074	Pin – Cotter	”9”	12	2
111216	Switch – Ignition	”45”	27	1
12–3270	Screw – Hex. Hd.	”23”	3	3
NN10082	Lock – Valve Spring	”27”	8	8
NN10125	Standard	”27”	43	2
NN10126	.010” Undersize	”27”	43	2
NN10127	.020” Undersize	”27”	43	2
NN10128	.030” Undersize	”27”	43	2
NN10132	Nut	”35”	20	1
NN10143	Filter – Oil	”32”	7	1
NN10159	Cap & Indicator – Oil Fill	”31”	13	1
NN10176	Wrapper – Element	”35”	2	1
NN10187	Tube – Air Intake	”35”	17	1
NN10190	Gasket	”35”	19	1
NN10211	Cap – Fuel Fitting	”7”	17	1
NN10212	Pump – Fuel	”7”	14	1
NN10227	Rod – Governor Control	”36”	7	1
NN10239	Fitting – Barbed	”35”	18	1
NN10253	Cable – Spark Plug	”34”	9	2
NN10274	Switch – High Engine Temp	”43”	11	1
NN10277	Fuse – 30 Amp, ATO or ATC	”45”		1
NN10278	Connector – Male	”43”	14	1
NN10279	Contact – Socket	”43”	25	1
NN10281	Connector – Male	”43”	26	1
NN10302	Line – Fuel 7”	”7”	13	
NN10306	Hose – Fuel	”36”	18	1
NN10348	Clip – Wire	”7”	24	1
NN10362	Washer – Flat	”36”	4	1
NN10370	Screw – Cap Hex Hd.	”27”	19	2
NN10373	Screw – Cap Hex Hd.	”32”	4	2
NN10375	Screw – Cap Hex. Hd.	”36”	12	4
NN10379	Screw – Cap Hex Hd.	”31”	7	4
NN10390	Screw – Hex. Washer Hd.	”35”	13	1
NN10394	Screw – Hex Washer Hd.	”33”	17	2
NN10425	Washer – Int. Tooth	”43”	24	1
NN10446	Cover – Air Cleaner	”35”	6	1
NN10447	Hose	”35”	22	1
NN10448	Tube – Oil Fill	”31”	11	1
NN10506	Filter – Fuel	”7”	11	1
NN10508	Bracket – Cable	”25”	3	1
NN10511	Lever – Choke	”38”	11	1
NN10545	Screw – Cap Hex. Hd.	”36”	15	2
NN10545	Screw – Cap Hex. Hd.	”33”	25	4
NN10545	Screw – Hex. Washer Hd.	”34”	6	2
NN10553	Harness – Engine Wiring	”43”	27	1
NN10656	Swivel – Choke Lever	”38”	9	1
NN10769	Housing – Blower	”25”	43	1
NN10773	Crankshaft	”30”	11	1
NN10774	Element – Air Cleaner	”35”	1	1
NN10790	Line – Fuel 12”	”7”	12	1
NN10811	Kit – Shaft, Throttle	”37”	1	1
NN10821	Cover – Valve	”27”	21	1
NN10824	Switch – Low Oil Pressure	”43”	12	1
NN10824	Switch – Low Oil Pressure	”32”	6	1
NN10825	Kit – Gearcase	”33”	27	1
NN10830	Plug – Cap	”38”	7	1
NN10832	Bracket – Governor Adjust	”25”	40	1
NN10858	Jet – Power, Fixed, Optional	”37”	8	1
NN10859	Jet – Idle	”37”	6	1
NN10877	Spring – Governor Rod	”36”	8	1
NN10886	Seal – Dust	”28”	6	1
NN10894	Drain – Oil Filter	”32”	9	1
NN10895	Gasket – Gearcase Mtg.	”33”	8	1
NN10929	Kit – Mounting Bracket	”28”	5	1
NN10930	Cap – Starter, Solenoid	”28”	10	1
38–1420	Switch – Seat	”45”	37	1
55–3570	Cap – Fuel	”7”	9	1
57–8000	Bearing – Camshaft	”27”	59	2
57–8010	Gasket – Bearing Plate	”27”	27	1
57–8020	Standard	”27”	52	1
57–8030	.010” Undersize	”27”	52	1
57–8050	Standard	”27”	29	1
57–8060	.010” Undersize	”27”	29	1
57–8090	Gasket – Oil Base	”31”	5	1
57–8130	Gear – Crankshaft	”30”	12	1
57–8140	Washer – Gear	”30”	13	1

*Not Illustrated

TORO PART NUMBER INDEX (Cont.)

Part No.	Description	Pg. No.	Ref. No.	Qty.
57–8150	Screw – Cap Hex Hd.	”29”	1	1
57–8160	Washer – Thrust	”27”	35	2
57–8170	Shim – Crankshaft .005”	”27”	28	A/R
57–8180	Gear – Ring	”29”	6	1
57–8210	Gear – Camshaft	”30”	5	1
57–8230	Washer – Thrust, Special	”30”	6	1
57–8280	Gasket – Valve Cover	”27”	18	2
57–8330	Gasket – Cylinder Head	”27”	38	2
57–8410	Bolt – Connecting Rod	”27”	44	4
57–8450	Standard	”27”	9	4
57–8460	Gasket Kit – Oil Pump	”27”	58	1
57–8470	Plunger – Bypass Valve	”27”	3	1
57–8480	Pump – Oil	”27”	54	1
57–8490	Cup – Intake, Oil Pump	”31”	4	1
57–8580	Baffle – Breather Tube	”27”	11	1
57–9050	Jet – Power	”37”	7	1
57–9090	Ring – Retaining	”30”	1	1
57–9100	Spring – Governor	”25”	8	1
57–9120	Bushing – Control Arm	”25”	9	1
57–9120	Swivel – Throttle Lever	”25”	32	1
57–9130	Hub – Governor Cup	”30”	2	1
57–9180	Link – Choke	”38”	3	1
57–9190	Clamp – Cable	”25”	2	1
57–9190	Clamp – Cable	”25”	27	1
57–9190	Clip – Choke Cable	”38”	4	1
57–9210	Gasket – Exhaust	”23”	19	2
57–9340	Plug – Spark	”34”	8	2
57–9360	.002” Undersize	”27”	52	1
57–9430	Regulator – Voltage 20 Amp	”33”	12	1
57–9550	Clamp – Vacuum Port Cap	”33”	21	1
57–9570	Seal – Oil, Governor Shaft	”33”	5	1
57–9580	Seal – Oil, Crankshaft	”33”	26	1
57–9590	Seal – Oil, Crankshaft Rear	”27”	31	1
57–9610	”O”Ring	”31”	12	1
57–9620	”O”Ring	”36”	5	1
57–9630	Bearing – Ball, Gov. Shaft	”33”	7	1
57–9640	Ball – Governor	”30”	4	5
57–9650	Bearing – Governor Shaft	”33”	6	1
57–9660	Key – Crankshaft Gear	”30”	15	1
57–9660	Key – Woodruff	”30”	8	1
57–9690	Plug – Welch, Camshaft	”27”	25	1
57–9700	Clip – Retaining, Control	”36”	6	1
57–9710	Ring – Retaining	”30”	14	1
57–9720	Ring – Retaining	”27”	48	4
57–9730	Clip – Retaining	”36”	9	1
57–9730	Clip – Retaining, Control Rod	”33”	4	1
57–9740	Washer – Flat, Copper	”27”	20	2
57–9750	Washer – Flat	”32”	3	2
57–9750	Washer – Flat	”33”	24	5
57–9760	Washer – Flat, Copper	”27”	2	1
57–9770	Washer – Flat	”28”	2	2
57–9770	Washer – Flat	”27”	40	18
57–9790	Nut	”27”	47	4
57–9800	.020” Undersize	”27”	52	1
59–0010	.030” Undersize	”27”	52	1
59–0020	.002” Undersize	”27”	29	1
59–0030	.020” Undersize	”27”	29	1
59–0040	.030” Undersize	”27”	29	1
59–0050	Standard	”27”	36	2
59–0080	.010” Oversize	”27”	36	2
59–0100	Standard	”27”	46	2
59–0110	.002” Oversize	”27”	46	2
59–0120	.005” Oversize	”27”	46	2
59–0130	.010” Oversize	”27”	46	2
59–0140	.025” Oversize	”27”	46	2
59–0180	Side – Right	”27”	39	1
59–0260	.002” Oversize	”27”	9	4
59–0280	Spring – Bypass Valve	”27”	4	1
59–0290	Tube – Oil, Cylinder Block	”27”	51	1
59–0360	Tube – Vacuum Port	”33”	23	1
59–0370	Cap – Vacuum Port	”33”	22	1
59–0400	Pin – Center	”30”	7	1
59–0420	Yoke – Governor Shaft	”33”	2	1
59–0430	Spring – Idle Setting	”25”	6	1
59–0450	Cup – Governor	”30”	3	1
59–0470	Bracket – Choke Cable	”38”	1	1
59–0580	Clamp – Wire, Alternator	”25”	15	1
59–0590	Terminal – Stator Leads	”33”	18	2
59–0720	Pin – Cotter	”38”	10	1
59–0720	Pin – Cotter	”25”	30	1
59–0730	Pin – Drive, Bearing Stop	”27”	26	4
59–0740	Pin – Dowel, Governor	”33”	9	1
59–0750	Pin – Alignment, Gear Cover	”27”	53	2
59–0790	Stud – Gear Cover	”33”	29	1
59–0810	Washer – Flat	”29”	3	1
59–0820	Washer – Flat	”27”	22	1
59–0820	Washer – Flat	”25”	34	4
59–0830	Washer – Flat	”25”	4	2
59–0830	Washer – Flat	”25”	13	2
59–0830	Washer – Flat	”25”	23	1
59–0850	Washer – Flat	”38”	12	1
59–0880	Screw – Cap Flanged Hd.	”27”	32	5
59–0900	Screw – Cap Hex Hd	”27”	41	18
59–0910	Screw – Cap Hex Hd.	”27”	5	1
59–0950	Screw – Mach. Pan Hd.	”33”	1	2
59–0970	Screw – Tapping, Fl. Hd.	”25”	44	2
59–0980	Screw – Tapping, Fl. Hd.	”25”	35	4
59–0980	Screw – Tapping, Wash. Hd.	”25”	14	2
59–1010	Screw – Self Tap. Fl. Hd.	”25”	28	1
59–1030	Screw – Tapping Hex. Hd.	”25”	5	1
59–1050	Screw – ST Pan Hd	”7”	16	2
59–1050	Screw – Self Tap. Fl. Hd.	”25”	36	1
59–1080	Screw – Cap Hex. Fl. Hd.	”25”	18	4
59–1080	Screw – Cap Hex. Wash. Hd.	”33”	11	1
59–1100	Screw – Lock Hd.	”25”	38	2
59–1130	Nut – Hex.	”33”	28	1
59–1180	Capacitor	”35”	14	1
62–2740	Kit – Brush, Starter	”28”	13	1
62–2760	Kit – Bushing, Starter	”28”	12	1
62–2760	Kit – Hardware, Starter	”28”	4	1
62–2770	Kit – Shift Lever, Starter	”28”	8	1
62–2790	Assembly – Carburetor	”36”	10	1
62–2800	Kit – Float	”37”	3	1
62–7770	Key – Padded Ignition	”45”	23	2
66–0120	Knob – Throttle Control	”3”	29	2
71–5730	Base – Oil	”31”	8	1
71–5770	Valve – Intake	”27”	37	2
71–5780	Valve – Exhaust	”27”	45	2
71–5790	Spring – Valve	”27”	6	4
71–5800	Washer – Valve Spring	”27”	7	4
71–5810	Side – Left	”27”	39	1
71–5830	Cap – Valve	”27”	17	4
71–5920	Flywheel	”29”	5	1
71–5980	Gasket – Manifold To Block	”36”	16	2

*Not Illustrated

TORO PART NUMBER INDEX (Cont.)

Part No.	Description	Pg. No.	Ref. No.	Qty.
71–5990	Cover – Plunger, Ignition	”34”	1	1
71–6000	Coil – Battery Ignition	”34”	7	1
71–6010	Rotor – Ignition	”34”	13	1
71–6040	Starter – Solenoid Shift,	”28”	3	1
71–6060	Clip – Wire	”34”	10	1
71–6080	Bracket – Lift	”25”	19	2
71–6140	Grommet – Rubber	”35”	16	1
71–6170	Seal – Oil Fill Tube	”31”	9	1
71–6180	Seal – Intake Valve	”27”	23	2
71–6190	Key – Flywheel	”29”	7	1
71–6220	Clip	”43”	22	1
71–6220	Clip – Wire	”34”	11	2
71–6220	Clip – Wire	”25”	17	1
71–6220	Clip – Wire	”36”	19	1
71–6250	Guide – Valve, Exhaust	”27”	24	2
71–6260	Guide – Valve, Intake	”27”	24	2
71–6290	Kit – Gasket Complete	”27”	57	1
71–6310	Pin – Piston	”27”	49	2
71–6320	Camshaft	”30”	9	1
71–6340	Screw	”29”	8	6
71–6380	Control – Ignition	”33”	14	1
71–6410	Insulator – Ignition, Module	”33”	15	1
71–6430	Nut – Hex. Flange Hd.	”34”	5	1
71–6440	Nut – Hex. Flange Hd.	”34”	4	1
71–6460	Screw – Hex Washer Hd.	”34”	12	1
72–3860	Kit – Shaft, Choke	”37”	4	1
72–3870	Kit – Lever, Choke	”37”	5	1
72–3880	Screw – Cap Flange Hd.	”38”	2	1
72–3890	Screw – Hex. Hd.	”25”	33	1
72–3890	Screw – Machine, Hex. Hd.	”38”	8	1
72–3900	Screw – Flange Hd.	”38”	5	1
72–3900	Screw – Tapping Hex Hd.	”25”	1	1
72–3930	Kit – Solenoid, Starter	”28”	9	1
72–3940	Assembly – Clutch, Starter	”28”	7	1
76–1340	Decal – Made in U.S.A.	”47”	15	1
76–1420	Steering Wheel	”18”	15	1
78–0020	Hourmeter	”45”	50	1
78–0030	Voltmeter	”45”	54	1
78–0040	Gauge – Fuel	”45”	53	1
78–0060	Tachometer	”45”	51	1
78–0080	Bracket – Mounting	”45”	2	2
78–0090	Bracket – Mounting	”45”	52	1
78–0100	Bracket – Mounting	”45”	9	2
78–0370	Insert – Logo	”18”	14	1
78–1411	Support – Steering	”18”	22	1
78–1450	Shaft	”18”	20	1
78–1481	Pinion	”18”	8	1
78–1490	Shaft – Lower Steering	”19”	32	1
78–1531	Shim 0.010	”18”	25	3
78–1540	Bracket – Control, Lower	”3”	25	1
78–1540	Bracket – Control, Lower	”14”	47	1
78–2680	Frame	”20”	9	1
78–2990	Plate – Seat Pivot	”6”	15	1
78–3320	Bracket – Mounting	”45”	49	1
78–5631	Bracket – Control	”13”	5	1
78–5640	Bar – Lift	”8”	5	1
78–5660	Lever – Motion Control	”13”	2	1
78–6020	Rod – Pivot	”14”	40	1
78–7740	Arm – Brake Pivot	”12”	18	1
78–8350	Decal – Indicator Lights	”47”	21	1
78–8500	Lever – Parking Brake	”13”	22	1
79–0450	Lamp – .938” Long	”45”	10	4
79–1350	Pedal – Brake	”12”	1	1
79–2130	Board – Light Circuit	”45”	19	1
79–2660	Gauge – Vacuum	”45”	11	1
79–3180	Terminal – Ground	”7”	7	1
79–3630	Assembly – Wire Harness	”45”	48	1
79–4020	Plate – Front	”4”	18	1
79–4890	Panel – LH	”3”	18	1
79–4990	Bracket – Support, Fender	”6”	28	1
79–5020	Tube	”15”	29	1
79–5120	Hoodstand	”4”	14	1
79–5130	Cover – Side, LH	”4”	16	1
79–5220	Engine – 20HP	”23”	7	1
79–5270	Filter – Oil	”15”	24	1
79–5700	Bellcrank	”9”	14	1
79–5720	Trunnion	”9”	5	1
79–6280	Head – Cylinder	”27”	39	2
79–6330	Housing – Air Cleaner	”35”	11	1
79–6340	Support – Air Cleaner	”35”	12	1
79–6370	Arm – Governor Control	”25”	7	1
79–6390	Bracket – Gov. Control	”25”	26	1
79–6400	Bushing – Gov. Control	”25”	25	1
79–6420	Adapter – Governor Arm	”25”	37	1
79–6440	Screen – Air Inlet	”29”	4	1
79–6460	Bracket – Fill Tube	”31”	2	1
79–6470	Gasket – Oil Filter Adapter	”32”	1	1
79–6490	Gasket – Plate	”34”	14	1
79–6510	Spacer – Stud	”35”	3	1
79–6520	Spacer – Rubber	”35”	7	1
79–6580	Screw – Cap Hex. Hd.	”28”	1	2
82–0020	Plate – Bearing, Rear	”27”	30	1
82–0500	Adapter – Oil Filter	”32”	2	1
82–0530	Clamp – Tube, Breather	”27”	12	1
82–0540	Tube – Breather	”27”	10	1
82–0550	Cap & Valve – Breather	”27”	15	1
82–0560	Screen – Tube, Breather	”27”	14	2
82–0570	”O”Ring – Cap, Breather	”27”	13	1
82–0620	Guard – Stationary	”25”	39	1
82–0650	Cover – Element	”35”	8	1
82–0680	Filter – Gasket Oil	”32”	8	1
82–0780	Kit – Repair	”37”	2	1
82–0850	Gasket – Carb. Mounting	”37”	9	2
82–0850	Gasket – Carb/Manifold	”36”	11	1
82–1000	Body – Terminal Conn. Kit	”33”	13	2
82–1070	Fitting – Barbed	”36”	3	1
82–1080	Clamp	”35”	21	1
82–1080	Clamp – Hose	”7”	10	6
82–1080	Clamp – Hose 1/2” Dia.	”36”	2	2
82–1090	Clamp – Hose .44” Dia.	”36”	2	1
82–1120	Hose – Breather	”36”	1	1
82–1130	Plug – Sq. Hd.	”31”	10	2
82–1310	Washer – Flat	”31”	6	4
82–1310	Washer – Lock	”27”	33	5
82–1320	Washer – Flat	”29”	2	1
82–1340	Washer – Flat	”34”	2	2
82–1340	Washer – Flat	”27”	55	2
82–1350	Nut	”28”	11	1
82–1350	Washer – Flat	”36”	13	6
82–1360	Screw – Cap Hex. Hd.	”34”	3	2
82–1370	Screw – Cap Hex. Hd.	”27”	56	2
82–1370	Screw – Hex. Hd.	”25”	21	1
82–1480	Screw – Tapping Round Hd.	”27”	16	1
82–1500	Screw – Machine, Hex Hd.	”33”	20	3
82–1510	Screw – Cap Hex. Hd.	”32”	10	2
82–1540	Screw	”43”	23	1

*Not Illustrated

TORO PART NUMBER INDEX (Cont.)

Part No.	Description	Pg. No.	Ref. No.	Qty.
82–1540	Screw – Hex. Washer Hd.	”25”	16	1
82–1540	Screw – Hex. Washer Hd.	”36”	17	1
82–1550	Screw – Hex. Washer Hd.	”35”	9	2
82–1560	Screw – Pan Hd.	”31”	1	1
82–1590	Screw – Pan Hd. Taptite	”25”	42	4
82–1600	Screw – Cap Hex Fl. Hd.	”25”	11	2
82–1620	Washer – Lock	”25”	22	1
82–1660	Washer – Int. Tooth Lock	”33”	16	2
82–1670	Knob	”35”	5	1
82–1700	Nut – Speed Type U	”31”	3	1
82–1800	Standard	”27”	42	2
83–2720	Bolt – Lug	”40”	7	10
83–2820	Spring	”14”	53	1
83–6520	Rod – Lock	”20”	15	1
86–9280	Tube – Hydraulic (Pressure)	”8”	21	1
86–9290	Tube – Hydraulic (Return)	”8”	32	1
88–2790	Decal – Danger	”47”	19	1
88–2790	Decal – Danger	”10”	23	1
88–3200	Decal – Maintenance	”47”	17	1
88–3220	Seat	”6”	1	1
88–3230	Kit – Armrest	”6”	*	1
88–3240	Block – Bearing	”18”	26	1
92–0270	Washer	”3”	10	4
92–0900	Block – Cylinder (Short)	”27”	1	1
92–0902	.010” Oversize	”27”	42	2
92–0903	.020” Oversize	”27”	42	2
92–0904	.030” Oversize	”27”	42	2
92–0905	Standard	”27”	50	2
92–0906	.005” Oversize	”27”	50	2
92–0907	.010” Oversize	”27”	50	2
92–0908	.020” Oversize	”27”	50	2
92–0909	.030” Oversize	”27”	50	2
92–0911	Sleeve –Bearing	”30”	10	1
92–0912	Elbow – Street 45°	”32”	5	1
92–0913	Nut – Wing	”35”	4	1
92–0915	Screw – Machine Hex. Hd.	”35”	10	2
92–0916	Screw – Shoulder	”38”	6	1
92–0918	Manifold – Intake	”36”	14	1
92–0920	Housing – Cylinder Air, LH	”25”	12	1
92–0921	Housing – Cylinder Air, RH	”25”	20	1
92–0967	Stator	”33”	19	1
92–0986	Bracket – Arm L.H.	”6”	7	1
92–0987	Bracket – Arm R.H.	”6”	3	1
92–0988	Rest – Arm	”6”	4	2
92–0989	Screw	”6”	5	2
92–0990	Screw	”6”	8	2
92–0991	Nut – Acorn Lock	”6”	9	2
92–0992	Screw	”6”	2	6
92–0993	Spacer – Nylon	”6”	6	4
92–0995	Shaft – Upper Steering	”18”	12	1
92–1527	Guard – Belt	”5”	2	1
92–7293	Plate – Hoodstand, Top	”4”	8	1
92–7295	Plate – Hoodstand, Rear	”3”	4	1
92–7297	Transaxle	”10”	*	1
92–7298	Case – Transaxle, RH	”10”	11	1
92–8747	Decal – Attach–A–Matic	”20”	6	2
92–8747	Decal – Attach–A–Matic	”47”	12	1
92–8749	Decal – Unidrive	”47”	11	1
92–8946	Decal – Danger	”47”	8	1
92–8946	Decal – Danger	”4”	10	1
92–9826	Decal – Front	”2”	2	1
92–9826	Decal – Front Hood	”47”	5	1
92–9827	Decal – Rear Fender	”47”	4	1
92–9833	Decal – 520 Hydro	”47”	9	2
92–9834	Decal – Hood LH	”47”	2	1
92–9834	Decal – Hood LH	”2”	16	1
92–9835	Decal – Hood RH	”2”	*	1
92–9835	Decal – Hood RH	”47”	1	1
92–9836	Plate – Wheel Horse Logo	”47”	20	1
92–9836	Plate – Logo	”2”	1	1
92–9838	Decal – Danger	”3”	13	1
92–9838	Decal – Danger	”47”	16	1
93–1613	Latch – Front Hitch	”20”	18	1
237–69	”O”Ring	”18”	13	1
281–10	Plug – Pipe	”10”	20	2
281–10	Plug – Pipe	”15”	27	3
288–4	Cap	”23”	10	1
302–5	Fitting – Grease	”12”	26	1
302–5	Fitting – Grease	”19”	39	4
302–5	Fitting – Grease, Straight	”19”	46	2
302–16	Fitting – Grease	”19”	28	1
321–3	Screw – Cap Hex. Hd.	”4”	3	2
321–4	Bolt	”13”	6	2
321–4	Screw	”8”	10	1
321–4	Screw – Cap Hex. Hd.	”43”	4	2
321–6	Bolt	”14”	42	1
321–8	Bolt	”6”	19	2
321–9	Screw – Hex. Hd.	”13”	17	1
321–11	Bolt	”8”	31	2
322–1	Bolt	”19”	33	1
322–1	Screw – Cap Hex. Hd.	”3”	21	2
322–2	Bolt	”7”	22	3
322–3	Bolt	”14”	46	2
322–3	Screw – Cap Hex. Hd.	”4”	17	5
322–3	Screw – Cap Hex. Hd.	”15”	20	2
322–3	Screw – Cap Hex. Hd.	”23”	22	4
322–3	Screw – Cap Hex. Hd.	”3”	23	3
322–3	Screw – Cap Hex. Hd.	”6”	26	4
322–4	Bolt	”6”	10	2
322–5	Bolt	”9”	3	1
322–5	Screw – Cap Hex. Hd.	”5”	7	2
322–5	Screw – Cap Hex. Hd.	”6”	33	4
323–6	Bolt	”18”	4	2
323–6	Bolt	”39”	1	2
323–7	Screw – Cap Hex. Hd.	”23”	16	4
323–7	Screw – Cap Hex. Hd.	”41”	8	1
323–8	Bolt	”13”	28	1
323–8	Screw – Cap Hex. Hd.	”23”	18	4
323–8	Screw – Hex. Hd.	”14”	38	1
323–9	Bolt	”18”	11	6
323–9	Bolt	”12”	20	1
323–9	Bolt	”13”	27	1
323–9	Screw – Hex. Hd.	”11”	24	1
323–15	Bolt	”11”	9	2
323–23	Bolt	”12”	15	1
323–25	Screw – Cap Hex. Hd.	”15”	4	2
323–25	Screw – Hex. Hd.	”11”	22	3
323–26	Screw – Hex. Hd.	”11”	21	1
323–44	Screw – Cap Hex. Hd.	”20”	11	6
3217–5	Nut	”13”	10	2
3217–7	Nut	”23”	13	4
3217–27	Nut – Hex.	”45”	4	A/R
3218–1	Nut – Jam	”41”	36	2
3218–3	Nut	”10”	3	2
3218–3	Nut	”11”	17	2
3220–1	Nut	”13”	8	3

*Not Illustrated

TORO PART NUMBER INDEX (Cont.)

Part No.	Description	Pg. No.	Ref. No.	Qty.
3220–11	Nut	”19”	36	2
3229–25	Bolt – Carriage	”2”	11	4
3229–25	Bolt – Carriage	”41”	33	2
3230–1	Bolt – Carriage	”5”	5	1
3231–25	Bolt – Carriage	”20”	5	3
3235–22	Bolt	”12”	16	1
3235–22	Screw – Hex. Hd., Nylon	”7”	25	1
3242–2	Screw – Set	”15”	*40	2
3243–5	Screw – Set	”10”	2	2
3243–5	Screw – Set	”11”	16	2
3245–32	Screw – Set	”12”	4	1
3247–4	Setscrew – Socket Hd.	”27”	34	2
3250–31	Screw (Optional)	”45”	29	4
3253–2	Washer – Lock	”33”	10	3
3253–3	Washer – Lock	”43”	2	2
3253–3	Washer – Lock	”41”	11	2
3253–4	Washer – Lock	”15”	21	2
3253–4	Washer – Lock	”23”	21	4
3253–4	Washer – Lock	”7”	23	2
3253–4	Washer – Lock	”19”	34	1
3253–4	Washer – Lock	”6”	34	4
3253–5	Nut – Hex. Washer Hd.	”35”	15	1
3253–5	Washer	”27”	33	5
3253–15	Washer – Lock	”45”	21	2
3253–17	Washer – Lock	”7”	8	5
3253–21	Washer – Lock	”21”	2	4
3253–21	Washer – Lock	”39”	2	2
3253–21	Washer – Lock	”23”	12	4
3254–1	Washer – Lock	”45”	31	4
3254–2	Washer – Internal Tooth	”2”	18	1
3254–8	Washer – Lock	”19”	48	1
3255–25	Washer – Lock	”45”	3	2
3256–4	Washer	”7”	1	2
3256–4	Washer	”12”	22	1
3256–4	Washer	”13”	29	2
3256–6	Washer	”12”	23	2
3256–21	Washer – Flat	”45”	20	2
3256–22	Washer	”13”	16	2
3256–22	Washer	”2”	17	3
3256–22	Washer	”6”	20	2
3256–22	Washer – Flat	”43”	3	4
3256–22	Washer – Flat	”41”	35	2
3256–23	Washer	”9”	18	1
3256–23	Washer	”6”	24	4
3256–23	Washer – Flat	”5”	8	2
3256–23	Washer – Flat	”3”	26	4
3256–23	Washer – Flat	”8”	15	2
3256–24	Washer	”12”	10	2
3256–24	Washer – Flat	”23”	17	4
3256–26	Washer	”9”	1	1
3256–26	Washer	”18”	7	1
3256–26	Washer – Flat	”21”	7	1
3256–26	Washer – Flat	”15”	16	1
3256–27	Washer – Flat	”41”	28	1
3256–62	Washer	”9”	9	3
3257–24	Key – Woodruff	”15”	14	1
3272–1	Pin – Cotter	”8”	4	2
3272–1	Pin – Cotter	”2”	14	2
3272–6	Pin – Cotter	”12”	24	2
3272–7	Pin – Cotter	”19”	29	4
3272–10	Pin – Cotter	”41”	6	3
3272–11	Pin – Cotter	”18”	5	1
3272–11	Pin – Cotter	”12”	8	2
3272–11	Pin – Cotter	”8”	22	1
3272–12	Pin – Cotter	”40”	13	2
3272–21	Pin – Cotter	”18”	19	1
3272–22	Pin – Cotter	”18”	23	1
3290–378	Tie – Cable	”43”	*	7
3296–4	Nut	”14”	50	1
3296–27	Nut	”45”	32	4
3296–29	Nut	”9”	19	1
3296–29	Nut	”14”	48	2
3296–29	Nut	”8”	14	1
3296–29	Nut – Lock	”5”	1	8
3296–29	Nut – Lock	”4”	5	1
3296–29	Nut – Lock	”6”	12	2
3296–29	Nut – Lock	”3”	16	11
3296–39	Nut	”18”	1	2
3296–39	Nut	”9”	6	1
3296–39	Nut	”10”	8	3
3296–39	Nut	”12”	9	1
3296–39	Nut	”18”	10	4
3296–39	Nut	”12”	21	1
3296–39	Nut	”13”	32	2
3296–39	Nut	”23”	14	4
3296–39	Nut – Lock	”20”	4	9
3296–39	Nut – Lock	”41”	14	1
3296–39	Nut – Lock	”15”	23	4
3296–42	Nut	”8”	2	2
3296–42	Nut	”13”	7	4
3296–42	Nut	”8”	12	1
3296–42	Nut – Lock	”43”	1	5
3296–42	Nut – Lock	”2”	15	4
3296–42	Nut – Lock	”6”	16	2
3296–45	Nut – Lock	”15”	17	1
32103–22	Nut – Wing	”43”	5	2
32115–5	Nut – Speed	”3”	2	12
32120–47	Ring – Retaining	”9”	16	1
32120–47	Ring – Retaining	”14”	35	2
32120–47	Ring – Retaining	”13”	20	4
32120–62	Ring – Snap, Internal	”41”	24	1
32120–64	Ring – Retaining	”15”	30	1
32120–72	Ring – Snap, External	”41”	22	2
32121–111	Pin – Spirol	”18”	16	1
32128–33	Nut – Lock, Flange Hd.	”3”	6	2
32136–5	Nut – Slotted	”40”	10	2
32146–17	Nut	”13”	15	1
32151–11	Ring – Retaining	”41”	2	1
32151–29	Ring – Retaining	”19”	42	2
32151–91	Ring – Retainer	”9”	10	2
32312–94	Pin – Spirol	”14”	37	1

*Not Illustrated

IDENTIFICATION AND ORDERING

MODEL AND SERIAL NUMBERS

The 520 H has two identification numbers; a model number and a serial number. The two numbers are stamped on a plate which is located on the main frame under the seat. In any correspondence concerning the 520H H, supply model and serial numbers to assure that correct information and replacement parts are obtained.

To order replacement parts from an Authorized TORO Service Dealer, supply the following information:
1. Model and serial number of the 520 H.
2. Part number, description, and the quantity of part(s) desired.

NOTE: Do not order by reference number if a parts catalog is being used; use the PART NUMBER.

TABLE OF CONTENTS

Description	Page
Hood Assembly	2
Dash and Side Panels Assembly	3
Hoodstand Assembly	4
Belt Guard and Footrest Assembly	5
Seat, Fender And Fender Supports	6
Fuel Tank And Fuel Pump	7
Hydraulic Control System	8
Hydrostatic Lift Linkage	9
Transaxle	10
Clutch, Brake & Speed Control Linkage	12
Clutch, Brake Motion Control Linkage	13
Hydrostatic Transmission	15
Hydraulic Pump And Motor	16
Front Axle Axle And Steering	18
Front & Side Hitch Assembly	20
Rear Hitch Assembly	21
Engine and Exhaust	22
Blower Housing and Governor	24
Engine Cylinder Block	26
Starter	28
Blower Screen and Ring	29
Camshaft & Crankshaft	30
Oil Fill Tube, Bracket & Base	31
Oil Filter and Low Oil Pressure Cut–Off Switch	32
Gearcase & Ignition Controls	33
Ignition – Electronic	34
Air Cleaner	35
Intake Manifold	36
Carburetor Assembly	37
Choke Control (Front Pull)	38
Drive Belt and Pulleys	39
Wheel and Tires	40
PTO Control & Clutch	41
Battery & Headlights Assembly	42
Electrical System	44
Wiring Diagram	46
Decals	47
Numerical Parts Index	48

Optional Equipment

Description	Model / Part No.
36” Rear Discharge Deck – Low Cut	78300
42” Side Discharge Deck – Low Cut	78346
48” Side Discharge Deck	78360
Rear Wheel Weights	81115
42” Rear Discharge Deck – Low Cut	78351
Rear Wheel Weights (Flush)	81117
48” Dozer Blade	79350
Front Wheel Weights	81214
50” Grader Blade	79351
Tire Chains	82522
42” Single Stage Snowthrower	79360
Clevis Hitch	85518
44” Two Stage Snowthrower	79361
*Auxiliary Fuel Tank	83300
Vacuum/Blower (42” & 48” S.D. Mower Only)	79301
Chrome Front Hubcap w/logo	114427
36” Tiller	79370
Chrome Rear Hubcap w/logo	114428
Tube Rear	109546
Tube Rear Cleat	100291
Tire Rear Cleat	7607
Tube Front	100079
Cleated Tire Wheel Asm LH	110933
Cleated Tire Wheel Asm RH	110934
Wheel Rear Cleat	110677

Kits

Front Weight	81125
Recycler (42” R.D. Deck Only)	86001
Dual Wheel	80732.D.
Mower Only)	0701MC

* CAN NOT BE USED WITH CLEVIS HITCH OR REAR BAGGER