FORM NO. 3317–385

TORO®

MODEL NO. 26635BC–5900001 & UP

PARTS CATALOG

# 53cm KEY–LECTRIC®

**Rear Bagging Mower**

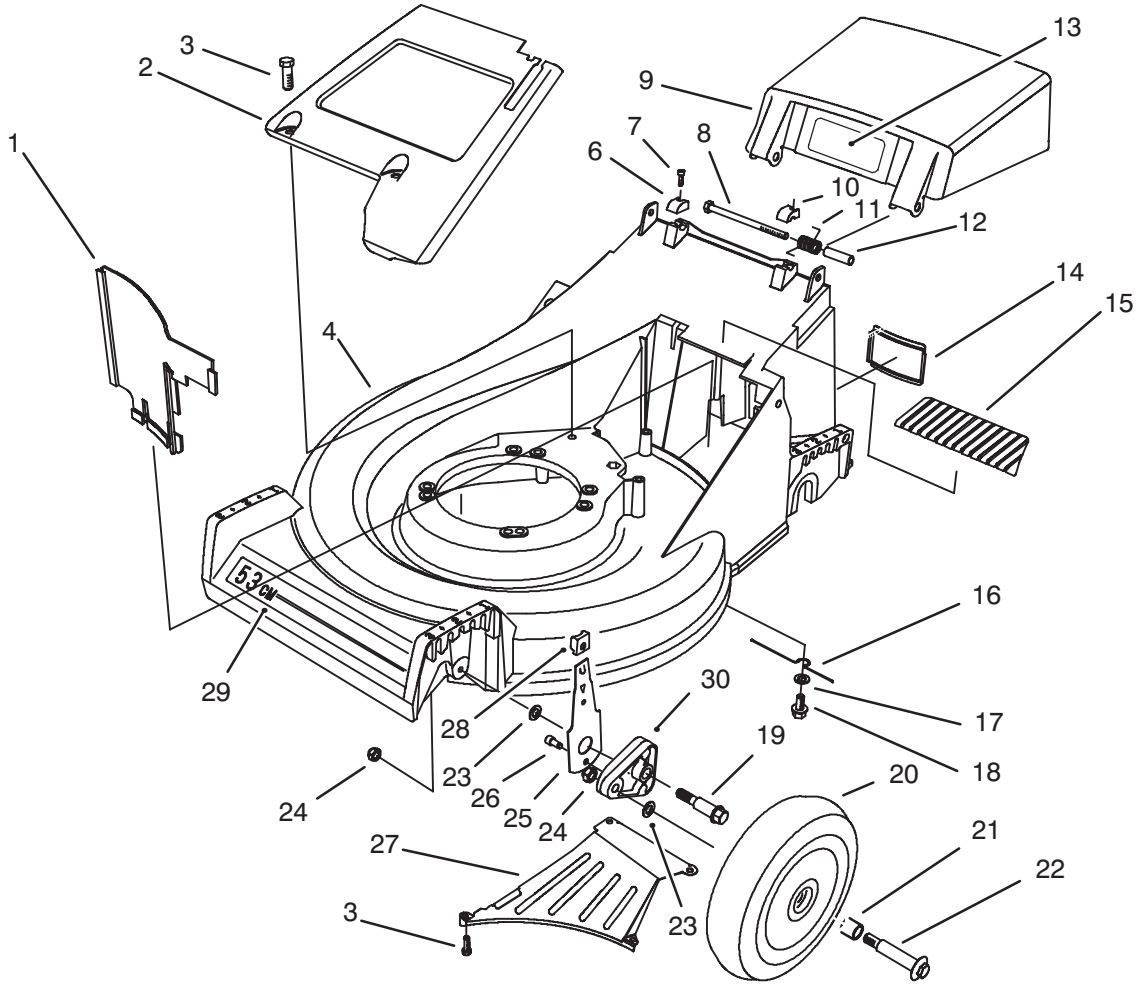


## HOUSING ASSEMBLY

| Ref. No. | Part No. | Description | No. Used |
|---|---|---|---|
| 1 | 66–0020 | Panel – Vertical | 1 |
| 2 | 65–5660 | Panel – Screen | 1 |
| 3 | 32144–70 | Screw – Cap Hex. Hd. | 6 |
| 4 | 16–1769 | Housing – 53cm (Incl. Ref. #29) | 1 |
| 6 | 71–7910 | Cap – Hinge Bolt R.H. | 1 |
| 7 | 65–5210 | Screw – Thread Forming | 2 |
| 8 | 322–29 | Screw – Hex Hd. Cap | 2 |
| 9 | 71–9800 | Door – Discharge | 1 |
| 10 | 71–7900 | Cap – Hinge Bolt L.H. | 1 |
| 11 | 71–9840 | Spring – Door | 2 |
| 12 | 71–8580 | Spacer – Door | 2 |
| 13 | 93–4105 | Decal – Danger | 1 |
| 14 | 71–9650 | Access – Cover | 1 |
| 15 | 71–9920 | Cover – Top | 1 |

| Ref. No. | Part No. | Description | No. Used |
|---|---|---|---|
| 16 | 66–0620 | Retainer – Belt | 1 |
| 17 | 3256–24 | Washer – Flat | 1 |
| 18 | 32144–15 | Screw – Hex Flange Hd. | 1 |
| 19 | 66–0560 | Screw – Shoulder | 2 |
| 20 | 14–9949 | Wheel & Tire Assembly (Incl. Ref. #21) | 2 |
| 21 | 27–6250 | Bushing – Wheel | 4 |
| 22 | 27–6231 | Bolt – Wheel | 2 |
| 23 | 40–1940 | Washer – Wheel Bolt | 4 |
| 24 | 3296–6 | Nut – Lock | 4 |
| 25 | 66–0540 | Arm – Spring Front | 2 |
| 26 | 65–5220 | Screw – Cap Socket Hd. | 2 |
| 27 | 71–9640 | Ramp – Discharge | 1 |
| 28 | 25–7740 | Knob – Arm | 2 |

© The TORO Company – 1994
All Rights Reserved

3317–385

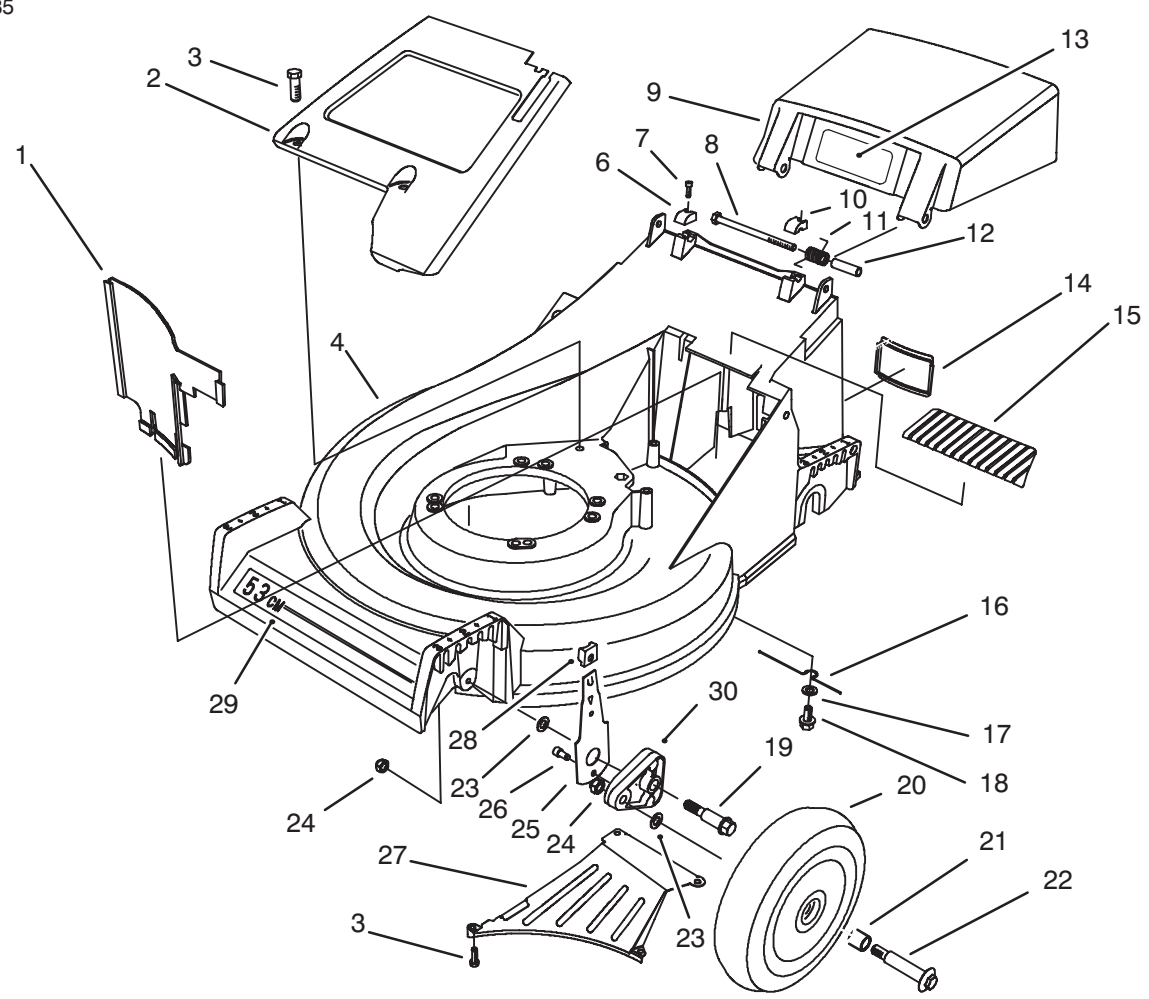


# HOUSING ASSEMBLY (Continued)

| Ref. No. | Part No. | Description | No. Used |
|---|---|---|---|
| 29 | 71–9870 | Decal – Deck 53cm | 1 |
| 30 | 66–0580 | Arm – Pivot | 2 |

| Ref. No. | Part No. | Description | No. Used |
|---|---|---|---|

*Not Illustrated

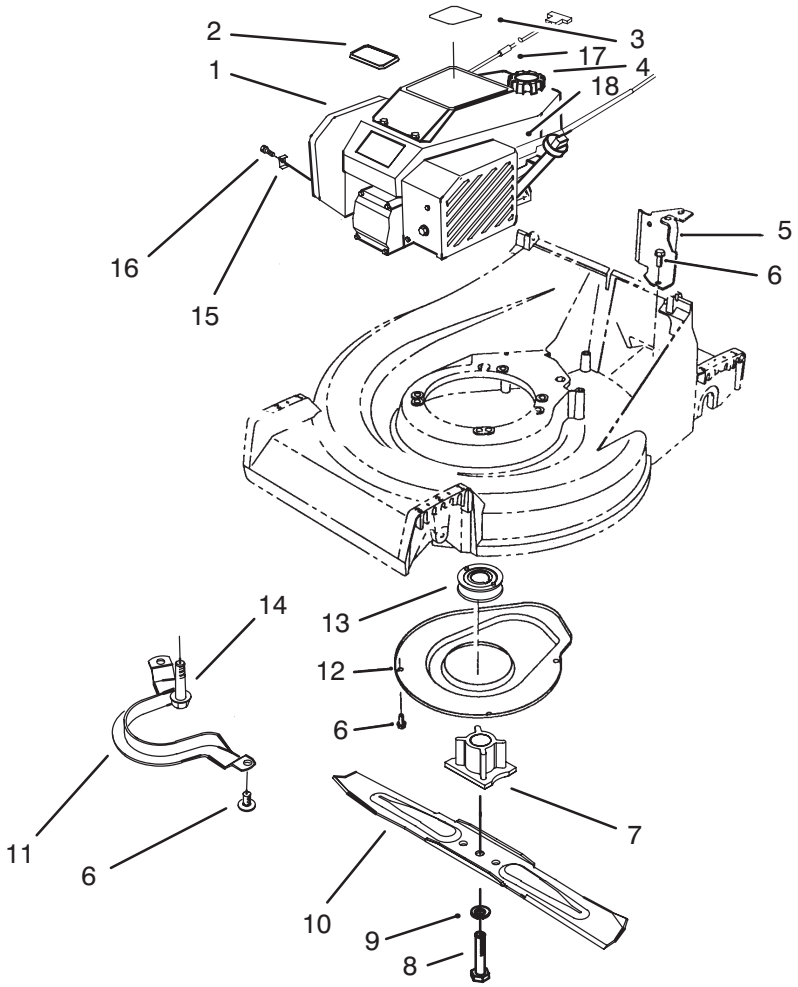


C–2084

# ENGINE ASSEMBLY

| Ref. No. | Part No. | Description | No. Used |
|---|---|---|---|
| 1 | 77–8953 | Engine | 1 |
| 2 | 92–2289 | Plate – TORO Logo | 1 |
| 3 | 93–4355 | Decal – Recoil | 1 |
| 4 | 93–7198 | Gas Cap Assembly | 1 |
| 5 | 66–0030 | Bracket – Cable Support | 1 |
| 6 | 32144–70 | Screw – Hex Hd. Cap | 7 |
| 7 | 62–7540 | Retainer – Blade | 1 |
| 8 | 26–0670 | Bolt – Blade | 1 |
| 9 | 3253–22 | Washer – Blade | 1 |

| Ref. No. | Part No. | Description | No. Used |
|---|---|---|---|
| 10 | 62–7700 | Blade – 21” | 1 |
| 11 | 66–0570 | Guide – Belt | 1 |
| 12 | 65–5200 | Cover | 1 |
| 13 | 62–7550 | Pulley – Engine | 1 |
| 14 | 32144–102 | Screw – Thread Forming | 3 |
| 15 | 2210–249 | Clamp – Throttle | 1 |
| 16 | 86–7990 | Screw – Clamp | 1 |
| 17 | 2210–316 | Stop – Rope | 1 |
| 18 | 77–9550 | Cover – Brake | 1 |

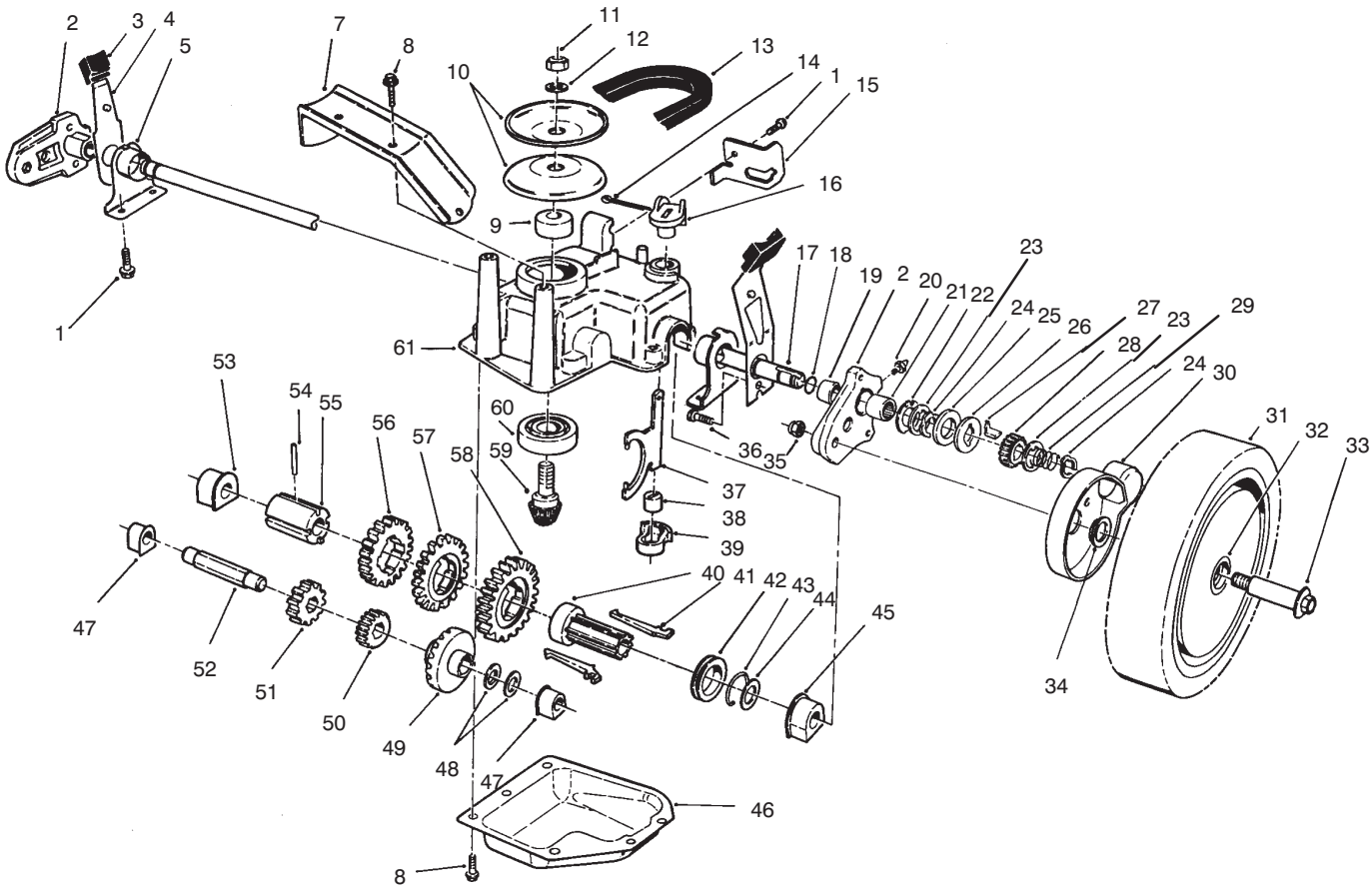


# GEAR CASE ASSEMBLY

| Ref. No. | Part No. | Description | No. Used |
|---|---|---|---|
| 1 | 32144–70 | Screw – Hex. Washer Hd. | 5 |
| 2 | 65–5042 | Pivot Arm Assembly (Incl. Ref. #19–21) | 2 |
| 3 | 25–7740 | Knob – Arm | 2 |
| 4 | 65–5440 | Spring Arm Assembly | 2 |
| 5 | 66–0360 | Cap – End | 2 |
| 7 | 65–5190 | Bracket – Belt Guide | 1 |
| 8 | 49–2040 | Screw – Self Tapping | 8 |
| 9 | 62–6660 | Spacer | 1 |
| 10 | 60–8840 | Pulley – Half | 2 |
| 11 | 3296–5 | Nut – Lock | 1 |
| 12 | 3256–24 | Washer – Flat | 1 |
| 13 | 36–8070 | V–Belt | 1 |
| 14 | 3272–5 | Pin – Cotter | 1 |
| 15 | 76–2930 | Retainer – Cable | 1 |
| 16 | 76–0920 | Lever – Shift | 1 |
| 17 | 65–4770 | Shaft – Output | 1 |
| 18 | 237–153 | Seal – "O"Ring | 2 |
| 19 | 70–9760 | Bushing – Sleeve | 2 |
| 20 | 302–56 | Fitting – Grease | 2 |
| 21 | 48–2060 | Bearing –Needle | 2 |
| 22 | 65–4730 | Washer – Thrust (Inner) | 2 |
| 23 | 65–4740 | Washer – Thrust (Keyed) | 4 |

| Ref. No. | Part No. | Description | No. Used |
|---|---|---|---|
| 24 | 65–2720 | Ring – Retaining | 4 |
| 25 | 65–4710 | Ring – Friction | 2 |
| 26 | 65–4760 | Washer –Clutch | 2 |
| 27 | 66–6050 | Key – Rocking (L.H.) | 1 |
| * | 66–6040 | Key – Rocking (R.H.) | 1 |
| 28 | 65–4750 | Pinion | 2 |
| 29 | 65–4720 | Spring – Compression | 2 |
| 30 | 74–1660 | Cover – Wheel | 2 |
| 31 | 14–9959 | Wheel Tire & Gear Assy. (Incl. Ref. #32) | 2 |
| 32 | 27–6250 | Bushing – Wheel | 4 |
| 33 | 27–6231 | Bolt – Wheel | 2 |
| 34 | 74–1670 | Spacer – Wheel Cover | 2 |
| 35 | 3296–6 | Nut – Lock | 2 |
| 36 | 65–5220 | Screw – Socket Hd. Cap | 2 |
| 37 | 60–8870 | Yoke – Shift | 1 |
| 38 | 29–9570 | Bushing – Yoke | 1 |
| 39 | 60–8810 | Retainer – Shift Fork | 1 |
| 40 | 76–0780 | Sleeve – Shift Key | 1 |
| 41 | 76–0760 | Key – Shift | 2 |
| 42 | 76–0770 | Collar – Shift | 1 |
| 43 | 65–5250 | Clip – Spring | 1 |
| 44 | 36–4780 | Washer – Thrust | 1 |

*Not Illustrated

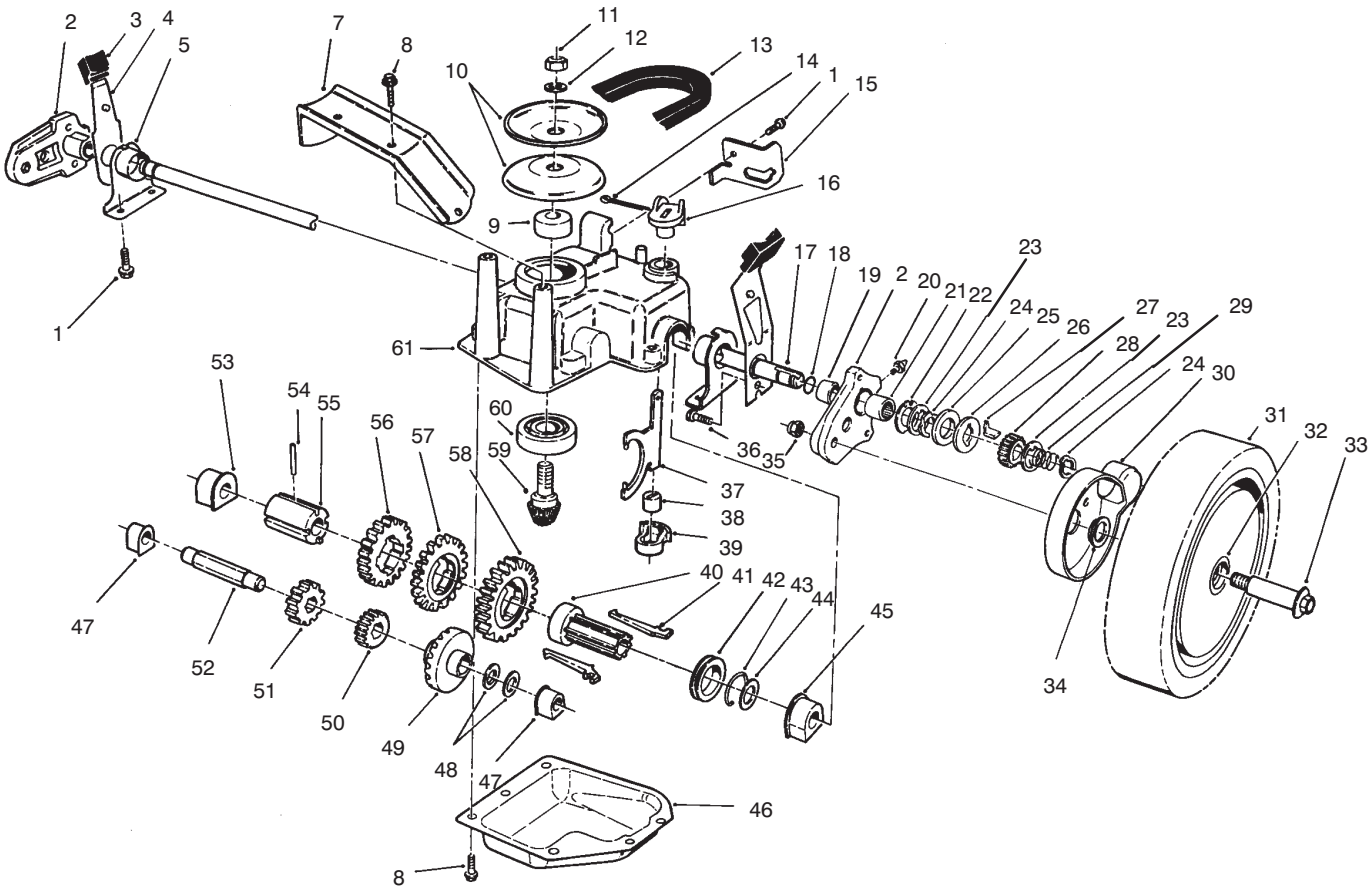


C–1555

# GEAR CASE ASSEMBLY (Continued)

| Ref. No. | Part No. | Description | No. Used |
|---|---|---|---|
| 45 | 60–8770 | Bushing – Output Shaft | 1 |
| 46 | 60–8730 | Cover – Gear Case | 1 |
| 47 | 60–8750 | Bushing – Intrmdt. Shaft | 2 |
| 48 | 36–4791 | Washer – Thrust | 2 |
| 49 | 55–3760 | Gear – Pinion 15T | 1 |
| 50 | 55–3780 | Gear – Pinion 20T | 1 |
| 51 | 55–3800 | Gear – Pinion 25T | 1 |
| 52 | 60–8800 | Shaft – Intermediate | 1 |
| 53 | 60–8850 | Bushing – Output Shaft | 1 |

| Ref. No. | Part No. | Description | No. Used |
|---|---|---|---|
| 54 | 32121–120 | Pin – Coil | 1 |
| 55 | 60–8790 | Sleeve – Gear | 1 |
| 56 | 55–3810 | Gear – 39T (3rd Gear) | 1 |
| 57 | 55–3790 | Gear – 44T (2nd Gear) | 1 |
| 58 | 55–3770 | Gear – 49T (1st Gear) | 1 |
| 59 | 60–8890 | Pinion – Bevel | 1 |
| 60 | 38–7820 | Bearing – Ball | 1 |
| 61 | 60–8710 | Case – Gear (Upper) | 1 |
| * | 62–6673 | Gear Case Assy. Complete | 1 |

*Not Illustrated

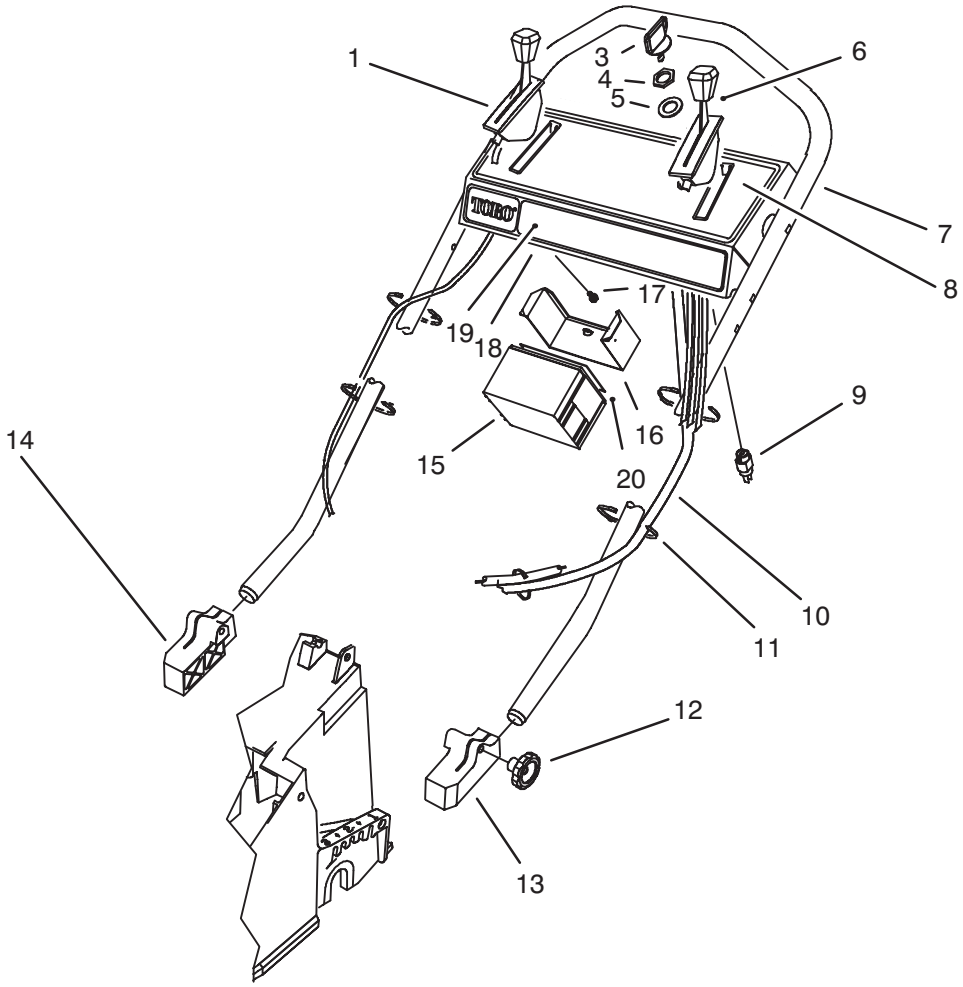


C–1583A

# HANDLE ASSEMBLY

| Ref. No. | Part No. | Description | No. Used |
|---|---|---|---|
| 1 | 93–6632 | Control – Ground Speed | 1 |
| 3 | 63–8360 | Key – Ignition | 1 |
| 4 | 218–461 | Nut – Lock | 1 |
| 5 | 3254–5 | Washer – Lock | 1 |
| 6 | 93–6631 | Control – Throttle | 1 |
| 7 | 93–6637 | Handle | 1 |
| 8 | 93–6660 | Decal – Instruction | 1 |
| 9 | 46–5780 | Switch – Starter (Incl. Ref. #4 & 5) | 1 |
| 10 | 80–4792 | Harness – Wire | 1 |
| 11 | 3290–378 | Tie – Cable | 5 |

| Ref. No. | Part No. | Description | No. Used |
|---|---|---|---|
| 12 | 19–4050 | Knob – Handle Release | 2 |
| 13 | 71–8090 | Mount – Handle L.H. | 1 |
| 14 | 71–8100 | Mount – Handle R.H. | 1 |
| 15 | 55–7520 | Battery | 1 |
| 16 | 55–8180 | Retainer – Battery | 1 |
| 17 | 92–9665 | Screw – Self Tapping | 5 |
| 18 | 16–8759 | Panel – Control (Incl. Ref. #8 & 19) | 1 |
| 19 | 71–9871 | Decal – TORO | 1 |
| 20 | 93–6668 | Decal – Battery | 1 |
| * | 22–4710 | Charger – Battery (220V) | 1 |

*Not Illustrated

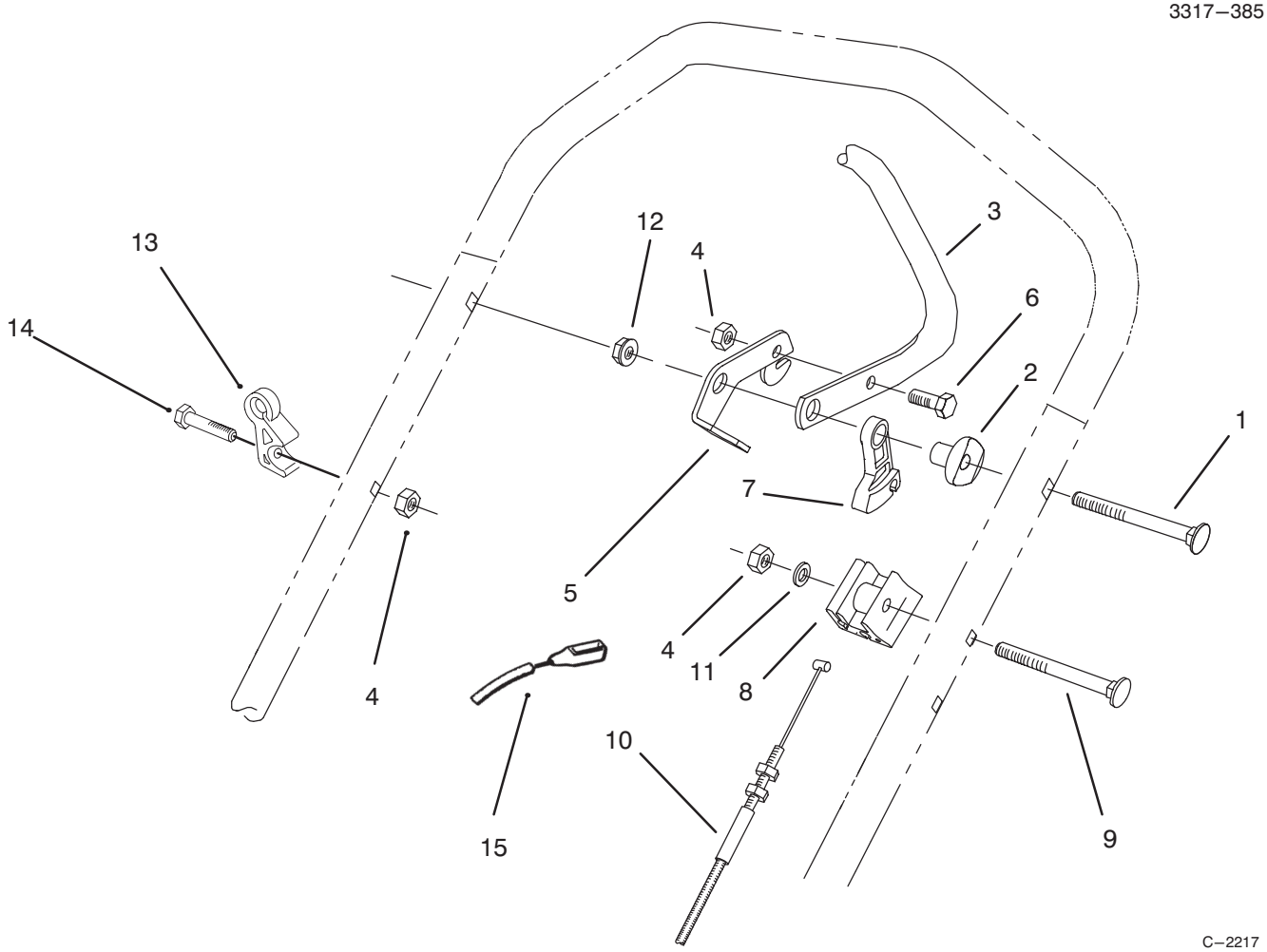


# TRACTION CONTROL ASSEMBLY

| Ref. No. | Part No. | Description | No. Used |
|---|---|---|---|
| 1 | 17–9426 | Screw – Handle | 2 |
| 2 | 66–0330 | Support – Spacer | 2 |
| 3 | 52–7430 | Control Bar Assembly | 1 |
| 4 | 3296–42 | Nut – Lock | 3 |
| 5 | 66–5350 | Lever – Control | 1 |
| 6 | 321–3 | Screw – Cap Hex. Hd. | 1 |
| 7 | 46–5520 | Lever – Traction | 1 |
| 8 | 71–0960 | Support – Cable | 1 |

| Ref. No. | Part No. | Description | No. Used |
|---|---|---|---|
| 9 | 46–6432 | Screw – Handle | 1 |
| 10 | 93–6634 | Cable – Traction | 1 |
| 11 | 3256–22 | Washer – Flat | 1 |
| 12 | 3296–58 | Nut – Lock | 2 |
| 13 | 93–3772 | Guide – Rope | 1 |
| 14 | 321–52 | Screw – Handle | 1 |
| 15 | 93–6628 | Cable – Brake | 1 |

3317–385

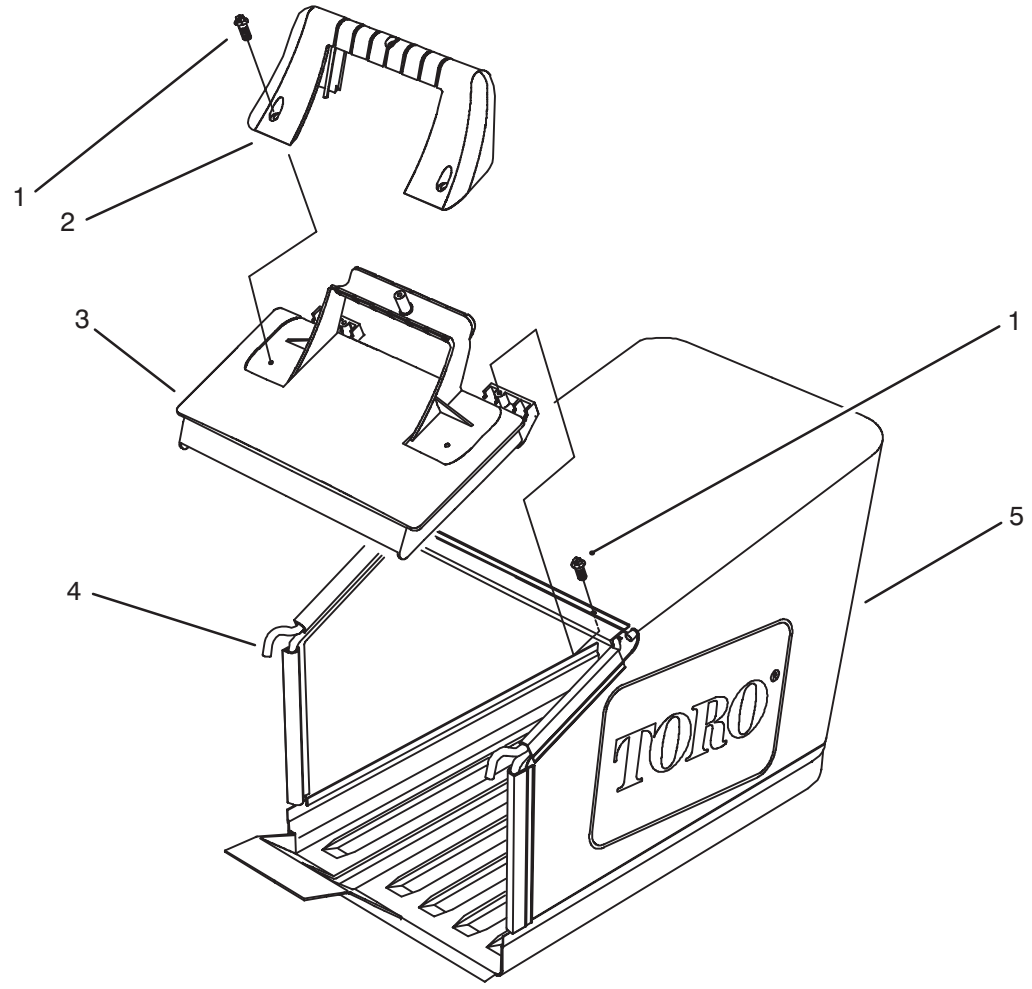


C–1570

# GRASS BAG ASSEMBLY

| Ref. No. | Part No. | Description | No. Used |
|---|---|---|---|
| 1 | 32144–111 | Screw – Index Hex Washer Head | 5 |
| 2 | 71–9480 | Handle – Door | 1 |
| 3 | 71–9470 | Door – Bag | 1 |
| 4 | 71–9930 | Frame – Grass Bag | 1 |
| 5 | 71–9680 | Bag – Grass 53cm | 1 |

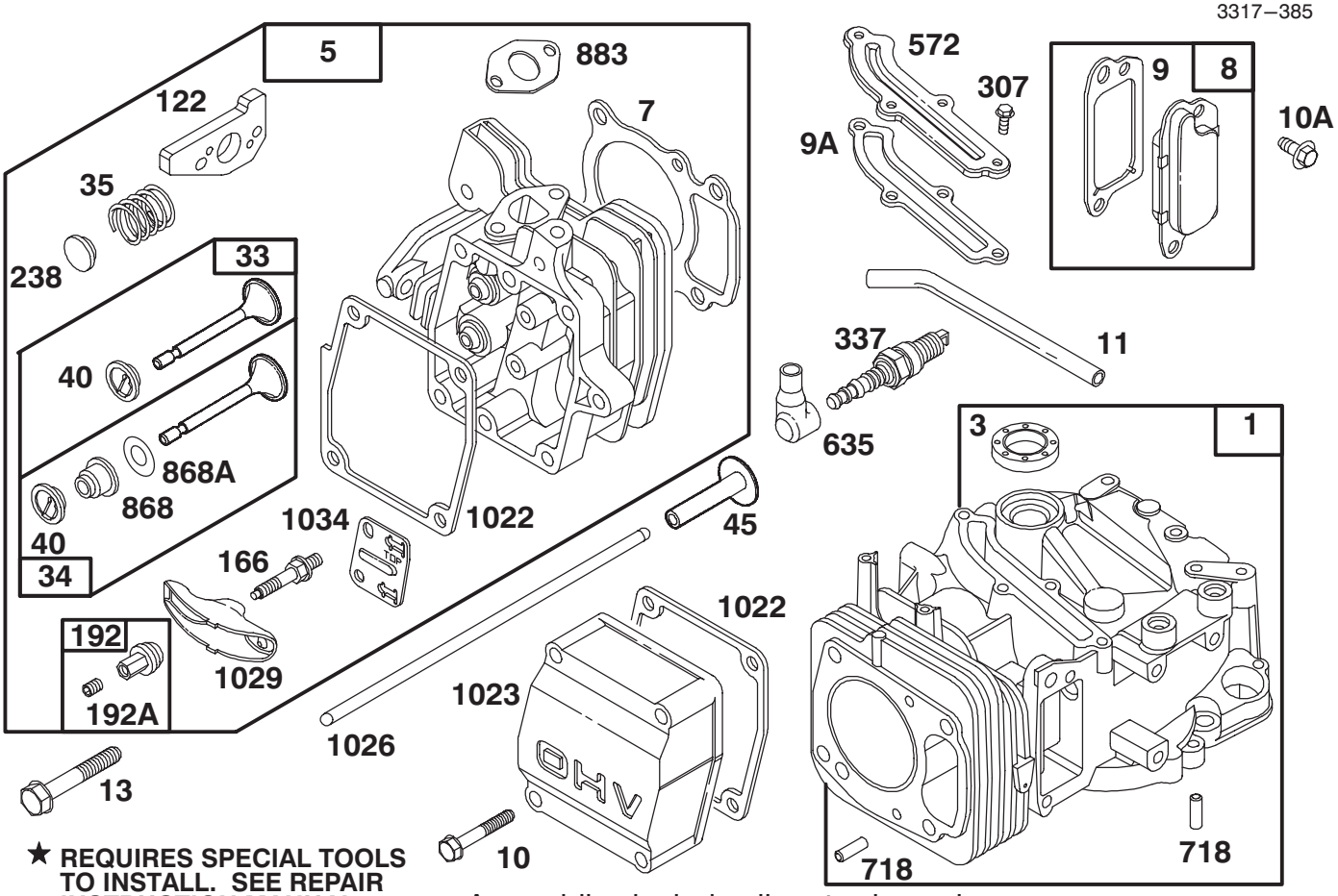


★ **REQUIRES SPECIAL TOOLS TO INSTALL. SEE REPAIR INSTRUCTION MANUAL.**

Assemblies include all parts shown in frames.

# ENGINE GTS–150

| Ref. No. | Part No. | Description | No. Used |
|---|---|---|---|
| 1 | 77–7590 | Cylinder Ass'y | 1 |
| ★3 | 77–9060 | Seal – Oil | 1 |
| 5 | 77–7730 | Head – Cylinder | 1 |
| ★7 | 77–7740 | Gasket – Cylinder Head | 1 |
| 8 | 77–9300 | Breather Ass'y | 1 |
| ★9 | 77–9250 | Gasket – Breather | 1 |
| ★9A | 77–7410 | Gasket – Breather | 1 |
| 10 | 77–7360 | Screw – Hex Head (Valve Cover) | 1 |
| 10A | 77–9200 | Screw – Hex Head | 1 |
| 11 | 77–9410 | Tube – Breather | 1 |
| 13 | 77–7630 | Screw – Cylinder Head | 1 |
| 33 | 77–7860 | Valve – Exhaust | 1 |
| 34 | 77–7880 | Valve – Intake | 1 |
| 35 | 77–7810 | Spring – Valve | 1 |
| 40 | 77–7870 | Retainer – Spring | 1 |
| 45 | 77–7610 | Tappet – Valve | 1 |
| ●122 | 77–7820 | Adapter Ass'y | 1 |
| 166 | 77–7780 | Stud – Rocker Arm | 1 |

| Ref. No. | Part No. | Description | No. Used |
|---|---|---|---|
| 192 | 77–7910 | Ball & Screw – Rocker Arm | 1 |
| 192A | 77–9310 | Screw – Set | 1 |
| 238 | 77–7800 | Cap – Valve | 1 |
| 307 | 77–7420 | Screw – Breather Cover Mtg. | 1 |
| 337 | 77–7330 | Plug – Spark | 1 |
| 572 | 77–7400 | Cover – Breather | 1 |
| 635 | 77–7340 | Elbow – Spark Plug | 1 |
| 718 | 77–7600 | Pin – Cylinder | 1 |
| ★868 | 77–7890 | Seal Ass'y – Valve | 1 |
| ★868A | 77–7900 | Gasket – Valve | 1 |
| ★883 | 77–7760 | Gasket – Exhaust | 1 |
| ★1022 | 77–7320 | Gasket – Rocker Cover | 1 |
| 1023 | 77–9320 | Cover – Valve | 1 |
| 1026 | 77–7620 | Rod – Push | 1 |
| 1029 | 77–7790 | Arm – Rocker | 1 |
| 1034 | 77–7770 | Guide – Push Rod | 1 |
| | 77–9020 | Short Block | 1 |

★ Included in Gasket Set–Part No. 77–8900
● Included in Carburetor Overhaul Kit–Part No. 77–8920

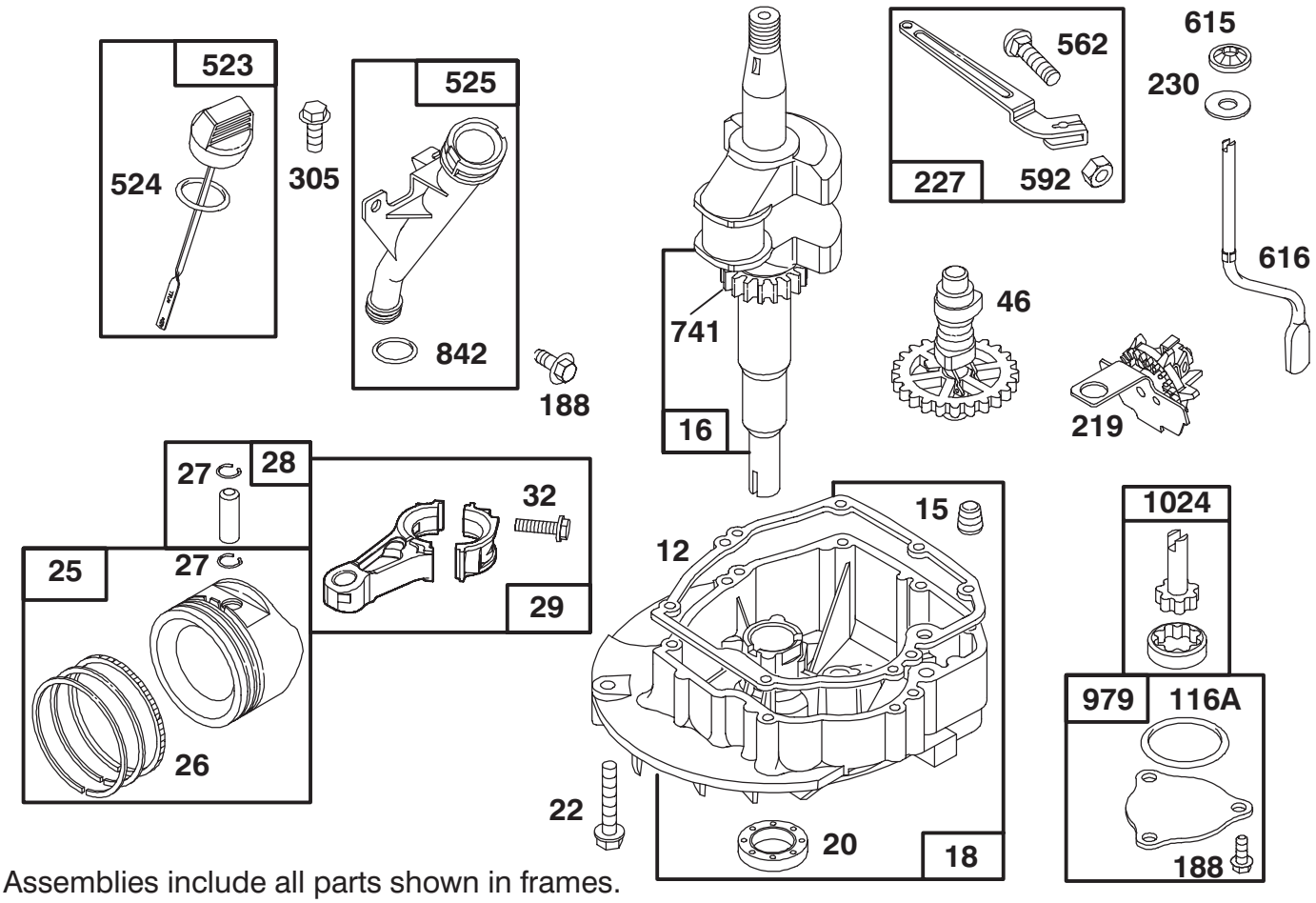


Assemblies include all parts shown in frames.

# ENGINE GTS–150

| Ref. No. | Part No. | Description | No. Used |
|---|---|---|---|
| ★12 | 77–7550 | Gasket – Engine Base | 1 |
| 15 | 77–9240 | Plug – Pipe | 1 |
| 16 | 77–9330 | Crankshaft | 1 |
| | | **Note:** Order Part No. 77–7540 For Timing Gear Key | 1 |
| 18 | 77–7560 | Base – Engine | 1 |
| ★20 | 77–7570 | Seal – Oil | 1 |
| 22 | 77–9070 | Screw – Engine Base | 1 |
| 25 | 77–7690 | Piston Ass'y (Std.) | 1 |
| 26 | 77–7700 | Ring Set (Std.) | 1 |
| 27 | 77–7710 | Lock – Piston Pin | 1 |
| 28 | 77–9340 | Pin Ass'y – Piston | 1 |
| 29 | 77–7670 | Rod – Connecting | 1 |
| 32 | 77–9350 | Screw – Conn. Rod | 1 |
| 46 | 77–7490 | Gear – Cam | 1 |
| ★116A | 77–7660 | O-Ring | 1 |

| Ref. No. | Part No. | Description | No. Used |
|---|---|---|---|
| 188 | 77–9360 | Screw – Hex Head | 1 |
| 219 | 77–7500 | Gear – Governor | 1 |
| 227 | 77–7370 | Lever Ass'y – Governor | 1 |
| 230 | 77–7470 | Washer | 1 |
| 305 | 77–8310 | Screw – Hex Head | 1 |
| 523 | 77–7260 | Dipstick – Oil | 1 |
| ★524 | 77–7270 | Seal – O-Ring | 1 |
| 525 | 77–7280 | Tube – Oil Filler | 1 |
| 562 | 77–7380 | Bolt – Governor Lever | 1 |
| 592 | 77–7390 | Nut – Hex | 1 |
| 615 | 77–7480 | Pushnut | 1 |
| 616 | 77–7460 | Crank – Governor | 1 |
| 741 | 77–7530 | Gear – Timing | 1 |
| ★842 | 77–7300 | Seal – O-Ring | 1 |
| 979 | 77–7650 | Cover – Oil Pump | 1 |
| 1024 | 77–7640 | Pump – Oil | 1 |

★ Included in Gasket Set–Part No. 77–8900

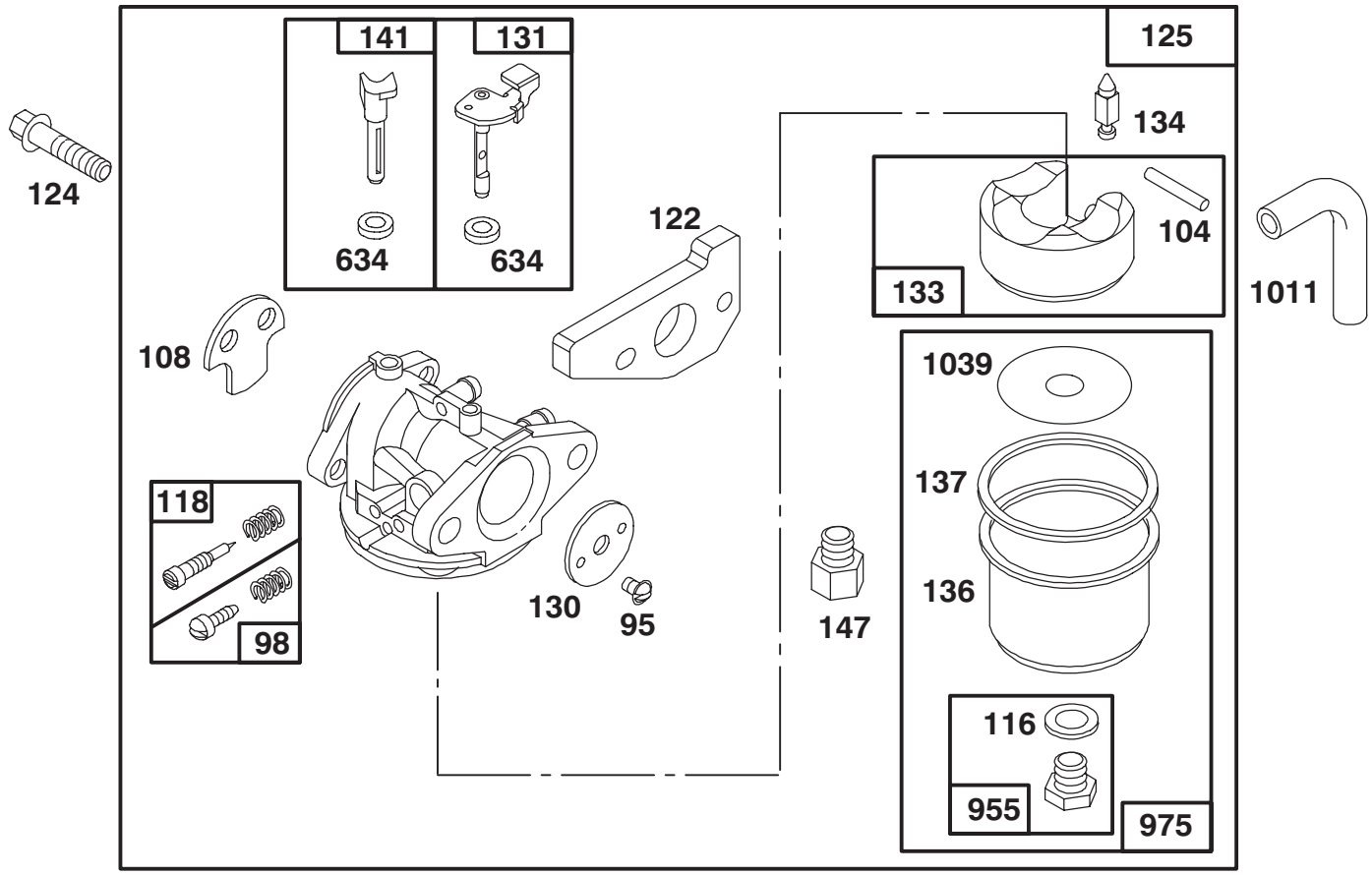


Assemblies include all parts shown in frames.

# ENGINE GTS–150

| Ref. No. | Part No. | Description | No. Used |
|---|---|---|---|
| 95 | 77–8090 | Screw – Valve Mtg. | 1 |
| 98 | 77–8240 | Screw – Idle Adj. | 1 |
| ●104 | 77–8180 | Pin – Float Hinge | 1 |
| 108 | 77–8070 | Valve – Choke | 1 |
| ●◆116 | 77–8210 | Sealing – Gasket | 1 |
| ●118 | 77–8230 | Valve & Spring – Needle | 1 |
| ●122 | 77–7820 | Adapter Ass'y | 1 |
| 124 | 77–7970 | Screw – Hex Head (Carb. Mtg.) | 1 |
| 125 | 77–8050 | Carburetor Ass'y | 1 |
| 130 | 77–8080 | Valve – Throttle | 1 |
| 131 | 77–8160 | Shaft – Throttle | 1 |
| 133 | 77–8170 | Float – Carburetor | 1 |
| ●134 | 77–8110 | Valve – Inlet (Includes Seat) | 1 |

| Ref. No. | Part No. | Description | No. Used |
|---|---|---|---|
| 136 | 77–7240 | Bowl – Fuel | 1 |
| ●◆137 | 77–8200 | Gasket – Float Bowl | 1 |
| 141 | 77–8130 | Shaft – Choke | 1 |
| 147 | 77–8120 | Adapter – Jet **Note:** For High Altitude Jet Order Part No. 77–9000 | 1 |
| ◆634 | 77–8150 | Washer – Seal | 1 |
| 955 | 77–8220 | Screw – Hex Head | 1 |
| 975 | 77–8190 | Bowl Ass'y – Carburetor | 1 |
| 1011 | 77–8040 | Tube – Vent | 1 |
| ●1039 | 77–7250 | Limiter – Float | 1 |

●Incl. in Carburetor Overhaul Kit–Part No. 77–8920
◆Included in Carburetor Gasket Set–Part No. 77–8930

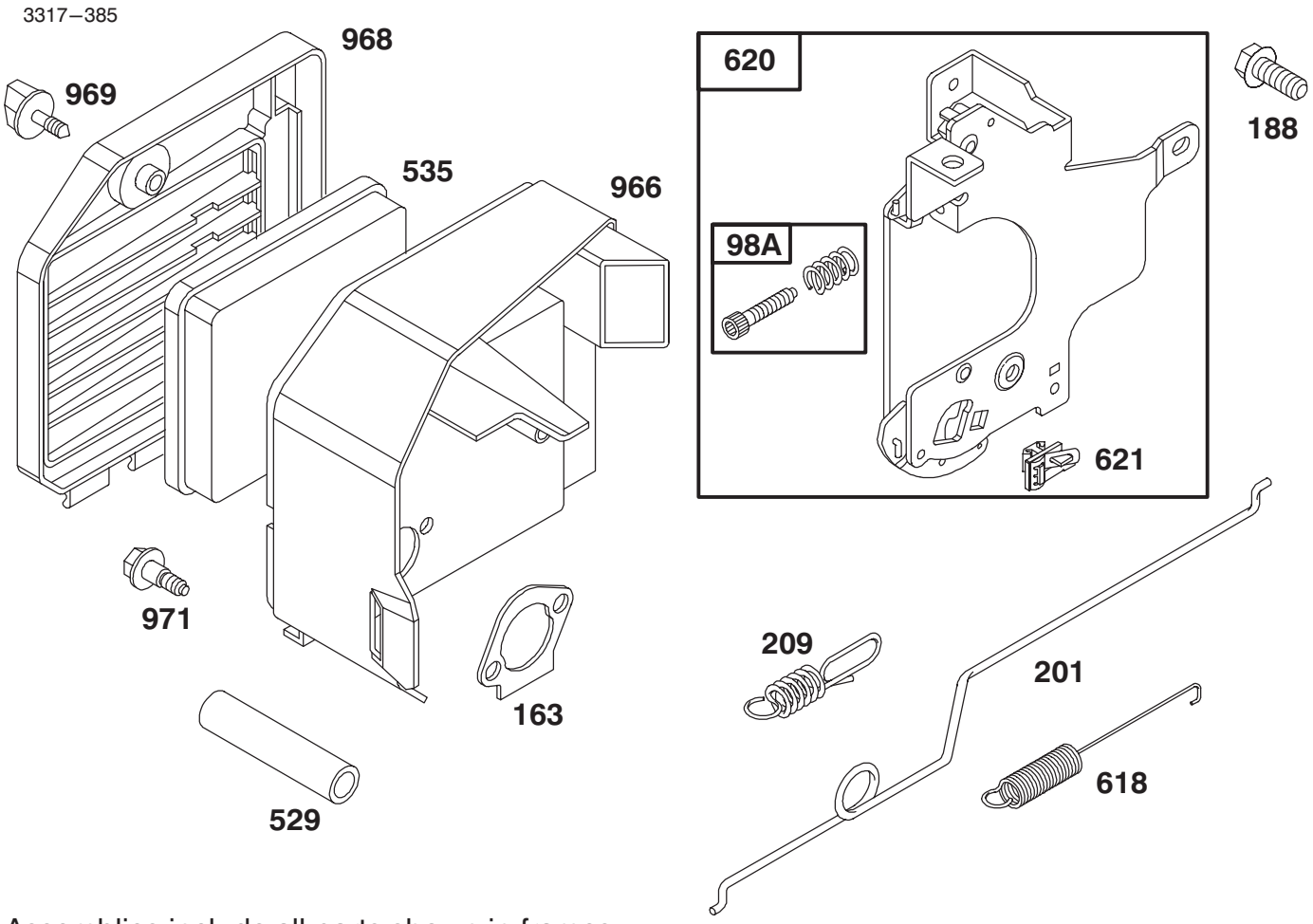


Assemblies include all parts shown in frames.

# ENGINE GTS–150

| Ref. No. | Part No. | Description | No. Used |
|---|---|---|---|
| 98A | 77–8020 | Screw Ass'y – Speed Adj. | 1 |
| ★163 | 77–7960 | Gasket – Air Cleaner | 1 |
| 188 | 77–9360 | Screw – Hex. Head | 1 |
| 201 | 77–7980 | Link – Governor | 1 |
| 209 | 77–7990 | Spring – Governor | 1 |
| 529 | 77–9470 | Tube – Breather | 1 |
| 535 | 77–7950 | Element – Filter | 1 |

| Ref. No. | Part No. | Description | No. Used |
|---|---|---|---|
| 618 | 77–8140 | Spring – Choke | 1 |
| 620 | 77–8000 | Bracket – Carburetor | 1 |
| 621 | 77–8010 | Switch – Stop | 1 |
| 966 | 77–7940 | Base – Air Cleaner | 1 |
| 968 | 77–7040 | Cover – Air Cleaner | 1 |
| 969 | 77–7920 | Screw – Air Cleaner | 1 |
| 971 | 77–7930 | Screw – Air Cleaner | 1 |

★ Included in Gasket Set–Part No. 77–8900

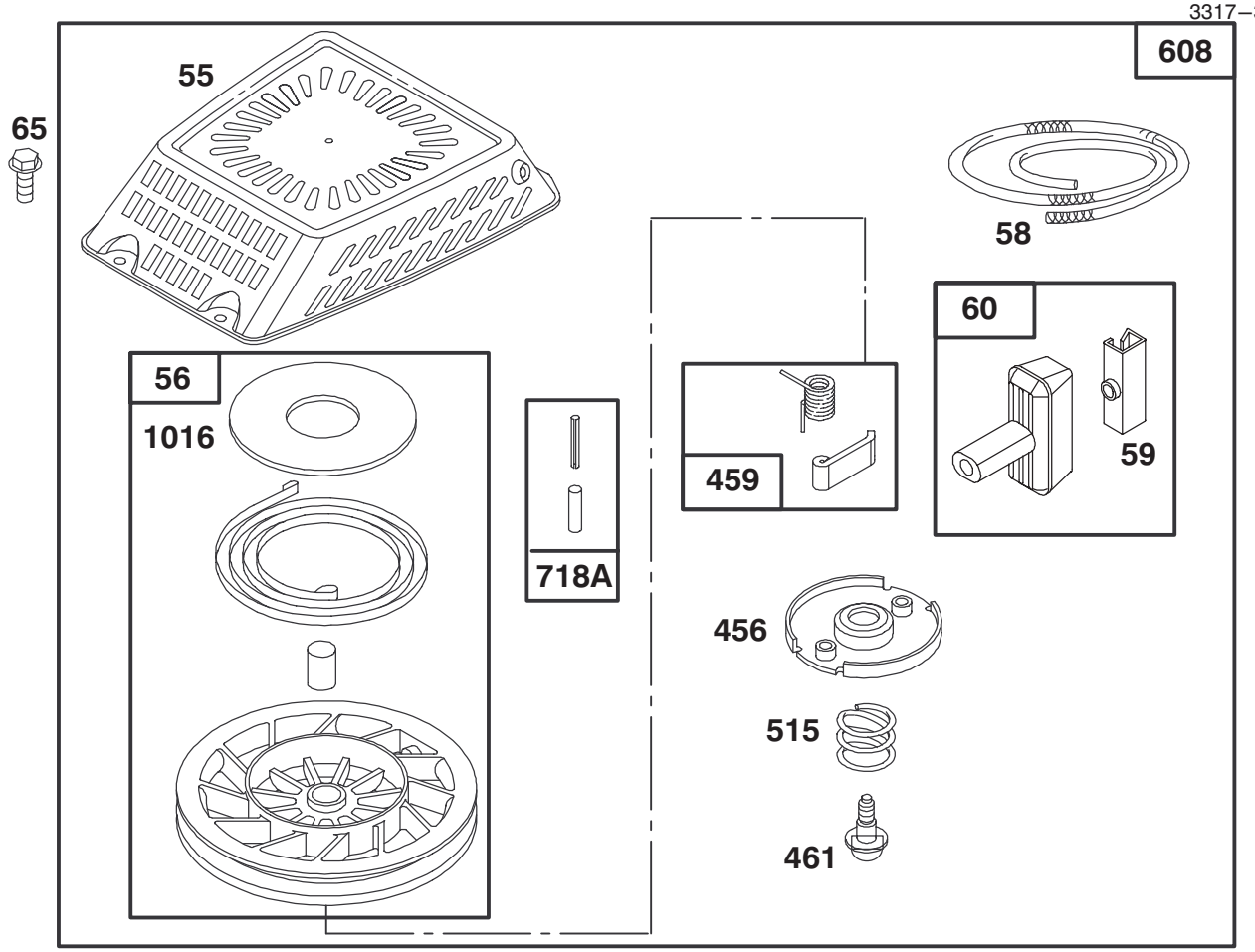


Assemblies include all parts shown in frames.

# ENGINE GTS–150

| Ref. No. | Part No. | Description | No. Used |
|---|---|---|---|
| 55 | 77–8890 | Housing – Rewind Starter | 1 |
| 56 | 77–9270 | Pulley – Rewind Starter | 1 |
| 58 | 77–8480 | Rope – Starter (Cut To Suit) | 1 |
| 59 | 77–7210 | Insert – Rewind Handle | 1 |
| 60 | 77–8520 | Handle – Rewind Starter | 1 |
| 65 | 77–8300 | Screw – Hex Head | 1 |

| Ref. No. | Part No. | Description | No. Used |
|---|---|---|---|
| 456 | 77–8470 | Retainer – Rewind Starter | 1 |
| 459 | 77–8530 | Pawl – Starter | 1 |
| 461 | 77–8490 | Screw – Rewind Starter | 1 |
| 515 | 77–8500 | Spring – Torsion | 1 |
| 608 | 77–8840 | Starter Ass'y – Rewind | 1 |
| 718A | 77–8550 | Pin – Spring | 1 |
| 1016 | 77–8570 | Cover – Spring | 1 |

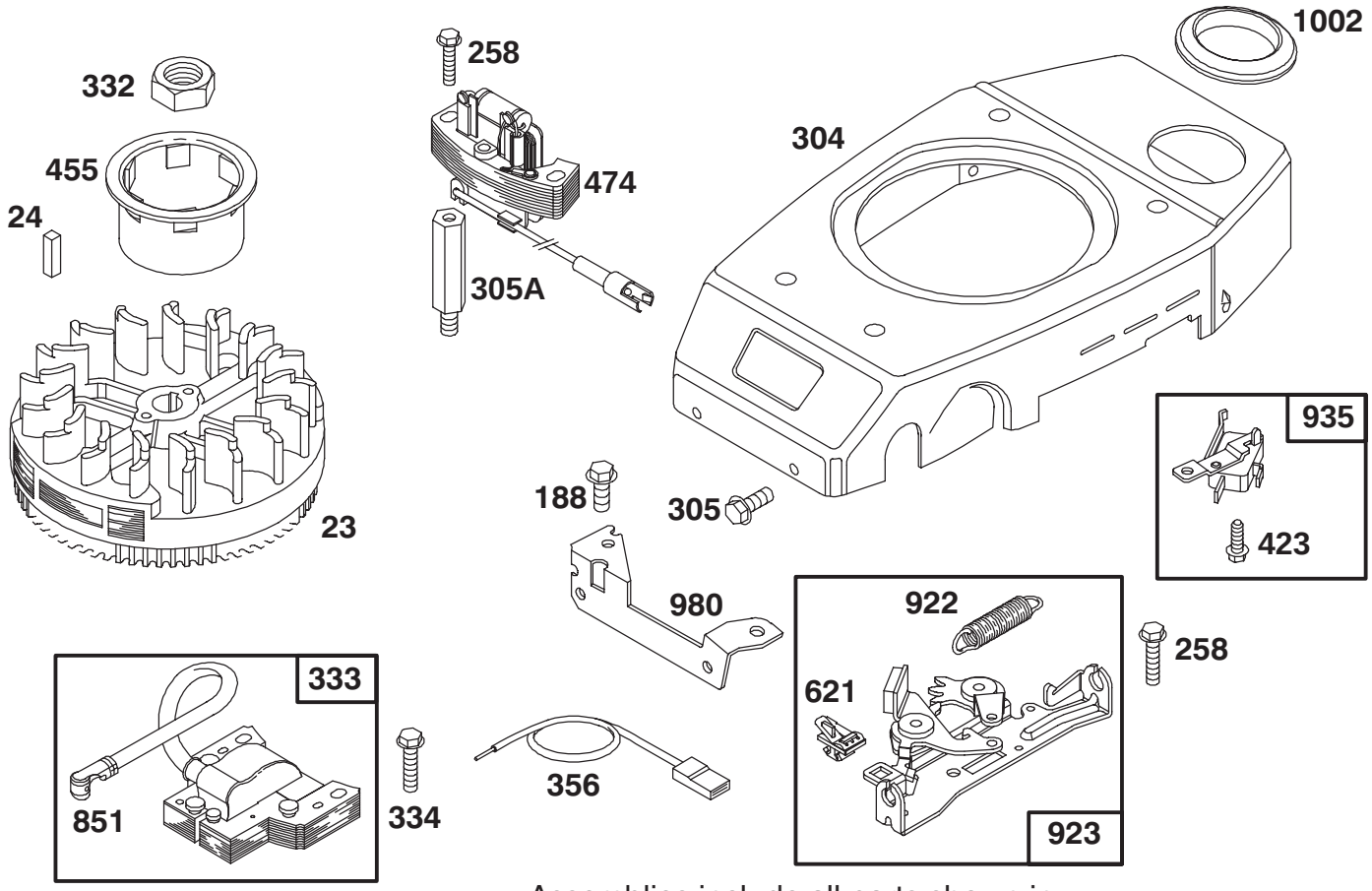


Assemblies include all parts shown in frames.

# ENGINE GTS–150

| Ref. No. | Part No. | Description | No. Used |
|---|---|---|---|
| 23 | 77–8320 | Flywheel | 1 |
| 24 | 77–8340 | Key – Flywheel | 1 |
| 188 | 77–9360 | Screw – Hex Head | 1 |
| 258 | 77–8870 | Screw – Hex Head | 1 |
| 304 | 77–9480 | Housing – Blower | 1 |
| 305 | 77–8310 | Screw – Hex Head | 1 |
| 305A | 77–8390 | Stud | 1 |
| 332 | 77–8360 | Nut – Flywheel | 1 |
| 333 | 77–8420 | Armature – Magneto | 1 |
| 334 | 77–7420 | Screw – Armature Mtg. | 1 |
| 356 | 77–8400 | Wire – Ground | 1 |

| Ref. No. | Part No. | Description | No. Used |
|---|---|---|---|
| 423 | 77–9520 | Screw – Hex Head | 1 |
| 455 | 77–8350 | Cup – Starter | 1 |
| 474 | 77–8370 | Alternator | 1 |
| 621 | 77–8010 | Switch – Stop | 1 |
| 851 | 77–9450 | Terminal – Spark Plug | 1 |
| 922 | 77–8860 | Spring –Brake | 1 |
| 923 | 77–9460 | Brake Ass'y | 1 |
| 935 | 77–9530 | Switch – Starter | 1 |
| 980 | 77–7140 | Bracket – Blower Housing | 1 |
| 1002 | 77–7180 | Grommet | 1 |

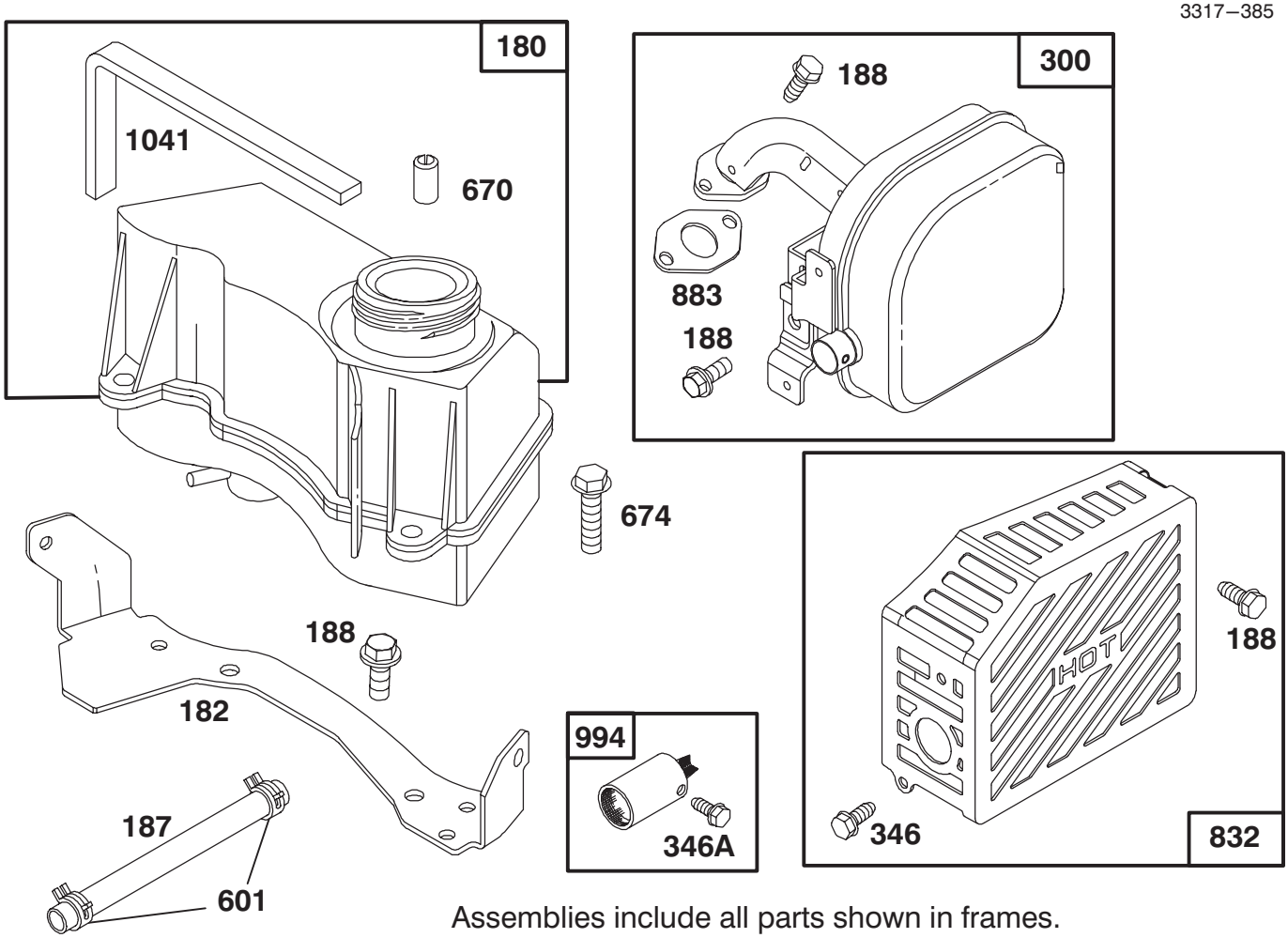


Assemblies include all parts shown in frames.

# ENGINE GTS–150

| Ref. No. | Part No. | Description | No. Used |
|---|---|---|---|
| 180 | 77–7580 | Tank Ass'y – Fuel | 1 |
| 182 | 77–7170 | Bracket – Fuel Tank | 1 |
| 187 | 77–8620 | Hose – Fuel (Cut To Suit) | 1 |
| 188 | 77–9360 | Screw – Hex Head | 1 |
| 300 | 77–8640 | Muffler – Exhaust | 1 |
| 346 | 77–9430 | Screw – Hex | 1 |
| 346A | 77–9050 | Screw – Arrester Mtg. | 1 |

| Ref. No. | Part No. | Description | No. Used |
|---|---|---|---|
| 601 | 77–8630 | Clamp – Fuel Hose | 1 |
| 670 | 77–9030 | Spacer – Fuel Tank (Includes 2) | 1 |
| 674 | 77–8600 | Screw – Tank Mtg. | 1 |
| 832 | 77–8660 | Guard – Muffler | 1 |
| ★883 | 77–7760 | Gasket – Exhaust | 1 |
| 994 | 77–9040 | Arrester – Spark | 1 |
| ★1041 | 77–8590 | Seal – Foam | 1 |

★ Included in Gasket Set–Part No. 77–8900

3317–385

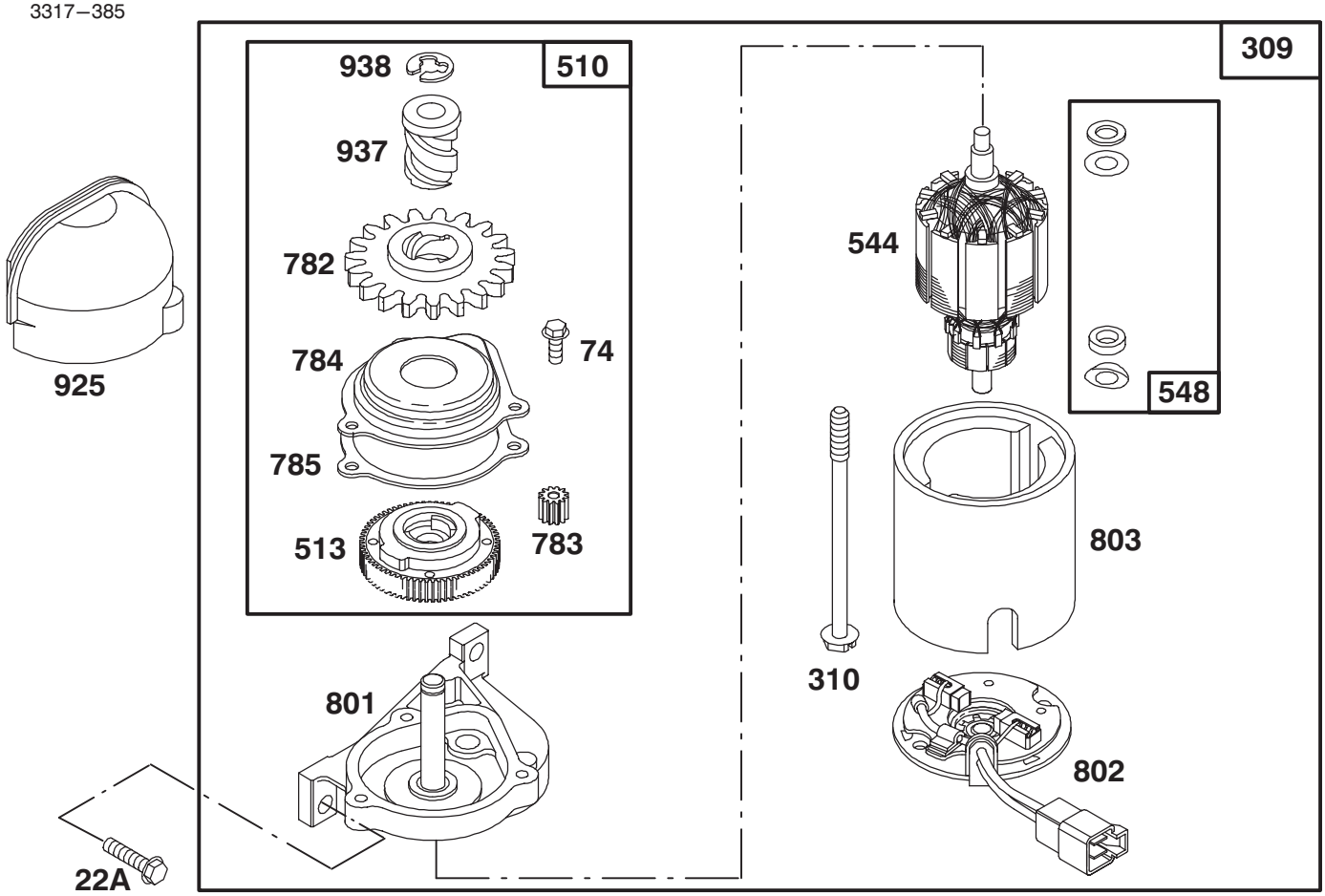


Assemblies include all parts shown in frames.

# ENGINE GTS–150

| Ref. No. | Part No. | Description | No. Used |
|---|---|---|---|
| 22A | 77–8720 | Screw–Hex Head | 1 |
| 74 | 77–8800 | Screw–Hex Head | 1 |
| 309 | 77–8670 | Motor–Starter | 1 |
| 310 | 77–8710 | Screw–Hex Head | 1 |
| 510 | 77–8910 | Drive Kit | 1 |
| 513 | 77–8770 | Clutch Assembly | 1 |
| 544 | 77–8730 | Armature Assembly | 1 |
| 548 | 77–8740 | Washer Set | 1 |
| 782 | 77–8810 | Pinion–Starter | 1 |

| Ref. No. | Part No. | Description | No. Used |
|---|---|---|---|
| 783 | 77–9540 | Gear – Pinion | 1 |
| 784 | 77–8780 | Cover–Gear | 1 |
| 785 | 77–8790 | Gasket–Cover | 1 |
| 801 | 77–8680 | Bracket Assembly | 1 |
| 802 | 77–8690 | Head Assembly | 1 |
| 803 | 77–8700 | Shell and Magnet Ass'y | 1 |
| 925 | 77–7200 | Cover–Starter | 1 |
| 937 | 77–8820 | Spline–Starter | 1 |
| 938 | 77–8830 | Retainer–Lock | 1 |

★ Included in Gasket Set–Part No. 77–8900

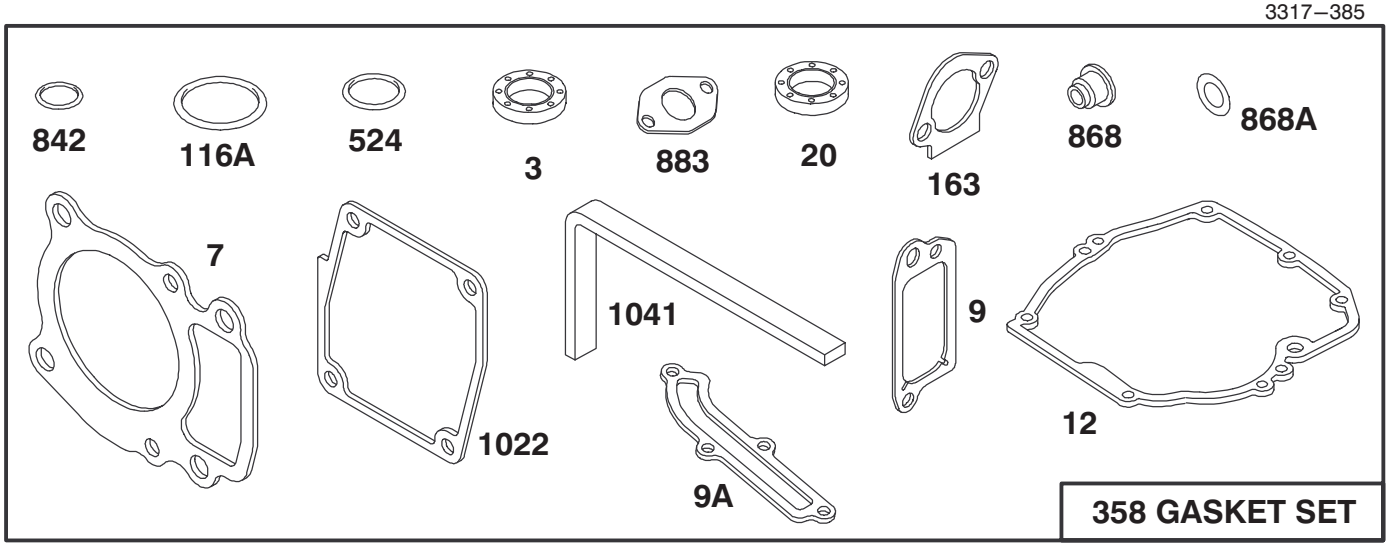


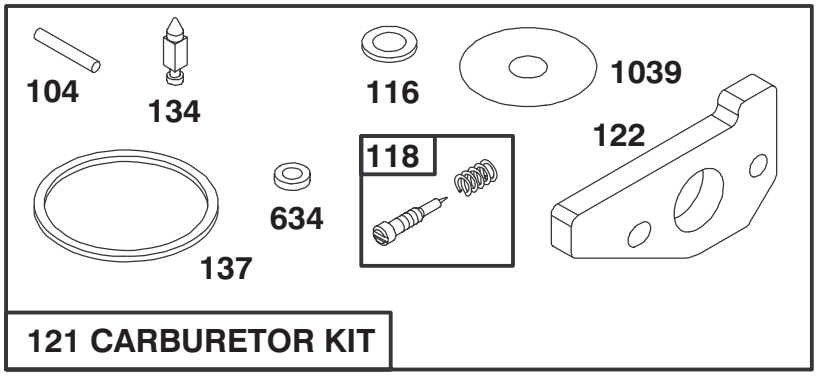


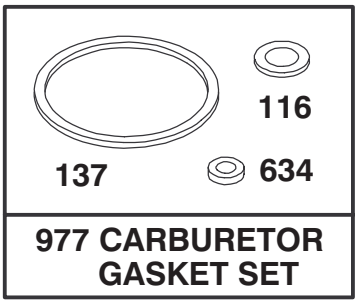


Assemblies include all parts shown in frames.

# ENGINE GTS–150

| Ref. No. | Part No. | Description | No. Used |
|---|---|---|---|
| ★3 | 77–9060 | Seal – Oil | 1 |
| ★7 | 77–7740 | Gasket – Cylinder Head | 1 |
| ★9 | 77–9250 | Gasket – Breather | 1 |
| ★9A | 77–7410 | Gasket – Breather | 1 |
| ★12 | 77–7550 | Gasket – Engine Base | 1 |
| ★20 | 77–7570 | Seal – Oil | 1 |
| ●104 | 77–8180 | Pin – Float Hinge | 1 |
| ●◆116 | 77–7660 | Gasket – Sealing | 1 |
| ★116A | 77–8210 | O-Ring | 1 |
| ●118 | 77–8230 | Valve and Spring – Needle | 1 |
| 121 | 77–8920 | Carburetor Kit | 1 |
| ●122 | 77–7820 | Adapter Assembly | 1 |
| ●134 | 77–8110 | Valve – Inlet (Includes Seat) | 1 |

| Ref. No. | Part No. | Description | No. Used |
|---|---|---|---|
| ●◆137 | 77–8200 | Gasket – Float Bowl | 1 |
| ★163 | 77–7960 | Gasket – Air Cleaner | 1 |
| 358 | 77–8900 | Gasket Set | 1 |
| ★524 | 77–7270 | Seal – O-Ring | 1 |
| ◆634 | 77–8150 | Washer – Seal | 1 |
| ★842 | 77–7300 | Seal – O-Ring | 1 |
| ★868 | 77–7890 | Seal Assy. – Valve | 1 |
| ★868A | 77–7900 | Seal – Valve | 1 |
| ★883 | 77–7760 | Gasket – Exhaust | 1 |
| 977 | 77–8930 | Carburetor Gasket Set | 1 |
| ★1022 | 77–7320 | Gasket – Rocker Cover | 1 |
| ●1039 | 77–7250 | Limiter – Float | 1 |
| ★1041 | 77–8590 | Seal – Foam | 1 |

●Included in Carburetor Kit–Part No. 77–8920
◆Incl. in Carburetor Gasket Set–Part No. 77–8930

★ Included in Gasket Set–Part No. 77–8900

# TORO PART NUMBER INDEX

| Part No. | Description | Pg. No. | Ref. No. | Qty. |
|---|---|---|---|---|
| 14–9949 | Wheel & Tire Assembly | 1 | 20 | 2 |
| 14–9959 | Wheel Tire & Gear Assy. | 4 | 31 | 2 |
| 16–1769 | Housing – 53cm | 1 | 4 | 1 |
| 16–8759 | Panel Control | 6 | 18 | 1 |
| 17–9426 | Screw – Handle | 7 | 1 | 2 |
| 19–4050 | Knob – Handle Release | 6 | 12 | 2 |
| 22–4710 | Charger – Battery (220V) | 6 | * | 1 |
| 25–7740 | Knob – Arm | 4 | 3 | 2 |
| 25–7740 | Knob – Arm | 1 | 28 | 2 |
| 26–0670 | Bolt – Blade | 3 | 8 | 1 |
| 27–6231 | Bolt – Wheel | 1 | 22 | 2 |
| 27–6231 | Bolt – Wheel | 4 | 33 | 2 |
| 27–6250 | Bushing – Wheel | 1 | 21 | 4 |
| 27–6250 | Bushing – Wheel | 4 | 32 | 4 |
| 29–9570 | Bushing – Yoke | 4 | 38 | 1 |
| 36–4780 | Washer – Thrust | 4 | 44 | 1 |
| 36–4791 | Washer – Thrust | 5 | 48 | 2 |
| 36–8070 | V–Belt | 4 | 13 | 1 |
| 38–7820 | Bearing – Ball | 5 | 60 | 1 |
| 40–1940 | Washer – Wheel Bolt | 1 | 23 | 4 |
| 46–5520 | Lever – Traction | 7 | 7 | 1 |
| 46–5780 | Switch – Starter | 6 | 9 | 1 |
| 46–6432 | Screw – Handle | 7 | 9 | 1 |
| 48–2060 | Bearing –Needle | 4 | 21 | 2 |
| 49–2040 | Screw – Self Tapping | 4 | 8 | 8 |
| 52–7430 | Control Bar Assembly | 7 | 3 | 1 |
| 55–3760 | Gear – Pinion 15T | 5 | 49 | 1 |
| 55–3770 | Gear – 49T (1st Gear) | 5 | 58 | 1 |
| 55–3780 | Gear – Pinion 20T | 5 | 50 | 1 |
| 55–3790 | Gear – 44T (2nd Gear) | 5 | 57 | 1 |
| 55–3800 | Gear – Pinion 25T | 5 | 51 | 1 |
| 55–3810 | Gear – 39T (3rd Gear) | 5 | 56 | 1 |
| 55–7520 | Battery | 6 | 15 | 1 |
| 55–8180 | Retainer – Battery | 6 | 16 | 1 |
| 60–8710 | Case – Gear (Upper) | 5 | 61 | 1 |
| 60–8730 | Cover – Gear Case | 5 | 46 | 1 |
| 60–8750 | Bushing – Intrmdt. Shaft | 5 | 47 | 2 |
| 60–8770 | Bushing – Output Shaft | 5 | 45 | 1 |
| 60–8790 | Sleeve – Gear | 5 | 55 | 1 |
| 60–8800 | Shaft – Intermediate | 5 | 52 | 1 |
| 60–8810 | Retainer – Shift Fork | 4 | 39 | 1 |
| 60–8840 | Pulley – Half | 4 | 10 | 2 |
| 60–8850 | Bushing – Output Shaft | 5 | 53 | 1 |
| 60–8870 | Yoke – Shift | 4 | 37 | 1 |
| 60–8890 | Pinion – Bevel | 5 | 59 | 1 |
| 62–6660 | Spacer | 4 | 9 | 1 |
| 62–6673 | Gear Case Assy. Complete | 5 | * | 1 |
| 62–7540 | Retainer – Blade | 3 | 7 | 1 |
| 62–7550 | Pulley – Engine | 3 | 13 | 1 |
| 62–7700 | Blade – 21 | 3 | 10 | 1 |
| 63–8360 | Key – Ignition | 6 | 3 | 1 |
| 65–2720 | Ring – Retaining | 4 | 24 | 4 |
| 65–4710 | Ring – Friction | 4 | 25 | 2 |
| 65–4720 | Spring – Compression | 4 | 29 | 2 |
| 65–4730 | Washer – Thrust (Inner) | 4 | 22 | 2 |
| 65–4740 | Washer – Thrust (Keyed) | 4 | 23 | 4 |
| 65–4750 | Pinion | 4 | 28 | 2 |
| 65–4760 | Washer –Clutch | 4 | 26 | 2 |
| 65–4770 | Shaft – Output | 4 | 17 | 1 |
| 65–5042 | Pivot Arm Assembly | 4 | 2 | 2 |
| 65–5190 | Bracket – Belt Guide | 4 | 7 | 1 |
| 65–5200 | Cover | 3 | 12 | 1 |
| 65–5210 | Screw – Thread Forming | 1 | 7 | 2 |
| 65–5220 | Screw – Cap Socket Hd. | 1 | 26 | 2 |
| 65–5220 | Screw – Socket Hd. Cap | 4 | 36 | 2 |
| 65–5250 | Clip – Spring | 4 | 43 | 1 |
| 65–5440 | Spring Arm Assembly | 4 | 4 | 2 |
| 65–5660 | Panel – Screen | 1 | 2 | 1 |
| 66–0020 | Panel – Vertical | 1 | 1 | 1 |
| 66–0030 | Bracket – Cable Support | 3 | 5 | 1 |
| 66–0330 | Support – Spacer | 7 | 2 | 2 |
| 66–0360 | Cap – End | 4 | 5 | 2 |
| 66–0540 | Arm – Spring Front | 1 | 25 | 2 |
| 66–0560 | Screw – Shoulder | 1 | 19 | 2 |
| 66–0570 | Guide – Belt | 3 | 11 | 1 |
| 66–0580 | Arm – Pivot | 2 | 30 | 2 |
| 66–0620 | Retainer – Belt | 1 | 16 | 1 |
| 66–5350 | Lever – Control | 7 | 5 | 1 |
| 66–6040 | Key – Rocking (R.H.) | 4 | * | 1 |
| 66–6050 | Key – Rocking (L.H.) | 4 | 27 | 1 |
| 70–9760 | Bushing – Sleeve | 4 | 19 | 2 |
| 71–0960 | Support – Cable | 7 | 8 | 1 |
| 71–7900 | Cap – Hinge Bolt L.H. | 1 | 10 | 1 |
| 71–7910 | Cap – Hinge Bolt R.H. | 1 | 6 | 1 |
| 71–8090 | Mount – Handle L.H. | 6 | 13 | 1 |
| 71–8100 | Mount – Handle R.H. | 6 | 14 | 1 |
| 71–8580 | Spacer – Door | 1 | 12 | 2 |
| 71–9470 | Door – Bag | 8 | 3 | 1 |
| 71–9480 | Handle – Door | 8 | 2 | 1 |
| 71–9640 | Ramp – Discharge | 1 | 27 | 1 |
| 71–9650 | Access – Cover | 1 | 14 | 1 |
| 71–9680 | Bag – Grass 53cm | 8 | 5 | 1 |
| 71–9800 | Door – Discharge | 1 | 9 | 1 |
| 71–9840 | Spring – Door | 1 | 11 | 2 |
| 71–9870 | Decal – Deck 53cm | 2 | 29 | 1 |
| 71–9871 | Decal – TORO | 6 | 19 | 1 |
| 71–9920 | Cover – Top | 1 | 15 | 1 |
| 71–9930 | Frame – Grass Bag | 8 | 4 | 1 |
| 74–1660 | Cover – Wheel | 4 | 30 | 2 |
| 74–1670 | Spacer – Wheel Cover | 4 | 34 | 2 |
| 76–0760 | Key – Shift | 4 | 41 | 2 |
| 76–0770 | Collar – Shift | 4 | 42 | 1 |
| 76–0780 | Sleeve – Shift Key | 4 | 40 | 1 |
| 76–0920 | Lever – Shift | 4 | 16 | 1 |
| 76–2930 | Retainer – Cable | 4 | 15 | 1 |
| 77–7040 | Cover – Air Cleaner | 12 | 968 | 1 |
| 77–7140 | Bracket – Blower Housing | 14 | 980 | 1 |
| 77–7170 | Bracket – Fuel Tank | 15 | 182 | 1 |
| 77–7180 | Grommet | 14 | 1002 | 1 |
| 77–7200 | Cover–Starter | 16 | 925 | 1 |
| 77–7210 | Insert – Rewind Handle | 13 | 59 | 1 |
| 77–7240 | Bowl – Fuel | 11 | 136 | 1 |
| 77–7250 | Limiter – Floater | 11 | 1039 | 1 |
| 77–7250 | Limiter – Floater | 17 | 1039 | 1 |
| 77–7260 | Dipstick – Oil | 10 | 523 | 1 |
| 77–7270 | Seal – O–Ring | 10 | 524 | 1 |
| 77–7270 | Seal – O–Ring | 17 | 524 | 1 |
| 77–7280 | Tube – Oil Filler | 10 | 525 | 1 |
| 77–7300 | Seal – O–Ring | 10 | 842 | 1 |
| 77–7300 | Seal – O–Ring | 17 | 842 | 1 |
| 77–7320 | Gasket – Rocker Cover | 9 | 1022 | 1 |
| 77–7320 | Gasket – Rocker Cover | 17 | 1022 | 1 |
| 77–7330 | Plug – Spark | 9 | 337 | 1 |
| 77–7340 | Elbow – Spark Plug | 9 | 635 | 1 |
| 77–7360 | Screw – Hex Head | 9 | 10 | 1 |
| 77–7370 | Lever Ass'y – Governor | 10 | 227 | 1 |
| 77–7380 | Bolt – Governor Lever | 10 | 562 | 1 |
| 77–7390 | Nut – Hex | 10 | 592 | 1 |

*Not Illustrated

# TORO PART NUMBER INDEX (Cont.)



| Part No. | Description | Pg. No. | Ref. No. | Qty. |
|---|---|---|---|---|
| 77–7400 | Cover – Breather | 9 | 572 | 1 |
| 77–7410 | Gasket – Breather | 17 | 9A | 1 |
| 77–7410 | Gasket – Breather | 9 | 9A | 1 |
| 77–7420 | Screw – Armature Mtg. | 14 | 334 | 1 |
| 77–7420 | Screw – Breather | 9 | 307 | 1 |
| 77–7460 | Crank – Governor | 10 | 616 | 1 |
| 77–7470 | Washer | 10 | 230 | 1 |
| 77–7480 | Pushnut | 10 | 615 | 1 |
| 77–7490 | Gear – Cam | 10 | 46 | 1 |
| 77–7500 | Gear – Governor | 10 | 219 | 1 |
| 77–7530 | Gear – Timing | 10 | 741 | 1 |
| 77–7550 | Gasket – Engine Base | 10 | 12 | 1 |
| 77–7550 | Gasket – Engine Base | 17 | 12 | 1 |
| 77–7560 | Base – Engine | 10 | 18 | 1 |
| 77–7570 | Seal – Oil | 10 | 20 | 1 |
| 77–7570 | Seal – Oil | 17 | 20 | 1 |
| 77–7580 | Tank Ass'y – Fuel | 15 | 180 | 1 |
| 77–7590 | Cylinder Ass'y | 9 | 1 | 1 |
| 77–7600 | Pin – Cylinder | 9 | 718 | 1 |
| 77–7610 | Tappet – Valve | 9 | 45 | 1 |
| 77–7620 | Rod – Push | 9 | 1026 | 1 |
| 77–7630 | Screw – Cylinder Head | 9 | 13 | 1 |
| 77–7640 | Pump – Oil | 10 | 1024 | 1 |
| 77–7650 | Cover – Oil Pump | 10 | 979 | 1 |
| 77–7660 | O-Ring | 10 | 116A | 1 |
| 77–7660 | Gasket – Sealing | 17 | 116 | 1 |
| 77–7670 | Rod – Connecting | 10 | 29 | 1 |
| 77–7690 | Piston Ass'y (Std.) | 10 | 25 | 1 |
| 77–7700 | Ring Set (Std.) | 10 | 26 | 1 |
| 77–7710 | Lock – Piston Pin | 10 | 27 | 1 |
| 77–7730 | Head – Cylinder | 9 | 5 | 1 |
| 77–7740 | Gasket – Cylinder Head | 17 | 7 | 1 |
| 77–7740 | Gasket – Cylinder Head | 9 | 7 | 1 |
| 77–7760 | Gasket – Exhaust | 9 | 883 | 1 |
| 77–7760 | Gasket – Exhaust | 15 | 883 | 1 |
| 77–7760 | Gasket – Exhaust | 17 | 883 | 1 |
| 77–7770 | Guide – Push Rod | 9 | 1034 | 1 |
| 77–7780 | Stud – Rocker Arm | 9 | 166 | 1 |
| 77–7790 | Arm – Rocker | 9 | 1029 | 1 |
| 77–7800 | Cap – Valve | 9 | 238 | 1 |
| 77–7810 | Spring – Valve | 9 | 35 | 1 |
| 77–7820 | Adapter Ass'y | 11 | 122 | 1 |
| 77–7820 | Adapter Assembly | 17 | 122 | 1 |
| 77–7820 | Adapter Ass'y | 9 | 122 | 1 |
| 77–7860 | Valve – Exhaust | 9 | 33 | 1 |
| 77–7870 | Retainer – Spring | 9 | 40 | 1 |
| 77–7880 | Valve – Intake | 9 | 34 | 1 |
| 77–7890 | Seal Ass'y – Valve | 9 | 868 | 1 |
| 77–7890 | Seal Ass'y – Valve | 17 | 868 | 1 |
| 77–7900 | Gasket – Valve | 9 | 868 | 1 |
| 77–7900 | Seal – Valve | 17 | 868 | 1 |
| 77–7910 | Ball & Screw – | 9 | 192 | 1 |
| 77–7920 | Screw – Air Cleaner | 12 | 969 | 1 |
| 77–7930 | Screw – Air Cleaner | 12 | 971 | 1 |
| 77–7940 | Base – Air Cleaner | 12 | 966 | 1 |
| 77–7950 | Element – Filter | 12 | 535 | 1 |
| 77–7960 | Gasket – Air Cleaner | 12 | 163 | 1 |
| 77–7960 | Gasket – Air Cleaner | 17 | 163 | 1 |
| 77–7970 | Screw – Hex Head | 11 | 124 | 1 |
| 77–7980 | Link – Governor | 12 | 201 | 1 |
| 77–7990 | Spring – Governor | 12 | 209 | 1 |
| 77–8000 | Bracket – Carburetor | 12 | 620 | 1 |
| 77–8010 | Switch – Stop | 12 | 621 | 1 |
| 77–8010 | Switch – Stop | 14 | 621 | 1 |
| 77–8020 | Screw Ass'y – | 12 | 98A | 1 |
| 77–8040 | Tube – Vent | 11 | 1011 | 1 |
| 77–8050 | Carburetor Ass'y | 11 | 125 | 1 |
| 77–8070 | Valve – Choke | 11 | 108 | 1 |
| 77–8080 | Valve – Throttle | 11 | 130 | 1 |
| 77–8090 | Screw – Valve Mtg. | 11 | 95 | 1 |
| 77–8110 | Valve – Inlet | 11 | 134 | 1 |
| 77–8110 | Valve – Inlet | 17 | 134 | 1 |
| 77–8120 | Adapter – Jet | 11 | 147 | 1 |
| 77–8130 | Shaft – Choke | 11 | 141 | 1 |
| 77–8140 | Spring – Choke | 12 | 618 | 1 |
| 77–8150 | Washer – Seal | 11 | 634 | 1 |
| 77–8150 | Washer – Seal | 17 | 634 | 1 |
| 77–8160 | Shaft – Throttle | 11 | 131 | 1 |
| 77–8170 | Float – Carburetor | 11 | 133 | 1 |
| 77–8180 | Pin – Float Hinge | 11 | 104 | 1 |
| 77–8180 | Pin – Float Hinge | 17 | 104 | 1 |
| 77–8190 | Bowl Ass'y – Carburetor | 11 | 975 | 1 |
| 77–8200 | Gasket – Float Bowl | 11 | 137 | 1 |
| 77–8200 | Gasket – Float Bowl | 17 | 137 | 1 |
| 77–8210 | Sealing – Gasket | 11 | 116 | 1 |
| 77–8210 | O–Ring | 17 | 116 | 1 |
| 77–8220 | Screw – Hex Head | 11 | 955 | 1 |
| 77–8230 | Valve and Spring | 17 | 118 | 1 |
| 77–8230 | Valve & Spring – Needle | 11 | 118 | 1 |
| 77–8240 | Screw – Idle Adj. | 11 | 98 | 1 |
| 77–8300 | Screw – Hex Head | 13 | 65 | 1 |
| 77–8310 | Screw – Hex Head | 10 | 305 | 1 |
| 77–8310 | Screw – Hex Head | 14 | 305 | 1 |
| 77–8320 | Flywheel | 14 | 23 | 1 |
| 77–8340 | Key – Flywheel | 14 | 24 | 1 |
| 77–8350 | Cup – Starter | 14 | 455 | 1 |
| 77–8360 | Nut – Flywheel | 14 | 332 | 1 |
| 77–8370 | Alternator | 14 | 474 | 1 |
| 77–8390 | Stud | 14 | 305A | 1 |
| 77–8400 | Wire – Ground | 14 | 356 | 1 |
| 77–8420 | Armature – Magneto | 14 | 333 | 1 |
| 77–8470 | Retainer – Rewind | 13 | 456 | 1 |
| 77–8480 | Rope – Starter | 13 | 58 | 1 |
| 77–8490 | Screw – Rewind Starter | 13 | 461 | 1 |
| 77–8500 | Spring – Torsion | 13 | 515 | 1 |
| 77–8520 | Handle – Rewind Starter | 13 | 60 | 1 |
| 77–8530 | Pawl – Starter | 13 | 459 | 1 |
| 77–8550 | Pin – Spring | 13 | 718A | 1 |
| 77–8570 | Cover – Spring | 13 | 1016 | 1 |
| 77–8590 | Seal – Foam | 15 | 1041 | 1 |
| 77–8590 | Seal – Foam | 17 | 1041 | 1 |
| 77–8600 | Screw – Tank Mtg. | 15 | 674 | 1 |
| 77–8620 | Hose – Fuel | 15 | 187 | 1 |
| 77–8630 | Clamp – Fuel Hose | 15 | 601 | 1 |
| 77–8640 | Muffler – Exhaust | 15 | 300 | 1 |
| 77–8660 | Guard – Muffler | 15 | 832 | 1 |
| 77–8670 | Motor–Starter | 16 | 309 | 1 |
| 77–8680 | Bracket Assembly | 16 | 801 | 1 |
| 77–8690 | Head Assembly | 16 | 802 | 1 |
| 77–8700 | Shell and Magnet Ass'y | 16 | 803 | 1 |
| 77–8710 | Screw–Hex Head | 16 | 310 | 1 |
| 77–8720 | Screw–Hex Head | 16 | 22A | 1 |
| 77–8730 | Armature Assembly | 16 | 544 | 1 |
| 77–8740 | Washer Set | 16 | 548 | 1 |
| 77–8770 | Clutch Assembly | 16 | 513 | 1 |
| 77–8780 | Cover–Gear | 16 | 784 | 1 |
| 77–8790 | Gasket–Cover | 16 | 785 | 1 |
| 77–8800 | Screw–Hex Head | 16 | 74 | 1 |

*Not Illustrated

# TORO PART NUMBER INDEX (Cont.)

| Part No. | Description | Pg. No. | Ref. No. | Qty. |
|---|---|---|---|---|
| 77–8810 | Pinion–Starter | 16 | 782 | 1 |
| 77–8820 | Spline–Starter | 16 | 937 | 1 |
| 77–8830 | Retainer–Lock | 16 | 938 | 1 |
| 77–8840 | Starter Ass'y – Rewind | 13 | 608 | 1 |
| 77–8860 | Spring –Brake | 14 | 922 | 1 |
| 77–8870 | Screw – Hex Head | 14 | 258 | 1 |
| 77–8890 | Housing – Rewind | 13 | 55 | 1 |
| 77–8900 | Gasket Set | 17 | 358 | 1 |
| 77–8910 | Drive Kit | 16 | 510 | 1 |
| 77–8920 | Carburetor Kit | 17 | 121 | 1 |
| 77–8930 | Carburetor Gasket Set | 17 | 977 | 1 |
| 77–8953 | Engine | 3 | 1 | 1 |
| 77–9020 | Short Block | 9 | | 1 |
| 77–9030 | Spacer – Fuel Tank | 15 | 670 | 1 |
| 77–9040 | Arrester – Spark | 15 | 994 | 1 |
| 77–9050 | Screw – Arrester Mtg. | 15 | 346A | 1 |
| 77–9060 | Seal – Oil | 9 | 3 | 1 |
| 77–9060 | Seal – Oil | 17 | 3 | 1 |
| 77–9070 | Screw – Engine Base | 10 | 22 | 1 |
| 77–9200 | Screw – Hex Head | 9 | 10A | 1 |
| 77–9240 | Plug – Pipe | 10 | 15 | 1 |
| 77–9250 | Gasket – Breather | 9 | 9 | 1 |
| 77–9250 | Gasket – Breather | 17 | 9 | 1 |
| 77–9270 | Pulley – Rewind Starter | 13 | 56 | 1 |
| 77–9300 | Breather Ass'y | 9 | 8 | 1 |
| 77–9310 | Screw – Set | 9 | 192A | 1 |
| 77–9320 | Cover – Valve | 9 | 1023 | 1 |
| 77–9330 | Crankshaft | 10 | 16 | 1 |
| 77–9340 | Pin Ass'y – Piston | 10 | 28 | 1 |
| 77–9350 | Screw – Conn. Rod | 10 | 32 | 1 |
| 77–9360 | Screw – Hex Head | 10 | 188 | 1 |
| 77–9360 | Screw – Hex Head | 14 | 188 | 1 |
| 77–9360 | Screw – Hex Head | 15 | 188 | 1 |
| 77–9360 | Screw – Hex. Head | 12 | 188 | 1 |
| 77–9410 | Tube – Breather | 9 | 11 | 1 |
| 77–9430 | Screw – Hex | 15 | 346 | 1 |
| 77–9450 | Terminal – Spark Plug | 14 | 851 | 1 |
| 77–9460 | Brake Ass'y | 14 | 923 | 1 |
| 77–9470 | Tube – Breather | 12 | 529 | 1 |
| 77–9480 | Housing – Blower | 14 | 304 | 1 |
| 77–9520 | Screw – Hex Head | 14 | 423 | 1 |
| 77–9530 | Switch – Starter | 14 | 935 | 1 |
| 77–9540 | Gear – Pinion | 16 | 783 | 1 |
| 77–9550 | Cover – Brake | 3 | 18 | 1 |
| 80–4792 | Harness – Wire | 6 | 10 | 1 |
| 86–7990 | Screw – Clamp | 3 | 16 | 1 |
| 92–2289 | Plate – TORO Logo | 3 | 2 | 1 |
| 92–9665 | Screw – Self Tapping | 6 | 17 | 5 |
| 93–3772 | Guide – Rope | 7 | 13 | 1 |
| 93–4105 | Decal – Danger | 1 | 13 | 1 |
| 93–4355 | Decal – Recoil | 3 | 3 | 1 |
| 93–6628 | Cable – Brake | 7 | 15 | 1 |
| 93–6631 | Control – Throttle | 6 | 6 | 1 |
| 93–6632 | Control – Ground Speed | 6 | 1 | 1 |
| 93–6634 | Cable – Traction | 7 | 10 | 1 |
| 93–6637 | Handle | 6 | 7 | 1 |
| 93–6660 | Decal – Instruction | 6 | 8 | 1 |
| 93–6668 | Decal – Battery | 6 | 20 | 1 |
| 93–7198 | Gas Cap Assembly | 3 | 4 | 1 |
| 218–461 | Nut – Lock | 6 | 4 | 1 |
| 2210–249 | Clamp – Throttle | 3 | 15 | 1 |
| 2210–316 | Stop – Rope | 3 | 17 | 1 |
| 237–153 | Seal – ORing | 4 | 18 | 2 |
| 302–56 | Fitting – Grease | 4 | 20 | 2 |
| 321–3 | Screw – Cap Hex. Hd. | 7 | 6 | 1 |
| 321–52 | Screw – Handle | 7 | 14 | 1 |
| 322–29 | Screw – Hex Hd. Cap | 1 | 8 | 2 |
| 3253–22 | Washer – Blade | 3 | 9 | 1 |
| 3254–5 | Washer – Lock | 6 | 5 | 1 |
| 3256–22 | Washer – Flat | 7 | 11 | 1 |
| 3256–24 | Washer – Flat | 4 | 12 | 1 |
| 3256–24 | Washer – Flat | 1 | 17 | 1 |
| 3272–5 | Pin – Cotter | 4 | 14 | 1 |
| 3290–378 | Tie – Cable | 6 | 11 | 5 |
| 3296–5 | Nut – Lock | 4 | 11 | 1 |
| 3296–6 | Nut – Lock | 1 | 24 | 4 |
| 3296–6 | Nut – Lock | 4 | 35 | 2 |
| 3296–42 | Nut – Lock | 7 | 4 | 3 |
| 3296–58 | Nut – Lock | 7 | 12 | 2 |
| 32121–120 | Pin – Coil | 5 | 54 | 1 |
| 32144–15 | Screw – Hex Flange Hd. | 1 | 18 | 1 |
| 32144–70 | Screw – Cap Hex. Hd. | 1 | 3 | 6 |
| 32144–70 | Screw – Hex Hd. Cap | 3 | 6 | 7 |
| 32144–70 | Screw – Hex. Washer Hd. | 4 | 1 | 5 |
| 32144–102 | Screw – Thread Forming | 3 | 14 | 3 |
| 32144–111 | Screw – Index Hex Washer | 8 | 1 | 5 |

*Not Illustrated