FORM NO. 3317–390

TORO

MODEL NO. 20928BC–5900001 & UP

PARTS CATALOG

48cm REAR BAGGING MOWER

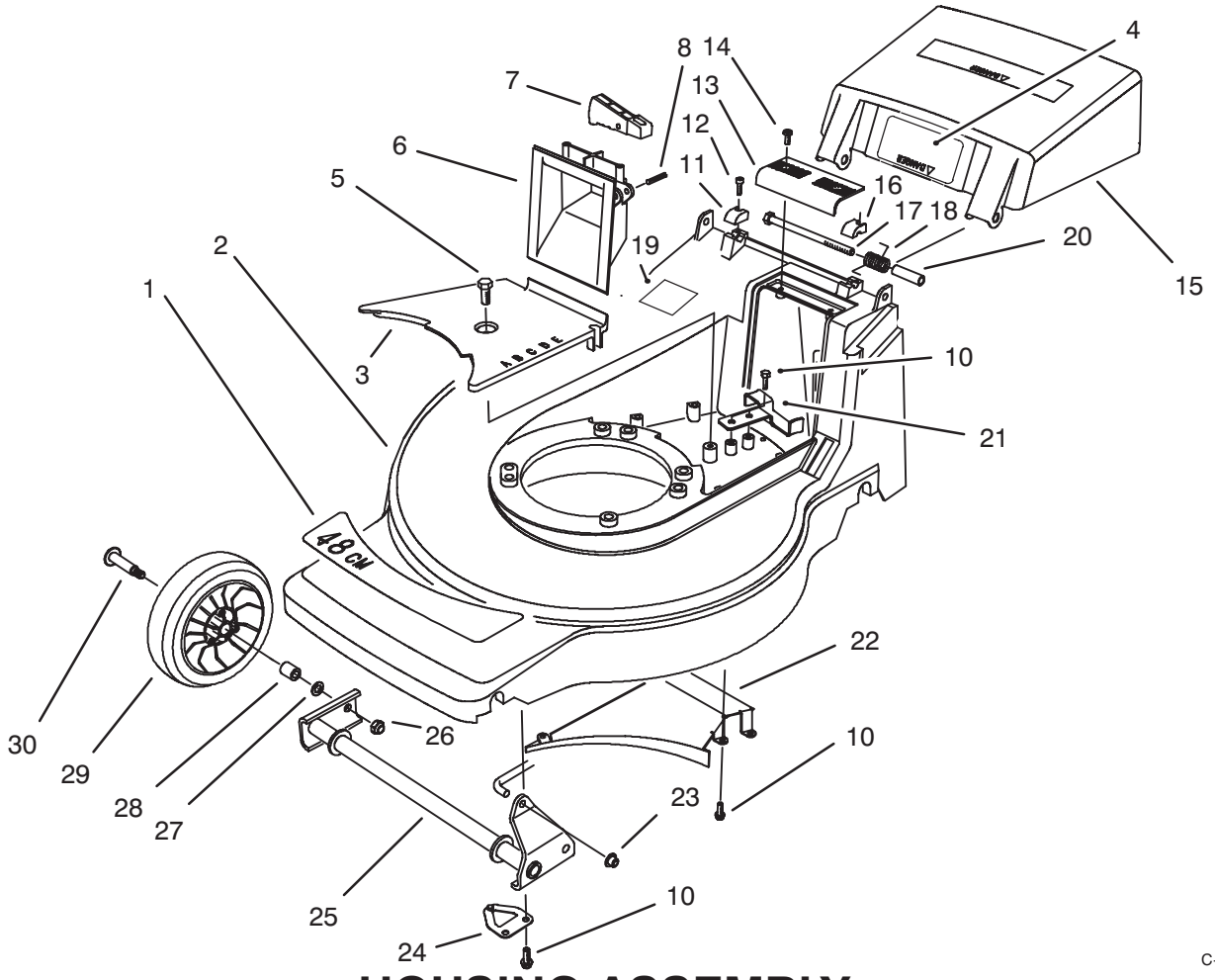

C–2209

HOUSING ASSEMBLY

Ref. No.	Part No.	Description	No. Used
1	71–9860	Decal – 48cm	1
2	16–5979	Housing – 48cm	1
3	71–7920	Cover – Belt	1
4	93–4105	Decal – Danger	1
5	32144–70	Screw – Hex. Flange Hd.	1
6	71–7870	Grip – Lower	1
7	71–7930	Trigger – H.O.C.	1
8	3284–5	Pin – Roll	1
10	32144–4	Screw – Thread Forming	10
11	71–7910	Cap – Hinge Bolt R.H.	1
12	65–5210	Screw – Thread Forming	2
13	71–7860	Grip – Upper	1
14	32144–97	Screw – Thread Forming	2
15	71–9800	Door – Discharge	1
16	71–7900	Cap – Hinge Bolt L.H.	1

Ref. No.	Part No.	Description	No. Used
17	322–29	Screw – Cap Hex. Hd.	2
18	71–9840	Spring – Door	2
19	66–1700	Decal – Noise Rating	1
20	71–8580	Spacer – Door	2
21	71–7890	Guide – Belt Rear	1
22	71–7990	Ramp – Discharge	1
23	32112–11	Nut – Push	1
24	71–8830	Retainer – Shaft	2
25	71–7820	Pivot – Front	1
26	3296–5	Nut – Lock	2
27	40–1940	Washer – Wheel	2
28	27–6250	Bushing – Wheel	4
29	46–1113	Wheel & Tire Assembly (Incl. Ref. #28)	2
30	27–6230	Bolt – Wheel	2

© The TORO Company – 1994
All Rights Reserved

TPS

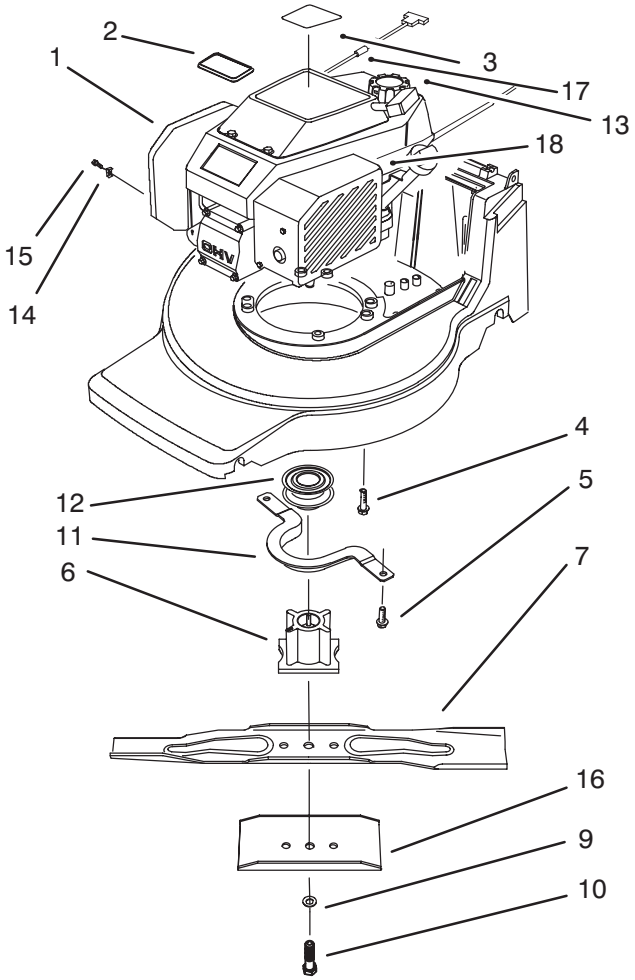

ENGINE ASSEMBLY

Ref. No.	Part No.	Description	No. Used
1	77–8953	Engine – Complete	1
2	92–2289	Plate – Toro Logo	1
3	93–4355	Decal – Recoil	1
4	32144–102	Screw – Thread Forming	3
5	32144–4	Screw – Thread Forming	2
6	71–7940	Retainer – Blade	1
7	92–9813	Blade – 48cm	1
9	3253–22	Washer – Lock	1
10	26–0672	Bolt – Blade	1

Ref. No.	Part No.	Description	No. Used
11	71–7960	Guide – Engine Belt	1
12	62–7550	Pulley – Driver	1
13	93–7198	Cap – Gas	1
14	2210–249	Clamp – Casing	1
15	86–7990	Screw – Clamp	1
16	92–9812	Stiffener – Blade	1
17	2210–316	Stop – Rope	1
18	77–9550	Cover – Brake	1

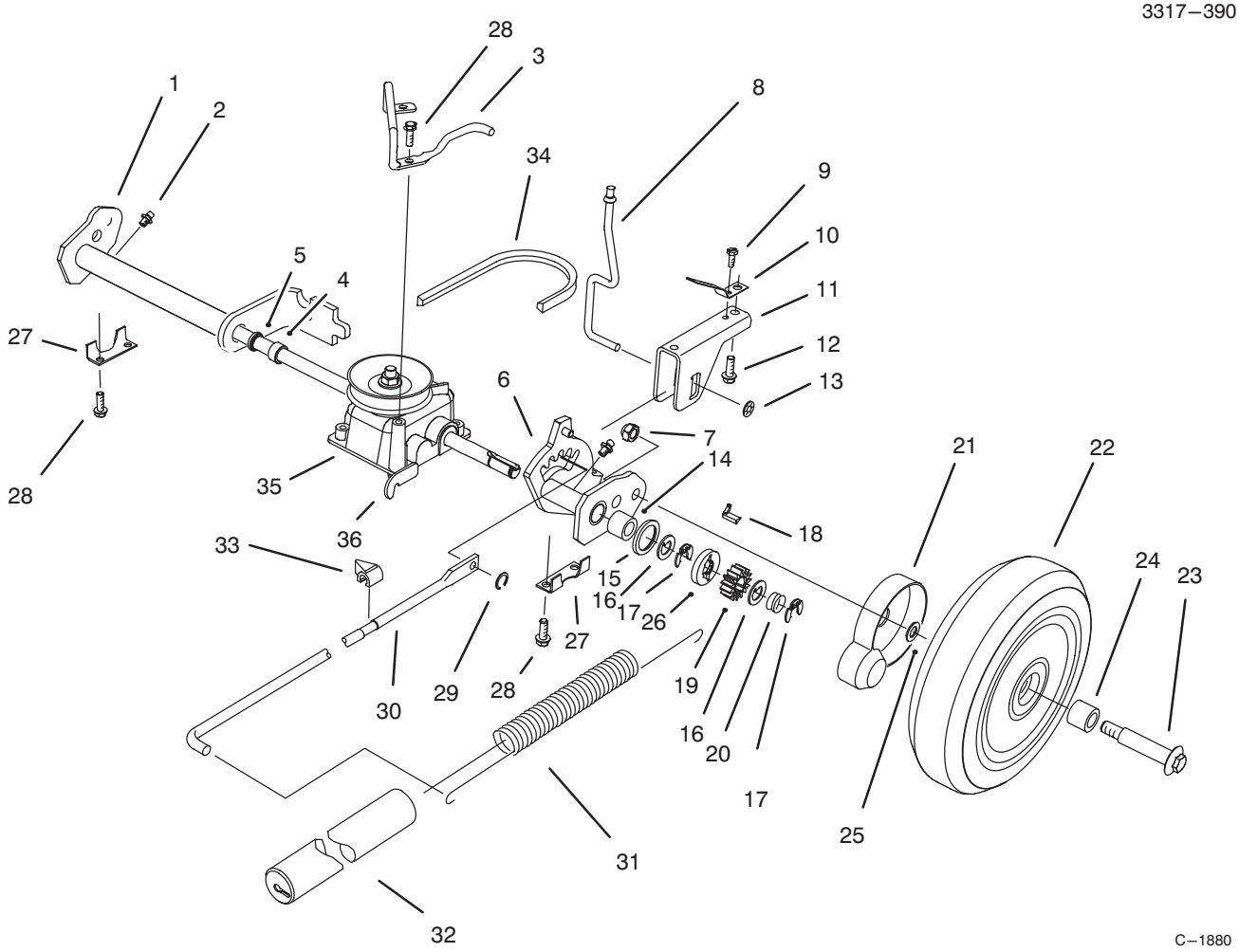

S. P. REAR AXLE ASSEMBLY

Ref. No.	Part No.	Description	No. Used
1	92–9680	Rear Pivot Assembly R.H. (Incl. Ref. #2, 4, 5 & 14)	1
2	302–26	Fitting – Grease	2
3	71–9850	Retainer Belt	1
4	47–2890	Bushing – Sleeve	2
5	47–6730	Seal – Grease	2
6	92–9677	Rear Pivot Assembly L.H. (Incl. Ref. #2, 4, 5 & 14)	1
7	3296–5	Nut – Lock	2
8	71–7840	Rod – Trigger	1
9	32144–31	Screw – Thread Forming	1
10	71–8060	Spring – Trigger Return	2
11	71–8080	Saddle – H.O.C.	1
12	63–8590	Screw – Thread Forming	2
13	32112–13	Nut – Push	1
14	48–2060	Bearing – Needle	2
15	65–4710	Washer – Friction	2
16	65–4740	Washer – Keyed Thrust	4
17	65–2720	Ring – Retaining	4
18	66–6050	Key – Rocking L.H.	1
*	66–6040	Key – Rocking R.H.	1

Ref. No.	Part No.	Description	No. Used
19	65–4750	Gear – Pinion	2
20	65–4720	Spring – Compression	2
21	74–1660	Cover – Wheel	2
22	14–9959	Wheel, Tire & Gear Assy. (Incl. Ref. #24)	2
23	27–6230	Bolt – Wheel	2
24	27–6250	Bushing – Wheel	4
25	74–1670	Spacer – Wheel	2
26	65–4760	Washer – Clutch	2
27	71–7770	Plate – Rear Securing	2
28	32144–4	Screw – Thread Forming	6
29	32151–93	Ring – Grip	1
30	71–7970	Rod – Link	1
31	71–7740	Spring – Counterbalance	1
32	71–8450	Cover – Spring	1
33	71–7980	Indicator – H.O.C.	1
34	71–9450	V–Belt	1
35	71–9600	Gearcase Assembly (Incl. Ref. #36)	1
36	71–9630	Bracket – Traction	1

*Not Illustrated

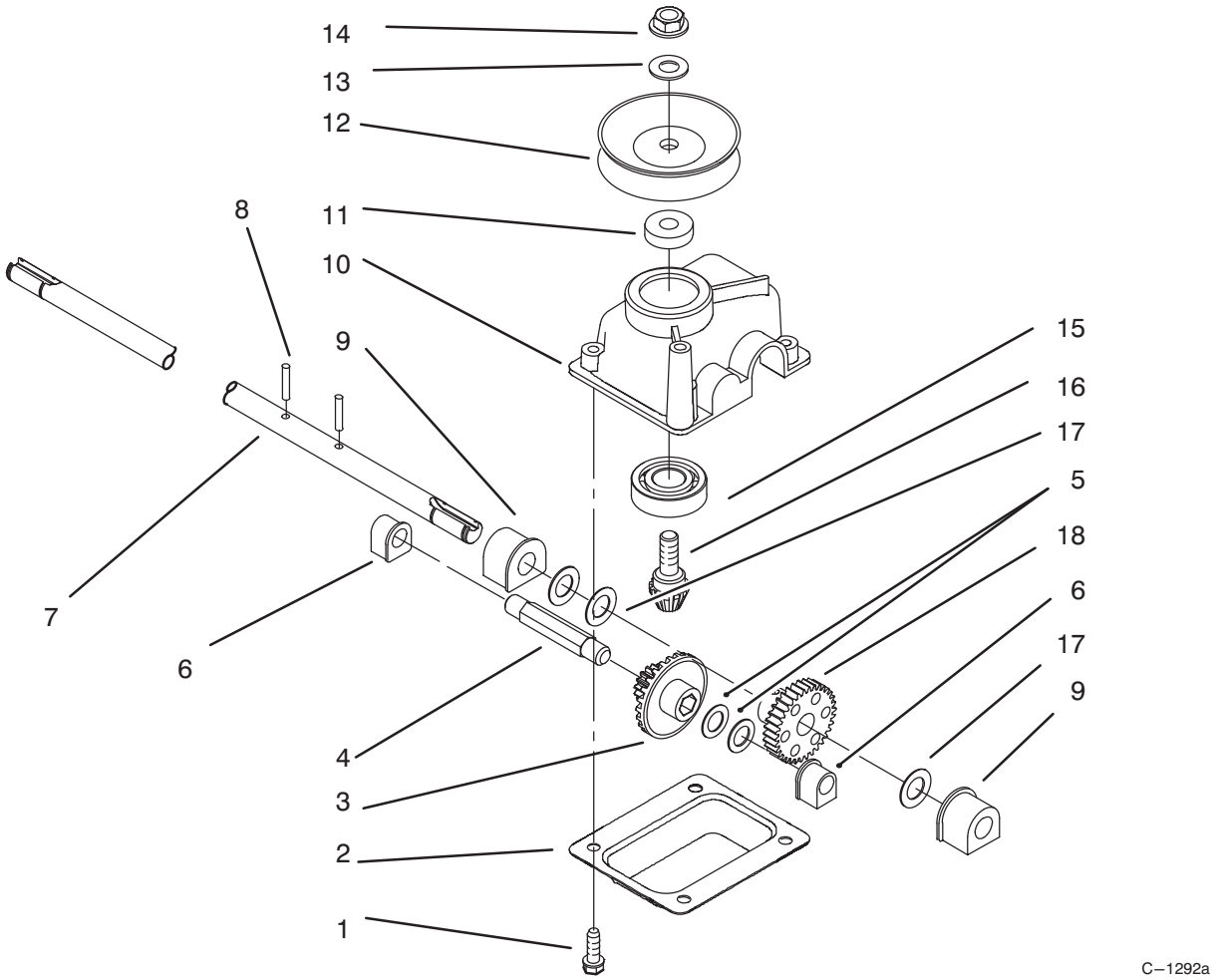

GEARCASE ASSEMBLY NO. 71–9600

Ref. No.	Part No.	Description	No. Used
1	49–2040	Screw – Taptite	4
2	614668	Cover – Gear Case	1
3	55–3760	Pinion – 15 Tooth	1
4	614696	Shaft – Intermediate	1
5	36–4791	Washer	2
6	60–8750	Bushing	2
7	71–9620	Shaft – Output	1
8	32121–63	Pin – Spirol	2
9	60–8850	Bushing – Output	2
10	614578	Gearcase	1

Ref. No.	Part No.	Description	No. Used
11	62–6660	Spacer	1
12	71–9610	Pulley – Half	2
13	3256–24	Washer	1
14	3296–5	Nut	1
15	38–7820	Bearing – Ball	1
16	60–8890	Gear – Bevel Pinion	1
17	36–4780	Washer – Thrust	3
18	614596	Gear 34 Tooth	1
*	71–9600	Gear Case Ass'y Complete	1

*Not Illustrated

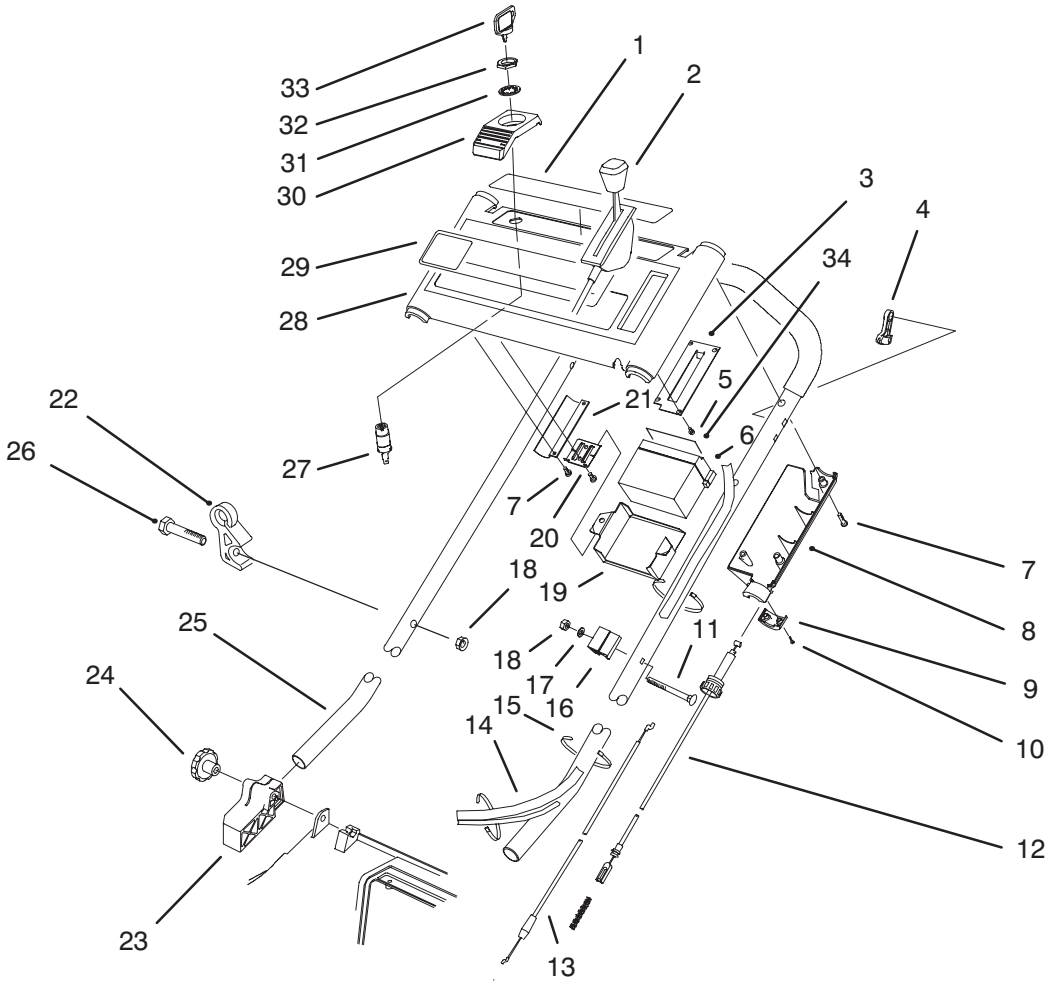

C–2210

HANDLE ASSEMBLY

Ref. No.	Part No.	Description	No. Used
1	93–6651	Decal – Instruction	1
2	93–1115	Control – Throttle	1
3	71–8040	Plate – Throttle	1
4	46–5520	Lever – Traction	1
5	32144–98	Screw – Phillips Pan Hd.	4
6	55–7520	Battery Assembly	1
7	32144–97	Screw – Phillips Pan Hd.	9
8	93–0339	Cover – Throttle Lower	1
9	71–7630	Cap – Throttle Lower	1
10	32144–99	Screw – Phillips Pan Hd.	2
11	46–6432	Screw – Handle	1
12	93–1119	Cable – Traction	1
13	93–1116	Cable – Brake	1
14	80–4791	Harness – Wire	1
15	3290–378	Tie – Cable	3
16	46–6980	Support – Cable	1
17	3256–22	Washer – Flat	1
18	3296–42	Nut – Lock	2
19	55–8180	Retainer – Battery	1

Ref. No.	Part No.	Description	No. Used
20	71–8280	Bracket – Battery	2
21	71–8130	Bracket – Control	1
22	93–3772	Guide – Rope	1
23	71–8100	Mount – Handle R.H.	1
*	71–8090	Mount – Handle L.H.	1
24	19–4050	Knob	2
25	71–9023	Handle Assembly	1
26	321–52	Screw – Hex Hd. Cap	1
27	46–5780	Switch – Starter (Incl. Ref. #31 & 32)	1
28	16–8299	Panel – Control (Incl. Ref. #1 & 29)	1
29	71–9864	Decal – Panel Key	1
30	71–8200	Bracket – Switch Ignition	1
31	3254–5	Washer – Lock	1
32	218–461	Nut – Hex	1
33	63–8360	Key – Ignition	1
34	93–6668	Decal – Battery	1

*Not Illustrated

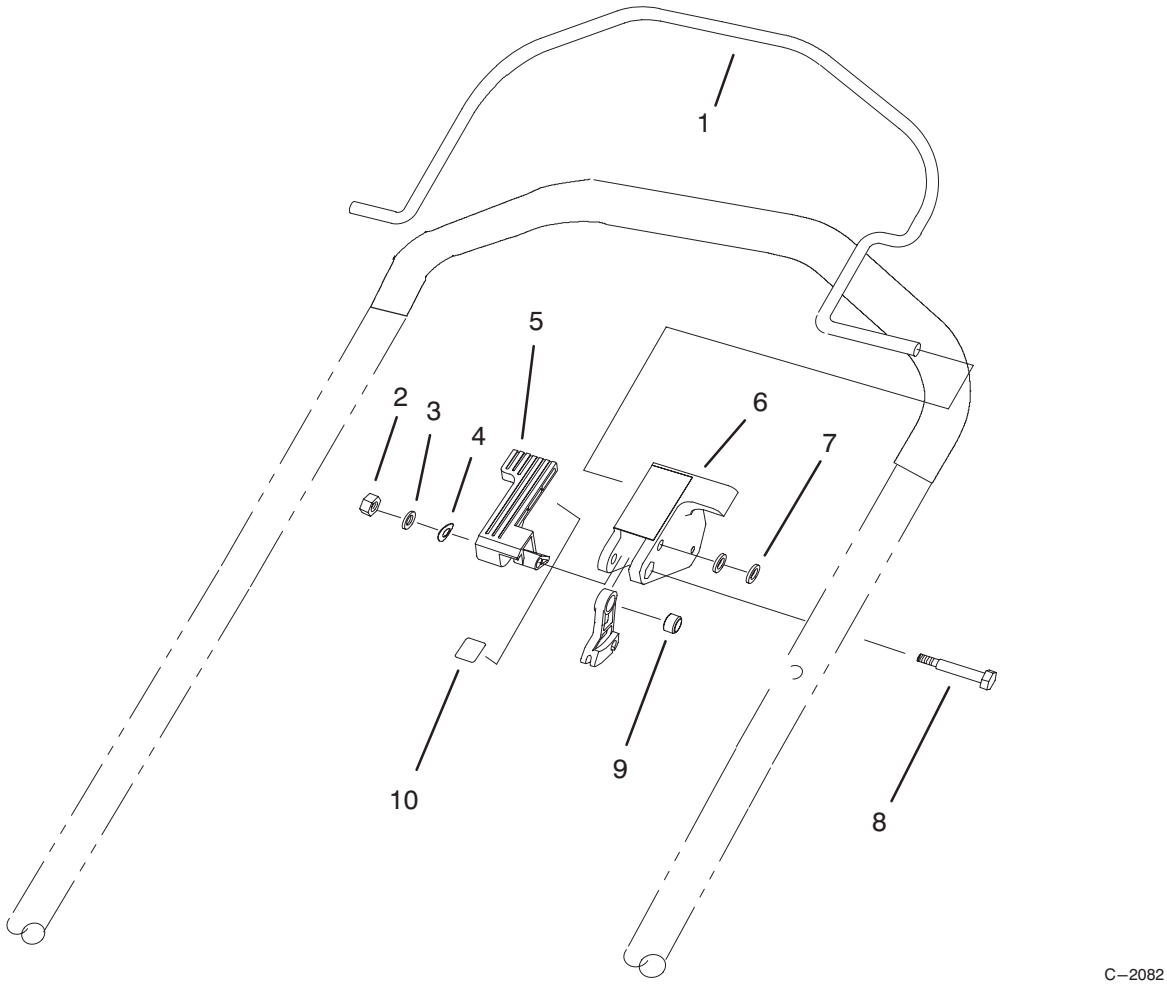

C–2082

CONTROL ASSEMBLY

Ref. No.	Part No.	Description	No. Used
1	93–0335	Bail – Control SP	1
2	3296–2	Nut – Lock	1
3	3256–49	Washer – Flat	1
4	92–2298	Washer – Spring	1
5	92–2299	Lever – Shift	1

Ref. No.	Part No.	Description	No. Used
6	93–0340	Stop – Pivot	1
7	3256–70	Washer – Flat	2
8	92–3132	Bolt – Shoulder	1
9	92–3133	Spacer – Traction Lever	1
10	93–6653	Decal – Traction	1

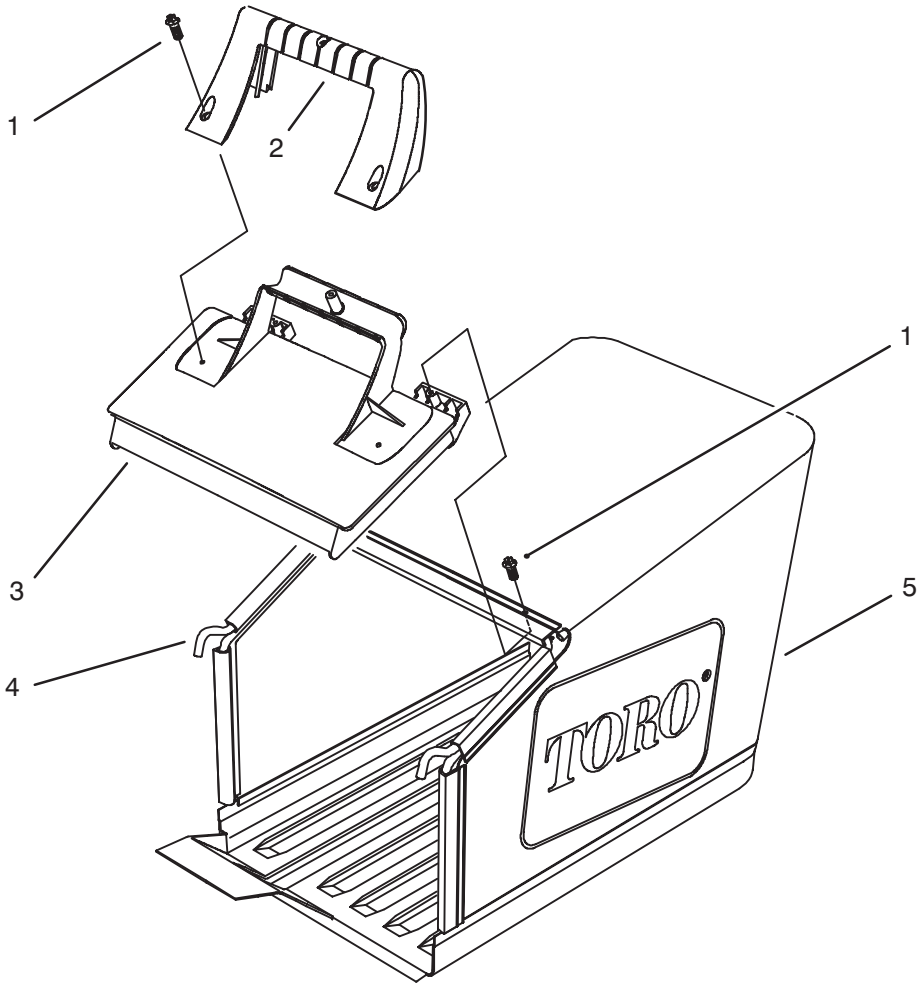

C–1509

GRASS BAG ASSEMBLY

Ref. No.	Part No.	Description	No. Used
1	32144–111	Screw – Hex Washer Hd Thr'd Form	5
2	71–9480	Handle – Door	1
3	71–9470	Door – Bag	1
4	71–9900	Frame – Bag	1
5	71–9460	Bag – Grass	1

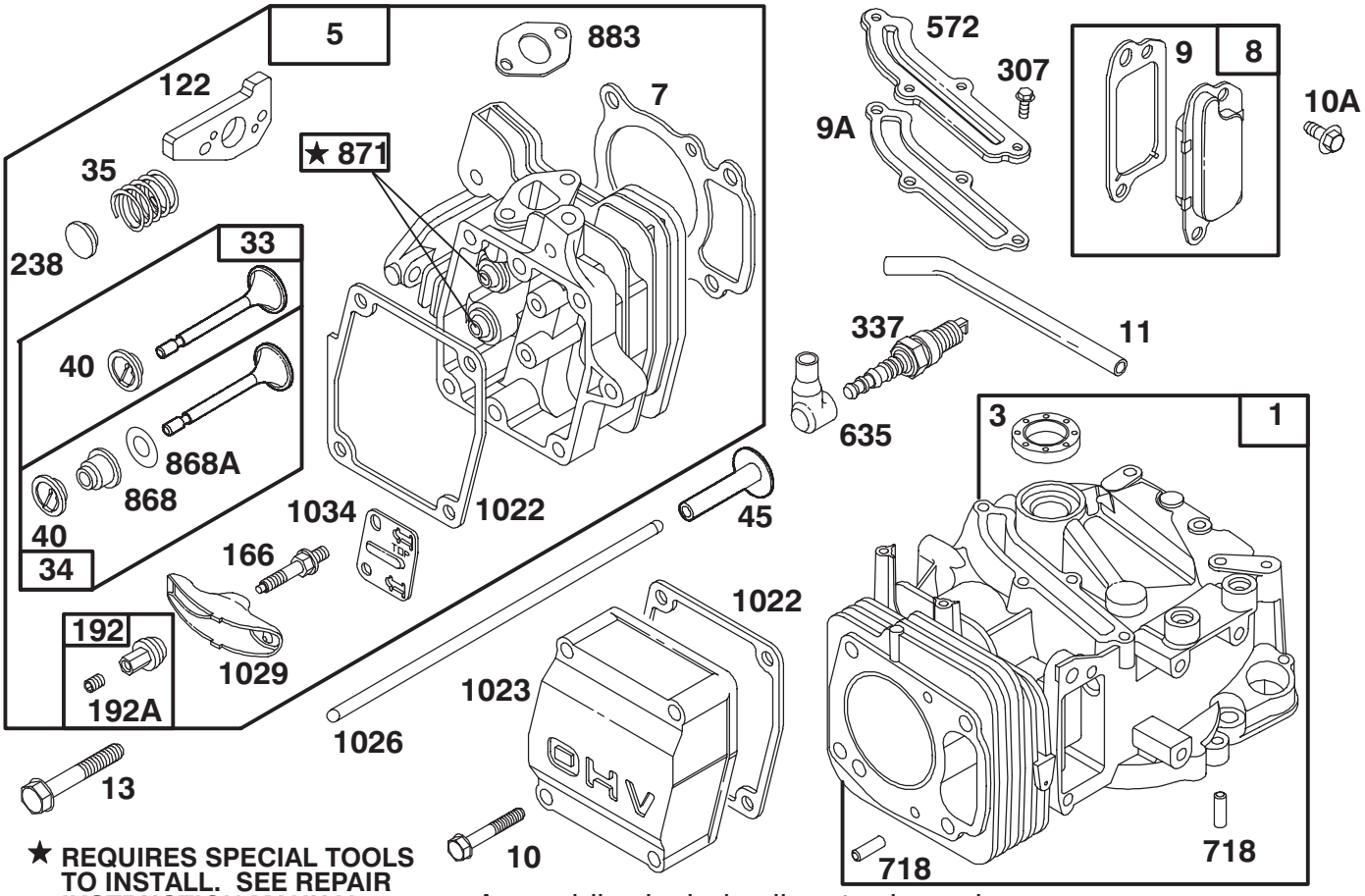

★ **REQUIRES SPECIAL TOOLS TO INSTALL. SEE REPAIR INSTRUCTION MANUAL.**

Assemblies include all parts shown in frames.

ENGINE GTS–150

Ref. No.	Part No.	Description	No. Used
1	77–7590	Cylinder Ass'y	1
★3	77–9060	Seal – Oil	1
5	77–7730	Head – Cylinder	1
★7	77–7740	Gasket – Cylinder Head	1
8	77–9300	Breather Ass'y	1
★9	77–9250	Gasket – Breather	1
★9A	77–7410	Gasket – Breather	1
10	77–7360	Screw – Hex Head (Valve Cover)	1
10A	77–9200	Screw – Hex Head	1
11	77–9410	Tube – Breather	1
13	77–7630	Screw – Cylinder Head	1
33	77–7860	Valve – Exhaust	1
34	77–7880	Valve – Intake	1
35	77–7810	Spring – Valve	1
40	77–7870	Retainer – Spring	1
45	77–7610	Tappet – Valve	1
●122	77–7820	Adapter Ass'y	1
166	77–7780	Stud – Rocker Arm	1

Ref. No.	Part No.	Description	No. Used
192	77–7910	Ball & Screw – Rocker Arm	1
192A	77–9310	Screw – Set	1
238	77–7800	Cap – Valve	1
307	77–7420	Screw – Breather Cover Mtg.	1
337	77–7330	Plug – Spark	1
572	77–7400	Cover – Breather	1
635	77–7340	Elbow – Spark Plug	1
718	77–7600	Pin – Cylinder	1
★868	77–7890	Seal Ass'y – Valve	1
★868A	77–7900	Gasket – Valve	1
871	77–7850	Bushing – Guide	1
★883	77–7760	Gasket – Exhaust	1
★1022	77–7320	Gasket – Rocker Cover	1
1023	77–9320	Cover – Valve	1
1026	77–7620	Rod – Push	1
1029	77–7790	Arm – Rocker	1
1034	77–7770	Guide – Push Rod	1

★ Included in Gasket Set–Part No. 77–8900
● Included in Carburetor Overhaul Kit–Part No. 77–8920

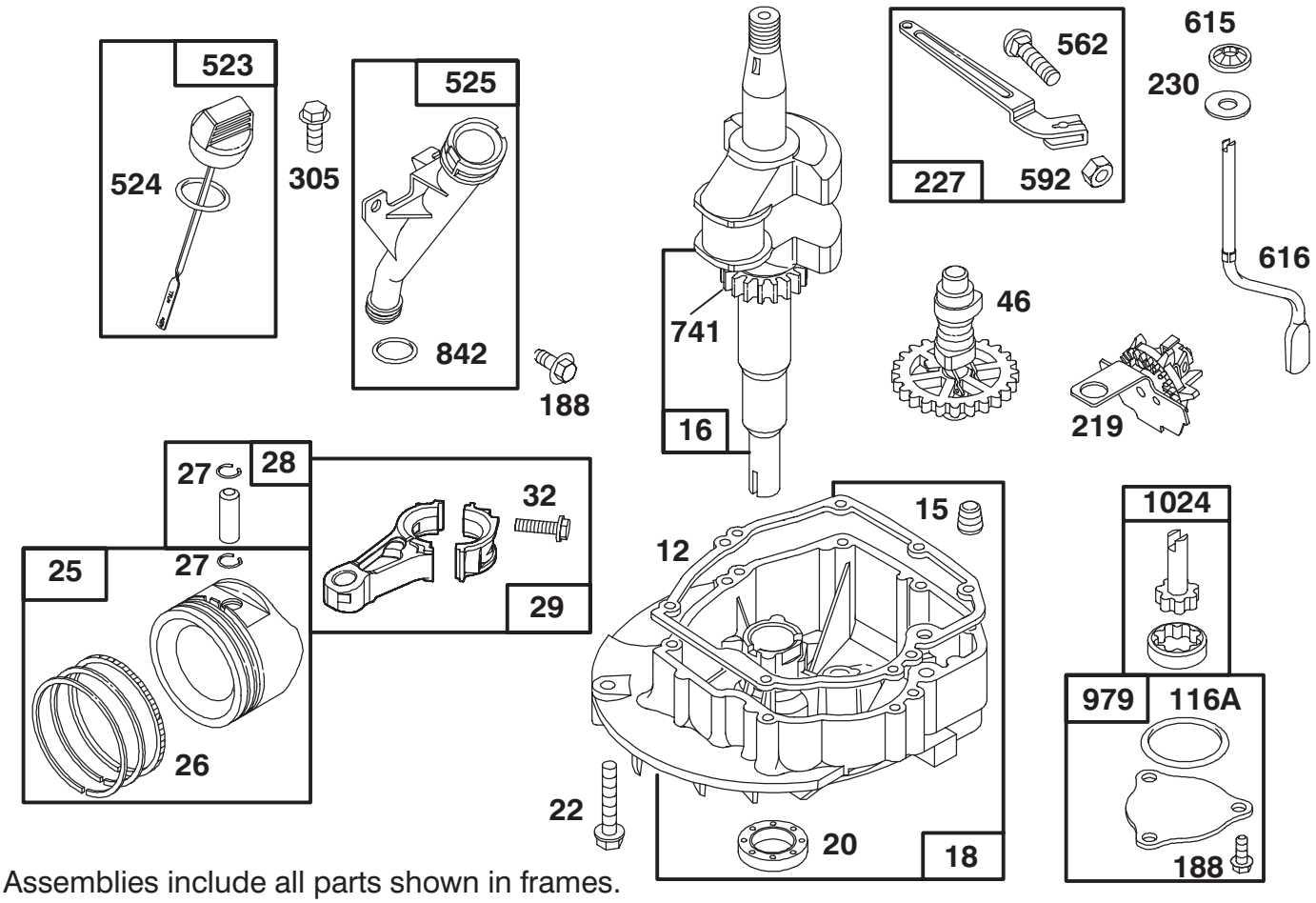

Assemblies include all parts shown in frames.

ENGINE GTS–150

Ref. No.	Part No.	Description	No. Used
★12	77–7550	Gasket – Engine Base	1
15	77–9240	Plug – Pipe	1
16	77–9330	Crankshaft	1
		Note: Order Part No. 77–7540 For Timing Gear Key	1
18	77–7560	Base – Engine	1
★20	77–7570	Seal – Oil	1
22	77–9070	Screw – Engine Base	1
25	77–7690	Piston Ass'y (Std.)	1
26	77–7700	Ring Set (Std.)	1
27	77–7710	Lock – Piston Pin	1
28	77–9340	Pin Ass'y – Piston	1
29	77–7670	Rod – Connecting	1
32	77–9350	Screw – Conn. Rod	1
46	77–7490	Gear – Cam	1
★116A	77–7660	O-Ring	1

Ref. No.	Part No.	Description	No. Used
188	77–9360	Screw – Hex Head	1
219	77–7500	Gear – Governor	1
227	77–7370	Lever Ass'y – Governor	1
230	77–7470	Washer	1
305	77–8310	Screw – Hex Head	1
523	77–7260	Dipstick – Oil	1
★524	77–7270	Seal – O-Ring	1
525	77–7280	Tube – Oil Filler	1
562	77–7380	Bolt – Governor Lever	1
592	77–7390	Nut – Hex	1
615	77–7480	Pushnut	1
616	77–7460	Crank – Governor	1
741	77–7530	Gear – Timing	1
★842	77–7300	Seal – O-Ring	1
979	77–7650	Cover – Oil Pump	1
1024	77–7640	Pump – Oil	1
	77–9020	Short Block	1

★ Included in Gasket Set–Part No. 77–8900

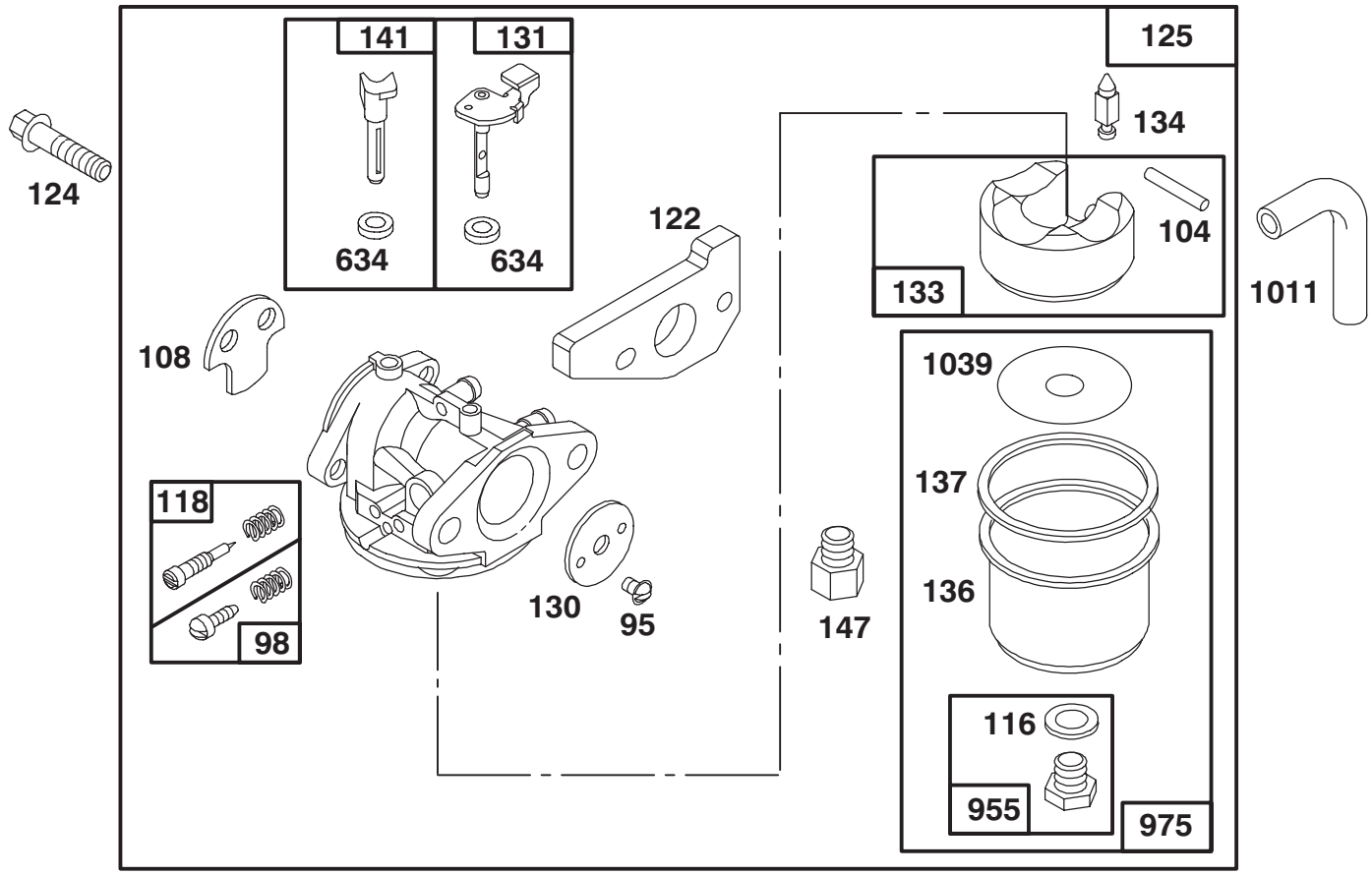

Assemblies include all parts shown in frames.

ENGINE GTS–150

Ref. No.	Part No.	Description	No. Used
95	77–8090	Screw – Valve Mtg.	1
98	77–8240	Screw – Idle Adj.	1
●104	77–8180	Pin – Float Hinge	1
108	77–8070	Valve – Choke	1
●◆116	77–8210	Sealing – Gasket	1
●118	77–8230	Valve & Spring – Needle	1
●122	77–7820	Adapter Ass'y	1
124	77–7970	Screw – Hex Head (Carb. Mtg.)	1
125	77–8050	Carburetor Ass'y	1
130	77–8080	Valve – Throttle	1
131	77–8160	Shaft – Throttle	1
133	77–8170	Float – Carburetor	1
●134	77–8110	Valve – Inlet (Includes Seat)	1

Ref. No.	Part No.	Description	No. Used
136	77–7240	Bowl – Fuel	1
●◆137	77–8200	Gasket – Float Bowl	1
141	77–8130	Shaft – Choke	1
147	77–8120	Adapter – Jet **Note:** For High Altitude Jet Order Part No. 77–9000	1
◆634	77–8150	Washer – Seal	1
955	77–8220	Screw – Hex Head	1
975	77–8190	Bowl Ass'y – Carburetor	1
1011	77–8040	Tube – Vent	1
●1039	77–7250	Limiter – Float	1

●Incl. in Carburetor Overhaul Kit–Part No. 77–8920
◆ Included in Carburetor Gasket Set–Part No. 77–8930

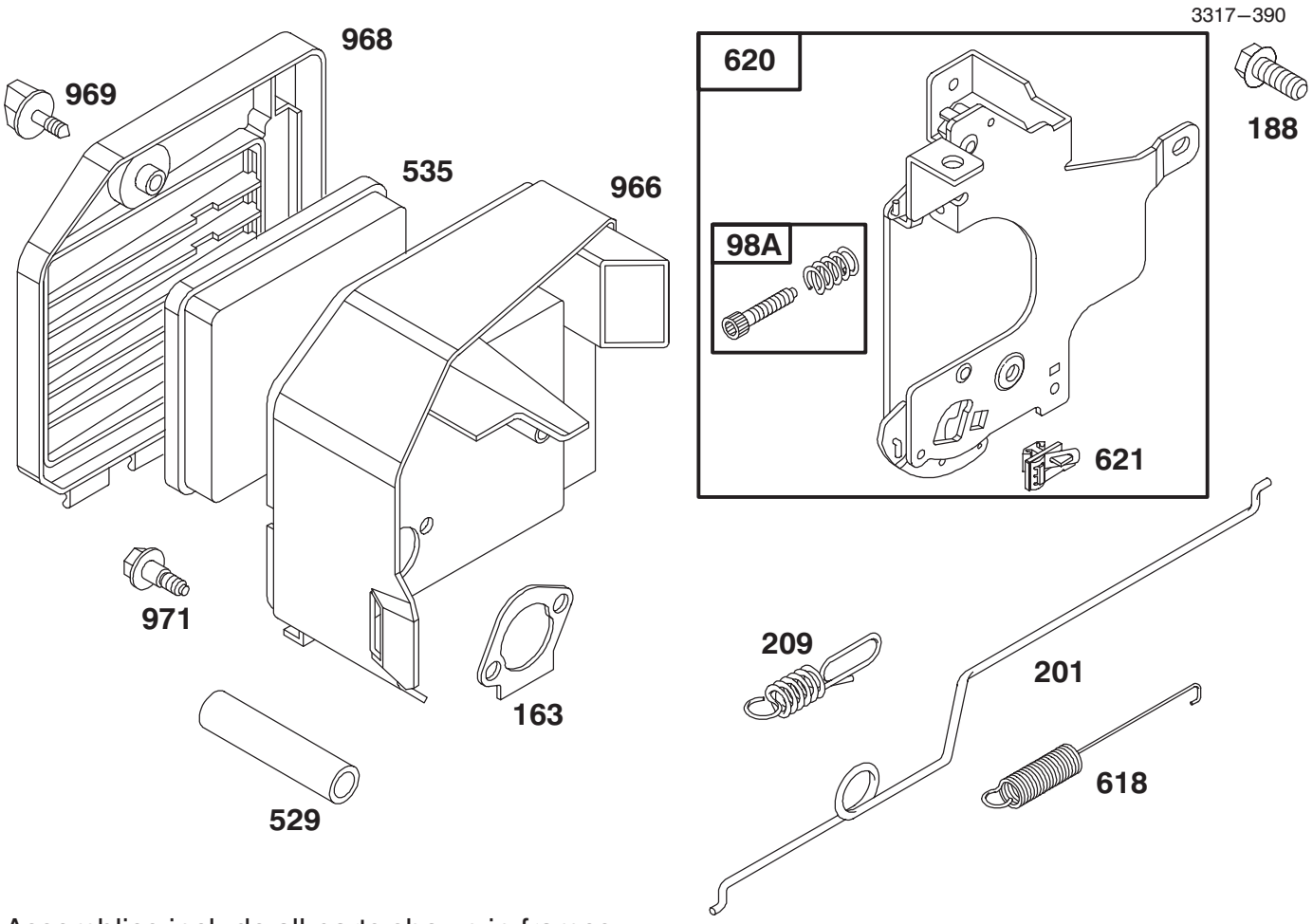

Assemblies include all parts shown in frames.

ENGINE GTS–150

Ref. No.	Part No.	Description	No. Used
98A	77–8020	Screw Ass'y – Speed Adj.	1
★163	77–7960	Gasket – Air Cleaner	1
188	77–9360	Screw – Hex. Head	1
201	77–7980	Link – Governor	1
209	77–7990	Spring – Governor	1
529	77–9470	Tube – Breather	1
535	77–7950	Element – Filter	1

Ref. No.	Part No.	Description	No. Used
618	77–8140	Spring – Choke	1
620	77–8000	Bracket – Carburetor	1
621	77–8010	Switch – Stop	1
966	77–7940	Base – Air Cleaner	1
968	77–7040	Cover – Air Cleaner	1
969	77–7920	Screw – Air Cleaner	1
971	77–7930	Screw – Air Cleaner	1

★ Included in Gasket Set–Part No. 77–8900

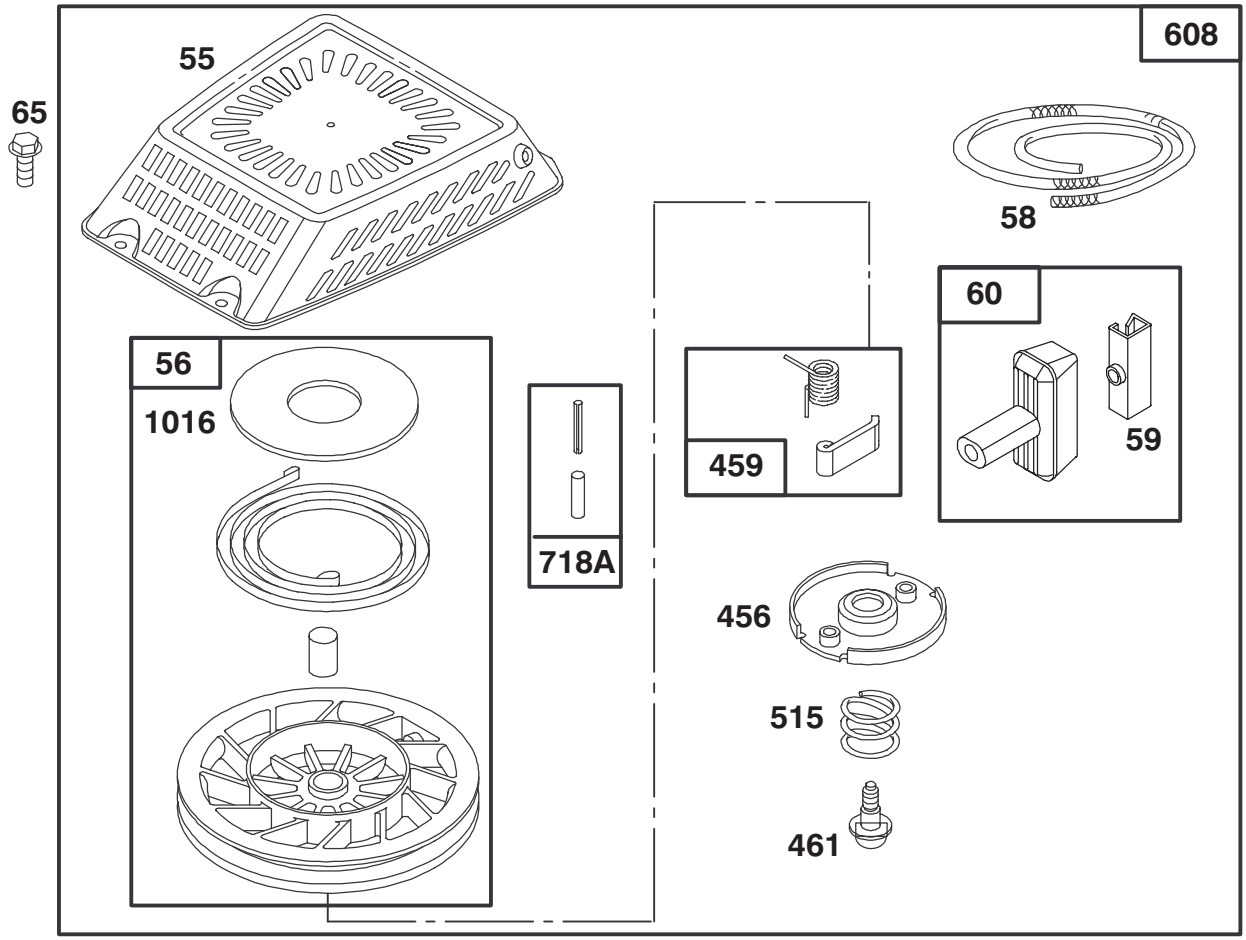

Assemblies include all parts shown in frames.

ENGINE GTS–150

Ref. No.	Part No.	Description	No. Used
55	77–8890	Housing – Rewind Starter	1
56	77–9270	Pulley – Rewind Starter	1
58	77–8480	Rope – Starter (Cut To Suit)	1
59	77–7210	Insert – Rewind Handle	1
60	77–8520	Handle – Rewind Starter	1
65	77–8300	Screw – Hex Head	1

Ref. No.	Part No.	Description	No. Used
456	77–8470	Retainer – Rewind Starter	1
459	77–8530	Pawl – Starter	1
461	77–8490	Screw – Rewind Starter	1
515	77–8500	Spring – Torsion	1
608	77–8840	Starter Ass'y – Rewind	1
718A	77–8550	Pin – Spring	1
1016	77–8570	Cover – Spring	1

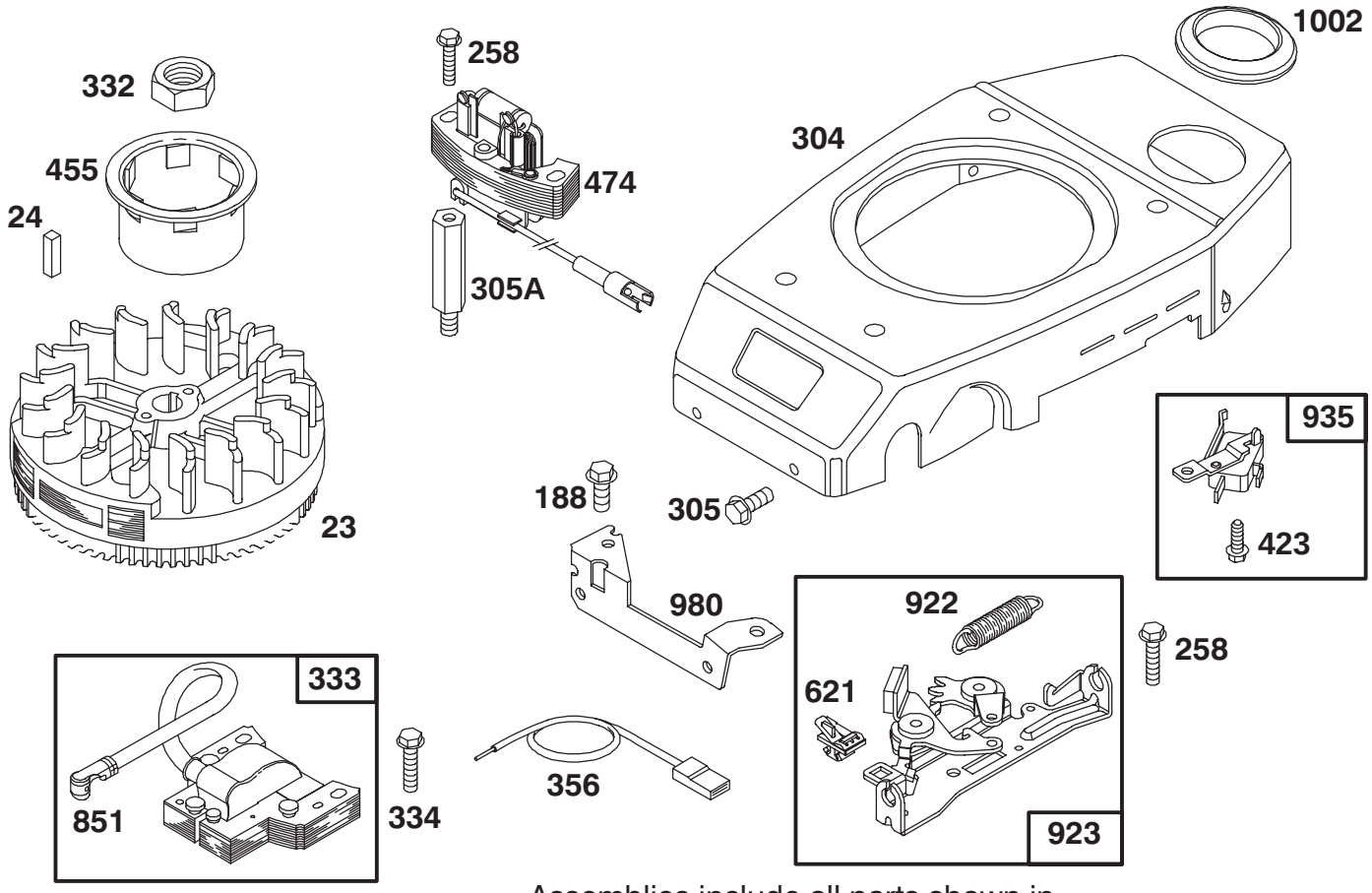

Assemblies include all parts shown in frames.

ENGINE GTS–150

Ref. No.	Part No.	Description	No. Used
23	77–8320	Flywheel	1
24	77–8340	Key – Flywheel	1
188	77–9360	Screw – Hex Head	1
258	77–8870	Screw – Hex Head	1
304	77–9480	Housing – Blower	1
305	77–8310	Screw – Hex Head	1
305A	77–8390	Stud	1
332	77–8360	Nut – Flywheel	1
333	77–8420	Armature – Magneto	1
334	77–7420	Screw – Armature Mtg.	1
356	77–8400	Wire – Ground	1

Ref. No.	Part No.	Description	No. Used
423	77–9520	Screw – Hex Head	1
455	77–8350	Cup – Starter	1
474	77–8370	Alternator	1
621	77–8010	Switch – Stop	1
851	77–9450	Terminal – Spark Plug	1
922	77–8860	Spring –Brake	1
923	77–9460	Brake Ass'y	1
935	77–9530	Switch – Starter	1
980	77–7140	Bracket – Blower Hsg.	1
1002	77–7180	Grommet	1

3317–390

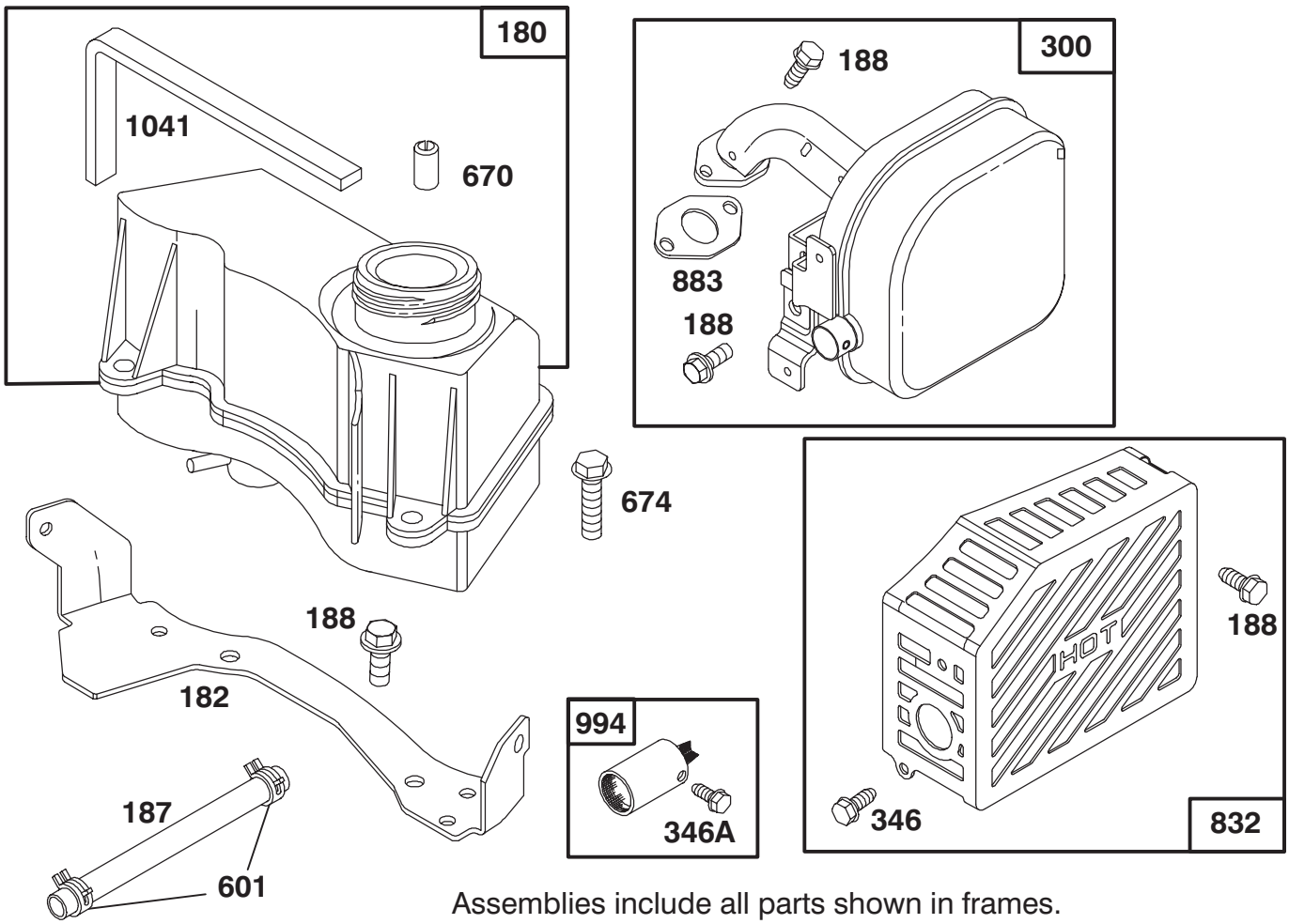

Assemblies include all parts shown in frames.

ENGINE GTS–150

Ref. No.	Part No.	Description	No. Used
180	77–7580	Tank Ass'y – Fuel	1
182	77–7170	Bracket – Fuel Tank	1
187	77–8620	Hose – Fuel (Cut To Suit)	1
188	77–9360	Screw – Hex Head	1
300	77–8640	Muffler – Exhaust	1
346	77–9430	Screw – Hex	1
346A	77–9050	Screw – Arrester Mtg.	1

Ref. No.	Part No.	Description	No. Used
601	77–8630	Clamp – Fuel Hose	1
670	77–9030	Spacer – Fuel Tank (Includes 2)	1
674	77–8600	Screw – Tank Mtg.	1
832	77–8660	Guard – Muffler	1
★883	77–7760	Gasket – Exhaust	1
994	77–9040	Arrester – Spark	1
★1041	77–8590	Seal – Foam	1

★ Included in Gasket Set–Part No. 77–8900

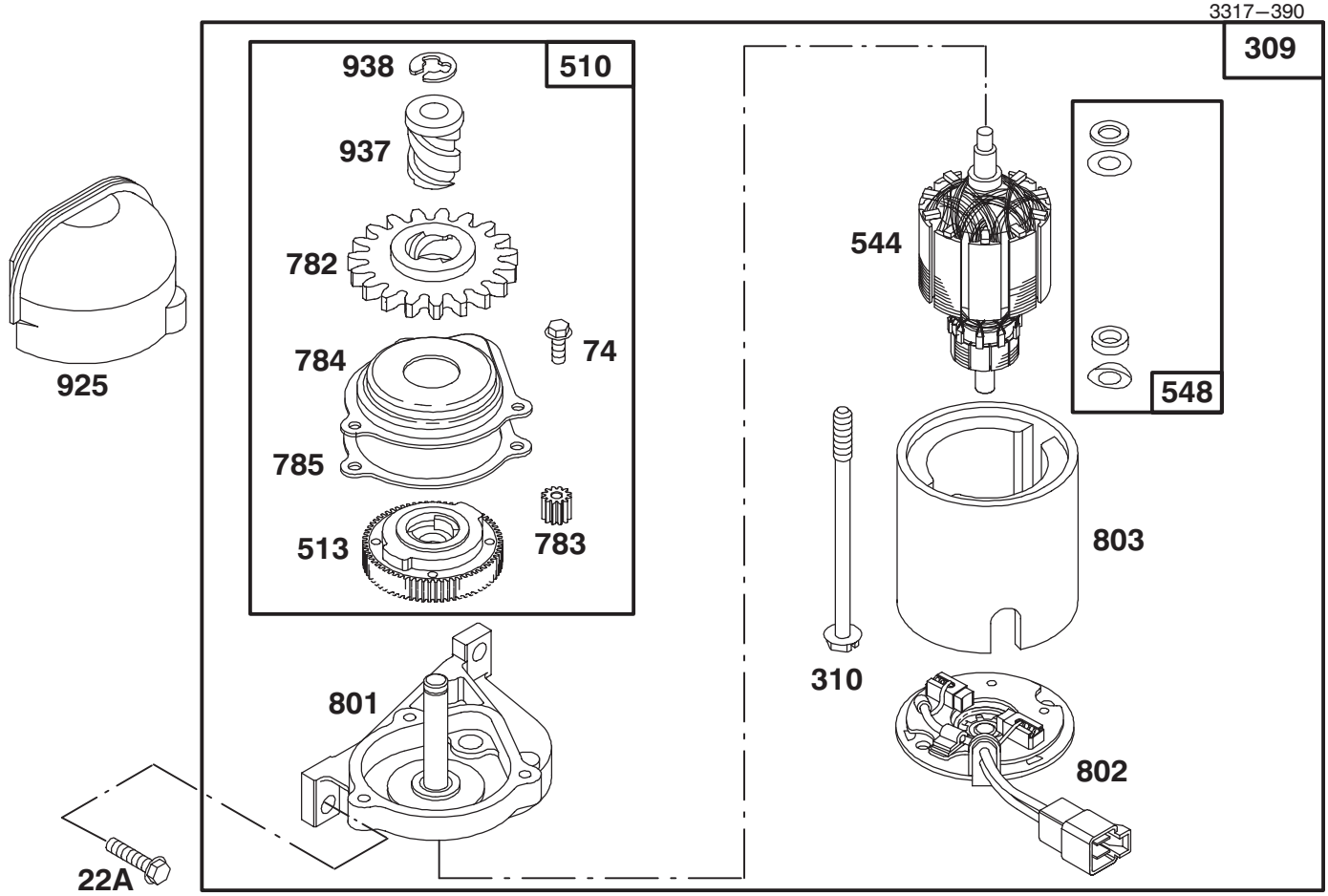

Assemblies include all parts shown in frames.

ENGINE GTS–150

Ref. No.	Part No.	Description	No. Used
22A	77–8720	Screw–Hex Head	1
74	77–8800	Screw–Hex Head	1
309	77–8670	Motor–Starter	1
310	77–8710	Screw–Hex Head	1
510	77–8910	Drive Kit	1
513	77–8770	Clutch Assembly	1
544	77–8730	Armature Assembly	1
548	77–8740	Washer Set	1
782	77–8810	Pinion–Starter	1

Ref. No.	Part No.	Description	No. Used
783	77–9540	Gear – Pinion	1
784	77–8780	Cover–Gear	1
785	77–8790	Gasket–Cover	1
801	77–8680	Bracket Assembly	1
802	77–8690	Head Assembly	1
803	77–8700	Shell and Magnet Ass'y	1
925	77–7200	Cover–Starter	1
937	77–8820	Spline–Starter	1
938	77–8830	Retainer–Lock	1

★ Included in Gasket Set–Part No. 77–8900

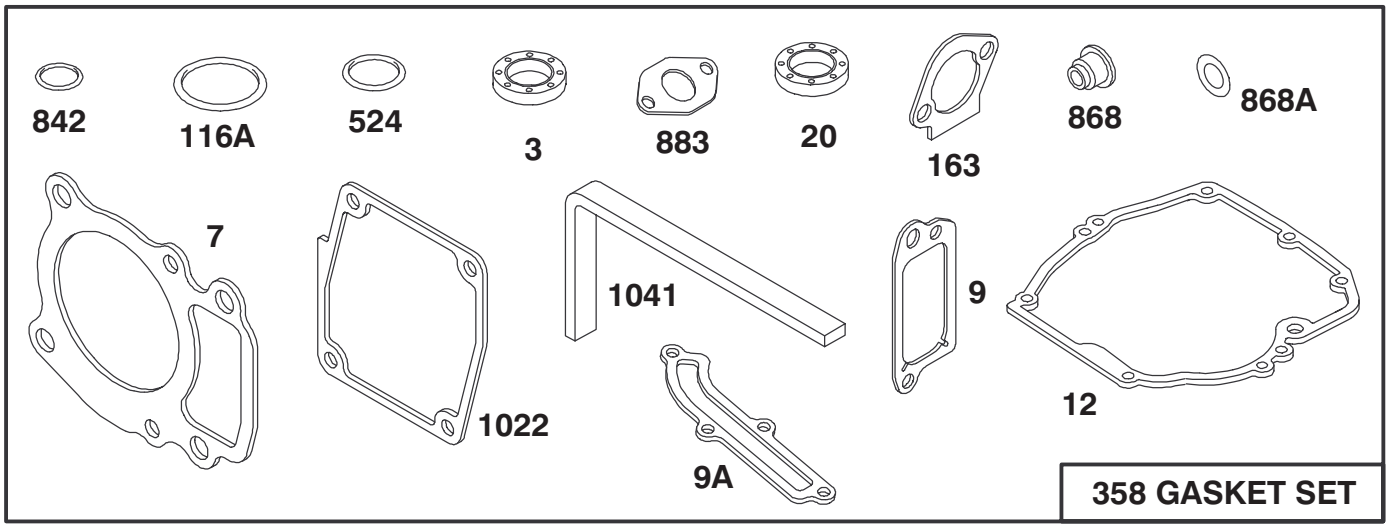

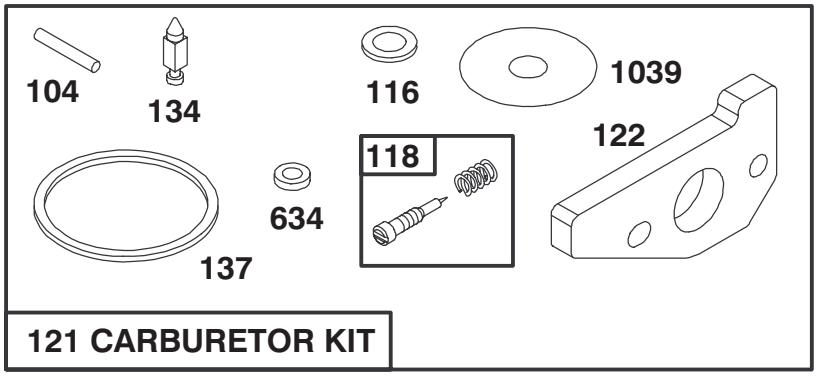

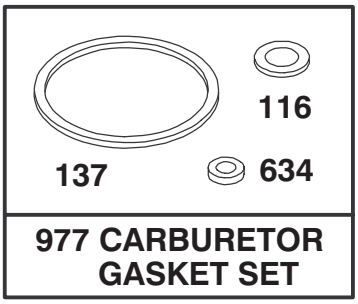

Assemblies include all parts shown in frames.

ENGINE GTS–150

Ref. No.	Part No.	Description	No. Used
★3	77–9060	Seal – Oil	1
★7	77–7740	Gasket – Cylinder Head	1
★9	77–9250	Gasket – Breather	1
★9A	77–7410	Gasket – Breather	1
★12	77–7550	Gasket – Engine Base	1
★20	77–7570	Seal – Oil	1
●104	77–8180	Pin – Float Hinge	1
●◆116	77–7660	Gasket – Sealing	1
★116A	77–8210	O-Ring	1
●118	77–8230	Valve and Spring – Needle	1
121	77–8920	Carburetor Kit	1
●122	77–7820	Adapter Assembly	1
●134	77–8110	Valve – Inlet (Includes Seat)	1

Ref. No.	Part No.	Description	No. Used
●◆137	77–8200	Gasket – Float Bowl	1
★163	77–7960	Gasket – Air Cleaner	1
358	77–8900	Gasket Set	1
★524	77–7270	Seal – O-Ring	1
◆634	77–8150	Washer – Seal	1
★842	77–7300	Seal – O-Ring	1
★868	77–7890	Seal Assy. – Valve	1
★868A	77–7900	Seal – Valve	1
★883	77–7760	Gasket – Exhaust	1
977	77–8930	Carburetor Gasket Set	1
★1022	77–7320	Gasket – Rocker Cover	1
●1039	77–7250	Limiter – Float	1
★1041	77–8590	Seal – Foam	1

●Included in Carburetor Kit–Part No. 77–8920
◆Incl. in Carburetor Gasket Set–Part No. 77–8930
★ Included in Gasket Set–Part No. 77–8900

TORO PART NUMBER INDEX

Part No.	Description	Pg. No.	Ref. No.	Qty.
614578	Gearcase	4	10	1
614596	Gear 34 Tooth	4	18	1
614668	Cover – Gear Case	4	2	1
614696	Shaft – Intermediate	4	4	1
14–9959	Wheel, Tire & Gear Assy.	3	22	2
16–5979	Housing – 48cm	1	2	1
16–8299	Panel – Control	5	28	1
19–4050	Knob	5	24	2
26–0672	Bolt – Blade	2	10	1
27–6230	Bolt – Wheel	3	23	2
27–6230	Bolt – Wheel	1	30	2
27–6250	Bushing – Wheel	3	24	4
27–6250	Bushing – Wheel	1	28	4
36–4780	Washer – Thrust	4	17	3
36–4791	Washer	4	5	2
38–7820	Bearing – Ball	4	15	1
40–1940	Washer – Wheel	1	27	2
46–1113	Wheel & Tire Assembly	1	29	2
46–5520	Lever – Traction	5	4	1
46–5780	Switch – Starter	5	27	1
46–6432	Screw – Handle	5	11	1
46–6980	Support – Cable	5	16	1
47–2890	Bushing – Sleeve	3	4	2
47–6730	Seal – Grease	3	5	2
48–2060	Bearing – Needle	3	14	2
49–2040	Screw – Taptite	4	1	4
55–3760	Pinion – 15 Tooth	4	3	1
55–7520	Battery Assembly	5	6	1
55–8180	Retainer – Battery	5	19	1
60–8750	Bushing	4	6	2
60–8850	Bushing – Output	4	9	2
60–8890	Gear – Bevel Pinion	4	16	1
62–6660	Spacer	4	11	1
62–7550	Pulley – Driver	2	12	1
63–8360	Key – Ignition	5	33	1
63–8590	Screw – Thread Forming	3	12	2
65–2720	Ring – Retaining	3	17	4
65–4710	Washer – Friction	3	15	2
65–4720	Spring – Compression	3	20	2
65–4740	Washer – Keyed Thrust	3	16	4
65–4750	Gear – Pinion	3	19	2
65–4760	Washer – Clutch	3	26	2
65–5210	Screw – Thread Forming	1	12	2
66–1700	Decal – Noise Rating	1	19	1
66–6040	Key – Rocking R.H.	3	*	1
66–6050	Key – Rocking L.H.	3	18	1
71–7630	Cap – Throttle Lower	5	9	1
71–7740	Spring – Counterbalance	3	31	1
71–7770	Plate – Rear Securing	3	27	2
71–7820	Pivot – Front	1	25	1
71–7840	Rod – Trigger	3	8	1
71–7860	Grip – Upper	1	13	1
71–7870	Grip – Lower	1	6	1
71–7890	Guide – Belt Rear	1	21	1
71–7900	Cap – Hinge Bolt L.H.	1	16	1
71–7910	Cap – Hinge Bolt R.H.	1	11	1
71–7920	Cover – Belt	1	3	1
71–7930	Trigger – H.O.C.	1	7	1
71–7940	Retainer – Blade	2	6	1
71–7960	Guide – Engine Belt	2	11	1
71–7970	Rod – Link	3	30	1
71–7980	Indicator – H.O.C.	3	33	1
71–7990	Ramp – Discharge	1	22	1
71–8040	Plate – Throttle	5	3	1
71–8060	Spring – Trigger Return	3	10	2
71–8080	Saddle – H.O.C.	3	11	1
71–8090	Mount – Handle L.H.	5	*	1
71–8100	Mount – Handle R.H.	5	23	1
71–8130	Bracket – Control	5	21	1
71–8200	Bracket – Switch Ignition	5	30	1
71–8280	Bracket – Battery	5	20	2
71–8450	Cover – Spring	3	32	1
71–8580	Spacer – Door	1	20	2
71–8830	Retainer – Shaft	1	24	2
71–9023	Handle Assembly	5	25	1
71–9450	V–Belt	3	34	1
71–9460	Bag – Grass	7	5	1
71–9470	Door – Bag	7	3	1
71–9480	Handle – Door	7	2	1
71–9600	Gear Case Ass'y Complete	4	*	1
71–9600	Gearcase Assembly	3	35	1
71–9610	Pulley – Half	4	12	2
71–9620	Shaft – Output	4	7	1
71–9630	Bracket – Traction	3	36	1
71–9800	Door – Discharge	1	15	1
71–9840	Spring – Door	1	18	2
71–9850	Retainer Belt	3	3	1
71–9860	Decal – 48cm	1	1	1
71–9864	Decal – Panel Key	5	29	1
71–9900	Frame – Bag	7	4	1
74–1660	Cover – Wheel	3	21	2
74–1670	Spacer – Wheel	3	25	2
77–8953	Engine – Complete	2	1	1
77–9020	Short Block	9		1
77–9550	Cover – Brake	2	18	1
80–4791	Harness – Wire	5	14	1
86–7990	Screw – Clamp	2	15	1
92–2289	Plate – Toro Logo	2	2	1
92–2298	Washer – Spring	6	4	1
92–2299	Lever – Shift	6	5	1
92–3132	Bolt – Shoulder	6	8	1
92–3133	Spacer – Traction Lever	6	9	1
93–4355	Decal – Recoil	2	3	1
92–9677	Rear Pivot Assembly L.H.	3	6	1
92–9680	Rear Pivot Assembly R.H.	3	1	1
92–9812	Stiffener – Blade	2	16	1
92–9813	Blade – 48cm	2	7	1
93–0335	Bail – Control SP	6	1	1
93–0339	Cover – Throttle Lower	5	8	1
93–0340	Stop – Pivot	6	6	1
93–1115	Control – Throttle	5	2	1
93–1116	Cable – Brake	5	13	1
93–1119	Cable – Traction	5	12	1
93–3772	Guide – Rope	5	22	1
93–4105	Decal – Danger	1	4	1
93–6651	Decal – Instruction	5	1	1
93–6653	Decal – Traction	6	10	1
93–6668	Decal – Battery	5	34	1
93–7198	Cap – Gas	2	13	1
218–461	Nut – Hex	5	32	1
2210–249	Clamp – Casing	2	14	1
2210–316	Stop – Rope	2	17	1
302–26	Fitting – Grease	3	2	2
321–52	Screw – Hex Hd. Cap	5	26	1

*Not Illustrated

TORO PART NUMBER INDEX (Cont.)

Part No.	Description	Pg. No.	Ref. No.	Qty.
322–29	Screw – Cap Hex. Hd.	1	17	2
3253–22	Washer – Lock	2	9	1
3254–5	Washer – Lock	5	31	1
3256–22	Washer – Flat	5	17	1
3256–24	Washer	4	13	1
3256–49	Washer – Flat	6	3	1
3256–70	Washer – Flat	6	7	2
3284–5	Pin – Roll	1	8	1
3290–378	Tie – Cable	5	15	3
3296–2	Nut – Lock	6	2	1
3296–5	Nut	4	14	1
3296–5	Nut – Lock	3	7	2
3296–5	Nut – Lock	1	26	2
3296–42	Nut – Lock	5	18	2
32112–11	Nut – Push	1	23	1
32112–13	Nut – Push	3	13	1
32121–114	Pin – Spirol	4	8	2
32144–4	Screw – Thread Forming	2	5	2
32144–4	Screw – Thread Forming	1	10	10
32144–4	Screw – Thread Forming	3	28	6
32144–31	Screw – Thread Forming	3	9	1
32144–70	Screw – Hex. Flange Hd.	1	5	1
32144–97	Screw – Phillips Pan Hd.	5	7	9
32144–97	Screw – Thread Forming	1	14	2
32144–98	Screw – Phillips Pan Hd.	5	5	4
32144–99	Screw – Phillips Pan Hd.	5	10	2
32144–102	Screw – Thread Forming	2	4	3
32144–111	Screw – Hex Washer Hd	7	1	5
32151–93	Ring – Grip	3	29	1

*Not Illustrated

PRODUCT CHANGES

In an effort to make improvements available to TORO owners as quickly as possible, minor changes are incorporated into Toro's products from time to time that do not become immediately shown in the Parts Catalog. If such a change has been made in your unit, which is not reflected in your manual, see your TORO Distributor or his Authorized TORO Service Dealer for information and part numbers.

COUNTRIES OTHER THAN THE UNITED STATES OR CANADA

Customers who have purchased TORO products exported from the United States or Canada should contact their Toro Distributor (Dealer) to obtain guarantee policies for your country, province or state. If for any reason you are dissatisfied with your Distributor's service or have difficulty obtaining guarantee information, contact the TORO importer. If all other remedies fail, you may contact us at The Toro Company.

MAINTENANCE RECORD

Date								

Compliance with Radio Interference Regulations Certified.
Certifie Conforme au Reglement sur le Brouillage Radioelectrique.

Litho in U.S.A.

MAINTENANCE RECORD

Date								