Form No. 3363-652 Rev A

CE Kit

Groundsmaster® 7200/7210 Traction Unit

Model No. 30392

Installation Instructions

Note: Determine the left and right sides of the machine from the normal operating position.

Safety

Safety and Instructional Decals

Safety decals and instructions are easily visible to the operator and are located near any area of potential danger. Replace any decal that is damaged or lost.

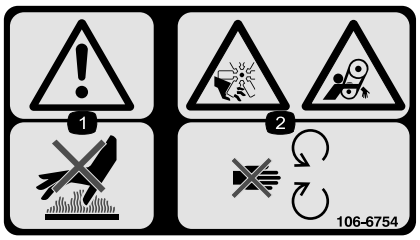

106-6754

1. Warning—do not touch the hot surface.
2. Cutting/dismemberment hazard, fan and entanglement hazard, belt—stay away from moving parts.



112-1689

1. Tipping hazard—do not operate on slopes greater than 14 degrees.

© 2009—The Toro® Company
8111 Lyndale Avenue South
Bloomington, MN 55420

Register at www.Toro.com.

CE

Original Instructions (EN)
Printed in the USA.
All Rights Reserved

Installation

Loose Parts

Use the chart below to verify that all parts have been shipped.

Procedure	Description	Qty.	Use
1	Latch locator bracket Bolt (5/16 x 3/4 inch) Lock nut (5/16 inch) Locking latch Hood support Bolt (5/16 x 2 inches) Washer (5/16 inch) Lock nut (5/16 inch)	1 1 1 1 1 2 4 2	Install the locking latch.
2	Floor locking latch Carriage bolt (1/4 x 3/4 inch) Lock nut (1/4 inch)	1 2 2	Install the floor plate locking latch (for 2008 and later models)
3	Hood handle Plastite screw (1/4 x 1.12 inch) Washer (5/16 inch) Clamp	1 2 2 1	Install the hood handle.
4	Bolt (5/16 x 1-1/4 inches) Retaining nut (5/16 inch) Push nut	2 2 2	Secure the belt covers.
5	Bolt (5/16 x 1-1/4 inches)	1	Secure the seat plate.
6	Bolt (5/16 x 1-1/4 inches)	1	Secure the foot rest.
7	Safety decal, 112-1689 Safety decal, 106-6754	1 1	Install the decals.

1

Installing the Hood Locking Latch

Parts needed for this procedure:

1	Latch locator bracket
1	Bolt (5/16 x 3/4 inch)
1	Lock nut (5/16 inch)
1	Locking latch
1	Hood support
2	Bolt (5/16 x 2 inches)
4	Washer (5/16 inch)
2	Lock nut (5/16 inch)

Procedure

1. Unlatch and raise the hood. Use the prop rod to hold it in place. Locate the upper (rear) metal frame support running across the underside of the hood.
2. In the upper, left corner of the metal frame, locate the hole drilled in the face of the support. Use a drill to open the hole to accept a 5/16 inch (8 mm) fastener.
3. Install the latch locator bracket as shown in Figure 1 using a bolt (5/16 x 3/4 inch) and lock nut (5/16 inch).
4. Use a pencil to mark the hood at the center hole on the punch-out of the latch locator bracket. Remove the latch locator bracket.
5. Pilot drill a hole in the plastic hood at the marked spot and then expand the hole to a diameter of 1 inch.
6. Remove the punch-out from the latch locator. Install the latch locator bracket to the frame as in Step 3 using the bolt (5/16 x 3/4 inch) and lock nut (5/16 inch).
7. Remove the locking nut from the latch assembly.
8. Install the locking latch through the hole drilled in the hood and the punched out hole in the latch locator bracket with the catch facing the forward.
9. Install the locking nut onto the bottom of the latch to secure it in place.

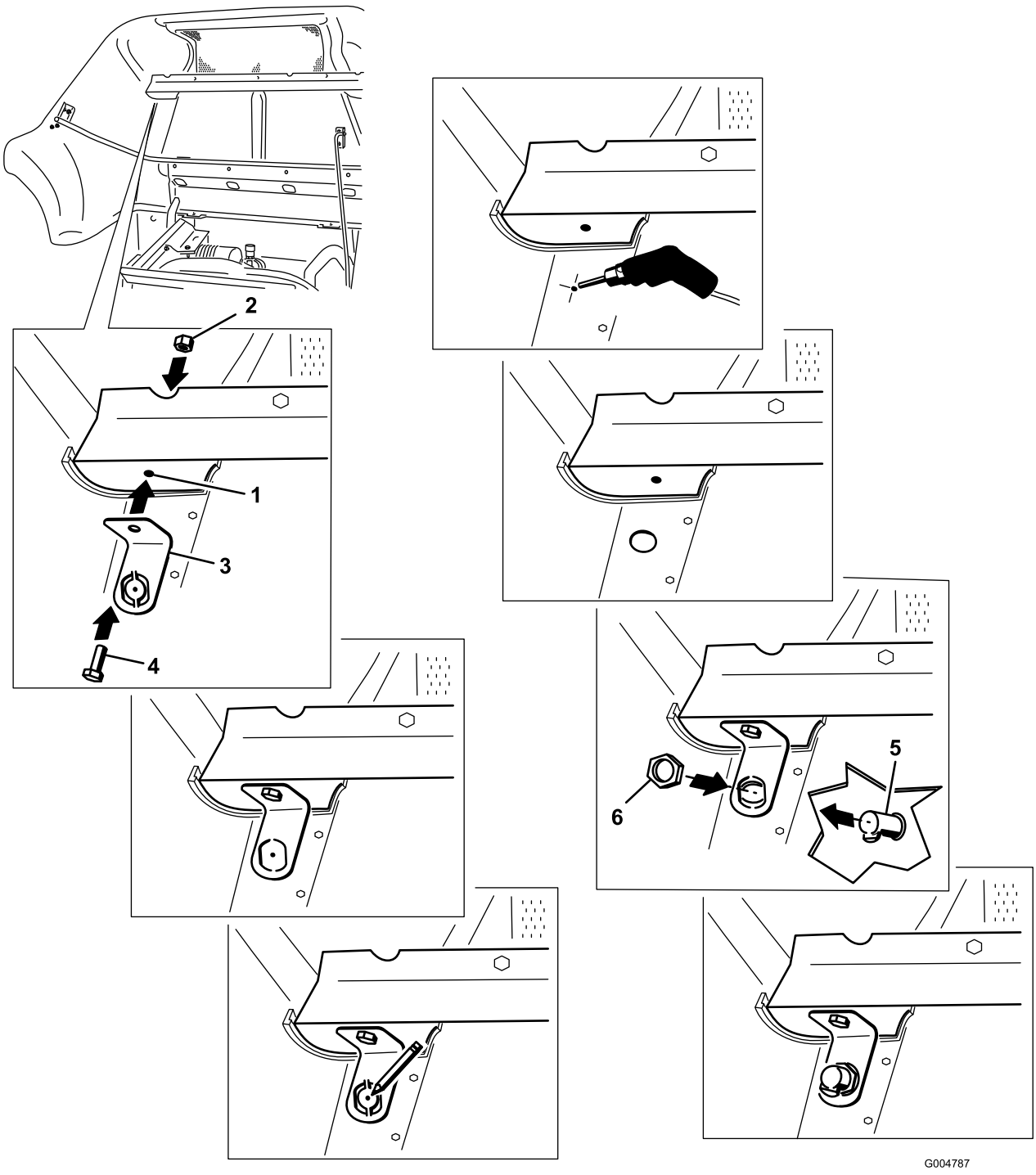

Figure 1

1. Hole in the face of the metal frame support
2. Lock nut (5/16 inch)
3. Latch locator bracket
4. Bolt (5/16 x 3/4 inch)
5. Locking latch, catch facing forward
6. Locking nut

10. Install the catch plate to the left hand frame member, directly below the installed latch, at the existing holes as shown in Figure 2. Secure the catch plate to the frame member with two bolts (5/16 x 2 inches), two washers (5/16 inch) and two lock nuts (5/16 inch).

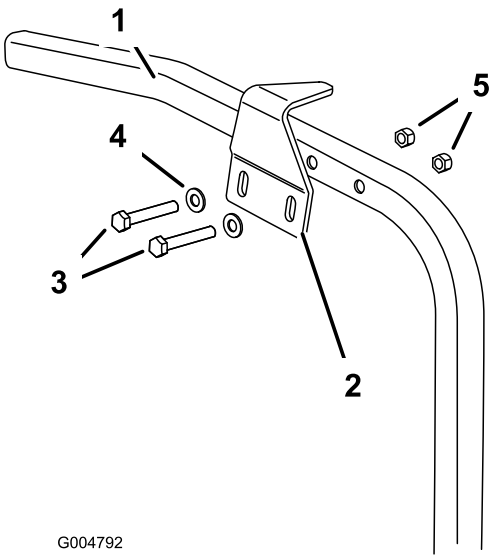

Figure 2

1. Left frame member
2. Catch plate
3. Bolt (5/16 x 2 inches)
4. Washer (5/16 inch)
5. Lock nut (5/16 inch)

Note: The bolts should be approximately centered in the slots of the catch plate.

11. Close the hood slowly to see if latch catches. If it does not, loosen the bolts securing the catch plate to the frame member and adjust the plate as necessary. Tighten the bolts and verify the latch catches.

2

Installing the Floor Plate Locking Latch (for 2008 and later models)

Parts needed for this procedure:

1	Floor locking latch
2	Carriage bolt (1/4 x 3/4 inch)
2	Lock nut (1/4 inch)

Procedure

1. Raise the floor plate (Figure 3).

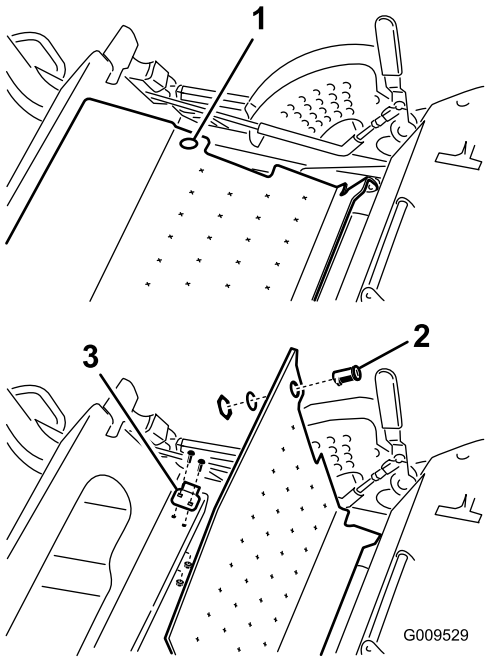

Figure 3

1. Hole in floor plate
2. Locking latch
3. Latch

2. Install the latch bracket to the frame using two carriage bolts (1/4 x 3/4 inch) and two lock nuts (1/4 inch) (Figure 3).
3. Insert the locking latch into the hole in the floor plate with the catch facing to the left.
4. Install the locking nuts onto the bottom of the latch to secure it in place.

   Note: The mounting holes in the latch are slotted so the latch can be adjusted.

3

Installing the Hood Handle

Parts needed for this procedure:

1	Hood handle
2	Plastite screw (1/4 x 1.12 inch)
2	Washer (5/16 inch)
1	Clamp

Procedure

1. Locate the hood support rail on the inside of the left side of the hood.

2. Measure up, from the support edge, along the rail 1-1/2 inches (3.8 cm) (Figure 4). Install the clamp around the rail at this location.
3. Using the clamp as a template, mark a spot in the hood and drill a 5/16 inch (8 mm) diameter hole.
4. Install a washer (5/16 inch) and plastite screw (1/4 x 1.12 inch) through the clamp and drilled hole in the hood and into the hood handle.
5. With the hood handle in the approximate position shown in Figure 4 mark the second spot to drill 4.8 inches (12.2 cm) from the initial drilled hole. Swing the hood handle out of position and drill a 0.3125 inch diameter hole at that position in the hood.
6. Install a washer onto the other plastite screw (1/4 x 1.12 inch) and through the hood. Secure the handle to the hood by tightening plastite screws.

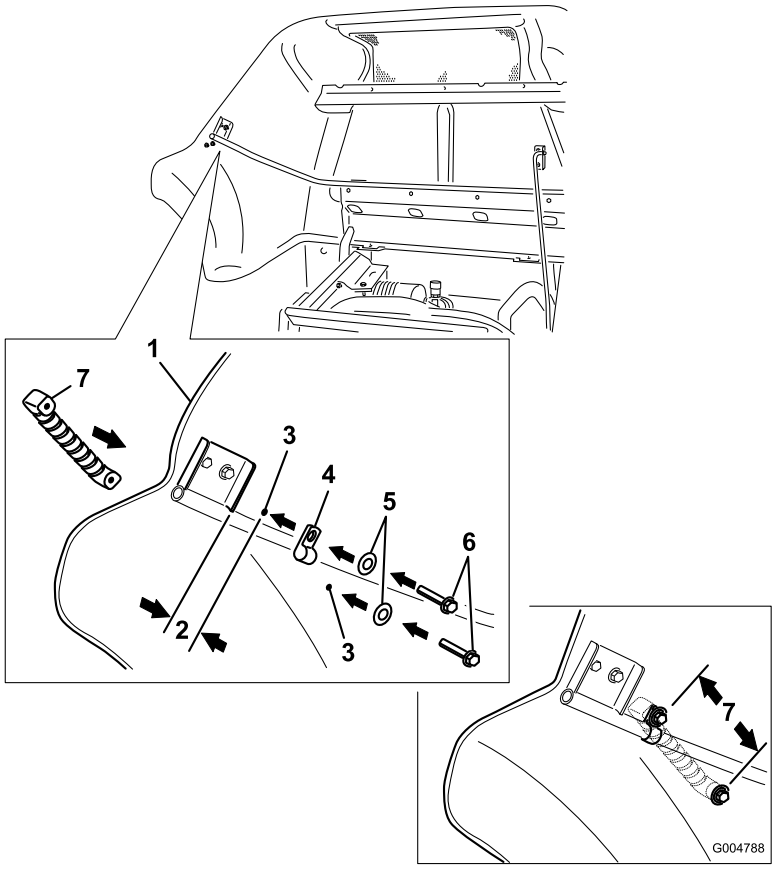

Figure 4

1. Hood
2. 1-1/2 inches (3.81 cm)
3. Drilled hole, 5/16 inch diameter (8 mm)
4. Clamp
5. Washer (5/16 inch)
6. Plastite screw (1/4 x 1.12 inch)
7. 4.8 inches (12.2 cm)

4

Securing the Belt Covers

Parts needed for this procedure:

2	Bolt (5/16 x 1-1/4 inches)
2	Retaining nut (5/16 inch)
2	Push nut

Procedure

Perform this procedure for the right and left side belt covers.

1. Remove the hand knobs securing the belt covers to the mower deck. Remove the belt covers.
2. Install a retaining nut at the forward hole in the deck bracket.

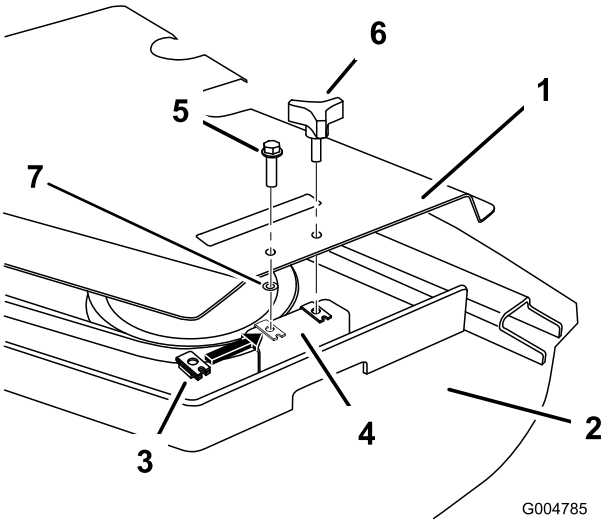

Figure 5

Left side belt cover shown.

1. Belt cover
2. Mower deck
3. Retaining nut
4. Deck bracket
5. Bolt (5/16 x 1-1/4 inches)
6. Hand knob
7. Push nut

3. Install the bolt into the belt cover using a push nut (5/16 inch). Install the belt cover with the bolt (5/16 x 1-1/4 inches). Replace the hand knob.

5

Securing the Seat Plate

Parts needed for this procedure:

1	Bolt (5/16 x 1-1/4 inches)

Procedure

Install a bolt in the seat plate to the secure it. Locate the hole in the front, right side of the seat plate, in front of the *Operator's Manual* tube (Figure 6). Install a bolt in the this hole to secure the seat plate.

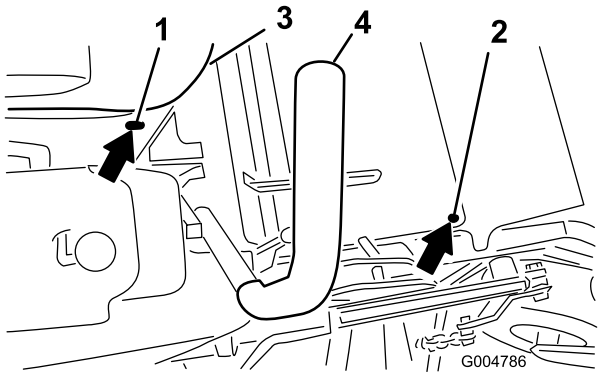

Figure 6

1. Hole in seat plate
2. Hole in foot rest (for 2007 models only)
3. Right side of seat
4. Right motion control lever

6

Securing the Foot Rest (2007 models only)

Parts needed for this procedure:

1	Bolt (5/16 x 1-1/4 inches)

Procedure

Install a bolt in the foot rest to the secure it. Locate the hole in the right, front corner of the foot rest (Figure 6). Install a bolt in this hole to secure the foot rest (for 2007 models only).

7

Installing the Decals

Parts needed for this procedure:

1	Safety decal, 112-1689
1	Safety decal, 106-6754

Procedure

Install each decal as follows:

1. Thoroughly clean the area where you will install the decal.
2. Dampen the area with water or mildly soapy water.
3. Peel the decal from the backing and install it in place.
4. Squeegee across the surface of the decal, starting at the center of the decal and working toward the edges, using overlapping strokes.

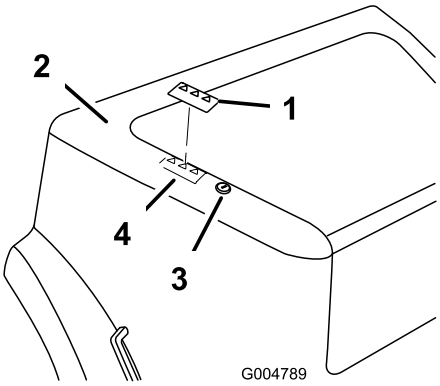

Figure 7

1. Decal 110-6754
2. Hood
3. Locking latch
4. Decal location

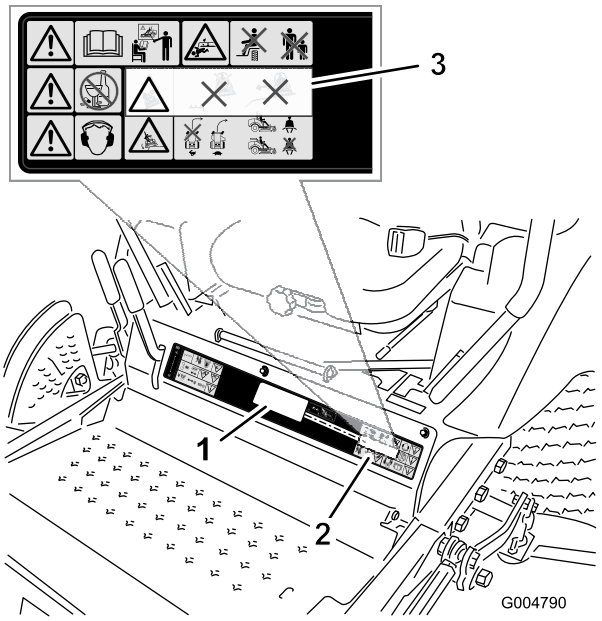

Figure 8

Install over existing decal at location shown

1. Decal 112-1689
2. Existing decal
3. Install decal 112-1689 at this location over existing decal