Form No. 3364-304 Rev A

TORO®

Count on it.

Operator's Manual

53cm Heavy-Duty Rear Bagger Lawn Mower

Model No. 22176TE—Serial No. 310000001 and Up

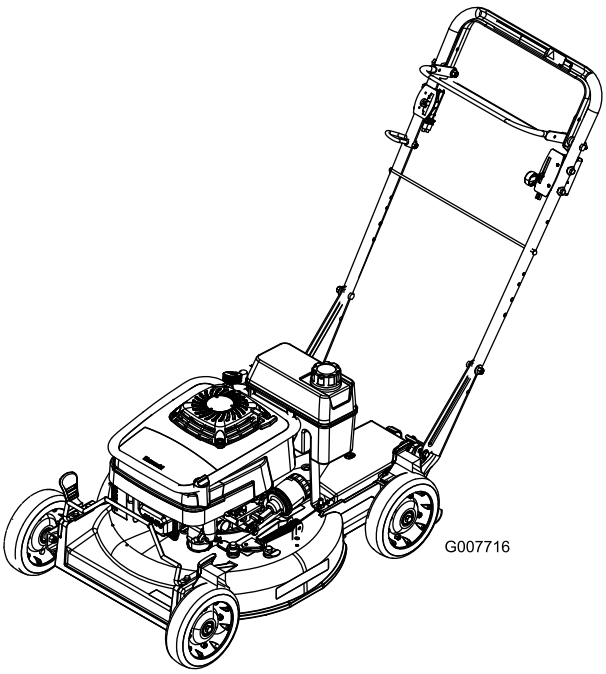

CE

To register your product or download an *Operator's Manual* or *Parts Catalog* at no charge, go to www.Toro.com.

Original Instructions (EN)

Introduction

This rotary-blade, walk-behind lawn mower is intended to be used by residential homeowners or professional, hired operators. It is designed primarily for cutting grass on well-maintained lawns on residential or commercial properties. It is not designed for cutting brush or for agricultural uses.

Read this information carefully to learn how to operate and maintain your product properly and to avoid injury and product damage. You are responsible for operating the product properly and safely.

You may contact Toro directly at www.Toro.com for product and accessory information, help finding a dealer, or to register your product.

Whenever you need service, genuine Toro parts, or additional information, contact an Authorized Service Dealer or Toro Customer Service and have the model and serial numbers of your product ready. Figure 1 identifies the location of the model and serial numbers on the product. Write the numbers in the space provided.

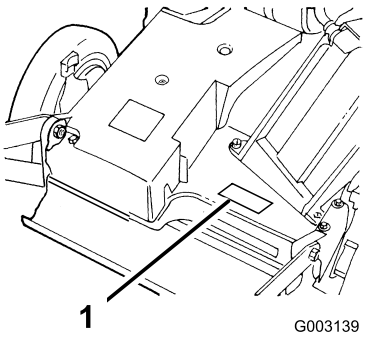

Figure 1

1. Model and serial number location

Model No. _____

Serial No. _____

This manual identifies potential hazards and has safety messages identified by the safety alert symbol (Figure 2), which signals a hazard that may cause serious injury or death if you do not follow the recommended precautions.



Figure 2

1. Safety alert symbol

This manual uses 2 words to highlight information. **Important** calls attention to special mechanical information and **Note** emphasizes general information worthy of special attention.

Contents

Introduction 2
Safety 3
- General Lawn Mower Safety 3
- Sound Pressure 5
- Sound Power 5
- Hand-Arm Vibration 5
- Safety and Instructional Decals 5

Setup 7
- 1 Installing the Handle 7
- 2 Installing the Starter Rope 8
- 3 Installing the Fuel Tank and the Fuel Line 8
- 4 Installing the Discharge Tunnel Plug 8
- 5 Filling the Crankcase with Oil 9

Product Overview 10
- Controls 10
- Specifications 10

Operation 11
- Checking the Engine Oil Level 11
- Filling the Fuel Tank with Gasoline 12
- Starting the Engine 13
- Stopping the Engine 13
- Using the Self-propel Drive 13
- Using the Discharge Tunnel Plug 14
- Adjusting the Cutting Height 14
- Using the Grass Bag 14
- Operating Tips 15

Maintenance 17
- Recommended Maintenance Schedule(s) 17
- Lubrication 18
  - Lubricating the Pivot Arms 18
  - Lubricating the Gear Case 18
- Engine Maintenance 18
  - Servicing the Air Filter 18
  - Changing the Engine Oil 19
  - Changing the Oil Filter 19
  - Servicing the Spark Plug 20
- Fuel System Maintenance 21

© 2009—The Toro® Company
8111 Lyndale Avenue South
Bloomington, MN 55420

Contact us at www.Toro.com.
Printed in the USA
All Rights Reserved

Emptying the Fuel Tank and Cleaning the Fuel Filter 21
Drive System Maintenance 21
Adjusting the Self-propel Drive 21
Controls System Maintenance 22
Adjusting the Blade Brake Cable 22
Blade Maintenance 22
Maintaining the Cutting Blade 22
Cleaning 24
Cleaning under the Lawn Mower Housing 24
Storage 25
Preparing the Fuel System 25
Preparing the Engine 25
General Information 25
Removing the Lawn Mower from Storage 25
Troubleshooting 26
..... 27
Conditions and Products Covered 28
Limited Warranty for Commercial Use 28
Instructions for Obtaining Warranty Service 28
Owner Responsibilities 28
Items and Conditions Not Covered 28
General Conditions 28

Safety

Improperly using or maintaining this mower can result in injury. To reduce the potential for injury, comply with these safety instructions.

Toro designed and tested this mower for reasonably safe service; however, failure to comply with the following instructions may result in personal injury.

To ensure maximum safety, best performance, and to gain knowledge of the product, it is essential that you and any other operator of the mower read and understand the contents of this manual before the engine is ever started. Pay particular attention to the safety alert symbol (Figure 2) which means Caution, Warning, or Danger—"personal safety instruction." Read and understand the instruction because it has to do with safety. Failure to comply with the instruction may result in personal injury.

General Lawn Mower Safety

The following instructions have been adapted from the ISO standard 5395.

This cutting machine is capable of amputating hands and feet and throwing objects. Failure to observe the following safety instructions could result in serious injury or death.

Training

- Read the instructions carefully. Be familiar with the controls and the proper use of the equipment.
- Never allow children or people unfamiliar with these instructions to use the mower. Local regulations can restrict the age of the operator.
- Keep in mind that the operator or user is responsible for accidents or hazards occurring to other people or their property.
- Understand explanations for all pictograms used on the mower or in the instructions.

Gasoline

WARNING-Gasoline is highly flammable. Take the following precautions.

- Store fuel in containers specifically designed for this purpose.
- Refuel outdoors only and do not smoke while refueling.
- Add fuel before starting the engine. Never remove the cap of the fuel tank or ad gasoline while the engine is running or when the engine is hot.

- If gasoline is spilled, do not attempt to start the engine but move the mower away from the area of spillage and avoid creating any source of ignition until gasoline vapors have dissipated.
- Replace all fuel tank and container caps securely.

Preparation

- While mowing, always wear substantial footwear and long trousers. Do not operate the equipment when barefoot or wearing open sandals.
- Thoroughly inspect the area where the equipment is to be used and remove all stones, sticks, wires, bones and other foreign objects.
- Before using, always visually inspect to see that guards, and safety devices, such as deflectors and/or grass catchers, are in place and working correctly.
- Before using, always visually inspect to see that the blades, blade bolts and cutter assembly are not worn or damaged. Replace worn or damaged blades and bolts in sets to preserve balance.

Starting

- Disengage all blade and drive clutches and shift into neutral before starting the engine.
- Do not tilt mower when starting the engine or switching on the motor, unless the mower has to be tilted for starting. In this case, do not tilt it more than absolutely necessary and lift only the part, which is away from the operator.
- Start the engine or switch on the motor carefully according to instructions and with feet well away from the blade(s) and not in front of the discharge chute.

Operation

- Never mow while people, especially children, or pets are nearby.
- Mow only in daylight or in good artificial light.
- Avoid operating the lawn mower in wet grass, where feasible.
- Stay alert for holes in the terrain and other hidden hazards.
- Do not put hands or feet near or under rotating parts. Keep clear of the discharge opening at all times.
- Never pick up or carry a lawn mower while the engine is running.
- Use extreme caution when reversing or pulling a pedestrian controlled lawn mower towards you.
- Walk, never run.
- Slopes:
  - Do not mow excessively steep slopes.
  - Exercise extreme caution when on slopes.
  - Mow across the face of slopes, never up and down and exercise extreme caution when changing direction on slopes.
  - Always be sure of your footing on slopes.
- Use low throttle settings when engaging the traction-clutch, especially in high gears. Reduce speed on slopes and in sharp turns to prevent overturning or loss of control.
- Stop the blade if the lawn mower has to be tilted for transportation when crossing surfaces other than grass and when transporting the lawn mower to and from the area to be mowed.
- Do not operate the engine in a confined space where dangerous carbon monoxide fumes can collect.
- Stop the engine
  - whenever you leave the lawn mower.
  - before refueling.
  - before removing the grass catcher.
  - before making height adjustment unless adjustment can be made from the operator's position.
- Stop the engine and disconnect the spark-plug wire.
  - before clearing blockages or unclogging chute.
  - before checking, cleaning or working on the lawn mower.
  - after striking a foreign object, inspect the lawn mower for damage and make repairs before restarting and operating the lawn mower.
  - if lawn mower starts to vibrate abnormally (check immediately).
- Reduce the throttle setting during engine shut down, and close the fuel valve at the conclusion of mowing.
- Lightning can cause severe injury or death. If you see lightning or hear thunder in the area, do not operate the machine; seek shelter.
- Watch out for traffic when crossing or near roadways.

Maintenance and Storage

- Keep all nuts, bolts and screws tight to be sure the equipment is in safe working condition.
- Do not use pressure cleaning equipment on machine.
- Never store the equipment with gasoline in the tank and inside a building where fumes can reach an open flame or spark.
- Allow the engine to cool before storing in any enclosure.

- To reduce the fire hazard, keep the engine, silencer, battery compartment and gasoline storage are free of grass, leaves, or excessive grease.
- Check grass catcher components and the discharge guard frequently and replace with manufacturer's recommended parts, when necessary.
- Replace worn or damaged parts for safety.
- Replace faulty silencers.
- If the fuel tank has to be drained, do this out-doors.
- Do not change the engine governor settings or overspeed the engine. Operating an engine at excessive speed can increase the hazard of personal injury.
- Be careful during adjustment of the lawn mower to prevent entrapment of the fingers between moving blades and fixed parts of the lawn mower.
- **To ensure the best performance and safety, purchase only genuine Toro replacement parts and accessories. Do not use *will fit* parts and accessories; they may cause a safety hazard.**

Sound Pressure

This unit has an sound pressure level at the operator's ear of 87 dBA, which includes an Uncertainty Value (K) of 1 dBA. The sound pressure level was determined according the procedures outlined in EN 836.

Sound Power

This unit has a guaranteed sound power level of 98 dBA, which includes an Uncertainty Value (K) of 1 dBA. The sound power level was determined according to the procedures outlined in ISO 11094.

Hand-Arm Vibration

Measured vibration level for the left hand = 5.5 m/s^2

Measured vibration level for the right hand = 4.0 m/s^2

Uncertainty Value (K) = 2.2 m/s^2

The measured values were determined according to the procedures outlined in EN 836.

Safety and Instructional Decals

Safety decals and instructions are easily visible to the operator and are located near any area of potential danger. Replace any decal that is damaged or lost.

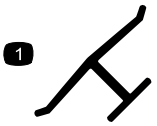

Manufacturer's Mark

1. Indicates the blade is identified as a part from the original machine manufacturer.



94-6046

1. To start the engine, hold the upper bail against the handle.
2. To engage the traction drive, pull the lower bail toward the handle.
3. To stop the engine, release the upper bail.



98-4387

1. Warning—wear hearing protection.

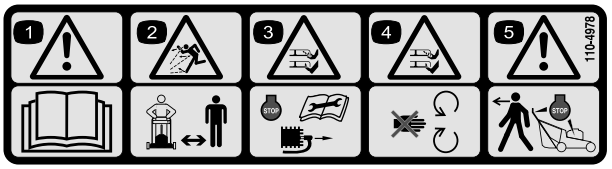

110-4978

1. Warning—read the *Operator's Manual.*
2. Thrown object hazard—keep bystanders a safe distance from the machine.
3. Cutting, dismemberment hazard of hand or foot—stop the engine and remove the spark plug wire before performing any maintenance on the machine.
4. Cutting, dismemberment hazard of hand or foot—stay away from moving parts.
5. Warning—stop the engine before leaving the machine.

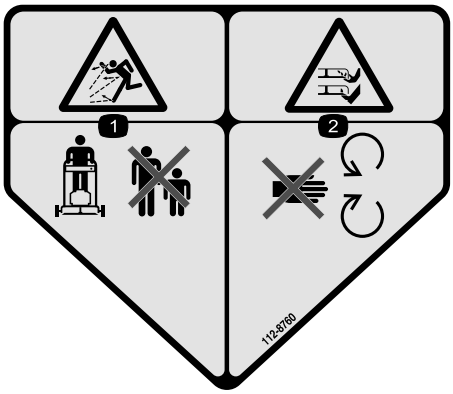

112-8760

1. Thrown object hazard—keep bystanders a safe distance from the machine.
2. Cutting/dismemberment of hand or foot—stay away from moving parts.

Setup

Loose Parts

Use the chart below to verify that all parts have been shipped.

Procedure	Description	Qty.	Use
1	Handle Bolt (5/16 x 1-1/4 inches) Washer Thin locknut (5/16 inch) Bolt (5/16 x 1-1/2 inches) Locknut (5/16 inch) Bag support rod Cap locknut Cable tie	1 2 4 2 2 2 1 2 1	Install the handle.
2	No parts required	–	Install the starter rope.
3	Self-tapping screw Fuel tank	2 1	Install the fuel tank and fuel line.
4	Discharge tunnel plug	1	Install the discharge tunnel plug.
5	No parts required	–	Fill the crankcase with oil.

Note: Determine the left and right sides of the machine from the normal operating position.

1

Installing the Handle

Parts needed for this procedure:

1	Handle
2	Bolt (5/16 x 1-1/4 inches)
4	Washer
2	Thin locknut (5/16 inch)
2	Bolt (5/16 x 1-1/2 inches)
2	Locknut (5/16 inch)
1	Bag support rod
2	Cap locknut
1	Cable tie

Procedure

1. Mount the handle to the outside of the lawn mower housing (using the bottom hole) with 2 bolts (5/16 x 1-1/4 inches), washers, and thin locknuts (5/16 inch) (Figure 3).

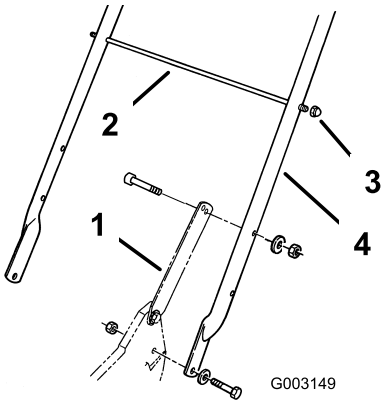

Figure 3

1. Handle latch
2. Bag support rod
3. Cap locknut (2)
4. Handle

2. Secure the handle latches to the handle with 2 bolts (5/16 x 1-1/2 inches), washers, and locknuts (5/16 inch) (Figure 3).

   Note: You can adjust the handle height for comfortable operation. Stand behind the handle to determine the height. To adjust the handle height, position the cap screws and the locknuts that secure the handle latches to the handle into the other mounting holes in the latches.

3. Slide the bag support rod through the second from the top mounting holes in the handle and secure each end with a cap locknut (Figure 3).
4. Use a cable tie to secure the control cables to the left handle below the bag support rod.

2

Installing the Starter Rope

No Parts Required

Procedure

Pull the starter rope through the rope guide on the handle (Figure 4).

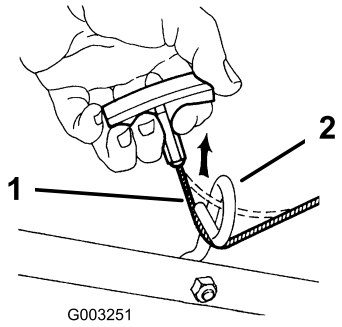

Figure 4

1. Starter rope
2. Rope guide

Note: To make the rope easier to install, squeeze the control bar on the handle.

3

Installing the Fuel Tank and the Fuel Line

Parts needed for this procedure:

2	Self-tapping screw
1	Fuel tank

Procedure

1. Slide the end of the fuel line onto the elbow fitting (Figure 5).

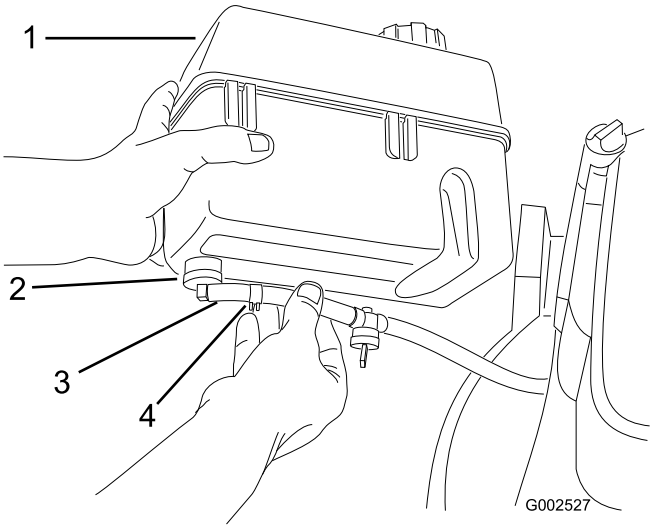

Figure 5

1. Fuel tank
2. Elbow fitting
3. Fuel line
4. Fuel line clamp

2. Secure the fuel line in place with the fuel line clamp (Figure 5).
3. Slide the plastic clips on the front of the fuel tank onto the fuel tank mount (Figure 6).

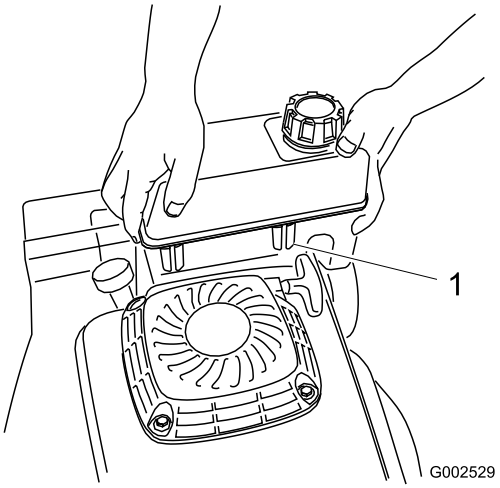

Figure 6

1. Plastic clip (2)

4. Secure the bottom of the fuel tank to the fuel tank bracket by installing the self-tapping screws from the bottom. **Torque the screws to 40 to 50 in-lb (4.5 to 5.6 N·m).**

4

Installing the Discharge Tunnel Plug

Parts needed for this procedure:

1	Discharge tunnel plug

Procedure

1. Open the discharge door by pulling forward on the handle and moving it rearward (Figure 7). Hold the discharge door handle to prevent the spring-loaded door from closing while you insert the plug.

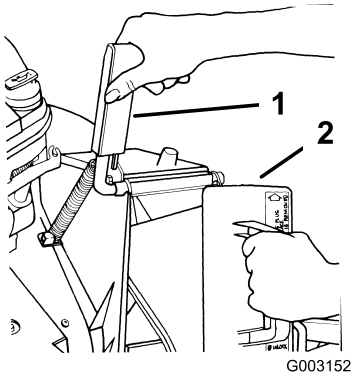

Figure 7

1. Discharge door handle 2. Plug, rotated clockwise

2. Since the plug is slightly wider than the discharge tunnel opening, rotate the plug clockwise slightly while inserting it (Figure 7).

   Note: Ensure that the arrow on the plug decal points upward.

3. Push the plug all the way in until the spring clip on the bottom of the plug clicks into place, locking the plug securely into the discharge tunnel (Figure 8).

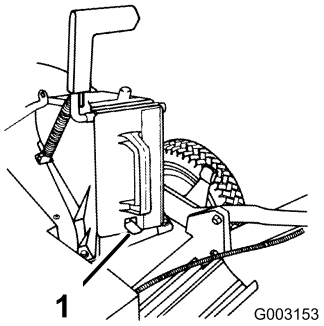

Figure 8

1. Spring clip

4. Release the discharge door handle to lock the top of the plug.

5

Filling the Crankcase with Oil

No Parts Required

Procedure

The engine crankcase is shipped without oil. You must fill it with approximately 30 ounces (0.88 l) of oil before starting the engine. Refer to Checking the Engine Oil Level in Operation (page 11) for oil specifications and instructions.

Product Overview

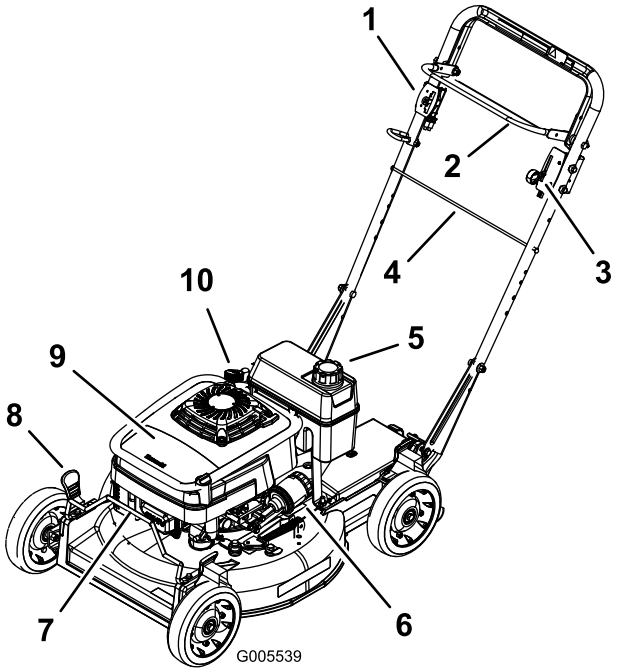

Figure 9

1. Ground speed control lever
2. Blade control bar
3. Throttle control lever
4. Bag aligning rod
5. Fuel tank
6. Oil filter
7. Spark plug
8. Cutting height lever
9. Air filter
10. Oil fill/dipstick

Controls

The blade control bar, control bar lock, ground speed control lever, throttle control lever, and traction control bar are on the upper handle as shown in (Figure 10).

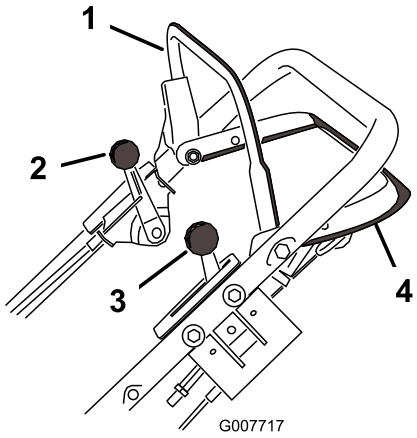

Figure 10

1. Blade control bar
2. Ground speed control lever
3. Throttle control lever
4. Traction control bar

The throttle settings are shown in (Figure 11).

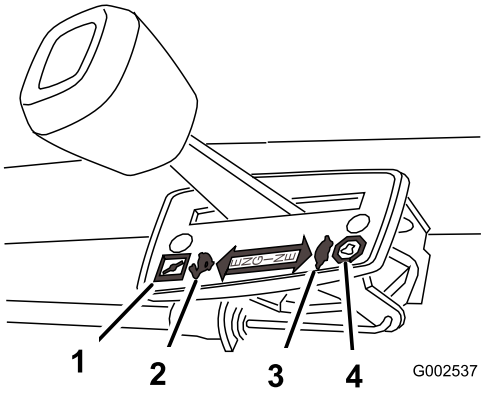

Figure 11

1. Choke
2. Fast
3. Slow
4. Stop

Specifications

Model	Weight	Length	Width	Height
22176TE	117 lb (53 kg)	60 in (152 cm)	22 in (56 cm)	40 in (102 cm)

Operation

Note: Determine the left and right sides of the machine from the normal operating position.

Each time before you mow, make sure that the self-propel drive and the blade control bail operate properly. When you release the blade control bail, the blade and self-propel drive should stop. If they do not, contact an Authorized Service Dealer.

⚠ CAUTION

This machine produces sound levels in excess of 85dBA at the operator's ear and can cause hearing loss through extended periods of exposure.

Wear hearing protection when operating this machine.



Figure 12

1. Warning—wear hearing protection.

Checking the Engine Oil Level

Service Interval: Before each use or daily

Initially, fill the crankcase with 30 oz. (0.88 l) of oil. Use only high-quality SAE 30 or SAE 10W30 weight detergent oil that has the American Petroleum Institute (API) service classification SF, SG, SH, or SJ.

Oil Capacity	
With oil filter	30 ounces (0.88 liters)
Without oil filter	24 ounces (0.70 liters)

Before each use, ensure that the oil level is between the Add and Full marks on the dipstick (Figure 13).

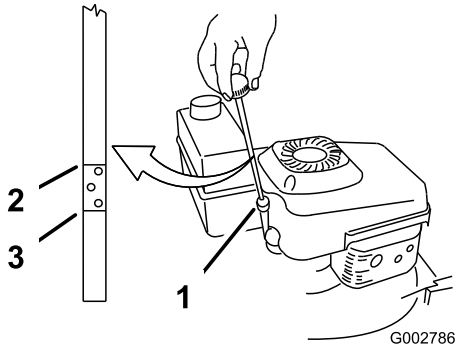

Figure 13

1. Dipstick
2. Full
3. Add

Note: When the crankcase is empty, pour about 3/4 of the crankcase capacity of oil in the crankcase, then follow the procedure in this section.

1. Move the lawn mower to a level surface.
2. Clean around the dipstick (Figure 13).
3. Remove the dipstick by rotating the cap counterclockwise and pulling it out.
4. Wipe the dipstick clean with a clean cloth.
5. Insert the dipstick into the filler neck, **but do not screw it in**.
6. Remove the dipstick and read the oil level on the dipstick (Figure 13).
7. If the oil level reading is below the Add mark on the dipstick, slowly pour only enough oil into the filler hole to raise the oil level to the Full mark on the dipstick.

   Important: Do not overfill the crankcase with oil and run the engine; engine damage will result. Drain the excess oil until the oil level on the dipstick reads Full.
8. Insert the dipstick into the filler neck and rotate the cap clockwise until it is tight.

Filling the Fuel Tank with Gasoline

For best results, use clean, fresh, lead-free gasoline with an octane rating of 87 or higher. To ensure freshness, purchase only the quantity of gasoline that you expect to use in 30 days. Using unleaded gasoline results in fewer combustion deposits and longer engine life. You may use leaded gasoline if unleaded gasoline is not available.

Important: Do not add oil to the gasoline.

Important: Do not use methanol, gasoline containing methanol, gasohol containing more than 10% ethanol, premium gasoline, or white gas. Using these fuels can damage the engine's fuel system.

Important: Do not use gasoline that has been stored since the last mowing season or longer.

⚠ DANGER

In certain conditions, gasoline is extremely flammable and highly explosive. A fire or explosion from gasoline can burn you and others and can damage property.

- **Fill the fuel tank outdoors, in an open area, and when the engine is cold. Wipe up any gasoline that spills.**
- **Do not fill the fuel tank completely full. Add gasoline to the fuel tank until the level is 1/4 to 1/2 in. (6 to 13 mm) below the bottom of the filler neck. This empty space in the tank allows the gasoline to expand.**
- **Never smoke when handling gasoline, and stay away from an open flame or where a spark may ignite the gasoline fumes.**
- **Store gasoline in an approved fuel container and keep it out of the reach of children.**
- **Never buy more than a 30-day supply of gasoline.**

⚠ DANGER

When fueling, under certain circumstances, a static charge can develop, igniting the gasoline. A fire or explosion from gasoline can burn you and others and damage property.

- **Always place gasoline containers on the ground and away from your vehicle before filling.**
- **Do not fill gasoline containers inside a vehicle or on a truck or trailer bed because interior carpets or plastic truck bed liners may insulate the container and slow the loss of any static charge.**
- **When practical, remove gasoline-powered equipment from the truck or trailer and refuel the equipment with its wheels on the round.**
- **If this is not possible, then refuel such equipment on a truck or trailer from a portable container, not from a gasoline dispenser nozzle.**
- **If you must use a gasoline dispenser nozzle, keep the nozzle in contact with the rim of the fuel tank or container opening at all times until fueling is complete.**

Use a fuel stabilizer/conditioner regularly during operation and storage. A stabilizer/conditioner cleans the engine during operation and prevents gum-like varnish deposits from forming in the engine during periods of storage.

Important: Do not use fuel additives other than a fuel stabilizer/conditioner. Do not use fuel stabilizers with an alcohol base such as ethanol, methanol, or isopropanol.

1. Clean around the fuel tank cap (Figure 14).

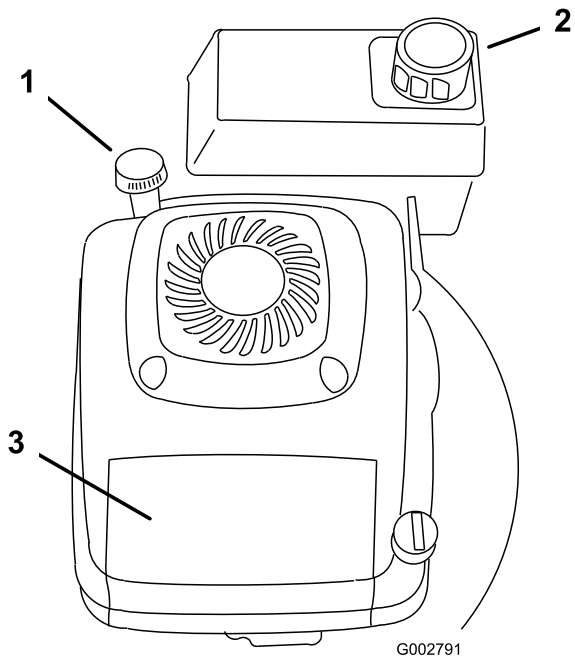

Figure 14

1. Oil fill/dipstick
2. Fuel tank cap
3. Air cleaner

2. Remove the cap from the tank.
3. Fill the fuel tank with unleaded gasoline to within 1/4 to 1/2 inch (6 to 13 mm) from the top of the tank. **Do not fill into the filler neck.**

   Important: Do not fill the tank more than 1/4 inch (6 mm) from the top of the tank because the gasoline must have room to expand.
4. Install the fuel tank cap and wipe up any spilled gasoline.

Starting the Engine

1. Connect the wire to the spark plug (Figure 15).

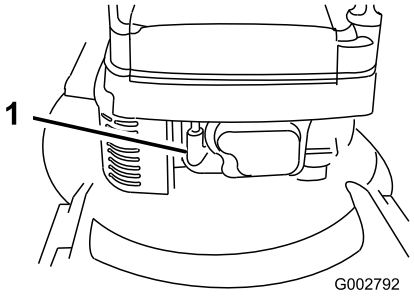

Figure 15

1. Spark-plug wire

2. Open the fuel valve (Figure 5)
3. Move the throttle control to the Choke position.
4. Move the ground speed control to the Neutral (N) position (Figure 10 and Figure 11).
5. Pull the starter handle lightly until you feel resistance, then pull it sharply.
6. Regulate the throttle and the ground speed control as desired when the engine starts.

   Note: If the engine fails to start after 3 pulls, repeat steps 3 through 6.

Stopping the Engine

1. Release the blade control bar and move the throttle control to the Off position.
2. Disconnect the wire from the spark plug if you do not use the lawn mower or if you leave it unattended.

Using the Self-propel Drive

The lawn mower has 3 ground speeds: 1 is slow, 2 is medium, and 3 is fast. the ground speed control is located on the upper handle (Figure 11).

1. Move the ground speed control to the Neutral (N) position.
2. Start the engine.
3. Squeeze the blade control bar against the handle to the Run/Drive position (Figure 16).

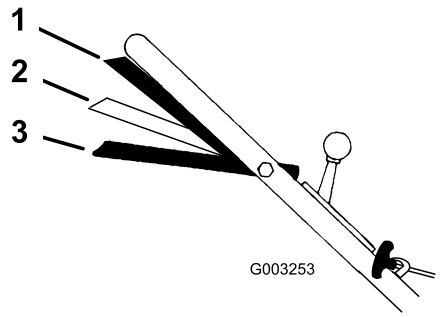

Figure 16

1. Run/Drive position
2. Run/Shift position
3. Stop position

Note: Do not shift speeds while you squeeze the blade control bar against the handle in the Run/Drive position; this can damage the transmission. Move the blade control bar to the Run/Shift position (Figure 16) when you change the ground speed.

Note: You can vary the ground speed by increasing or decreasing the distance between the control bar

and the handle. Lower the control bar to slow the lawn mower when making a turn or if the lawn mower is moving too fast for you. If you lower the control bar too far, the lawn mower stops self-propelling. Squeeze the control bar closer to the handle to increase the ground speed. When you hold the control bar tight against the handle, the lawn mower self-propels at the maximum ground speed. Move the ground speed control to the Neutral (N) position when you use the lawn mower for trimming and whenever you leave the lawn mower.

Using the Discharge Tunnel Plug

1. Stop the engine and wait for all moving parts to stop.
2. Insert the plug; refer to Installing the Discharge Tunnel Plug.
3. To remove the plug, move the discharge door handle rearward and lift up the spring clip on the bottom of the plug. When the plug is unlocked, pull it out of the discharge tunnel.

   Note: When grass is thick and lush, clippings may collect on and around the discharge tunnel plug. This may make removing the plug difficult. Clean the plug thoroughly after each use.

Adjusting the Cutting Height

Each wheel is adjusted individually with a wheel height adjustment lever. Cutting heights are 1 inch (25 mm), 1-1/2 inches (38 mm), 2 inches (51 mm), 2-1/2 inches (64 mm), 3 inches (76 mm), and 3-1/2 inches (89 mm).

⚠ DANGER

Adjusting the cutting height levers could bring your hands into contact with a moving blade and result in serious injury.

- **Stop the engine and wait for all movement to stop before adjusting the cutting height.**
- **Do not put your fingers under the housing when adjusting the cutting height.**

1. Pull the wheel height adjustment lever toward the wheel (Figure 17) and move it to the desired setting.

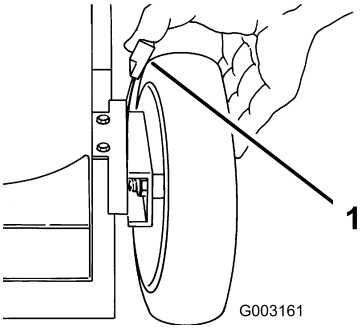

Figure 17

1. Wheel height adjustment lever

2. Release the wheel height adjustment lever and seat it securely in the notch.
3. Adjust all the wheels to the same cutting height setting.

Using the Grass Bag

Occasionally, you may wish to use the grass bag for bagging extra long grass, lush grass, or leaves.

Installing the Grass Bag

1. Stop the engine and wait for all moving parts to stop.
2. Ensure that the discharge door handle is fully forward and that the pin is engaged in the catch (Figure 18).

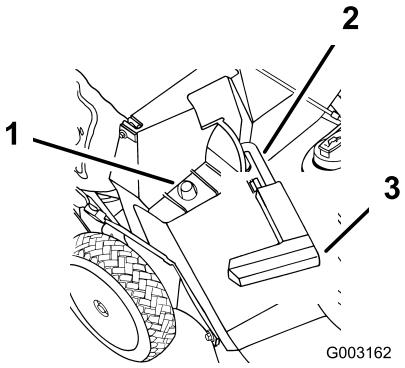

Figure 18

1. Bag frame on retaining post
2. Pin engaged in catch
3. Handle fully forward; discharge door closed

3. Slide the hole in the bag frame onto the retaining post on the discharge tunnel (Figure 18).
4. Set the rear of the bag frame onto the bag support rod.
5. Pull the discharge door handle forward until the pin clears the catch, and move the handle rearward until the pin locks in the bag notch (Figure 19).

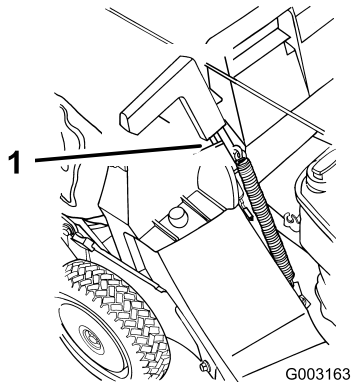

Figure 19

1. Pin locked in bag notch

Note: The discharge door in the lawn mower housing is now open.

Mowing with the Grass Bag

⚠ WARNING

A worn grass bag could allow small stones and other similar debris to be thrown in the operator's or bystander's direction and result in serious personal injury or death to the operator or bystanders.

Check the grass bag frequently. If it is damaged, install a new Toro replacement bag.

Removing the Grass Bag

1. Stop the engine and wait for all moving parts to stop.
2. Raise the discharge door handle and move it forward to engage the pin with the catch (Figure 18).
3. Grasp the handles at the front and the rear of the bag and lift the bag off the lawn mower.
4. Gradually tip the bag forward to empty the clippings.
5. To install the bag, refer to Installing the Grass Bag.

⚠ DANGER

If the discharge door does not close completely, the lawn mower could throw objects, causing serious personal injury or death.

If you cannot close the door because the grass clippings clog the discharge area, stop the engine and gently move the discharge door handle back and forth until you can close the door completely. If you still cannot close the door, remove the obstruction with a stick, not your hand.

⚠ DANGER

The lawn mower can throw grass clippings and other objects through an open discharge tunnel. Objects thrown with enough force could cause serious personal injury or death to the operator or bystander.

Never open the door on the discharge tunnel when the engine is running.

Operating Tips

General Tips

- Review the safety instructions and read this manual carefully before operating the lawn mower.
- Clear the area of sticks, stones, wire, branches, and other debris that the blade could hit and throw.
- Keep everyone, especially children and pets, away from the area of operation.
- Avoid striking trees, walls, curbs, or other solid objects. Never deliberately mow over any object.
- If the lawn mower strikes an object or starts to vibrate, immediately stop the engine, disconnect the wire from the spark plug, and examine the lawn mower for damage.
- Maintain a sharp blade throughout the cutting season. Periodically file down nicks on the blade.
- Replace the blade when necessary with an original Toro replacement blade.
- Mow only dry grass or leaves. Wet grass and leaves tend to clump on the yard and can cause the lawn mower to plug or the engine to stall.

⚠ WARNING

Wet grass or leaves can cause serious injury if you slip and contact the blade.

Mow only in dry conditions.

- Clean the underside of the lawn mower deck after each mowing. See Cleaning the Underside of the Lawn Mower Housing.
- Keep the engine in good running condition.
- Set the engine speed to the fastest position for the best cutting results.

⚠ WARNING

Operating a lawn mower with its engine running at a speed greater than the factory setting can cause the lawn mower to throw a part of the blade or engine into the operator's or bystander's area and result in serious personal injury or death.

- **Do not change the engine speed setting.**
- **If you suspect the engine speed is faster than normal, contact an Authorized Service Dealer.**

- Clean the air filter frequently. Mulching stirs up more clippings and dust which clogs the air filter and reduces engine performance.

Cutting Grass

- Grass grows at different rates at different times of the year. In the summer heat, it is best to cut grass at the 2 inch (51 mm), 2-1/2 inch (64 mm), or 3 inch (76 mm) cutting height settings. Cut only about a third of the grass blade at a time. Do not cut below the 2 inch (51 mm) setting unless the grass is sparse or it is late fall when grass growth begins to slow down.
- When cutting grass over 6 inches (15 cm) tall, first mow at the highest cutting height setting and walk slower; then mow again at a lower setting for the best lawn appearance. If the grass is too long and the leaves clump on top of the lawn, the lawn mower may plug and cause the engine to stall.
- Alternate the mowing direction. This helps disperse the clippings over the lawn for even fertilization.

If the finished lawn appearance is unsatisfactory, try one or more of the following:

- Sharpen the blade.
- Walk at a slower pace while mowing.
- Raise the cutting height on your lawn mower.
- Cut the grass more frequently.
- Overlap cutting swaths instead of cutting a full swath with each pass.
- Set the cutting height on the front wheels one notch lower than the rear wheels. For example, set the front wheels at 2 inches (51 mm) and the rear wheels at 2-1/2 inches (64 mm).

Cutting Leaves

- After cutting the lawn, ensure that half of the lawn shows through the cut leaf cover. You may need to make more than one pass over the leaves.
- For light leaf coverage, set all the wheels at the same cutting height setting.
- If there are more than 5 inches (12.7 cm) of leaves on the lawn, set the front cutting height 1 or 2 notches higher than the rear cutting height. This makes it easier to feed the leaves under the lawn mower deck.
- Slow down your mowing speed if the lawn mower does not cut the leaves finely enough.

Maintenance

Note: Determine the left and right sides of the machine from the normal operating position.

Recommended Maintenance Schedule(s)

Maintenance Service Interval	Maintenance Procedure
After the first 8 hours	• Change the engine oil.
Before each use or daily	• Check the engine oil level. • Ensure that the engine stops within 3 seconds after releasing the blade control bar. • Inspect the mower blades for wear or damage. • Clean under the lawn mower housing. • Clean the discharge tunnel and plug.
Every 25 hours	• Lubricate the pivot arms. • Clean the foam pre-cleaner (more frequently in dusty conditions).
Every 50 hours	• Change the engine oil (more often in dusty conditions). • Check the fuel hose and replace it if necessary.
Every 100 hours	• Lubricate the gear case. • Clean the paper air filter (more frequently in dusty conditions). • Change the engine oil and oil filter. • Check the spark plug. • Clean the fuel filter. • Adjust the self-propel drive. • Adjust the blade brake cable. • Clean the air cooling fins.
Every 300 hours	• Replace the paper air filter (more frequently in dusty conditions).
Yearly or before storage	• Empty the fuel tank.

Important: **Refer to your *Engine Operator's Manual* for additional maintenance procedures.**

⚠ CAUTION

If you leave the wire on the spark plug, someone could accidently start the engine and seriously injure you or other bystanders.

Disconnect the wire from the spark plug before you do any maintenance. Set the wire aside so that it does not accidently contact the spark plug.

Lubrication

Lubricating the Pivot Arms

Service Interval: Every 25 hours

After every 25 operating hours or when the season ends, lubricate the pivot arms.

1. Move the rear wheel cutting height levers to the center setting.
2. Wipe the grease fittings with a clean rag (Figure 20).

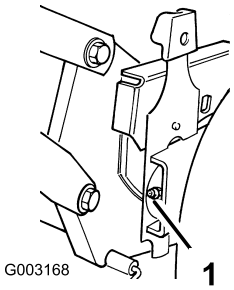

Figure 20

1. Grease fitting

3. Install a grease gun onto the fitting and gently apply 2 or 3 pumps of #2 multi-purpose lithium-base grease.

   Important: Excessive grease pressure may damage the seals.

Lubricating the Gear Case

Service Interval: Every 100 hours

After every 100 operating hours, grease the gear case.

1. Remove the grass bag.
2. Install a grease gun onto the fitting through the belt cover opening (Figure 21).

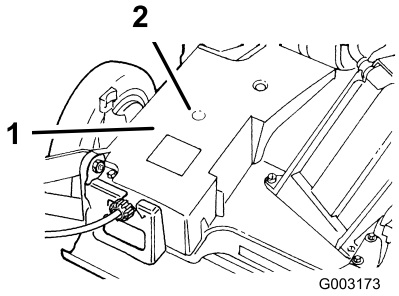

Figure 21

1. Belt cover
2. Grease fitting

3. Gently apply one to 2 pumps of #2 multi-purpose lithium-base grease.
4. Install the grass bag.

Engine Maintenance

Servicing the Air Filter

Service Interval: Every 25 hours
Every 100 hours
Every 300 hours

Clean the foam pre-cleaner every 25 operating hours. Clean the paper air filter every 100 operating hours. Replace the paper air filter once every season or every 300 operating hours; replace it more frequently in dusty conditions.

Important: Do not operate the engine without the air filter assembly; extreme engine damage will occur.

1. Stop the engine and wait for all moving parts to stop.
2. Disconnect the wire from the spark plug (Figure 15).
3. Remove the screw that secures the air cleaner cover (Figure 22).

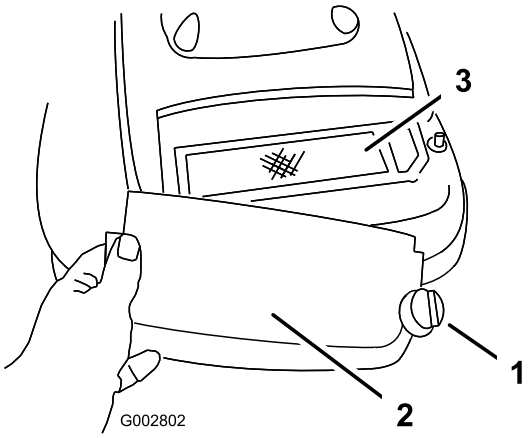

Figure 22

1. Screw
2. Cover
3. Paper air filter

4. Remove the cover and clean it thoroughly (Figure 22).
5. Remove the paper air filter and discard it (Figure 23).

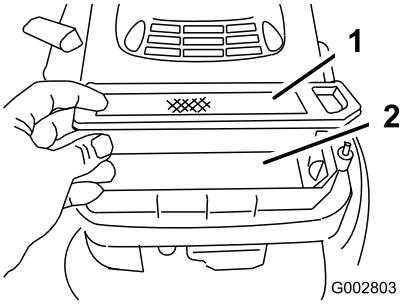

Figure 23

1. Paper air filter
2. Foam pre-cleaner

Important: Do not try to clean a paper filter.

6. Remove the foam pre-cleaner and wash it with a mild detergent and water, then blot it dry.
7. Saturate the pre-cleaner with oil, then squeeze it (do not twist) to remove the excess oil.
8. Install the foam pre-cleaner.
9. Install the new paper air filter.
10. Install the cover and secure it with the screw.

Changing the Engine Oil

Service Interval: After the first 8 hours
Every 50 hours

Change the oil after the first 8 operating hours and than after every 50 operating hours or every season (more frequently in dusty or dirty conditions).

1. Run the engine to warm the engine oil.

Note: Warm oil flows better and carries more contaminants.

⚠ WARNING

Oil may be hot after engine has been run, and contact with hot oil can cause severe personal injury.

Avoid contacting the hot engine oil when you drain it.

2. Stop the engine and wait for all moving parts to stop.
3. Disconnect the wire from the spark plug (Figure 15).
4. Place a suitable drain pan under the right side of the mower.
5. Remove the dipstick by rotating the cap counterclockwise and pulling it out.
6. Tip the mower onto its **right** side to drain the oil into the drain pan.

Note: You can also remove the oil from the crankcase using an oil extractor.

7. Return the mower to its operating position.
8. Insert the dipstick into the filler neck and rotate the cap clockwise until it is tight.
9. Recycle the used oil according to local codes.
10. Fill the crankcase to the Full line on the dipstick with fresh oil. Refer to the Filling the Crankcase with Oil.
11. Wipe up any spilled oil.

Changing the Oil Filter

Service Interval: Every 100 hours

Replace the oil filter (Figure 24) after every 100 operating hours or yearly, whichever comes first.

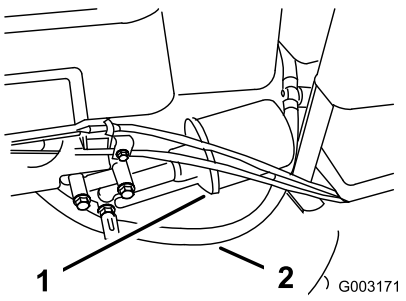

Figure 24

1. Oil filter
2. Fuel line

1. Run the engine to warm the oil.

⚠ WARNING

Oil may be hot after the engine has been run, and contact with hot oil can cause severe personal injury.

Avoid contacting the hot engine oil when you drain it.

2. Stop the engine and wait for all moving parts to stop.
3. Disconnect the wire from the spark plug (Figure 15).
4. Drain the engine oil; refer to Changing the Engine Oil.
5. Place a rag under the oil filter to catch any oil that may leak out as you remove the filter.
6. Remove the oil filter.
7. Use your finger to coat the gasket on the new filter with oil (Figure 25).

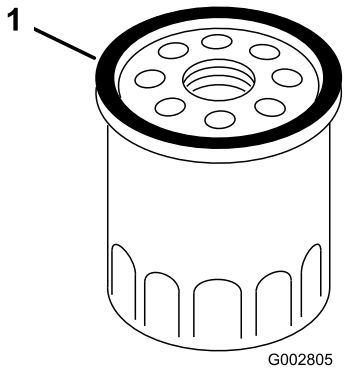

Figure 25

1. Gasket

8. Install the new filter and hand tighten it 2/3 turn only.
9. Fill the crankcase to the Full line on the dipstick with fresh oil Refer to Filling the Crankcase with Oil.
10. Connect the wire to the spark plug.
11. Run the engine for about 3 minutes.
12. Stop the engine, wait for all moving parts to stop, and check for oil leakage around the filter.
13. Add oil to compensate for the oil in the oil filter. Refer to Checking the Engine Oil Level.
14. Recycle the used oil filter according to local codes.

Servicing the Spark Plug

Service Interval: Every 100 hours

Check the spark plug after every 100 operating hours. Use an **NGK BPR5ES** spark plug or equivalent.

1. Stop the engine and wait for all moving parts to stop.
2. Disconnect the wire from the spark plug (Figure 15).
3. Clean around the spark plug.
4. Remove the spark plug from the cylinder head.

   Important: Replace a cracked, fouled, or dirty spark plug. Do not clean the electrodes because grit entering the cylinder can damage the engine.

5. Set the gap on the plug to 0.030 in. (0.76 mm) (Figure 26).

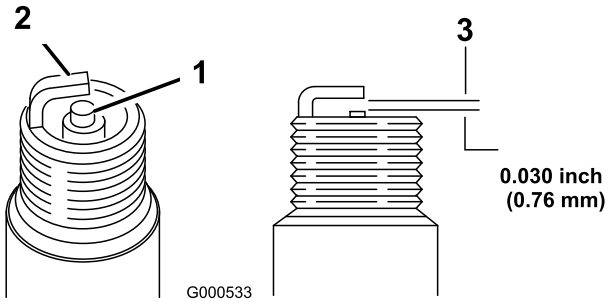

Figure 26

1. Center electrode insulator
2. Side electrode
3. Air gap (not to scale)

6. Install the spark plug and the gasket seal.
7. Torque the plug to 17 ft-lb (23 N·m).
8. Connect the wire to the spark plug.

Fuel System Maintenance

Emptying the Fuel Tank and Cleaning the Fuel Filter

Service Interval: Every 100 hours

Every 50 hours

Yearly or before storage

The fuel filter (screen) element is located inside the fuel tank. Clean the fuel filter element every 100 operating hours.

1. Stop the engine and wait for it to cool down.

   Important: Drain gasoline from a cold engine only.

2. Disconnect the wire from the spark plug (Figure 15).
3. Close the fuel valve (Figure 5).
4. Disconnect the fuel line (Figure 24) by loosening the tube clamp at the carburetor.
5. Open the fuel valve.
6. Drain the gasoline completely from the tank and fuel line into an approved fuel container.
7. Remove the fuel tank from the mower.
8. Close the fuel valve.
9. Pour a small amount of fuel in the fuel tank, move the fuel around in the tank, and pour it out into an approved fuel container.
10. Install the fuel tank and fuel line; refer to Installing the Fuel Tank and the Fuel Line.

Drive System Maintenance

Adjusting the Self-propel Drive

Service Interval: Every 100 hours

If the lawn mower does not self-propel or has a tendency to creep forward when the control bar is more than 1-1/2 inches (3.8 cm) from the handle, adjust the wheel drive control knob on the rear of the gear box.

1. Close the door in the lawn mower housing and remove the grass bag.
2. Rotate the control knob clockwise a half turn if the lawn mower does not self-propel. If the lawn mower creeps forward, rotate the knob a half turn counterclockwise to loosen the belt (Figure 27).

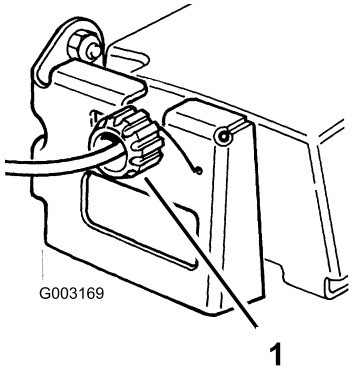

Figure 27

1. Control knob

3. Slowly pull the lawn mower backward while you gradually move the control bar toward the handle.

   Note: The adjustment is correct when the rear wheels stop turning and the control bar is about one inch (2.5 cm) from the handle (Figure 28).

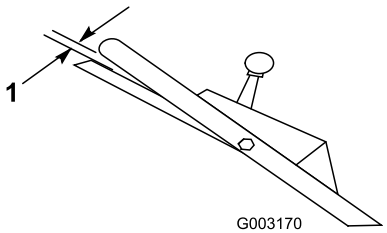

Figure 28

1. 1 inch (2.5 cm)

Controls System Maintenance

Adjusting the Blade Brake Cable

Service Interval: Every 100 hours

Before each use or daily

Whenever you install a new blade brake cable assembly or replace the belt, adjust the blade brake cable.

1. Stop the engine and wait for all moving parts to stop.
2. Disconnect the wire from the spark plug.
3. Check the adjustment of the cable by moving the blade control bar toward the handle until you remove the slack in the cable.

   Note: The gap between the brake lever and the handle must be between 3/16 and 1/4 inch (5 and 6 mm). to adjust the cable.
4. Loosen the nut on the cable bracket (Figure 29).

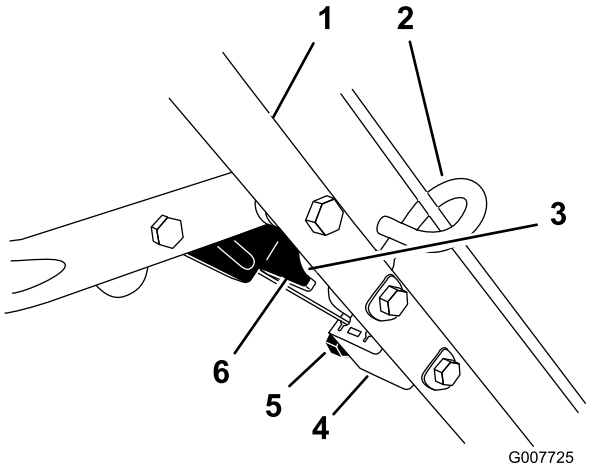

Figure 29

1. Handle
2. Brake lever
3. 3/16 to 1/4 inch (5 to 6 mm)
4. Cable bracket

5. Insert a 3/16 to 1/4 inch (5 to 6 mm) object between the brake lever and the handle (Figure 16).
6. Pull down on the cable conduit until you remove the slack from the wire (Figure 16).
7. Tighten the nut (Figure 16).

Blade Maintenance

Maintaining the Cutting Blade

Always mow with a sharp blade. A sharp blade cuts cleanly and without tearing or shredding the grass blades.

1. Stop the engine and wait for all moving parts to stop.
2. Disconnect the wire from the spark plug.
3. Drain the gasoline from the fuel tank; refer to Emptying the Fuel Tank and Cleaning the Fuel Filter.
4. Tip the mower onto its **right** side (Figure 30).

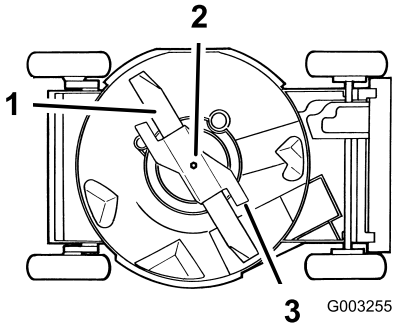

Figure 30

1. Blade
2. Blade bolt and lock washer
3. Accelerator

Inspecting the Blade

Service Interval: Before each use or daily

Carefully examine the blade for sharpness and wear, especially where the flat and the curved parts meet (Figure 31A). Because sand and abrasive material can wear away the metal that connects the flat and curved parts of the blade, check the blade before using the lawn mower. If you notice a slot or wear (Figure 31B and Figure 31C), replace the blade; refer to Removing the Blade.

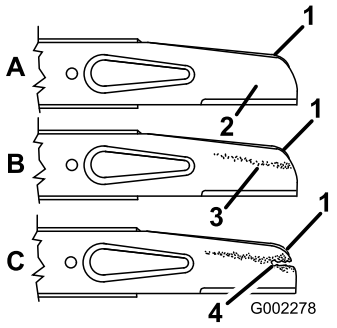

Figure 31

1. Sail
2. Flat part of the blade
3. Wear
4. Slot formed

Note: For the best performance, install a new blade before the cutting season begins. During the year, file down any small nicks to maintain the cutting edge.

⚠ DANGER

A worn or damaged blade can break, and a piece of the blade could be thrown into the operator's or bystander's area, resulting in serious personal injury or death.

- **Inspect the blade periodically for wear or damage.**
- **Replace a worn or damaged blade.**

Removing the Blade

Grasp the end of the blade using a rag or a thickly padded glove. Remove the blade bolt, the lock washer, the accelerator, and the blade (Figure 30).

Sharpening the Blade

File the top side of the blade to maintain its original cutting angle (Figure 32A) and inner cutting edge radius (Figure 32B). The blade will remain balanced if you remove the same amount of material from both cutting edges.

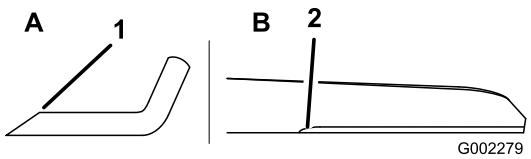

Figure 32

1. Sharpen at this angle only.
2. Maintain the original radius here.

Balancing the Blade

1. Check the balance of the blade by placing the center hole of the blade over a nail or screwdriver shank clamped horizontally in a vise (Figure 33).

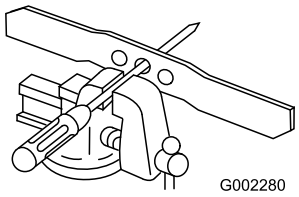

Figure 33

Note: You can also check the balance using a commercially manufactured blade balancer.

2. If either end of the blade rotates downward, file that end (not the cutting edge or the end near the cutting edge). The blade is properly balanced when neither end drops.

Installing the Blade

1. Install a sharp, balanced Toro blade, the accelerator, the lock washer, and the blade bolt. The sail of the blade must point toward the top of the lawn mower housing for proper installation. Torque the blade bolt to 50 ft-lb (68 N·m).

⚠ WARNING

Operating the lawn mower without the accelerator in place can cause the blade to flex, bend, or break, resulting in serious injury or death to the operator or bystanders.

Do not operate the lawn mower without the accelerator.

2. Return the lawn mower to its upright position.
3. Connect the wire to the spark plug.

Cleaning

Cleaning under the Lawn Mower Housing

Service Interval: Every 100 hours

To ensure the best performance, keep the underside of the lawn mower housing clean. Be especially careful to keep the kickers free of debris (Figure 34).

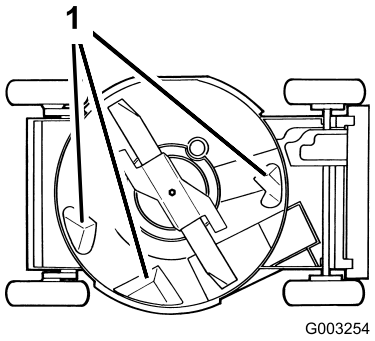

Figure 34

1. Kickers

Washing Method

Service Interval: Before each use or daily

1. Position the lawn mower on a flat concrete or asphalt surface near a garden hose.
2. Start the engine.
3. Hold the running garden hose at handle level and direct the water to flow on the ground just in front of the **right** rear tire (Figure 35).

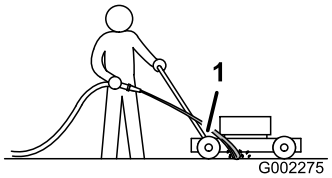

Figure 35

1. Right rear wheel

Note: The blade will draw in water and wash out clippings. Let the water run until you no longer see clippings being washed out from under the housing.

4. Stop the engine and wait for all moving parts to stop.
5. Turn off the water.
6. Start the lawn mower and let it run for a few minutes to dry out the moisture on the lawn mower and its components.

Scraping Method

If washing does not remove all debris from under the lawn mower, scrape it clean.

1. Disconnect the wire from the spark plug (Figure 15).
2. Drain the fuel from the fuel tank. Refer to Emptying the Fuel Tank and Cleaning the Fuel Filter.

⚠ WARNING

Tipping the lawn mower may cause the fuel to leak from the carburetor or the fuel tank. Gasoline is extremely flammable, highly explosive, and, under certain conditions, can cause personal injury or property damage.

Avoid fuel spills by running the engine dry or by removing the gasoline with a hand pump; never siphon.

3. Tip the lawn mower onto its right side .
4. Remove the dirt and grass clippings with a hardwood scraper. Avoid burrs and sharp edges.
5. Turn the lawn mower upright.
6. Fill the fuel tank.
7. Connect the wire to the spark plug.

Cleaning the Discharge Tunnel and Plug

Service Interval: Before each use or daily

Remove the plug from the discharge tunnel and clean it after each use.

Always be sure that the discharge tunnel door closes securely when you release the handle. If the debris prevents the discharge door from closing securely, clean the inside of the discharge tunnel and the door thoroughly.

⚠ WARNING

Grass clippings and other objects can be thrown from an open discharge tunnel and cause serious injury or kill the operator or bystanders.

Never start or operate the lawn mower unless one of the following is true:

- **The discharge tunnel plug is locked securely in the discharge tunnel.**
- **The grass bag is locked in place.**
- **The optional side discharge chute is locked in place.**
- **The discharge tunnel door is locked in place.**

Storage

To prepare the lawn mower for off-season storage, perform the recommended maintenance procedures. Refer to Maintenance.

Store the lawn mower in a cool, clean, dry place. Cover the lawn mower to keep it clean and protected.

Preparing the Fuel System

⚠ WARNING

Gasoline can vaporize if you store it over long periods of time and explode if it comes into contact with an open flame.

- **Do not store gasoline over long periods of time.**
- **Do not store the lawn mower with gasoline in the fuel tank or the carburetor in an enclosure with an open flame. (For example, a furnace or a water heater pilot light.)**
- **Allow the engine to cool before storing it in any enclosure.**

Empty the fuel tank when mowing the last time before storing the lawn mower.

1. Run the lawn mower until the engine stops from running out of fuel.
2. Prime the engine and start it again.
3. Allow the engine to run until it stops. When you can no longer start the engine, it is sufficiently dry.

Preparing the Engine

1. While the engine is still warm, change the oil from the crankcase. Refer to Changing the Engine Oil.
2. Remove the spark plug (Figure 15).
3. Using an oil can, add about one tablespoon of oil to the crankcase through the spark plug hole.
4. Slowly rotate the engine several times, using the starter rope, to distribute the oil.
5. Install the spark plug but do not connect the wire to the spark plug.

General Information

1. Clean the lawn mower housing. Refer to Clean under the Lawn Mower Housing.
2. Clean any dirt and chaff from the cylinder, cylinder head fins, and blower housing.
3. Remove grass clippings, dirt, and grime from the external parts of the engine, the shrouding, and the top of the lawn mower housing.
4. Check the condition of the blade. Refer to Maintaining the Cutting Blade.
5. Clean the blade brake clutch shield; refer to Cleaning the Blade Brake Clutch Shield.
6. Service the air filter; refer to Servicing the Air Filter.
7. Lubricate the pivot arms; refer to Lubricating the Pivot Arms.
8. Tighten all nuts, bolts, and screws.
9. Touch up all rusted or chipped paint surfaces with paint available from an Authorized Service Dealer.

Removing the Lawn Mower from Storage

1. Check and tighten all fasteners.
2. Remove the spark plug and spin the engine rapidly using the starter to blow excess oil from the cylinder.
3. Clean the spark plug or replace it if it is cracked, broken, or if the electrodes are worn.
4. Install the spark plug and torque it to 17 ft-lb (23 N·m).
5. Perform any needed maintenance procedures; refer to Maintenance.
6. Fill the fuel in the fuel tank with fresh gasoline.
7. Check the engine oil level.
8. Connect the wire to the spark plug.

Troubleshooting

Problem	Possible Cause	Corrective Action
Engine does not start	1. The fuel tank is empty or the fuel system contains stale fuel.	1. Drain and/or fill the fuel tank with fresh gasoline. If the problem persists, contact an Authorized Service Dealer.
	2. The throttle lever is not in the Choke position.	2. Move the throttle lever to the Choke position.
	3. The wire is not connected to the spark plug.	3. Connect the wire to the spark plug.
	4. The spark plug is pitted, fouled, or the gap is incorrect.	4. Check the spark plug and adjust the gap if necessary. Replace the spark plug if it is pitted, fouled, or cracked.
Engine starts hard or loses power	1. The fuel tank contains stale fuel.	1. Drain and fill the fuel tank with fresh gasoline.
	2. The fuel cap vent hole is plugged.	2. Clean the fuel cap vent hole or replace the fuel cap.
	3. The air filter element is dirty and is restricting the air flow.	3. Clean the air filter pre-cleaner and/or replace the paper air filter.
	4. The underside of the mower housing contains clippings and debris.	4. Clean under the mower housing.
	5. The spark plug is pitted, fouled, or the gap is incorrect.	5. Check the spark plug and adjust the gap if necessary. Replace the spark plug if it is pitted, fouled, or cracked.
	6. The engine oil level is low or the oil is dirty.	6. Check the engine oil. Change the oil if it is dirty or add oil if it is low
Engine runs rough	1. The wire is not connected to the spark plug.	1. Connect the wire to the spark plug.
	2. The spark plug is pitted, fouled, or the gap is incorrect.	2. Check the spark plug and adjust the gap if necessary. Replace the spark plug if it is pitted, fouled, or cracked.
	3. The throttle lever is not in the Fast position.	3. Move the throttle lever to the Fast position.
	4. The air filter element is dirty and is restricting the air flow.	4. Clean the air filter pre-cleaner and/or replace the paper air filter.
Lawn mower or engine vibrates excessively	1. The blade is bent or is out of balance.	1. Balance the blade. If the blade is bent, replace it.
	2. The blade mounting nuts are loose.	2. Tighten the blade mounting nuts.
	3. The underside of the mower housing contains clippings and debris.	3. Clean under the mower housing.
	4. The engine mounting bolts are loose.	4. Tighten the engine mounting bolts.
Uneven cutting pattern	1. All 4 wheels are not at the same height.	1. Place all 4 wheels at the same height.
	2. The blade is dull.	2. Sharpen and balance the blade.
	3. You are mowing in the same pattern repeatedly.	3. Change the mowing pattern.
	4. The underside of the mower housing contains clippings and debris.	4. Clean under the mower housing.
Discharge chute plugs	1. The throttle lever is not in the Fast position.	1. Move the throttle lever to the Fast position.
	2. The cutting height is too low.	2. Raise the cutting height.
	3. You are mowing too fast.	3. Slow down.
	4. The grass is wet.	4. Allow the grass to dry before mowing.
	5. The underside of the mower housing contains clippings and debris.	5. Clean under the mower housing.
Mower does not self-propel	1. The self-propel drive cable is out of adjustment or is damaged.	1. Adjust the self-propel drive cable. Replace the cable if necessary.

International Distributor List

Distributor:	Country:	Phone Number:
Atlantis Su ve Sulama Sisstemleri Lt	Turkey	90 216 344 86 74
Balama Prima Engineering Equip.	Hong Kong	852 2155 2163
B-Ray Corporation	Korea	82 32 551 2076
Casco Sales Company	Puerto Rico	787 788 8383
Ceres S.A.	Costa Rica	506 239 1138
CSSC Turf Equipment (pvt) Ltd.	Sri Lanka	94 11 2746100
Cyril Johnston & Co.	Northern Ireland	44 2890 813 121
Equiver	Mexico	52 55 539 95444
Femco S.A.	Guatemala	502 442 3277
G.Y.K. Company Ltd.	Japan	81 726 325 861
Geomechaniki of Athens	Greece	30 10 935 0054
Guandong Golden Star	China	86 20 876 51338
Hako Ground and Garden	Sweden	46 35 10 0000
Hako Ground and Garden	Norway	47 22 90 7760
Hayter Limited (U.K.)	United Kingdom	44 1279 723 444
Hydroturf Int. Co Dubai	United Arab Emirates	97 14 347 9479
Hydroturf Egypt LLC	Egypt	202 519 4308
Ibea S.P.A.	Italy	39 0331 853611
Irriamc	Portugal	351 21 238 8260
Irrigation Products Int'l Pvt Ltd.	India	86 22 83960789
Jean Heybroek b.v.	Netherlands	31 30 639 4611
Lely (U.K.) Limited	United Kingdom	44 1480 226 800
Maquiver S.A.	Colombia	57 1 236 4079
Maruyama Mfg. Co. Inc.	Japan	81 3 3252 2285
Metra Kft	Hungary	36 1 326 3880
Mountfield a.s.	Czech Republic	420 255 704 220
Munditol S.A.	Argentina	54 11 4 821 9999
Oslinger Turf Equipment SA	Ecuador	593 4 239 6970
Oy Hako Ground and Garden Ab	Finland	358 987 00733
Parkland Products Ltd.	New Zealand	64 3 34 93760
Prochaska & Cie	Austria	43 1 278 5100
RT Cohen 2004 Ltd.	Israel	972 986 17979
Riversa	Spain	34 9 52 83 7500
Roth Motorgerate GmBh & Co.	Germany	49 7144 2050
Sc Svend Carlsen A/S	Denmark	45 66 109 200
Solvert S.A.S.	France	33 1 30 81 77 00
Spypros Stavrinides Limited	Cyprus	357 22 434131
Surge Systems India Limited	India	91 1 292299901
T-Markt Logistics Ltd.	Hungary	36 26 525 500
Toro Australia	Australia	61 3 9580 7355
Toro Europe BVBA	Belgium	32 14 562 960

The Toro Warranty

Conditions and Products Covered

The Toro® Company and its affiliate, Toro Warranty Company, pursuant to an agreement between them, jointly promise to repair the Toro Product listed below if used for residential purposes* if defective in materials or workmanship.

The following time periods apply from the date of purchase:

Products	Warranty Period
Walk Power Mowers	2 year limited warranty
Rear Engine Riders	2 year limited warranty
Lawn & Garden Tractors	2 year limited warranty
Electric Hand Held Products	2 year limited warranty
Snowthrowers	2 year limited warranty
Consumer Zero Turn	2 year limited warranty

*Original Purchaser means the person who originally purchased the Toro Product

*Residential purposes means use of the product on the same lot as your home. Use at more than one location, or institutional or rental use, is considered commercial use, and the commercial use warranty would apply.

Limited Warranty for Commercial Use

Toro Consumer Products and attachments used for commercial, institutional, or rental use, are warranted against defects in materials or workmanship for the following time periods from the date of original purchase:

Products	Warranty Period
Walk Power Mowers	90 day warranty
Rear Engine Riders	90 day warranty
Lawn & Garden Tractors	90 day warranty
Electric Hand Held Products	90 day warranty
Snowthrowers	90 day warranty
Consumer Zero Turn	45 day warranty

Instructions for Obtaining Warranty Service

If you think that your Toro Product contains a defect in materials or workmanship, follow this procedure:

1. Contact your seller to arrange service of the product. If for any reason it is impossible for you to contact your seller, you may contact any Toro Authorized Distributor to arrange service.
2. Bring the product and your proof of purchase (sales receipt) to the Service Dealer. If for any reason you are dissatisfied with the Service Dealer's analysis or with the assistance provided, contact us at:

   Customer Care Department, Consumer Division
   The Toro Company
   8111 Lyndale Avenue South
   Bloomington, MN 55420-1196
   Manager: Technical Product Support: 001–952–887–8248

   See attached Distributor List

Owner Responsibilities

You must maintain your Toro Product by following the maintenance procedures described in the *Operator's Manual*. Such routine maintenance, whether performed by a dealer or by you, is at your expense.

Items and Conditions Not Covered

This express warranty does not cover the following:

- Cost of regular maintenance service or wear parts, such as rotor blades (paddles), scraper blades, belts, fuel, lubricants, oil changes, spark plugs, cable/linkage or brake adjustments
- Any product or part which has been altered or misused and requires replacement or repair due to accidents or lack of proper maintenance
- Repairs necessary due to failure to use fresh fuel (less than one month old), or failure to properly prepare the unit prior to any period of non-use over one month
- Engine and transmission. These are covered by the appropriate manufacturer's guarantees with separate terms and conditions

All repairs covered by these warranties must be performed by an Authorized Toro Service Dealer using Toro approved replacement parts.

General Conditions

The purchaser is covered by the national laws of each country. The rights to which the purchaser is entitled with the support of these laws are not restricted by this warranty.