FORM NO. 3317—593

TORO®

MODEL NO. 62924—5900001 & UP

PARTS CATALOG

5 H.P. LAWN VACUUM, S.P.

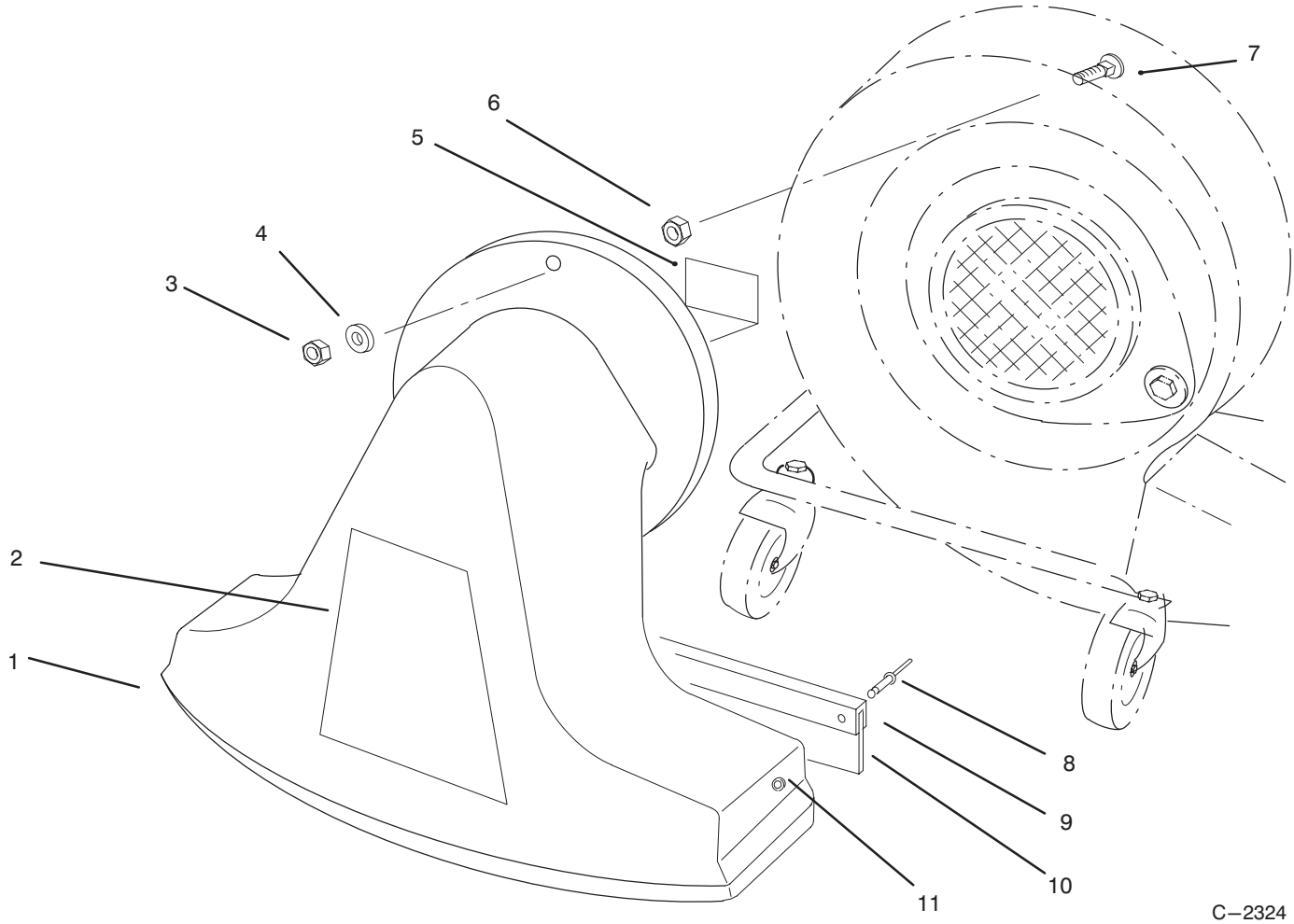

SNOUT ASSEMBLY

Ref. No.	Part No.	Description	No. Used
1	40—7000	Snout Assembly (Incl. Ref.. #7—10)	1
2	67—7720	Decal — Toro Vacuum	1
3	3296—58	Nut — Flange Hd.	1
4	3—3391	Washer	1
5	93—4139	Decal — Caution	1

Ref. No.	Part No.	Description	No. Used
6	32128—26	Nut	1
7	57—3220	Bolt — Carriage	1
8	3290—417	Rivet — Pop	5
9	20—6840	Clamp — Flap	1
10	20—6830	Flap — Rubber	1
11	3256—51	Washer	5

*Not Illustrated

© The TORO Company —1995
All Rights Reserved

TPS

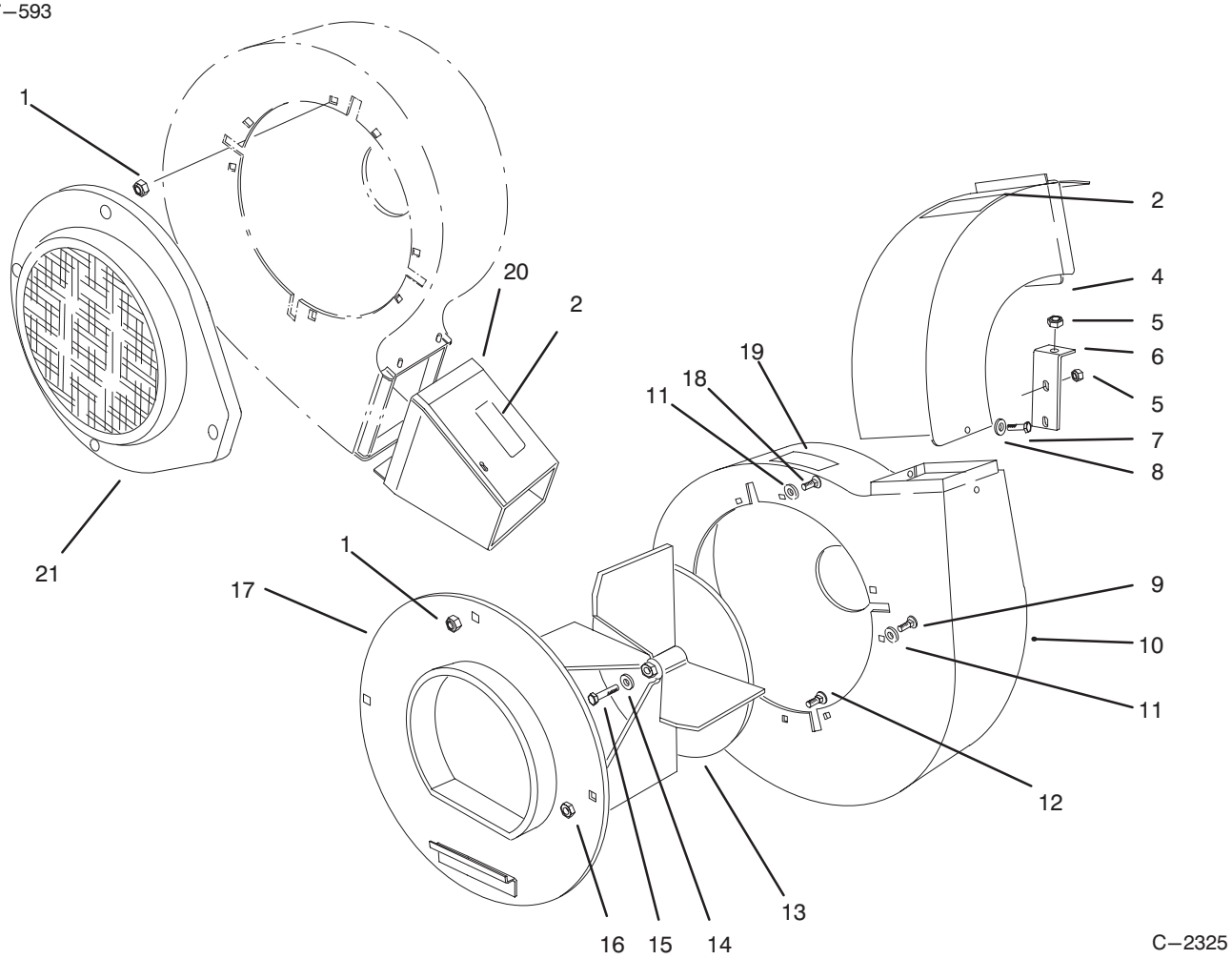

BLOWER ASSEMBLY

Ref. No.	Part No.	Description	No. Used
1	32128–26	Nut – Flange	1
2	93–4139	Decal – Caution	3
4	20–6130	Chute – Vacuum	1
5	3296–58	Nut – Flange Lock	3
6	39–4660	Bracket – Housing	1
7	321–4	Screw	1
8	3290–436	Washer – Lock	1
9	3230–15	Bolt – Carriage	3
10	20–5890	Housing – Blower	1
11	3256–25	Washer – Flat	3

Ref. No.	Part No.	Description	No. Used
12	3230–15	Bolt – Carriage	3
13	93–3677	Fan Assembly	1
14	3290–340	Washer – Lock	1
15	3211–5	Screw	1
16	3296–29	Nut – Lock	3
17	20–5450	Cover – Blower	1
18	57–3220	Bolt – Carriage	1
19	93–4138	Decal – Warning	1
20	93–4124	Blower – Exhaust	1
21	20–5780	Blower – Intake	1

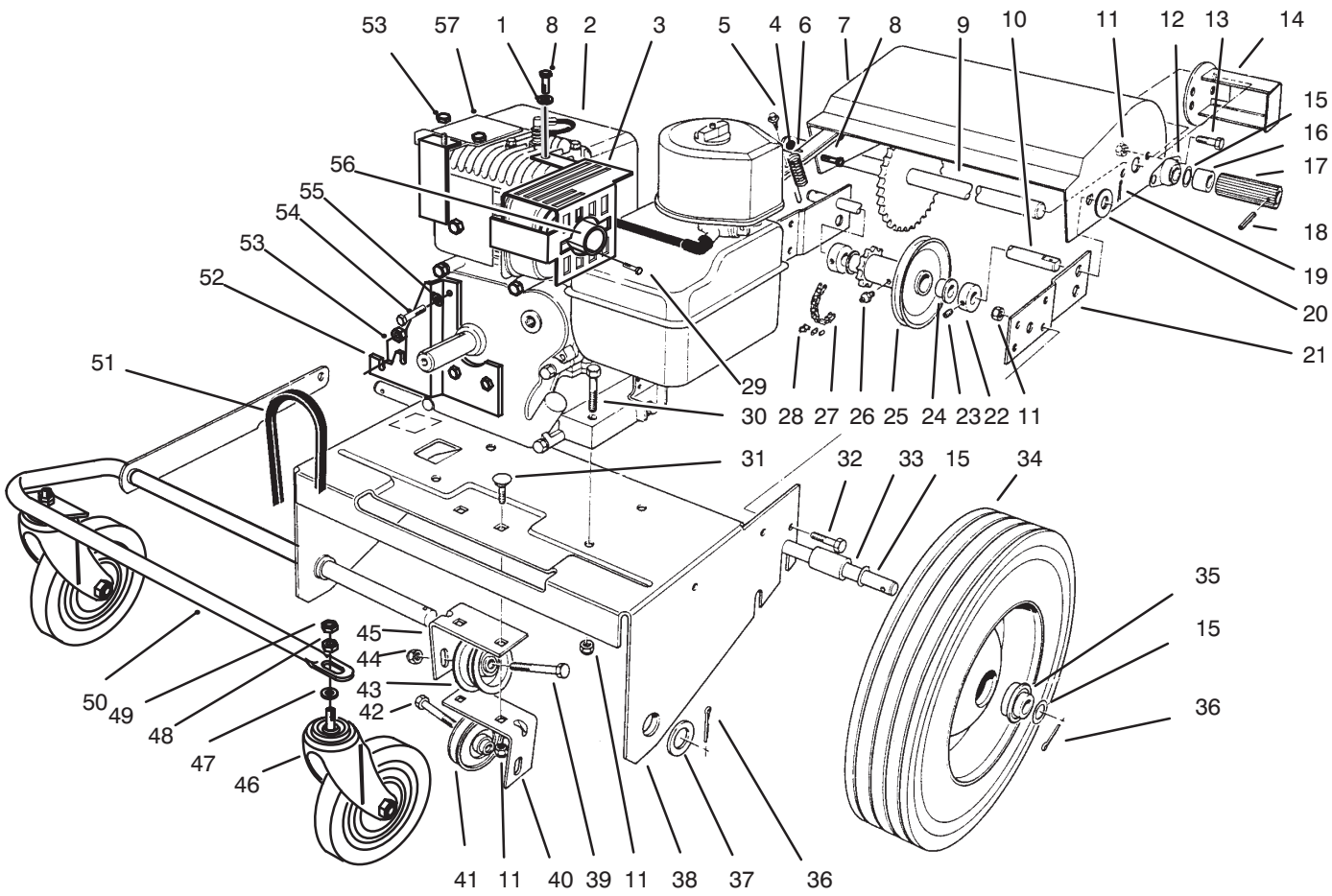

ENGINE & BASE ASSEMBLY

Ref. No.	Part No.	Description	No. Used
1	3290–436	Washer – Belleville	1
2		Engine	1
3	93–7692	Shield – Muffler	1
4	3296–42	Nut	1
5	32140–32	Screw – Self Tapping	1
6	23–3520	Spring	1
7	93–8461	Guard	1
8	321–7	Screw	1
9	20–7270	Shaft – Friction	1
10	20–5870	Shaft	1
11	3296–29	Nut	14
12	256–236	Bearing	2
13	322–2	Screw – Hex. Hd.	4
14	37–9210	Guard	2
15	7–3590	Washer	7
16	20–5460	Spacer	2
17	20–5960	Wheel – Friction	2
18	32121–4	Pin – Roll	2
19	3272–7	Pin – Cotter	2
20	3256–26	Washer	2

Ref. No.	Part No.	Description	No. Used
21	43–6830	Bracket – Mounting	2
22	20–5950	Collar (Incl. Ref.. #23)	2
23	3245–1	Screw – Set	2
24	256–105	Bushing – Flange	2
25	20–6000	Idler Assembly (Incl. Ref.. #24 & 26)	1
26	302–5	Fitting – Grease	1
27	3–3434	Chain (Incl. Ref.. #28)	1
28	2710–31	Link – Connecting	1
29	93–9841	Screw	4
30	322–8	Screw	4
31	3230–16	Bolt – Carriage	2
32	322–5	Screw	6
33	20–5410	Spacer – Axle	2
34	20–6100	Wheel (Incl. Ref.. #35)	2
35	251–258	Bearing	4
36	3272–17	Pin – Cotter	3
37	3256–29	Washer – Flat	1
38	20–5560	Plate – Engine	1
39	323–10	Screw	1

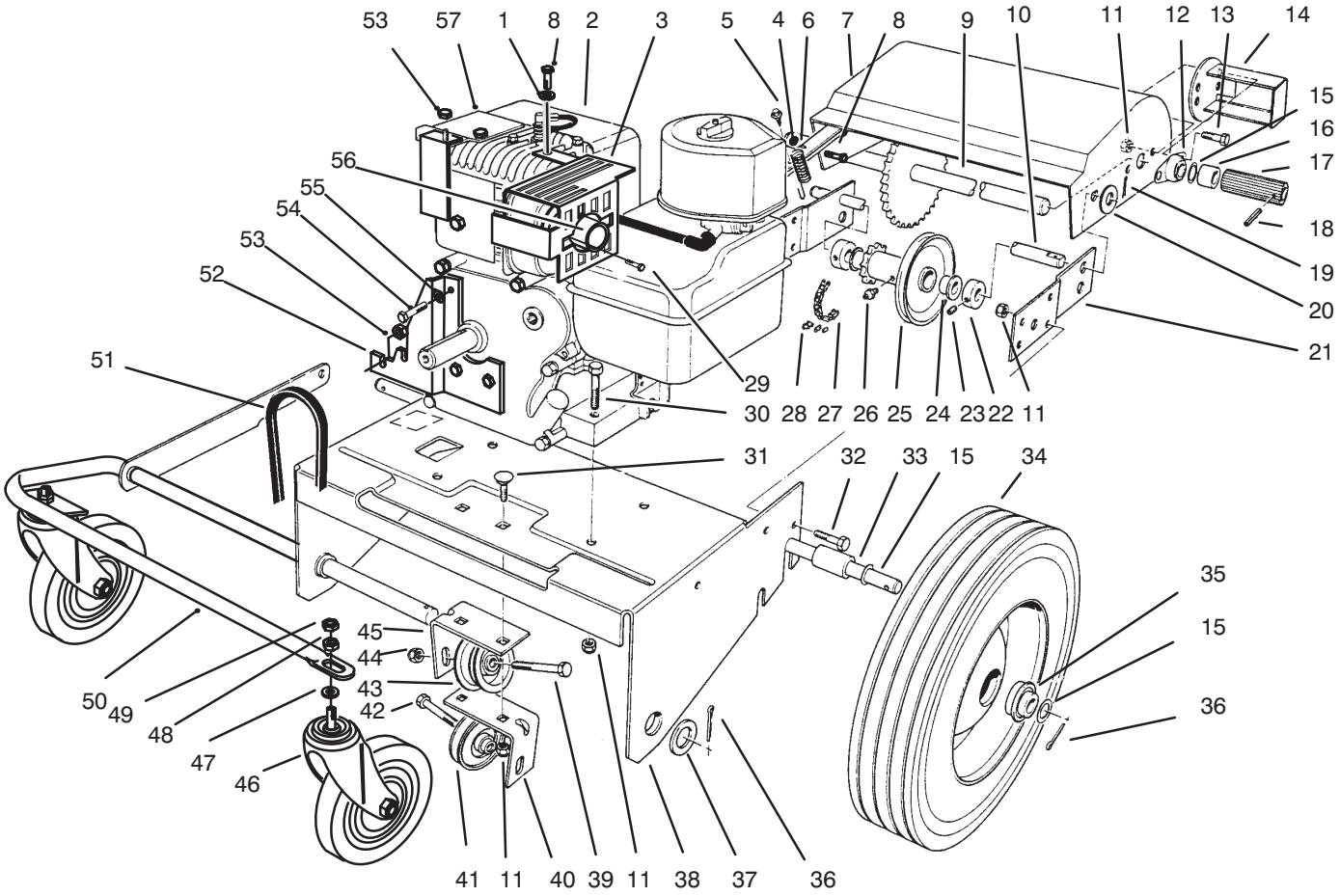

ENGINE & BASE ASSEMBLY

Ref. No.	Part No.	Description	No. Used
40	20–8690	Bracket – Idler Mount L.H.	1
41	12–5820	Pulley – Idler	1
42	323–19	Screw	1
43	12–6700	Pulley – Idler	1
44	3296–39	Nut	2
45	20–8680	Bracket – Idler Mount R.H.	1
46	23–3320	Caster	1
47	3254–4	Washer – Lock	1
48	3217–9	Nut	2
49	3296–23	Nut – Lock	2

Ref. No.	Part No.	Description	No. Used
50	93–4146	Support – Front Wheel	1
51	20–5990	”V”Belt	1
52	93–7414	Guard	1
53	3296–58	Nut	1
54	3210–2	Screw	3
55	3254–4	Washer – Lock	3
56	93–8721	Extension – Exhaust	1
57	39–4680	Bracket – Mounting	1

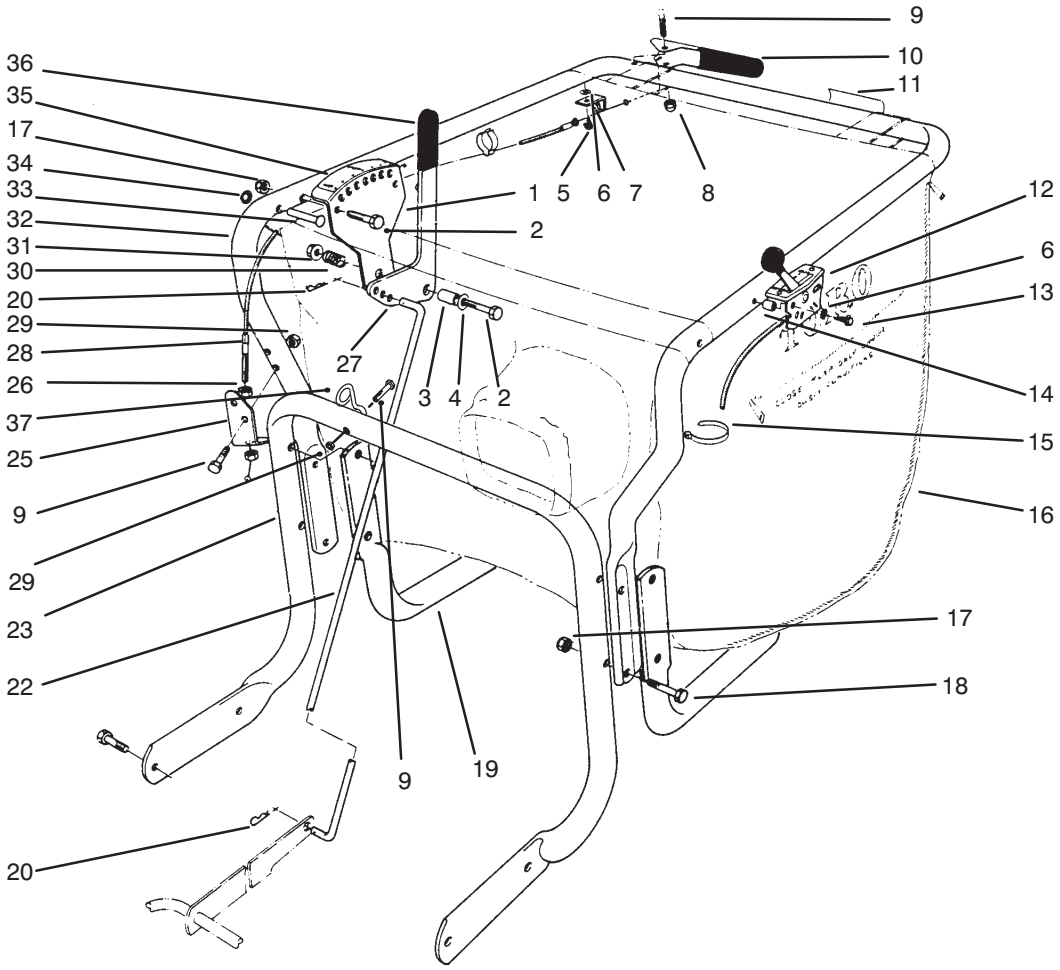

C–2327

CONTROL & HANDLE ASSEMBLY

Ref. No.	Part No.	Description	No. Used
1	20–5820	Bracket – Adjustment	1
2	322–8	Screw	3
3	20–5650	Spacer	1
4	3256–3	Washer – Flat	1
5	32144–112	Screw – Special	1
6	3255–17	Washer – Lock	3
7	20–8780	Ring – Retaining	1
8	32111–7	Nut	1
9	321–10	Screw	2
10	93–8464	Lever	1
11	93–4141	Decal – Traction Control	1
12	23–3610	Throttle Control	1
13	32104–72	Screw – Self Tapping	2
14	23–3620	Spacer	2
15	3290–378	Cable Tie	2
16	71–3540	Bag – Vacuum	1
17	3296–29	Nut – Lock	6
18	322–9	Screw – Hex. Hd.	4

Ref. No.	Part No.	Description	No. Used
19	66–1640	Support – Bag	1
20	3290–250	Pin – Cotter	2
22	33–2410	Rod – Connecting	1
23	93–9331	Handle – Lower	1
25	33–2830	Mount – Bodine	1
26	32149–5	Nut	2
27	23–3410	Handle – Adjustment	1
28	93–8463	Cable – Forward	1
29	3296–42	Nut – Lock	3
30	20–6110	Spring	1
31	32128–13	Nut – Flange	1
32	23–3570	Handle – Upper	1
33	3263–9	Rivet	2
34	3290–418	Nut – Push On	2
35	93–4137	Decal – Adjustment	1
36	3–7877	Grip – Handle	1
37	46–8082	Guide – Rope	1

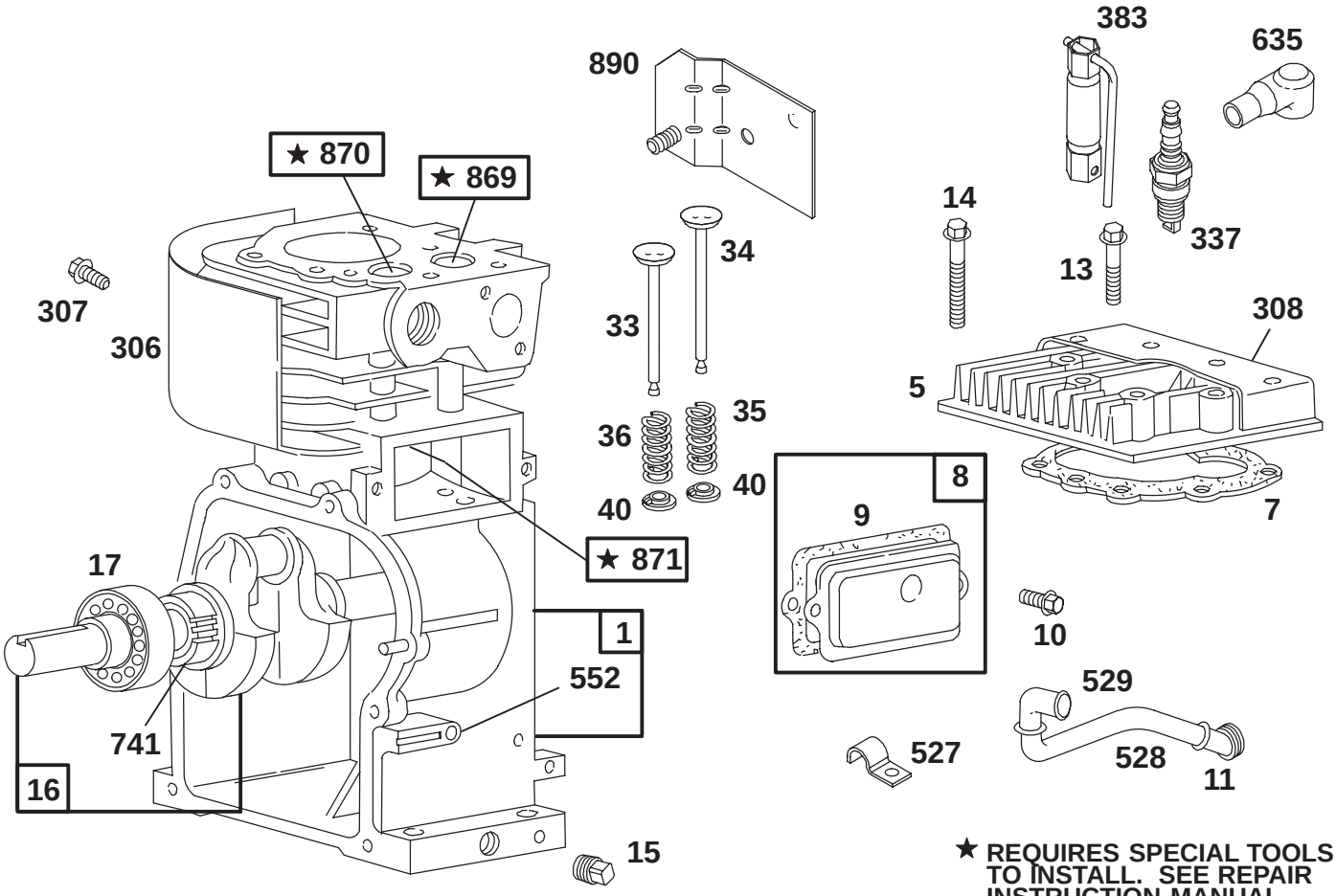

★ REQUIRES SPECIAL TOOLS TO INSTALL. SEE REPAIR INSTRUCTION MANUAL.

Assemblies include all parts shown in frames.

ENGINE BRIGGS & STRATTON MODEL 135202–0263–01

Ref. No.	Part No.	Description	No. Used
1	395990	Cylinder Assembly	
5	214040	Head–Cylinder	
★7	272157	Gasket–Cylinder Head	
8	495774	Breather Assy.	
★9	27549	Gasket–Breather	
10	94621	Screw–Breather Mtg.	
11	66578	Grommet	
13	94221	Screw–Cylinder Head	
14	94679	Screw–Cylinder Head	
15	94387	Plug–Oil Drain	
16	495845	Crankshaft	
17	494874	Bearing–Ball	
33	211119	Valve–Exhaust	
34	261044	Valve–Intake	
35	260552	Spring–Valve (Intake)	
36	26478	Spring–Valve (Ex.)	
40	93312	Retainer–Valve	

Ref. No.	Part No.	Description	No. Used
307	94680	Screw–Hex. Hd.	
306	221511	Shield–Cylinder	
308	224738	Cover–Cylinder Head	
308A	224740	Cover–Cylinder Head	
337	802592	Plug–Spark	
383	89838	Wrench–Spark Plug	
527	223786	Clamp–Tube	
528	231550	Tube–Breather	
529	67838	Grommet	
552	231079	Bushing–Gov. Crank	
635	66538	Elbow–Spark Plug	
741	262992	Gear–Timing	
869	211787	Seat–Int. Valve	
870	211172	Seat–Ex. Valve	
871	262001	Guide–Exhaust Valve	
890	496783	Bracket–Mounting	

★ Included in Gasket Set–Part No. 495603.
● Included in Carburetor Overhaul Kit–Part No. 495606.

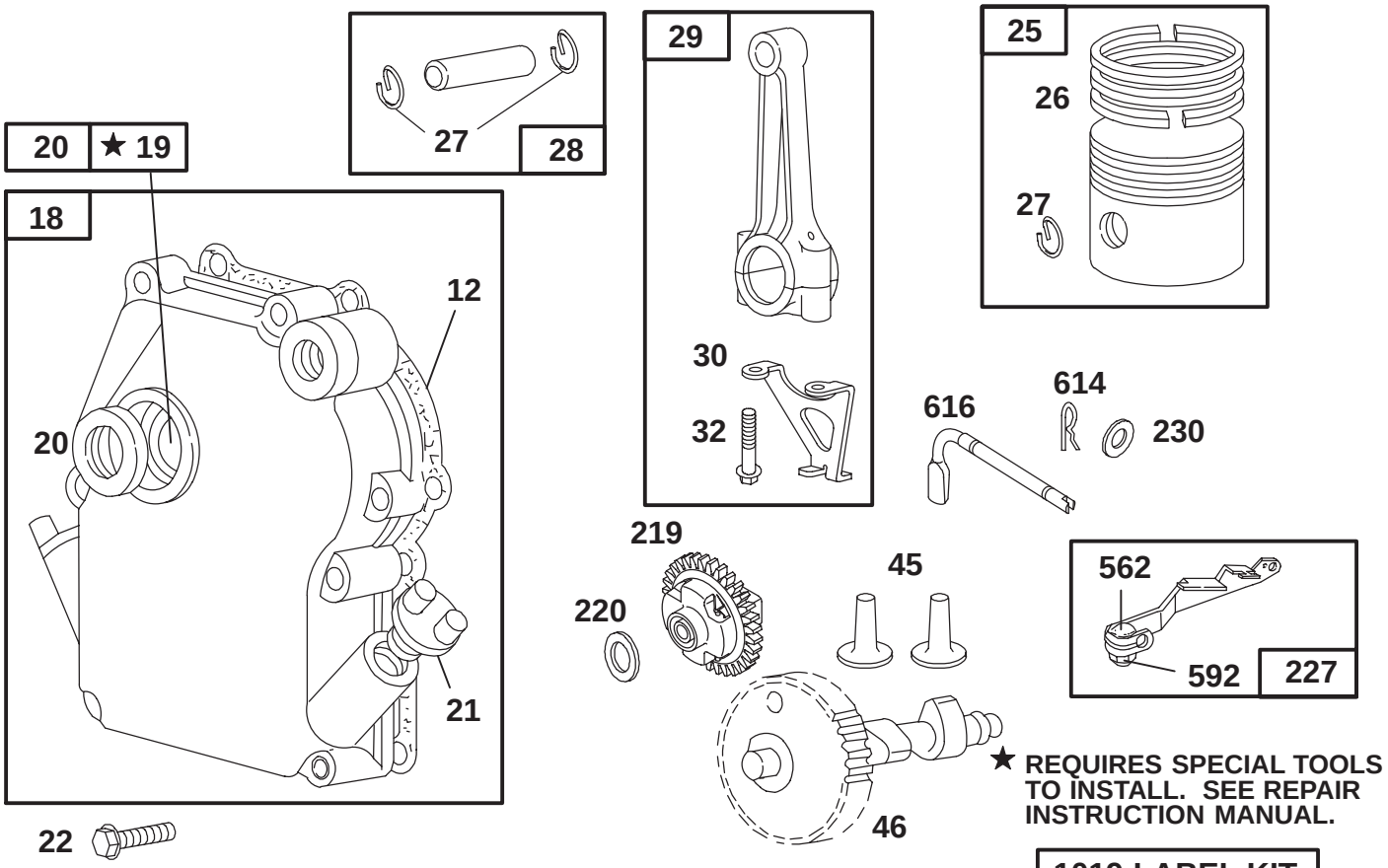

Assemblies include all parts shown in frames.

ENGINE BRIGGS & STRATTON MODEL 135202–0263–01

Ref. No.	Part No.	Description	No. Used
⋆12	270080	Gasket–Crankcase (.015” Thick, Std.)	
⋆	270125	Gasket–Crankcase (.005” Thick)	
⋆	270126	Gasket–Crankcase (.009” Thick)	
18	494044	Cover Assy.–Crkcse.	
19	495660	Bushing–Crankcase Cover	
⋆20	294606	Seal–Oil	
21	66768	Plug–Oil Filler	
22	94682	Screw–Cover Mtg.	
25	298904	Piston Assy. (Std.)	
	298905	Piston Assy. (.010” O.S.)	
	298906	Piston Assy. (.020” O.S.)	
	298907	Piston Assy. (.030” O.S.)	
. 26	298982	Ring Set–Piston Std.	
	298983	Ring Set–Piston (.010” O.S.)	
	298984	Ring Set–Piston (.020” O.S.)	
	298985	Ring Set–Piston (.030” O.S.)	
27	26026	Lock–Piston Pin	
	Note: For	Chrome Ring Set (Std. Size) Order No. 299742	
28	298909	Pin Assy.–Piston (Std.)	
	298908	Pin Assy.–Piston (.005” O.S.)	
29	299430	Rod Assy.–Connecting	
	390985	Rod Conn. (.020” U.S.) Pin Bore	
30	221890	Dipper–Conn. Rod	
32	94745	Screw–Conn. Rod	
45	260642	Tappet–Valve	
46	212733	Gear–Cam	
219	494845	Gear–Governor	
220	221551	Washer–Thrust	
227	490374	Lever Assy.–Governor	
230	222450	Washer–Gov. Lever	
562	92613	Bolt–Governor Lever	
592	231082	Nut–Hex.	
614	93306	Pin–Cotter	
615	93307	Retainer–E-Ring	
616	231077	Crank–Governor	
1019	491102	Label Kit	

⋆ Included in Gasket Set–Part No. 495603.
● Included in Carburetor Overhaul Kit–Part No. 495606.

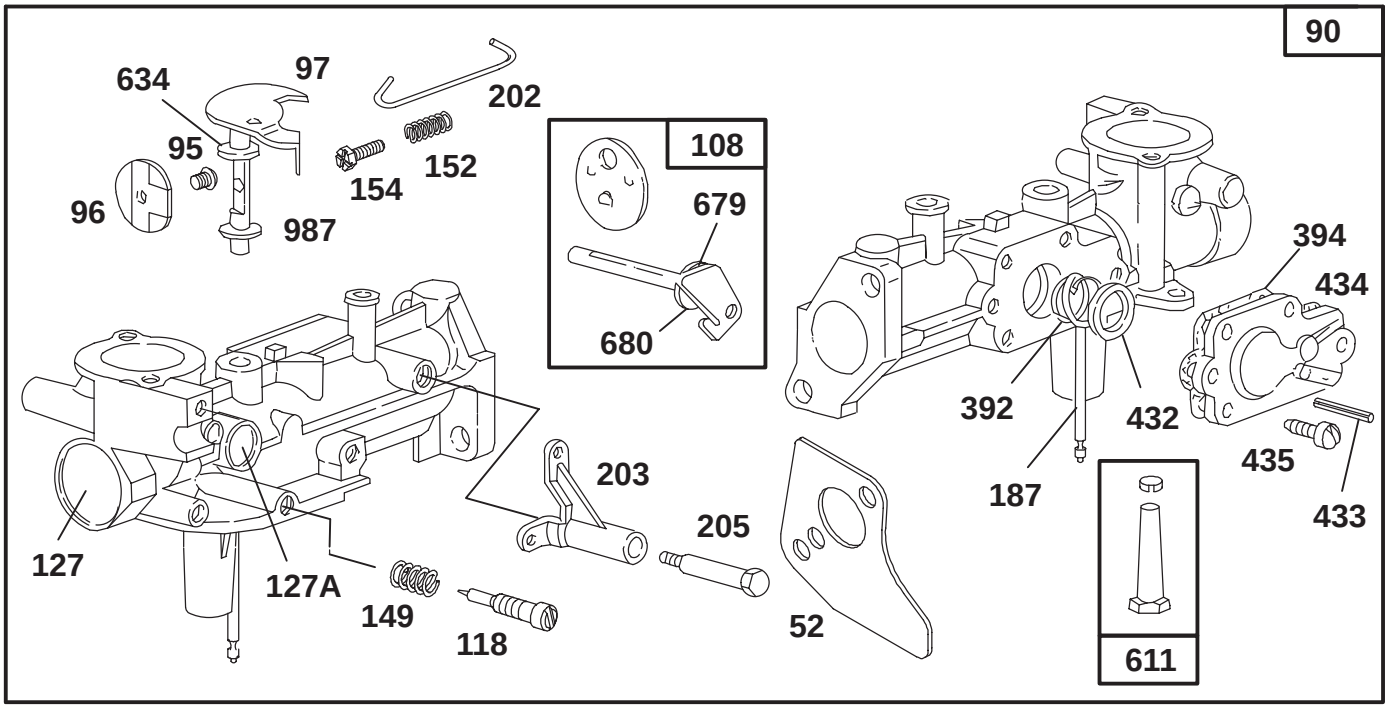

Assemblies include all parts shown in frames.

ENGINE BRIGGS & STRATTON MODEL 135202–0263–01

Ref. No.	Part No.	Description	No. Used
★● 52	272585	Gasket—Carb. Mtg.	
90	495951	Carburetor	
95	93499	Screw—Sem	
96	223793	Valve—Throttle	
97	490048	Shaft—Throttle	
108	495949	Valve—Choke	
●118	231533	Valve—Needle	
124	94616	Screw—Hex. Head	
127	220352	Plug—Welch	
127A	223789	Plug—Welch	
149	26336	Spring—Needle Valve	
152	260575	Spring—Adjustment	
154	93527	Screw—Rd. Hd.	
187	231068	Pipe—Fuel Pick-up	

Ref. No.	Part No.	Description	No. Used
202	262270	Link—Throttle	
203	280720	Crank—Bell	
205	231520	Screw—Shoulder	
392	262328	Spring—Diaphragm	
●394	272538	Diaphragm—Carburetor	
432	221377	Cap—Spring	
433	93265	Pin—Diaphragm Cover	
434	214021	Cover—Diaphragm	
435	93141	Screw—Sem	
611	391813	Tube—Pick-Up	
634	271853	Washer—Throttle Shaft	
679	270382	Washer—Foam	
680	221839	Washer—Brass	
987	398970	Seal—Throttle Shaft	

★ Included in Gasket Set–Part No. 495603.
● Included in Carburetor Overhaul Kit–Part No. 495606.

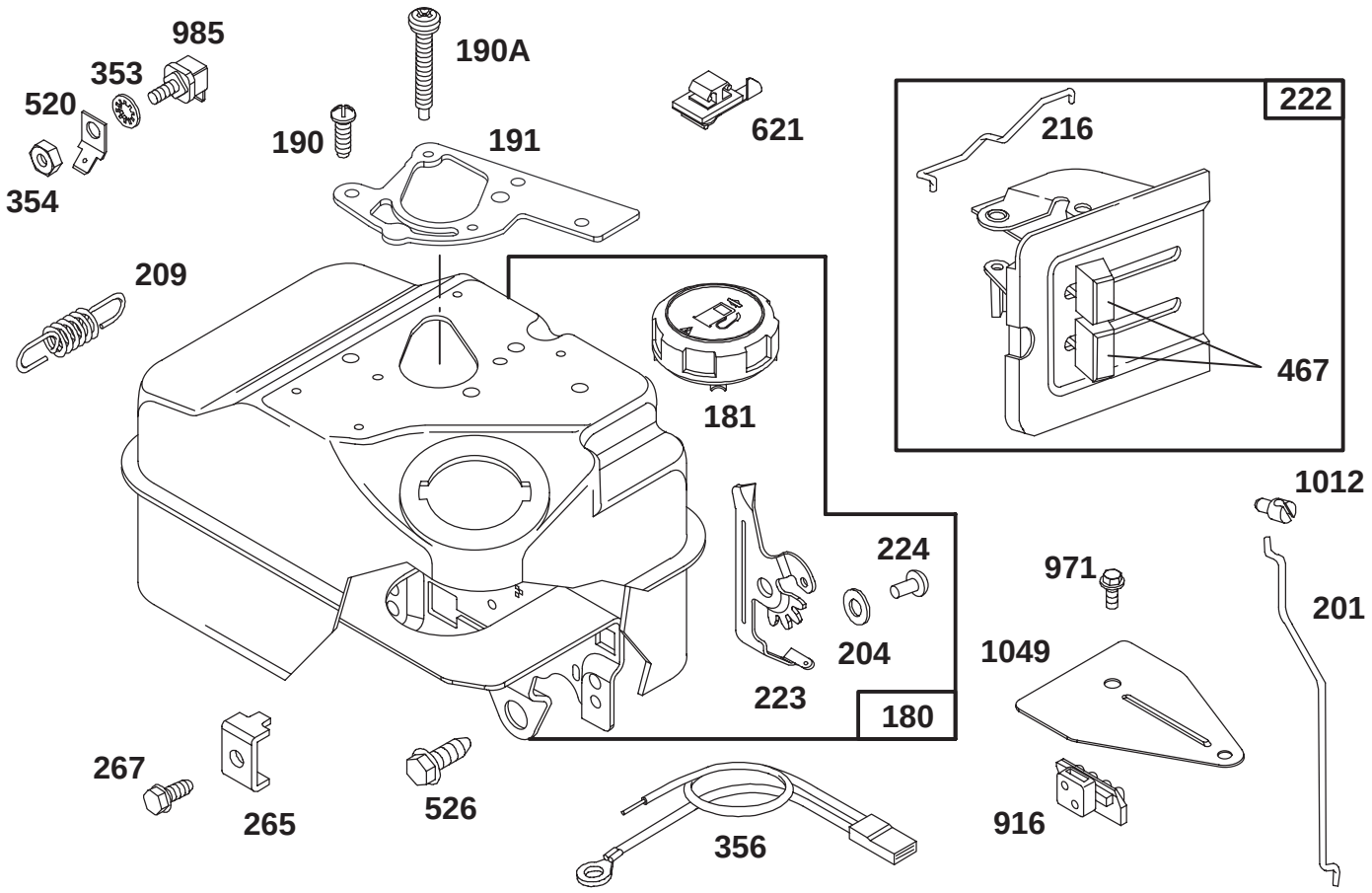

Assemblies include all parts shown in frames.

ENGINE BRIGGS & STRATTON MODEL 135202–0263–01

Ref. No.	Part No.	Description	No. Used
180	495405	Tank–Fuel	
181	494559	Cap–Fuel Tank	
190	94712	Screw–Sem	
190A	94677	Screw–Sem	
★●191	272489	Gasket–Tank Mtg.	
201	262280	Link–Governor	
204	222962	Bushing–Lever	
209	262283	Spring–Governor	
216	262359	Link–Choke	
222	490649	Bracket–Control	
223	223455	Lever–Gov. Control	
224	93491	Rivet–Tubular	
265	221535	Clamp–Casing	
267	93496	Screw–Sem	
353	92791	Washer–Lock	
354	90576	Nut–Hex.	
356	398808	Wire–Ground	
467	280715	Knob	
520	93722	Terminal	
526	94659	Screw–Sem	
621	396847	Switch–Stop	
916	280324	Rack–Gov. Gear	

Ref. No.	Part No.	Description	No. Used
971	93572	Screw	
985	398525	Insulator	
1012	490507	Retainer–Link	
1049	224728	Support–Control	
414	220982	Washer	
414A	221198	Washer	
971	94018	Screw–Hex. Hd.	
995	223814	Bracket–Link	
1012	490507	Retainer–Link	
1049	224728	Support–Control	
224	93491	Rivet–Gov. Control Lever	
265	221535	Clamp–Casing	
267	93496	Screw–Sem	
353	92791	Washer–Lock	
354	90576	Nut–Hex.	
356A	398808	Wire–Ground	
520	93722	Terminal–Spade	
526	94659	Screw–Tank Bracket Mtg.	
621	396847	Switch–Stop	
916	280324	Rack–Gear Control	
985	398525	Insulator Assy.	

★ Included in Gasket Set–Part No. 495603.
● Included in Carburetor Overhaul Kit–Part No. 495606.

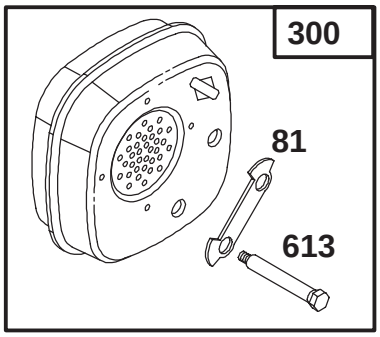

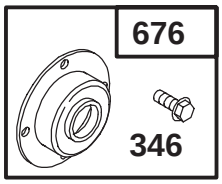

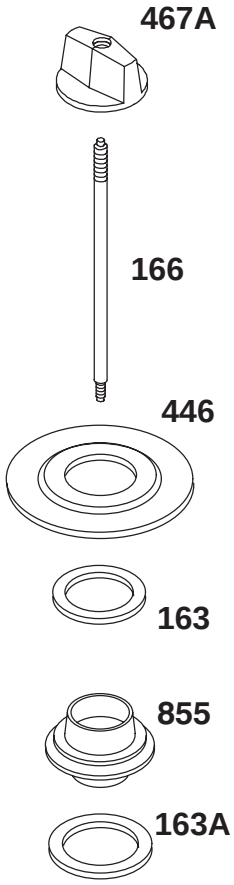

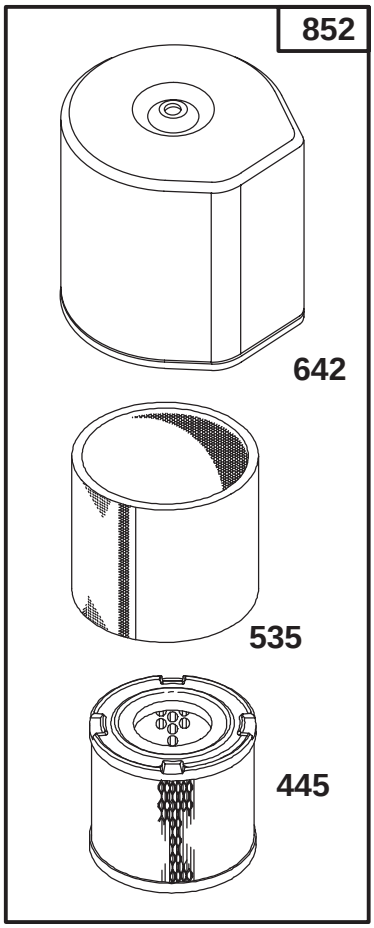

Assemblies include all parts shown in frames.

ENGINE BRIGGS & STRATTON MODEL 135202–0263–01

Ref. No.	Part No.	Description	No. Used
81	222263	Lock—Screw	
★●163	271139	Gasket—Air Cleaner	
★163A	272631	Gasket—Air Cleaner	
166	231819	Stud—Air Cleaner	
300	393615	Muffler—Exhaust	
346	93705	Screw—Sem	
445	396424	Filter—Air	
446	222844	Base—Air Cleaner	

Ref. No.	Part No.	Description	No. Used
467A	493903	Knob	
535	271466	Filter—Air	
613	93935	Screw—Hex. Head	
642	493822	Cover—Air Cleaner	
676	395700	Deflector—Exhaust	
852	396397	Air Cleaner Assembly	
855	281189	Adapter—Air Cleaner	

★ Included in Gasket Set–Part No. 495603.
● Included in Carburetor Overhaul Kit–Part No. 495606.

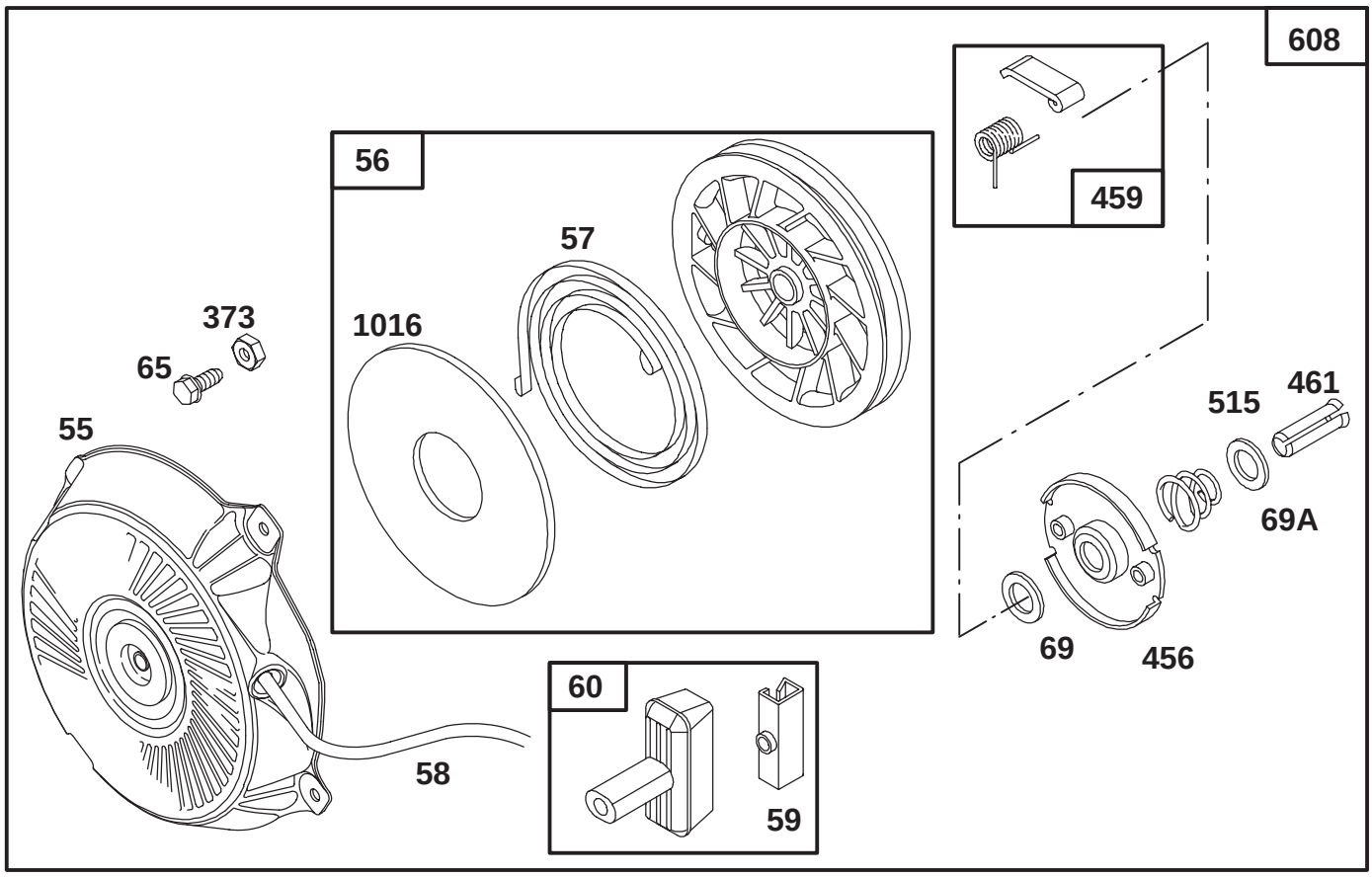

Assemblies include all parts shown in frames.

ENGINE BRIGGS & STRATTON MODEL 135202–0263–01

Ref. No.	Part No.	Description	No. Used
55	494846	Housing–Rewind Starter	
56	493824	Pulley–Starter	
57	262594	Spring–Rewind Starter	
58	280406	Rope–Starter (Cut to Length)	
59	224467	Insert–Starter Handle	
60	494212	Handle–Rewind Starter	
65	94686	Screw–Housing Mtg.	
69	280973	Washer	

Ref. No.	Part No.	Description	No. Used
69A	224322	Washer	
373	92987	Nut–Hex.	
456	224321	Retainer–Spring	
459	492833	Pawl–Ratchet	
461	262626	Pin–Spring	
515	262625	Spring	
608	495766	Starter–Rewind	
1016	224278	Spacer	

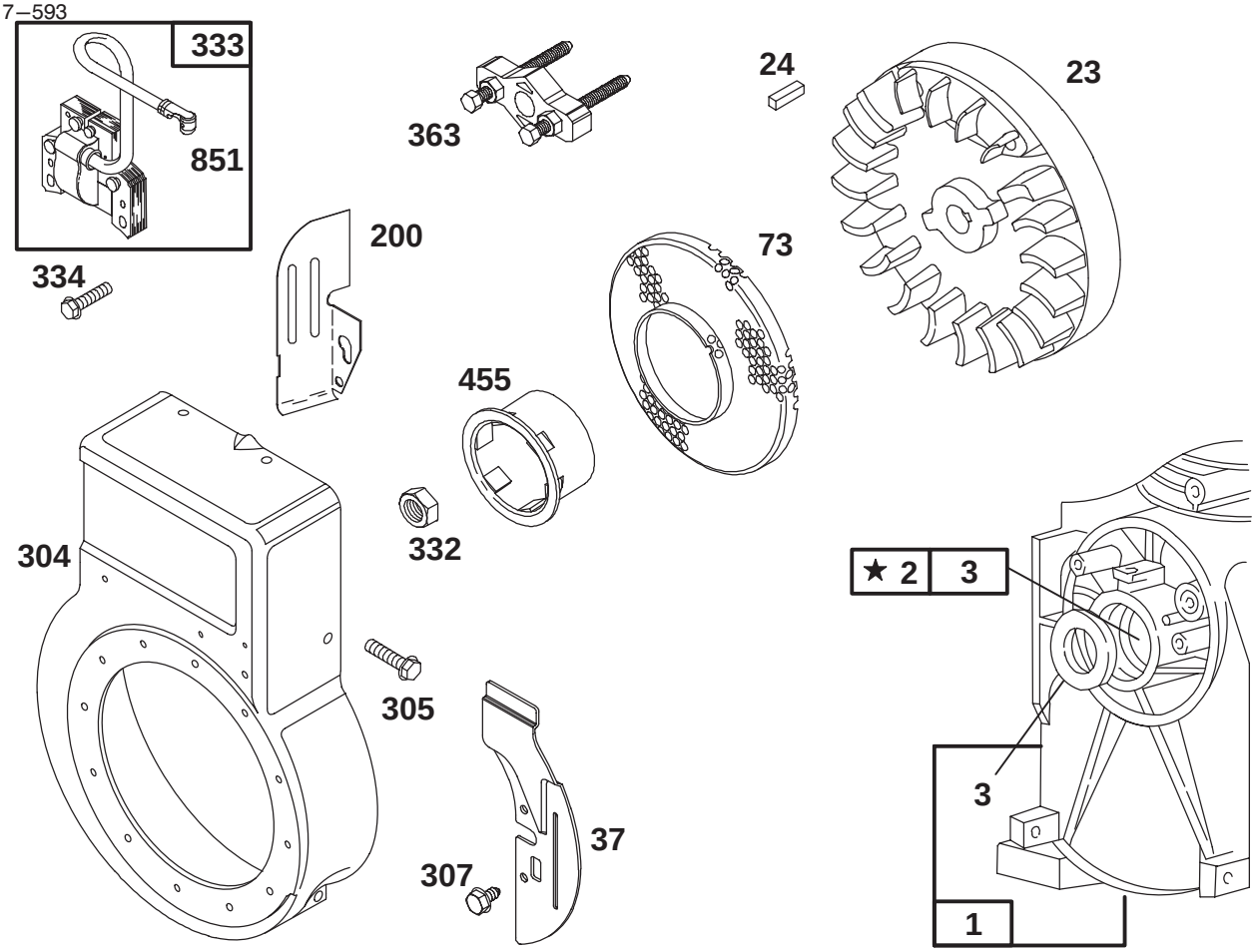

Assemblies include all parts shown in frames.

ENGINE BRIGGS & STRATTON MODEL 135202–0263–01

Ref. No.	Part No.	Description	No. Used
1	395990	Cylinder Assembly	
2	399268	Bushing	
★3	299819	Seal–Oil	
23	297229	Flywheel	
24	222698	Key–Flywheel	
37	222443	Guard–Flywheel	
73	224632	Screen–Rotating	
200	223886	Guide–Air	
304	495759	Housing–Blower	

Ref. No.	Part No.	Description	No. Used
305	94786	Screw–Sem	
307	94680	Screw–Sem	
332	92284	Nut–Flywheel	
333	397358	Armature Group	
334	93414	Screw–Sem	
363	19069	Flywheel Puller	
455	224250	Cup–Flywheel	
851	221798	Terminal–Cable	

★ Included in Gasket Set–Part No. 495603.

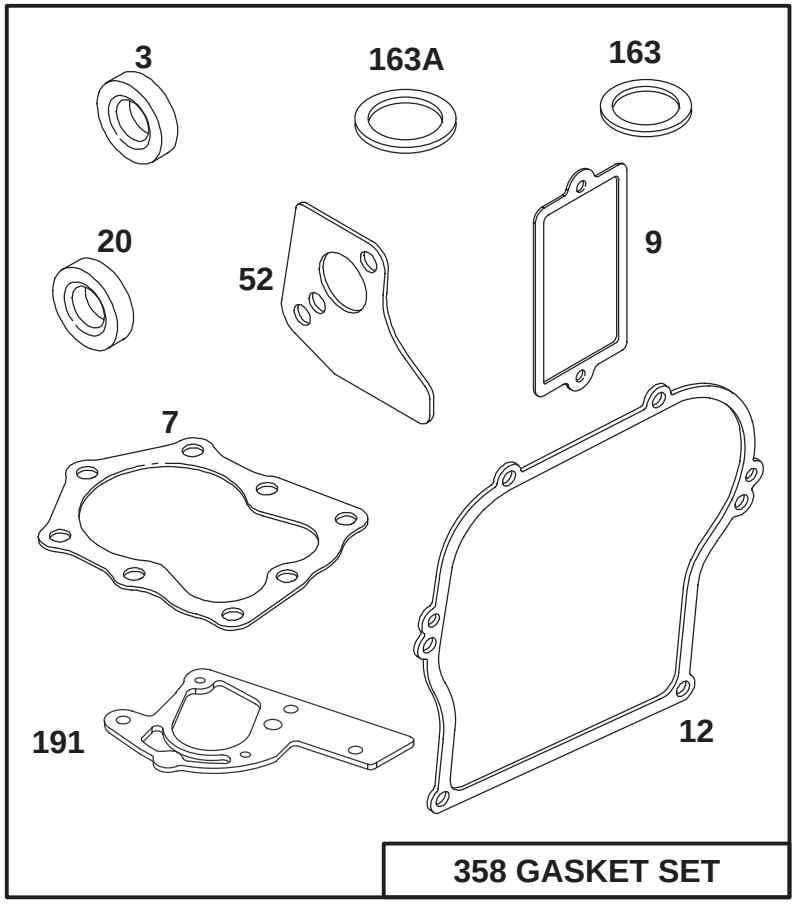

358 GASKET SET

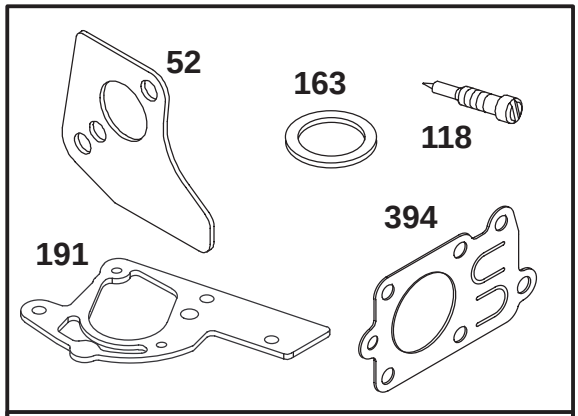

121 CARBURETOR OVERHAUL KIT

Assemblies include all parts shown in frames.

ENGINE BRIGGS & STRATTON MODEL 135202–0263–01

Ref. No.	Part No.	Description	No. Used
★3	299819	Seal–Oil	
★7	272157	Gasket–Cylinder Head	
★9	27549	Gasket–Breather	
★12	270080	Gasket–Crankcase (.015” Thick, Std.)	
★	270125	Gasket–Crankcase (.005” Thick)	
★	270126	Gasket–Crankcase (.009” Thick)	

Ref. No.	Part No.	Description	No. Used
★20	294606	Seal–Oil	
★●52	272585	Gasket–Carburetor Mtg.	
●118	231533	Valve–Needle	
121	495606	Carburetor Overhaul Kit	
★●163	271139	Gasket–Air Cleaner	
★163A	272631	Gasket–Air Cleaner	
★●191	272489	Gasket–Tank	
358	495603	Gasket Set	
●394	272538	Diaphragm–Carburetor	

★ Included in Gasket Set–Part No. 495603.
● Included in Carburetor Overhaul Kit–Part No. 495606.

TORO PART NUMBER INDEX

Part No.	Description	Pg. No.	Ref. No.	Qty.
3–3391	Washer	1	4	1
3–3434	Chain	3	27	1
3–7877	Grip – Handle	5	36	1
7–3590	Washer	3	15	7
12–5820	Pulley – Idler	4	41	1
12–6700	Pulley – Idler	4	43	1
20–5410	Spacer – Axle	3	33	2
20–5450	Cover – Blower	2	17	1
20–5460	Spacer	3	16	2
20–5560	Plate – Engine	3	38	1
20–5650	Spacer	5	3	1
20–5780	Blower – Intake	2	21	1
20–5820	Bracket – Adjustment	5	1	1
20–5870	Shaft	3	10	1
20–5890	Housing – Blower	2	10	1
20–5950	Collar	3	22	2
20–5960	Wheel – Friction	3	17	2
20–5990	VBelt	4	51	1
20–6000	Idler Assembly	3	25	1
20–6100	Wheel	3	34	2
20–6110	Spring	5	30	1
20–6130	Chute – Vacuum	2	4	1
20–6830	Flap – Rubber	1	10	1
20–6840	Clamp – Flap	1	9	1
20–7270	Shaft – Friction	3	9	1
20–8680	Bracket – Idler Mount R.H.	4	45	1
20–8690	Bracket – Idler Mount L.H.	4	40	1
20–8780	Ring – Retaining	5	7	1
23–3320	Caster	4	46	1
23–3410	Handle – Adjustment	5	27	1
23–3520	Spring	3	6	1
23–3570	Handle – Upper	5	32	1
23–3610	Throttle Control	5	12	1
23–3620	Spacer	5	14	2
33–2410	Rod – Connecting	5	22	1
33–2830	Mount – Bodine	5	25	1
37–9210	Guard	3	14	2
39–4660	Bracket – Housing	2	6	1
39–4680	Bracket – Mounting	4	57	1
40–7000	Snout Assembly	1	1	1
43–6830	Bracket – Mounting	3	21	2
46–8082	Guide – Rope	5	37	1
57–3220	Bolt – Carriage	1	7	1
57–3220	Bolt – Carriage	2	18	1
66–1640	Support – Bag	5	19	1
67–7720	Decal – Toro Vacuum	1	2	1
71–3540	Bag – Vacuum	5	16	1
93–3677	Fan Assembly	2	13	1
93–4124	Blower – Exhaust	2	20	1
93–4137	Decal – Adjustment	5	35	1
93–4138	Decal – Warning	2	19	1
93–4139	Decal – Caution	2	2	3
93–4139	Decal – Caution	1	5	1
93–4141	Decal – Traction Control	5	11	1
93–4146	Support – Front Wheel	4	50	1
93–7414	Guard	4	52	1
93–7692	Shield – Muffler	3	3	1
93–8461	Guard	3	7	1
93–8463	Cable – Forward	5	28	1
93–8464	Lever	5	10	1
93–8721	Extension – Exhaust	4	56	1
93–9331	Handle – Lower	5	23	1
93–9841	Screw	3	29	4
251–258	Bearing	3	35	4
256–105	Bushing – Flange	3	24	2
256–236	Bearing	3	12	2
2710–31	Link – Connecting	3	28	1
302–5	Fitting – Grease	3	26	1
321–4	Screw	2	7	1
321–7	Screw	3	8	1
321–10	Screw	5	9	2
322–2	Screw – Hex. Hd.	3	13	4
322–5	Screw	3	32	6
322–8	Screw	5	2	3
322–8	Screw	3	30	4
322–9	Screw – Hex. Hd.	5	18	4
323–10	Screw	3	39	1
323–19	Screw	4	42	1
3210–2	Screw	4	54	3
3211–5	Screw	2	15	1
3217–9	Nut	4	48	2
3230–15	Bolt – Carriage	2	9	3
3230–15	Bolt – Carriage	2	12	3
3230–16	Bolt – Carriage	3	31	2
3245–1	Screw – Set	3	23	2
3254–4	Washer – Lock	4	47	1
3254–4	Washer – Lock	4	55	3
3255–17	Washer – Lock	5	6	3
3256–3	Washer – Flat	5	4	1
3256–25	Washer – Flat	2	11	3
3256–26	Washer	3	20	2
3256–29	Washer – Flat	3	37	1
3256–51	Washer	1	11	5
3263–9	Rivet	5	33	2
3272–7	Pin – Cotter	3	19	2
3272–17	Pin – Cotter	3	36	3
3290–250	Pin – Cotter	5	20	2
3290–340	Washer – Lock	2	14	1
3290–378	Cable Tie	5	15	2
3290–417	Rivet – Pop	1	8	5
3290–418	Nut – Push On	5	34	2
3290–436	Washer – Belleville	3	1	1
3290–436	Washer – Lock	2	8	1
3296–23	Nut – Lock	4	49	2
3296–29	Nut	3	11	14
3296–29	Nut – Lock	2	16	3
3296–29	Nut – Lock	5	17	6
3296–39	Nut	4	44	2
3296–42	Nut	3	4	1
3296–42	Nut – Lock	5	29	3
3296–58	Nut	4	53	1
3296–58	Nut – Flange Hd.	1	3	1
3296–58	Nut – Flange Lock	2	5	3
32104–72	Screw – Self Tapping	5	13	2
32111–7	Nut	5	8	1
32121–4	Pin – Roll	3	18	2
32128–13	Nut – Flange	5	31	1
32128–26	Nut	1	6	1
32128–26	Nut – Flange	2	1	1
32140–32	Screw – Self Tapping	3	5	1
32144–112	Screw – Special	5	5	1
32149–5	Nut	5	26	2

*Not Illustrated

Maintenance Record

Date								

Maintenance Record

Date								