Form No. 3364-348 Rev A

TORO®

Count on it.

Parts Catalog

53cm Heavy-Duty

Recycler®/Rear Bagging Lawn Mower

Model No. 22188TE—Serial No. 310000001 and Up

CE

Register at www.Toro.com.

Original Instructions (EN)

Ordering Replacement Parts

To order replacement parts, please supply the part number, the quantity, and the description of each part desired.

Understanding Reference Numbers

Each identified part in an illustration has a reference number. The reference number for a part also appears in the parts list, along with other information about the part.

This catalog uses two special reference number formats, one to indicate parts in a service assembly and another to indicate the quantity of a given part in an illustration.

Service Assembly Reference Numbers

Parts in service assemblies have reference numbers in the form a:b. The a represents the reference number of the entire service assembly and the b represents a sequential number unique to each part within the service assembly.

For example, a wheel assembly might be identified by reference number 6, the tire by 6:1, the valve by 6:2, and the wheel by 6:3. When you order the assembly identified by reference number 6, you receive all parts identified by reference numbers 6:1,6:2, and 6:3. However, you may also order any part individually. Reference numbers of this type appear in illustration and in parts lists.

Reference Numbers Indicating Quantity

In an illustration, if a reference number indicates more than one part, the reference number has the form nX y. The n represents the quantity of the part, the X is the multiplication symbol, and the y represents the reference number.

For example, in an illustration, the reference number 2X 37 means that two of the parts identified by reference number 37 are indicated.

List of Abbreviations

AR: as required

ASM: assembly

BBC: blade brake clutch

CARR: carriage

CCW: counter clock wise

CW: clockwise

DEG: degrees

ECM: electronic control module

EXT: external

FH: flat head

GA: gauge

HD: heavy-duty

HF: hex flange

HH: hex head

HHF: hex head flange

HHFTF: hex head flange thread forming

HJ: hex jam

HLH: hex lag head

HOC: height-of-cut

HSBH: hex socket button head

HSFH: hex socket flat head

HSH: hex socket head

HWH: hex washer head

HWHTF: hex washer head thread forming

HYD: hydraulic

LH: left hand

NI: nylon insert

NPTF: national pipe thread fine

PFH: phillips flat head

PPH: phillips pan head

PPHTF: phillips pan head thread forming

PRH: phillips round head

PTH: phillips truss head

PTO: power-take-off

RH: right hand

ROPS: roll-over protection system

RRB: rear roller brush

SFH: slotted fillister head

SHH: slotted hex head

SHWH: slotted hex washer head

SPH: slotted pan head

SQH: square head

SRH: slotted round head

STD: standard

TAP: self tapping

TTH: torx truss head

© 2010—The Toro® Company
8111 Lyndale Avenue South
Bloomington, MN 55420

Contact us at www.Toro.com.
Printed in the USA.
All Rights Reserved

Contents

Housing, Chute and Wheel Assembly 4
Housing Assembly No. 98-7146 6
Front Wheel and Tire Assembly No. 100-2870 7
Gear Case Assembly No. 74-1860 8
Engine and Blade Assembly 9
Fuel Tank Assembly 11
Handle Assembly 12
Control Panel Assembly 13
Gearbox and Axle Assembly 14
Rear Wheel Assembly No. 100-2860 15
Grass Bag Assembly No. 106-0975 16

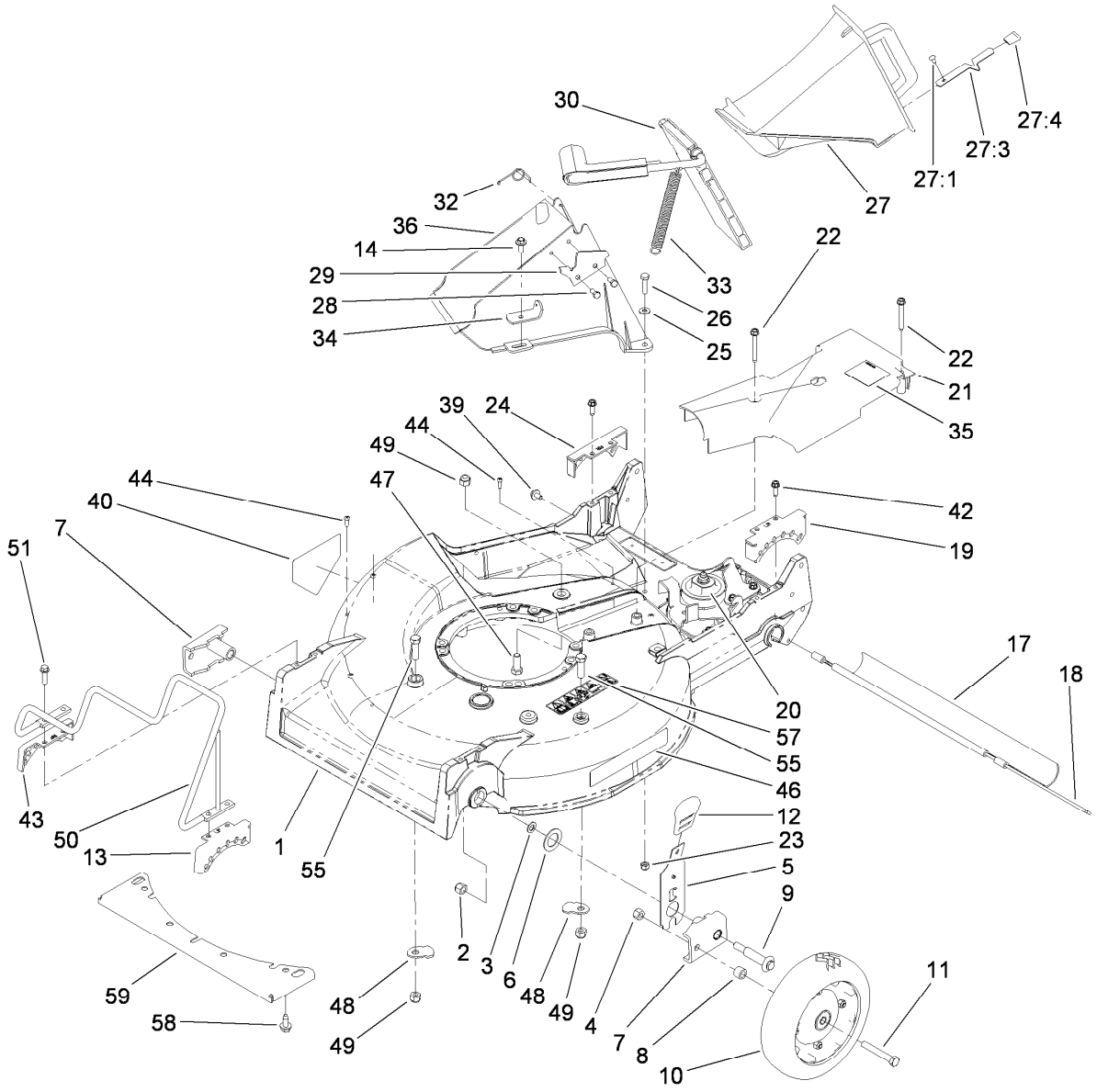

Housing, Chute and Wheel Assembly

Ref.	Part Number	Qty.	Description
1	98-7146	1	Housing
2	3296-6	2	Nut-Lock
3	40-1940	2	Washer
4	32152-2	2	Nut-Lock, Cone
5	119-2323	2	Front Spring Arm ASM
6	257-3	2	Washer-Thrust
7	61-8300	2	Arm-Pivot, Front
8	52-2480	2	Spacer-Wheel
9	114-3468	2	Screw-Shoulder
10	100-2870	2	Wheel And Tire ASM
11	323-12	2	Screw-HH
12	110-0549	2	Knob-HOC
13	49-8760	1	Quadrant-Front, LH
14	46-6811	1	Screw-HWH
17	112-9989	1	Shield-Trailing
18	33-3208	1	Rod-Shield
19	49-8740	1	Quadrant-Rear, LH
20	74-1860	1	Gear Case ASM
21	74-1770	1	Cover-Belt
22	117-5248	2	Screw-HWH, Thrd Form
23	3296-42	2	Nut-Lock, NI

Ref.	Part Number	Qty.	Description
24	49-8750	1	Quadrant-Rear, RH
25	3256-22	2	Washer-Flat
26	321-8	2	Screw-HH
27	77-0502	1	Discharge Plug ASM
27:1	3295-35	1	Rivet-Head, Flat
27:3	76-4640	1	Latch-Plug, Discharge
27:4	76-4650	1	Grip-Latch
28	46-8090	2	Screw-Plastite
29	93-3154	1	Latch-Plate
30	93-7351	1	Discharge Door ASM
32	80-3770	1	Retainer-Door
33	76-4660	1	Spring-Door
34	71-9350	1	Bracket-Spring
35	93-6664	1	Decal-Grease
36	82-9151	1	Tunnel-Discharge
39	46-6810	1	Screw And Washer ASM
40	112-8760	1	Decal-Danger
42	49-2040	4	Screw-HWHTF
43	49-8770	1	Quadrant-Front, RH
44	32144-111	6	Screw-PPH
46	106-0689	1	Decal

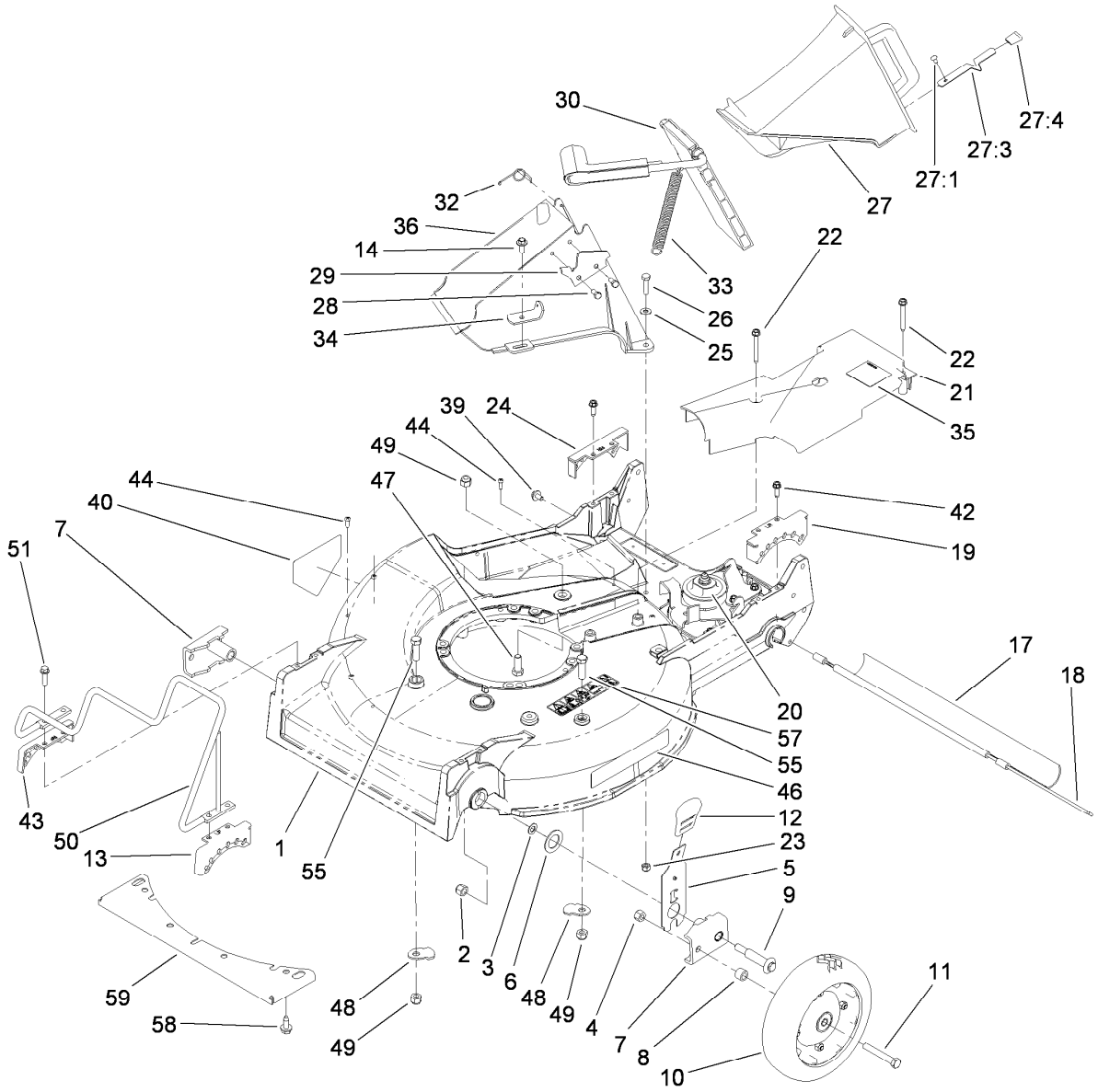

Housing, Chute and Wheel Assembly (continued)

Ref.	Part Number	Qty.	Description
47	323-6	1	Screw-HH
48	84-8930	2	Shield-Retainer
49	3296-39	3	Nut-Lock, NI
50	109-7638	1	Guard-Engine
51	32144-86	4	Screw-HWHTF

Ref.	Part Number	Qty.	Description
55	323-7	2	Screw-HH
57	110-4978	1	Decal-Danger
58	32144-70	4	Screw-HWHTF
59	46-5400-03	1	Shield

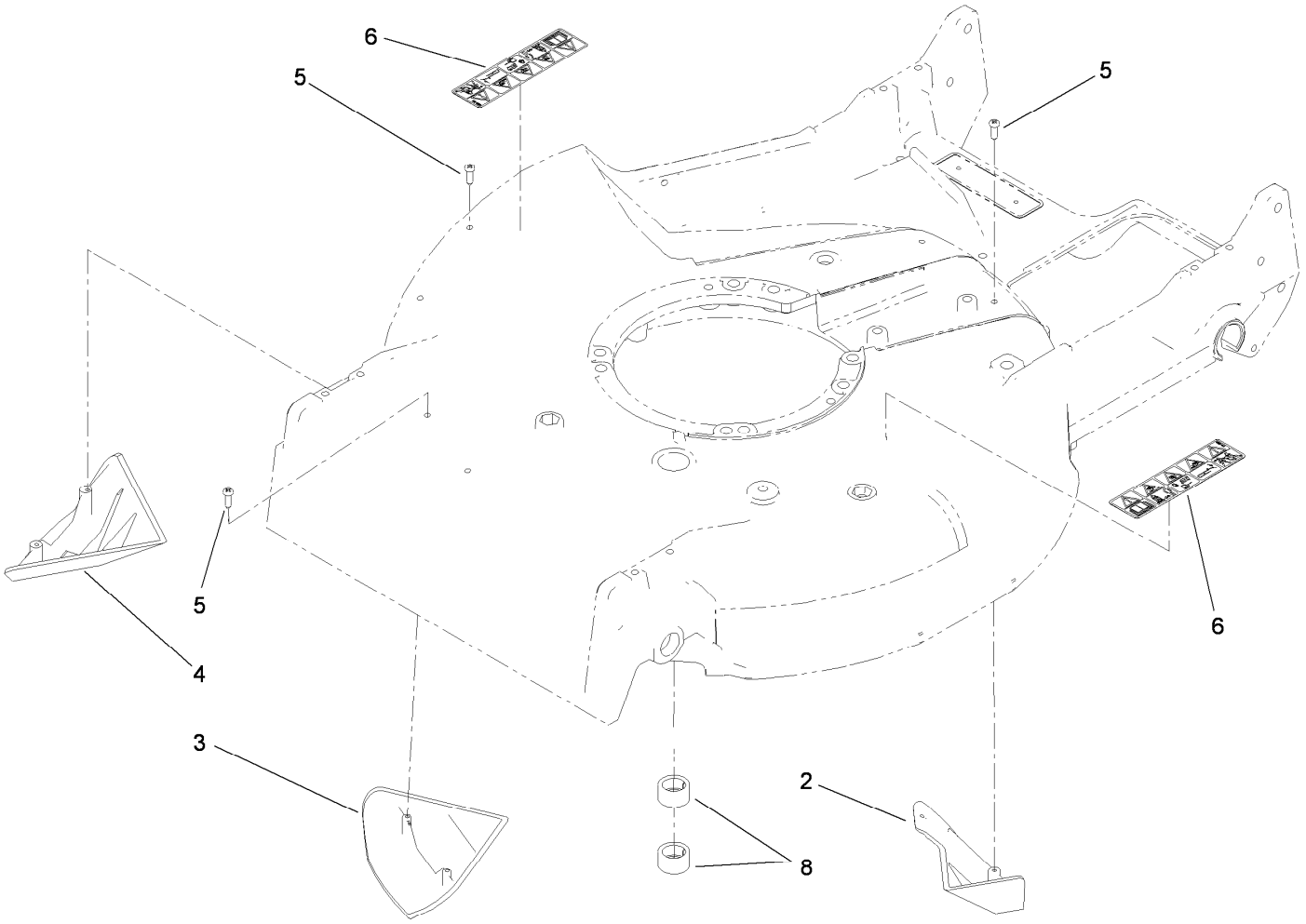

Housing Assembly No. 98-7146

Ref.	*Part Number*	*Qty.*	*Description*
2	92-1750	1	Kicker-Rear
3	92-1720	1	Kicker-Front
4	92-1730	1	Kicker-RH
5	32144-111	6	Screw-PPH
6	110-4978	2	Decal-Danger
8	68-9780	2	Bearing

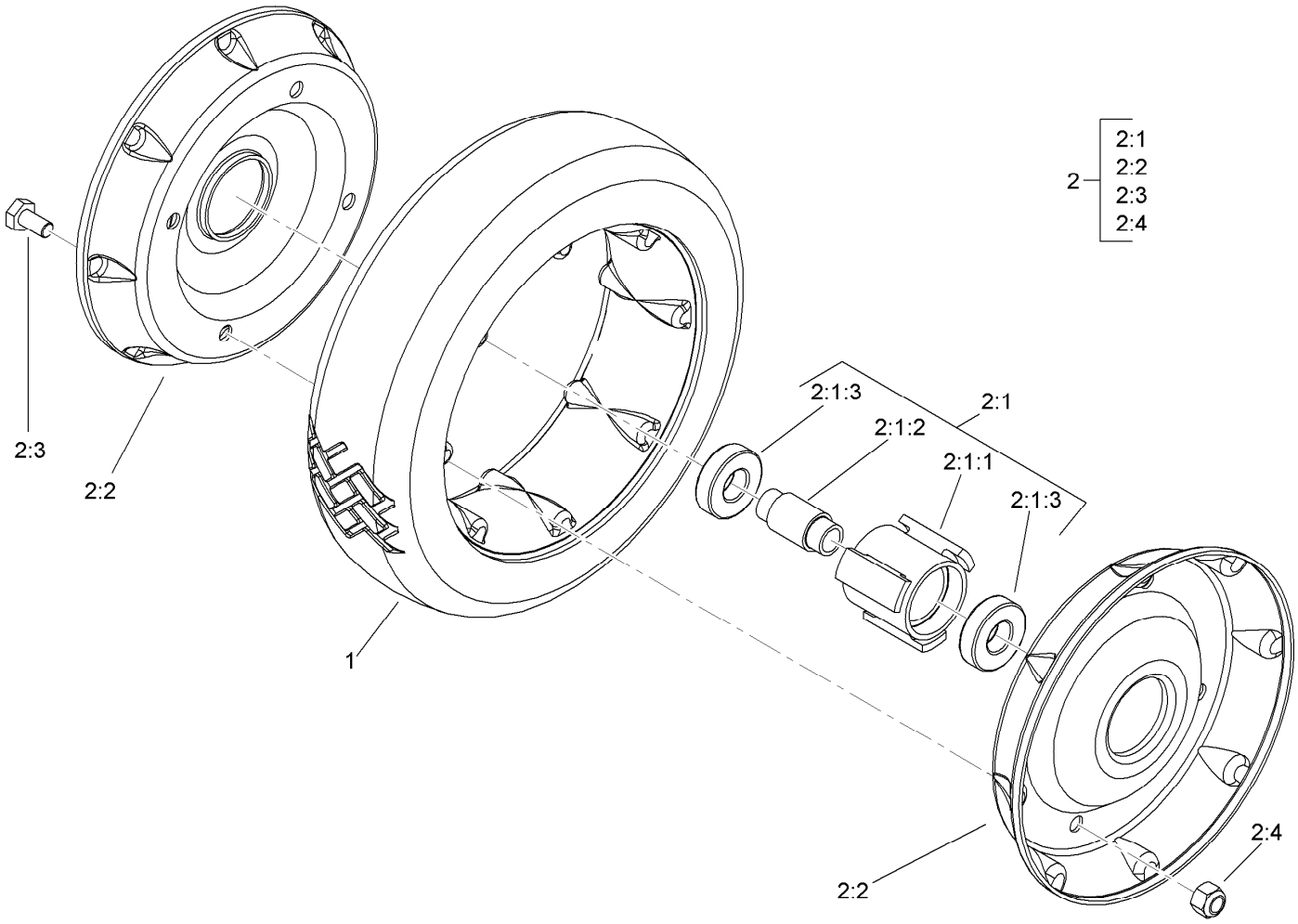

Front Wheel and Tire Assembly No. 100-2870

Ref.	*Part Number*	*Qty.*	*Description*
1	53-7740	1	Tire
2		1	Wheel ASM ●
2:1		1	Hub And Bearing ASM ●
2:1:1	52-2410	1	Hub-Bearing
2:1:2	52-2440	1	Spacer-Bearing
2:1:3	52-2450	2	Bearing-Wheel
2:2	53-7780-06	2	Plate-Wheel, Half
2:3	321-2	4	Screw-HH
2:4	3296-42	4	Nut-Lock, NI

● Not serviced separately

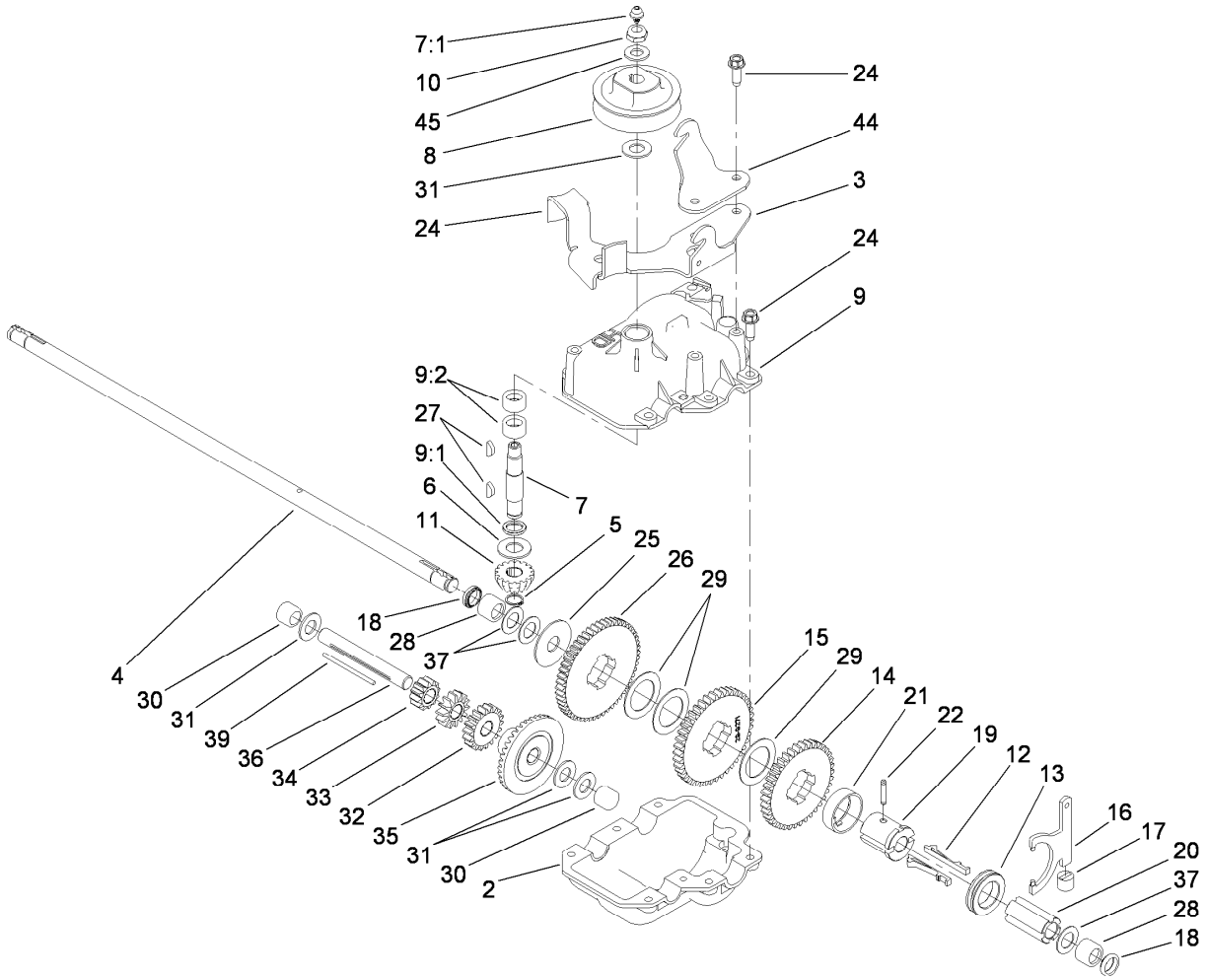

Gear Case Assembly No. 74-1860

Ref.	Part Number	Qty.	Description
2	74-1920	1	Case-Gear, Lower
3	49-8461-03	1	Bracket-Guide, Belt
4	74-1890	1	Shaft-Output
5	32151-57	1	Ring-Retaining
6	47-2910	1	Washer-Thrust
7	13-5149	1	Input Shaft ASM
7:1	302-63	1	Zerk
8	39-6740	1	Pulley
9	13-9739	1	Upper Gearcase ASM
9:1	47-7260	1	Seal
9:2	47-7270	2	Bearing
10	3296-5	1	Nut-Lock
11	39-6660	1	Pinion-Bevel
12	29-9330	2	Key-Shift
13	29-9340	1	Collar-Shift
14	42-4740	1	Gear-38T
15	29-9271	1	Gear-42T
16	60-8870	1	Yoke-Shift
17	29-9570	1	Bushing-Yoke
18	47-6730	2	Seal-Oil
19	55-8010	1	Sleeve-Gear

Ref.	Part Number	Qty.	Description
20	39-6720	1	Sleeve
21	55-8020	1	Retainer-Key
22	3285-19	1	Pin-Groove
24	49-2040	8	Screw-HWHTF
25	29-9690	1	Washer
26	46-3560	1	Gear
27	3257-1	2	Key-Woodruff
28	117-3500	2	Bearing-Caged Needle Roller
29	36-4770	3	Washer
30	252-103	2	Bearing-Closed
31	36-4792	4	Washer-Thrust
32	39-6650	1	Gear-18T
33	46-3550	1	Gear-14T
34	46-3540	1	Gear-12T
35	74-1760	1	Gear-Bevel
36	53-7950	1	Shaft-Intermediate
37	36-4780	3	Washer-Plain
39	39-7842	1	Key
44	74-1750-03	1	Bracket-Engage, Traction
45	3256-45	1	Washer-Flat

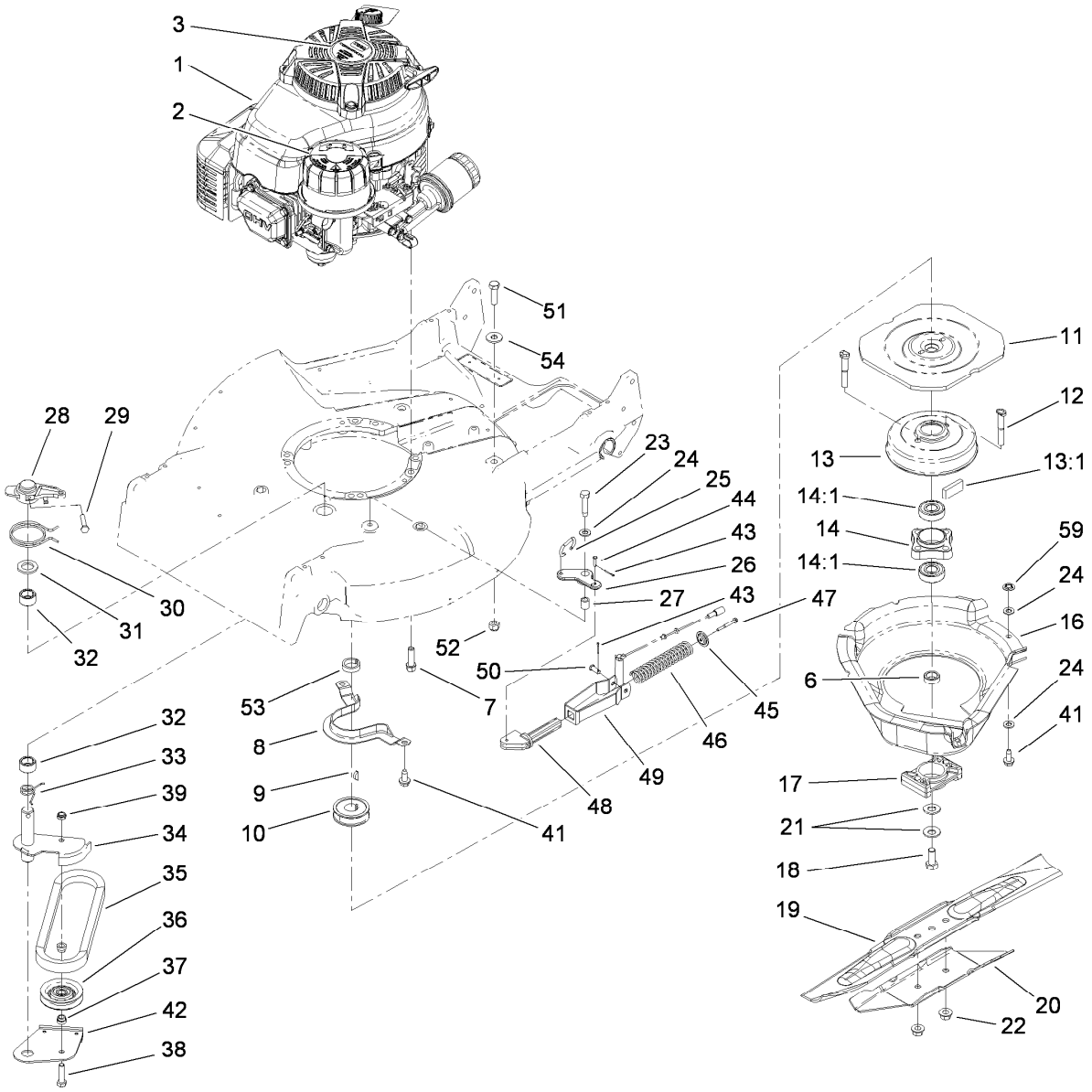

Engine and Blade Assembly

Ref.	Part Number	Qty.	Description
1	117-5220	1	Engine-Kawasaki, Fj180V-Am07-M
2	114-3415	1	Decal-Air Cleaner
3	110-0520	1	Decal
6	107-4058	1	Spacer-Shaft, Output
7	95-1727	4	Screw-Taptite
8	66-0570-03	1	Bracket-Guide, Belt
9	3257-17	1	Key-Woodruff
10	56-6180	1	Pulley-Driver
11	56-6160-03	1	Flywheel-BBC
12	42-3190	2	Bolt-Blade
13	94-9431	1	Brake Drum ASM
13:1	52-3480	2	Dampener-Vibration
14	42-6890	1	Hub ASM
14:1	100-1048	2	Bearing-Ball
16	46-5693	1	Shield
17	107-4275	1	Spacer-Blade
18	3212-4	1	Screw-HH
19	91-2256-03	1	Blade-21 Inch
20	91-2255-03	1	Stiffener-Blade
21	1-603610	2	Washer-Spring

Ref.	Part Number	Qty.	Description
22	54-9190	2	Nut-Lock
23	32104-107	1	Screw-HH
24	3256-23	3	Washer-Flat
25	49-2810	1	Link-Control
26	49-7960	1	Bellcrank
27	49-7950	1	Sleeve-Bellcrank
28	49-2820	1	Lever
29	32104-96	1	Screw-HH
30	49-7970	1	Spring-Torsion
31	70-1160	1	Washer
32	68-9780	2	Bearing
33	85-6880	1	Spring-Torsion
34	84-9130	1	Arm-Idler
35	42-0884	1	V-Belt
36	117-5299	1	Pulley-Idler
37	46-5631	2	Spacer-Pulley, Idler
38	322-6	1	Screw-HH
39	3296-47	1	Nut-Lock, NI
41	32144-70	3	Screw-HWHTF
42	84-9180	1	Brake Plate ASM
43	3272-1	2	Pin-Cotter

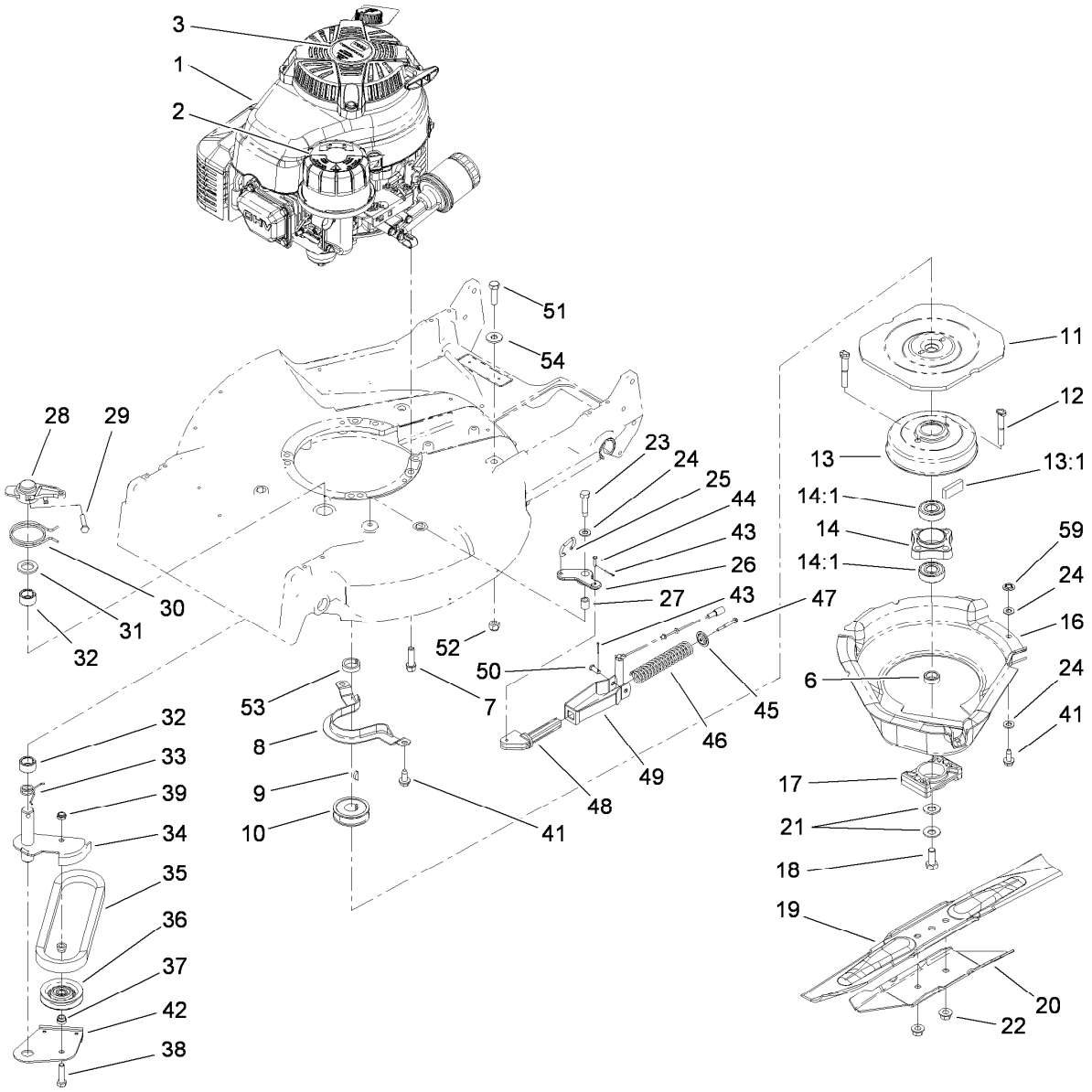

Engine and Blade Assembly (continued)

Ref.	Part Number	Qty.	Description
44	84-9050	1	Pin-Spring
45	65-5280	1	Retainer-Spring
46	84-9100	1	Spring
47	46-7040	1	Screw-HWHTF
48	106-0842	1	Guide-Spring
49	107-4087-03	1	Bracket-Spring

Ref.	Part Number	Qty.	Description
50	84-9040	1	Pin-Cable
51	323-7	1	Screw-HH
52	3296-39	1	Nut-Lock, NI
53	110-2142	1	Spacer-Pulley
54	80-6990	1	Washer-Hardened
59	117-2749	1	Nut-Push

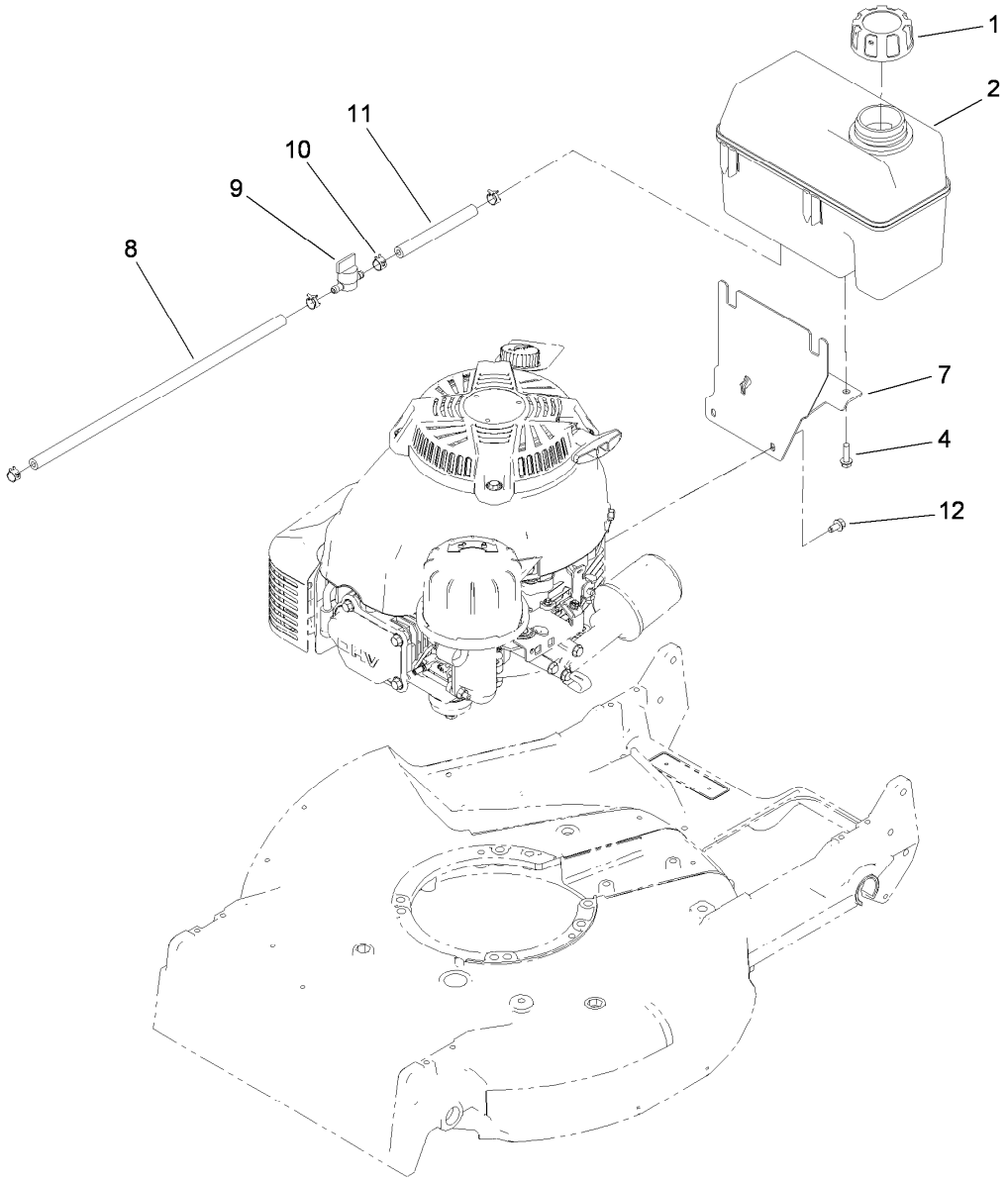

Fuel Tank Assembly

Ref.	*Part Number*	*Qty.*	*Description*
1	93-7198	1	Gas Cap ASM
2	117-3510	1	Fuel Tank ASM
4	46-8091	2	Screw-HWH
7	115-0954-03	1	Tank Mount ASM
8	109-0296	1	Hose-Fuel
9	1-603770	1	Valve-Fuel
10	2412-98	4	Clamp
11	109-0650	1	Hose-Fuel
12	104-2628	3	Screw-HWH

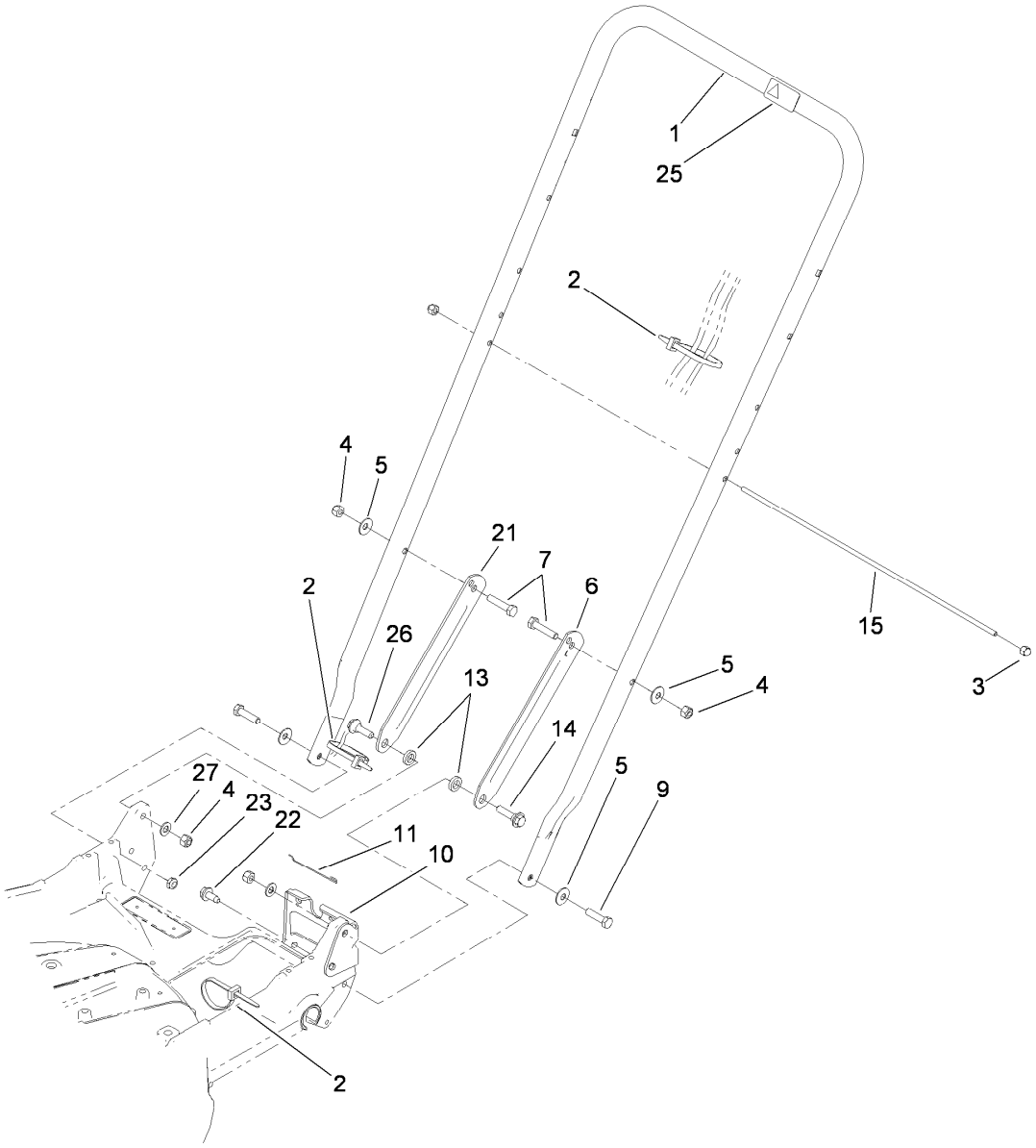

Handle Assembly

Ref.	*Part Number*	*Qty.*	*Description*
1	98-2385-03	1	Handle
2	3290-378	2	Tie-Cable
3	32111-7	2	Nut-Cap
4	3296-29	4	Nut-Lock, NI
5	3290-456	4	Washer-Belleville
6	100-3298-03	1	Latch-Handle, LH
7	322-7	2	Screw-HH
9	322-6	2	Screw-HH
10	74-1741	1	Bracket-Adjustment, Traction

Ref.	*Part Number*	*Qty.*	*Description*
11	46-7030	1	Retainer-Cable
13	3-3287	2	Spacer-Latch, Handle
14	27-7210	1	Screw-Shoulder
15	48-2810	1	Rod-Support, Bag
21	100-3297-03	1	Latch-Handle, RH
22	32144-70	1	Screw-HWHTF
23	3296-47	2	Nut-Lock, NI
25	98-4387	1	Decal-Protection, Ear
26	27-7211	1	Screw-Shoulder
27	3256-23	2	Washer-Flat

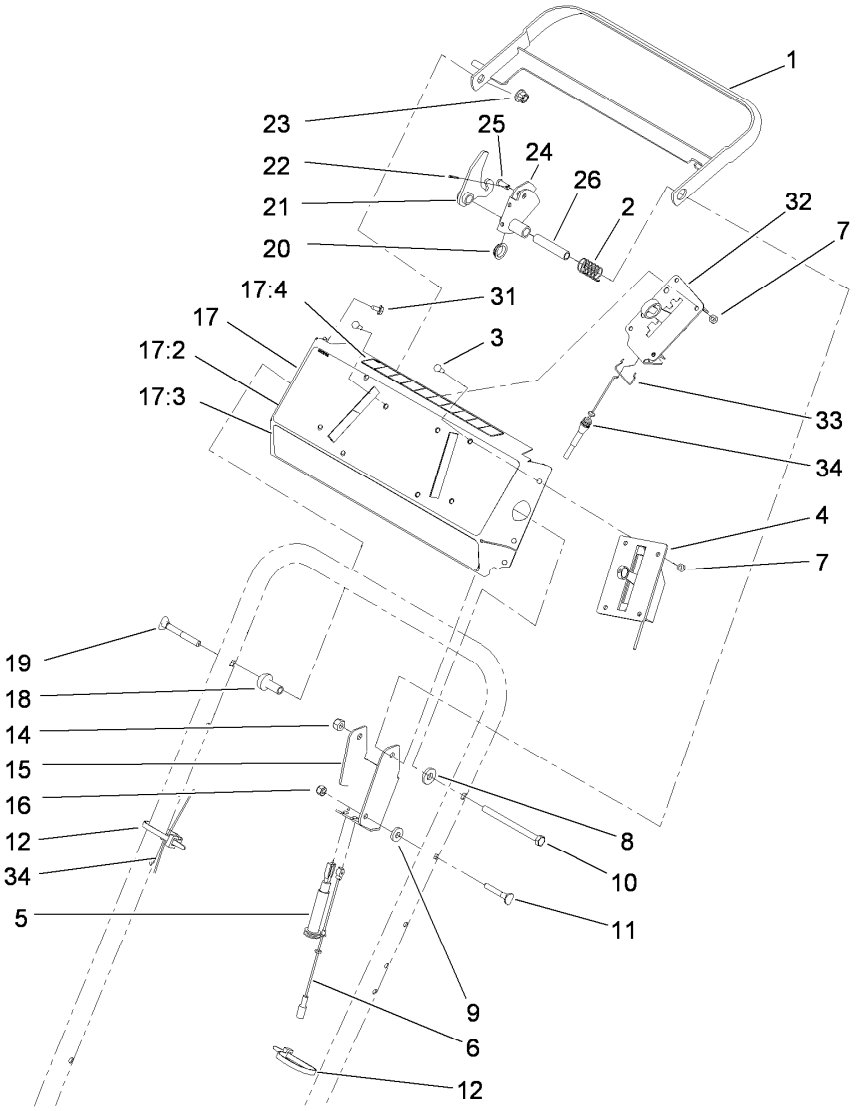

Control Panel Assembly

Ref.	*Part Number*	*Qty.*	*Description*
1	84-8940-03	1	Bar-Control
2	85-6750	1	Spring-Control
3	3250-12	8	Screw-PPH
4	117-3543	1	Control-Throttle
5	84-9120	1	Cable-Traction
6	84-9110	1	Cable-Clutch
7	3296-2	8	Nut-Lock, NI
8	71-9310	1	Spacer
9	71-9320	1	Spacer
10	322-19	1	Screw-HH
11	46-6430	1	Screw-Handle
12	3290-378	2	Tie-Cable
14	3296-29	1	Nut-Lock, NI
15	92-1778-03	1	Bracket-Control
16	3296-42	1	Nut-Lock, NI
17	99-8137	1	Panel ASM

Ref.	*Part Number*	*Qty.*	*Description*
17:2	98-2048	1	Decal-Control Panel
17:3	106-0771	1	Decal-Panel
17:4	93-6655	1	Decal-Panel, Rear
18	49-1631	1	Spacer-Support
19	17-9427	1	Screw
20	86-9320	1	Bushing-Flange
21	84-9000	1	Lever-Traction
22	3272-1	1	Pin-Cotter
23	3296-58	1	Nut-Lock, NI
24	84-8990	1	Lever-BBC
25	84-9040	1	Pin-Cable
26	84-9030	1	Spacer-Bracket, Control
31	32104-76	6	Screw
32	99-2542	1	Control-Shift
33	85-6780	1	Retainer-Cable, Throttle
34	99-2541	1	Cable-Shift

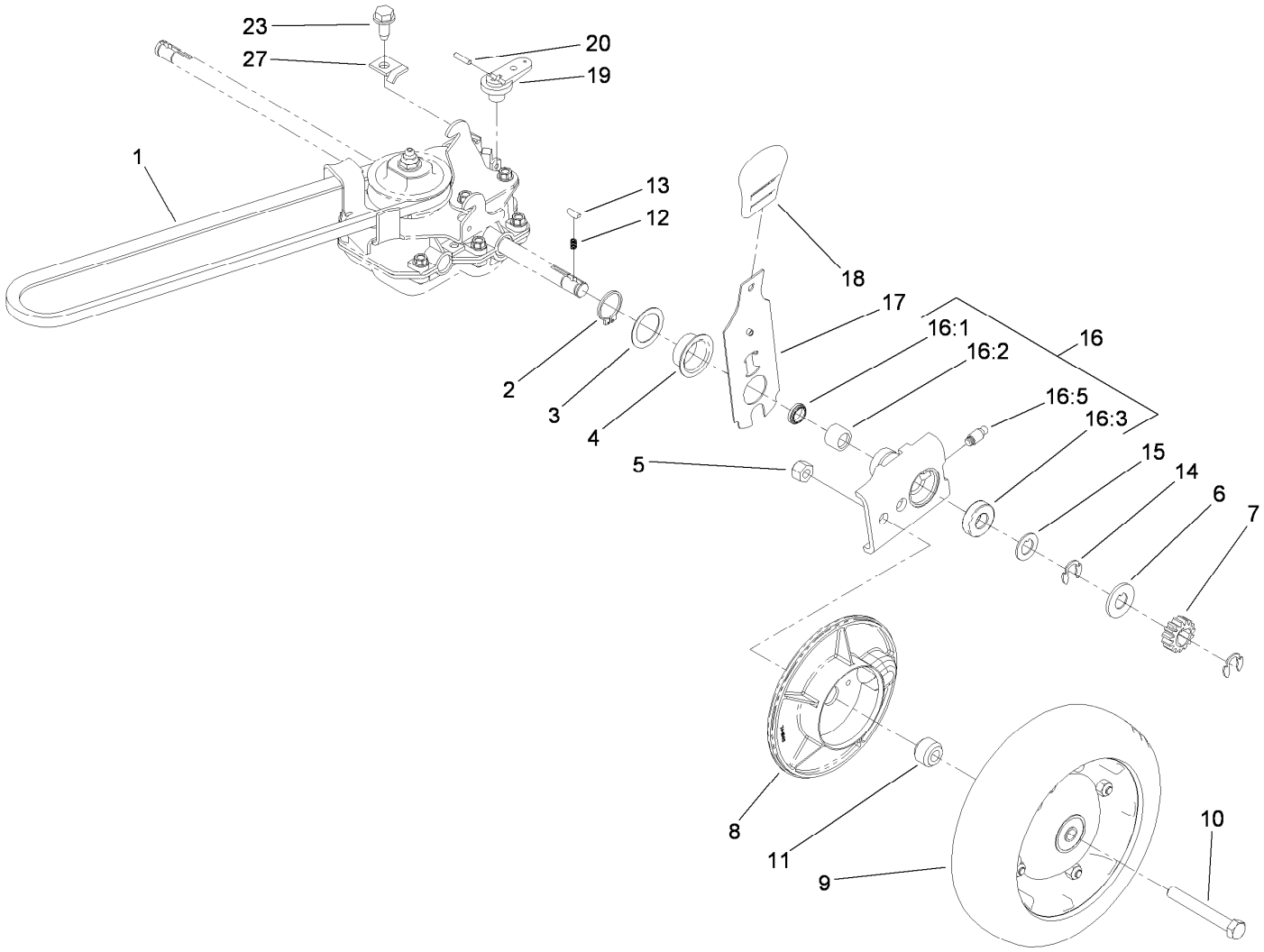

Gearbox and Axle Assembly

Ref.	Part Number	Qty.	Description
1	36-8070	1	V-Belt
2	32151-36	2	Ring-Retaining
3	74-1810	2	Washer
4	48-2170	2	Cap-End
5	32152-2	2	Nut-Lock, Cone
6	62-3830	2	Washer-Thrust, Outer
7	39-9160	2	Gear-Pinion
8	74-1640	2	Cover-Wheel
9	100-2860	2	Wheel And Tire ASM
10	323-13	2	Screw-HH
11	74-1650	2	Spacer-Cover, Wheel
12	39-9650	2	Spring-Compression
13	612066	2	Key
14	32151-68	4	Ring-Retaining
15	49-7700	2	Washer-Thrust, Outer
16	74-1851	2	Pivot Arm ASM
16:1	47-6730	1	Seal-Oil
16:2	117-3500	1	Bearing-Caged Needle Roller
16:3	52-2450	1	Bearing-Wheel
16:5	92-6316	1	Zerk
17	119-2324	2	Rear Spring Arm ASM
18	110-0549	2	Knob-HOC
19	29-9560	1	Lever-Shift
20	32121-99	1	Pin-Coil
23	32144-70	1	Screw-HWHTF
27	62-3720	1	Clamp-Cable
99	106-0975	1	Grass Bag ASM ●

● Not illustrated

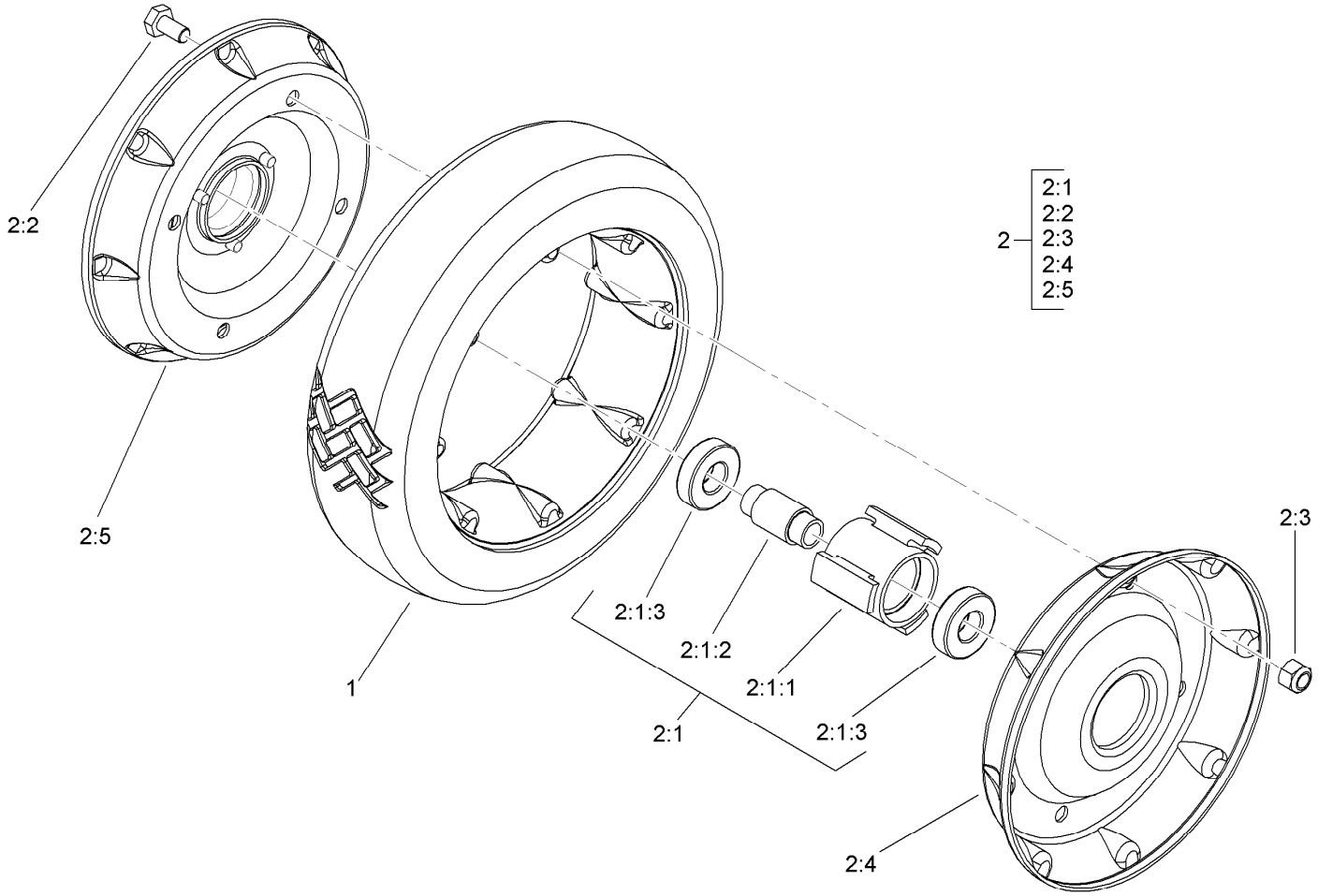

Rear Wheel Assembly No. 100-2860

Ref.	*Part Number*	*Qty.*	*Description*
1	53-7740	1	Tire
2		1	Wheel ASM ●
2:1		1	Hub And Bearing ASM ●
2:1:1	52-2410	1	Hub-Bearing
2:1:2	52-2440	1	Spacer-Bearing
2:1:3	52-2450	2	Bearing-Wheel
2:2	321-2	4	Screw-HH
2:3	3296-42	4	Nut-Lock, NI
2:4	53-7780-06	1	Plate-Wheel, Half
2:5	92-4957-06	1	Wheel Half And Gear ASM

● Not serviced separately

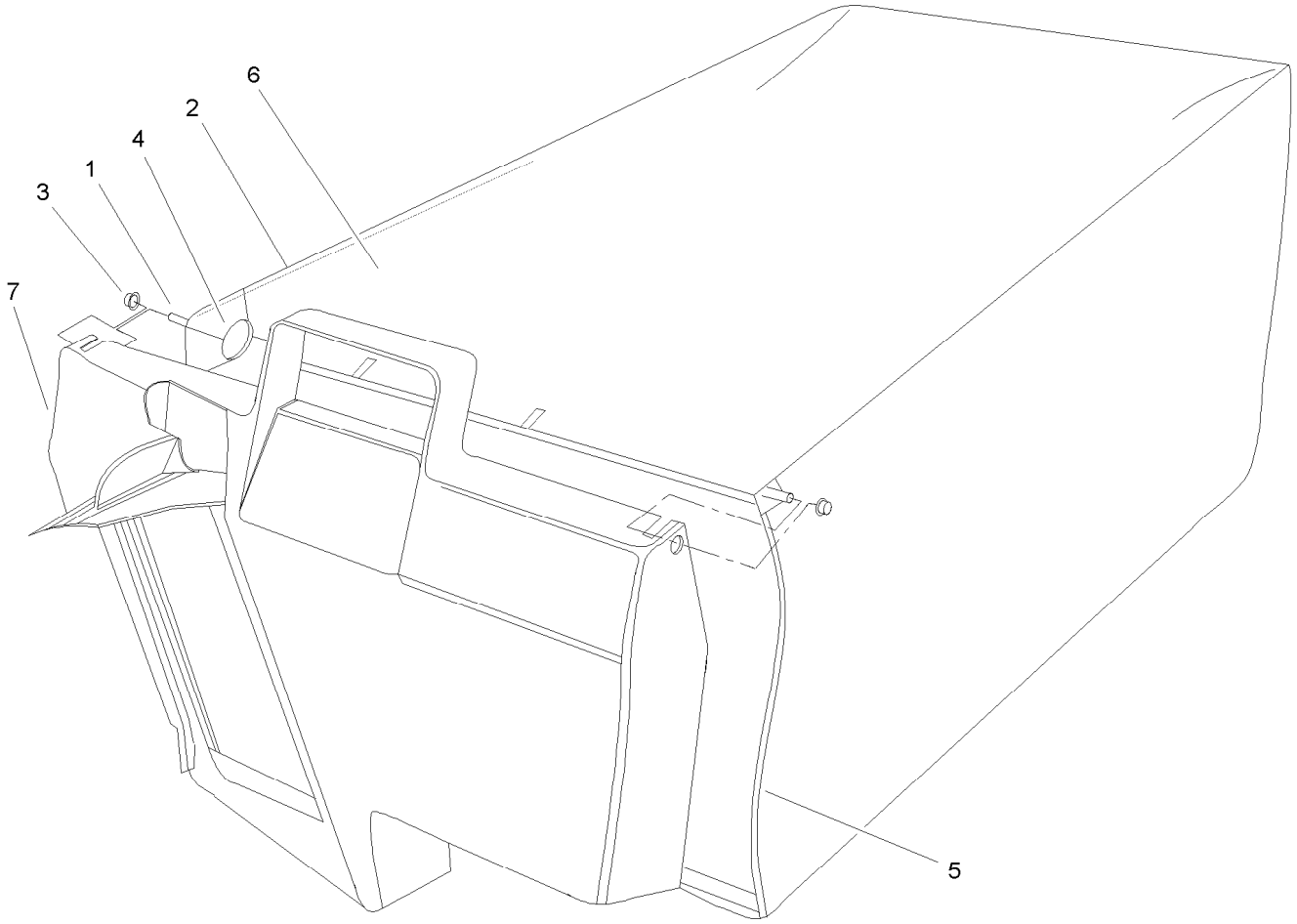

Grass Bag Assembly No. 106-0975

Ref.	*Part Number*	*Qty.*	*Description*
1	33-4820	1	Hinge-Door, Bag
2	42-4030	1	Frame-Bag, Upper
3	3290-422	2	Nut-Push
4	36-6910	2	Spring
5	42-4020	1	Frame-Bag
6	106-0926	1	Bag-Grass
7	48-2840	1	Door-Bag, Grass

Notes:

Notes:

Notes:



Count on it.