FORM NO. 3317–773

TORO®

Lawn & Garden Tractor

Model No. 72046 — 6900001 & Up
Model No. 72064 — 6900001 & Up

Parts Catalog

93–7601 Rev.

ORDERING REPLACEMENT PARTS

To order replacement parts, please supply: the part number, the quantity, and the description of each part desired.

Contents

Description	Page
Hood and Grill	1
Dash	2
Steering Wheel and Tilt	3
Lower Steering	4
Front Axle	5
Seat	6
Fender and Footrest	7
Fuel Tank and Hydro Reservoir	8
Single Cylinder Engine, Muffler, and P.T.O.	9
Clutch	10
Battery	11
Hoodstand and Firewall	12
Lift Lever and Height of Cut	13
Frame	14
Hydro Drive Components	15
Hydro Brake	16
Hydro Control	17
Hydro Transaxle	18
Rear Wheel	19
Crankshaft	20
Crankcase	21
Oil Pan / Lubrication	22
Cylinder Head / Valve / Breather	23
Ignition / Electrical	24
Blower Housing & Baffles	25
Starting System	26
Fuel System	27
Engine Controls	28
Air Intake / Filtration	29
Exhaust	30
Transaxle Case	31
Center Case	32
Pump Shaft	33
Motor Shaft	34
Range Shift	35
Bypass Return	36
Lever Damper	37
N-Centering	38
Brake Interlock	39
Differential Gear	40
Final Pinion	41
Axle Shaft	42
Brake	43
Electric Schematic	44
Wire Harness Routing	45

Accessories

Description	Model / Parts No.
38″ Side Discharge Mower	98215
38″ Mulching Mower	98225
42″ Side Discharge Mower	98230
48″ Side Discharge Mower	98260
38″ Twin Bagger	9920042″/
48″ Vacuum Bagger	99201
48″ Snow Blade	99251
42″ Snow Thrower	99261
36″ Tiller	99271
38″ Mulcher Kit	99270
Hour Meter Kit	92–6898
Indicator Light	92–6897

Part Description Abbreviations

Part descriptions in this catalog may include the following abbreviations.

Abbreviation	Meaning
AR	as required
ASM	assembly
CARR	carriage
DEG	degrees
FH	flat head
GA	gauge

© The TORO Company — 1995
All Rights Reserved

HF ..... hex flange
HFW ..... hex flange washer
HH ..... hex head
HHF ..... hex head flange
HHST ..... hex head self tapping
HJ ..... hex jam
HOC ..... height-of-cut
HS ..... hex socket
HSBH ..... hex socket button head
HSFH ..... hex socket flat head
HSH ..... hex socket head
HWH ..... hex washer head
HWHTF ..... hex washer head thread forming
INC ..... incorporated
LH ..... left hand
PH ..... pan head
PPH ..... Phillips pan head
PTO ..... power take off
RH ..... right hand
SFH ..... slotted fillister head
SH ..... square head
SHWH ..... slotted hex washer head
SPH ..... slotted pan head
STD ..... standard
TAP ..... self tapping
TH ..... truss head
TTH ..... Torx truss head
WH ..... wing head

Important Format Explanations

This catalog uses special formats to convey information in illustrations and parts lists. Specifically, one format is used in conjunction with service assemblies and another with quantities associated with reference numbers.

Service Assemblies

Parts within service assemblies have reference numbers in the form *X:Y*. *X* is the reference number of the service assembly and *Y* is a sequential number unique to each part within the service assembly.

For example, a wheel assembly might be identified by reference number 6, the tire by 6:1, the valve by 6:2, and the wheel by 6:3. When you order the assembly identified by reference number 6, you receive all parts identified by reference numbers 6:1, 6:2, and 6:3. However, you may also order any part individually.

Reference numbers of this type appear in part lists and as callouts in illustrations.

Reference Numbers with Quantities

Illustrations may have a quantity in parentheses next to a reference number, in the form *X (Y)*. *X* is the reference number. *Y* in parentheses is the quantity of the part identified by the reference number.

For example, the illustration callout 4 (2) indicates that two parts are used in that instance.

This Page Intentionally Left Blank

Parts Identified in illustration but not in parts list are not used on this Model

3317–773

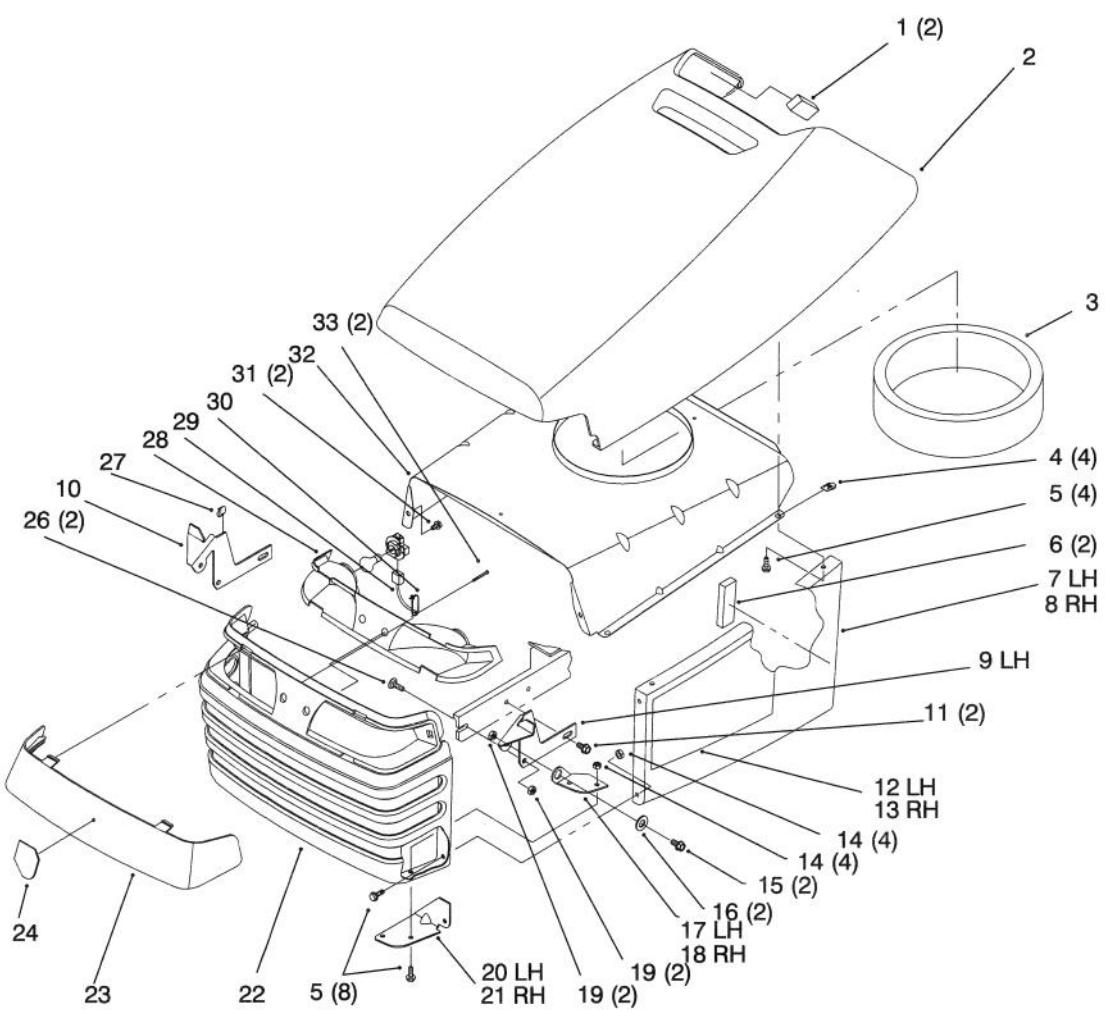

Sheet No.: 2

Hood and Grill

Ref. No.	Part No.	Qty.	Description
2	93–0490	1	Hood
3	92–7077	1	Inlet–Seal Air
4	92–7006	4	Nut
5	32105–15	12	Screw–HH
6	92–7148	2	Foam–Sidepanel
7	93–0491	1	Sidepanel–LH Hood
8	93–0492	1	Sidepanel–RH Hood
9	92–6918–03	1	Bracket–Hinge LH
10	92–6917–03	1	Bracket–Hinge RH
11	32144–14	2	Screw–HH
12	92–6728	1	Decal–Hood LH
13	92–6729	1	Decal–Hood RH
14	32128–10	8	Nut–Lock HHF
15	322–3	2	Screw–HH
16	105503	2	Bushing
17	92–6997–03	1	Hinge–Hood LH
18	92–6996–03	1	Hinge–Hood RH
19	3296–29	4	Nut–Lock
20	92–7049–03	1	Bracket–Hood Hinge LH
21	92–7048–03	1	Bracket–Hood Hinge RH
22	93–0494	1	Grille & Screen ASM
23	92–6656	1	Lens–Headlight
24	92–6987	1	Decal–Horsehead
26	3230–1	2	Screw–CARR

Ref. No.	Part No.	Qty.	Description
27	702366	1	Clip–Wire Retainer
28	88–3970	1	Reflector–Lamp
29	88–4320	1	Harness–Wire
30	614249	1	Tie Strap
31	46–8093	2	Screw–TAP
32	92–6914–03	1	Baffle–Hood Upper
33	32144–32	2	Screw–Plastic

3317–773

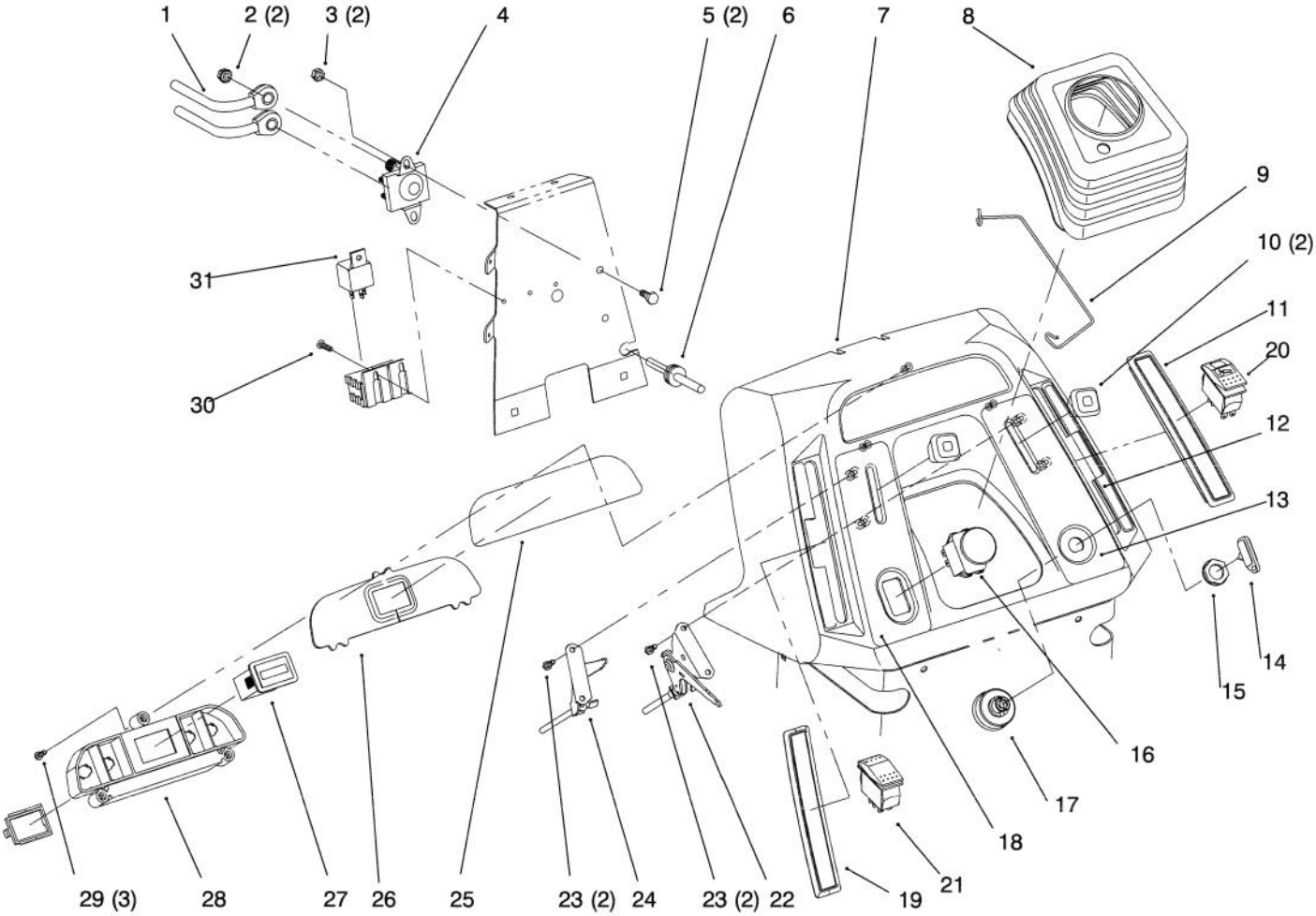

Dash

Ref. No.	Part No.	Qty.	Description
1	92–6989	1	Cable–Battery Red
2	32149–2	2	Nut–Hex Lock
3	3296–42	2	Nut–Lock
4	92–9845	1	Solenoid
5	321–4	2	Screw–HH
6	237–141	1	Grommet
7	94–1894	1	Dash–Hydro
8	92–6680	1	Boot–Steering
9	94–2966	1	Clip–Boot
10	66–0120	2	Knob
11	92–6796	1	Cover–Slot RH
13	92–6721	1	Decal–Throttle/Ignition (Only On: 72046)
13	93–7255	1	Decal–Dash (Only On: 72064)
14	62–7770	1	Key–Ignition
15	700919	1	Nut
16	93–9998	1	Switch–PTO
17	92–6785	1	Switch–Ignition
18	92–6720	1	Decal–Choke/PTO (Only On: 72046)
18	93–7256	1	Decal–Dash (Only On: 72064)
19	92–6797	1	Cover–Slot LH
22	92–6782	1	Control–Throttle
23	32144–32	4	Screw–Plastic

Ref. No.	Part No.	Qty.	Description
24	92–6781	1	Control–Choke
25	92–6975	1	Decal–Dash Lens (Only On: 72064)
25	94–1248	1	Decal–Dash Lens (Only On: 72046)
26	92–6705	1	Lens–Dash
27	94–4208	1	Hourmeter
28	92–6709	1	Light–Indicator (Only On: 72046)
28	92–6732	1	Housing–Indicator Light (Only On: 72064)
29	32104–118	3	Screw–PH
30	32144–8	2	Screw–PPH
31	116397	2	Relay

Parts Identified in illustration but not in parts list are not used on this Model

3317–773

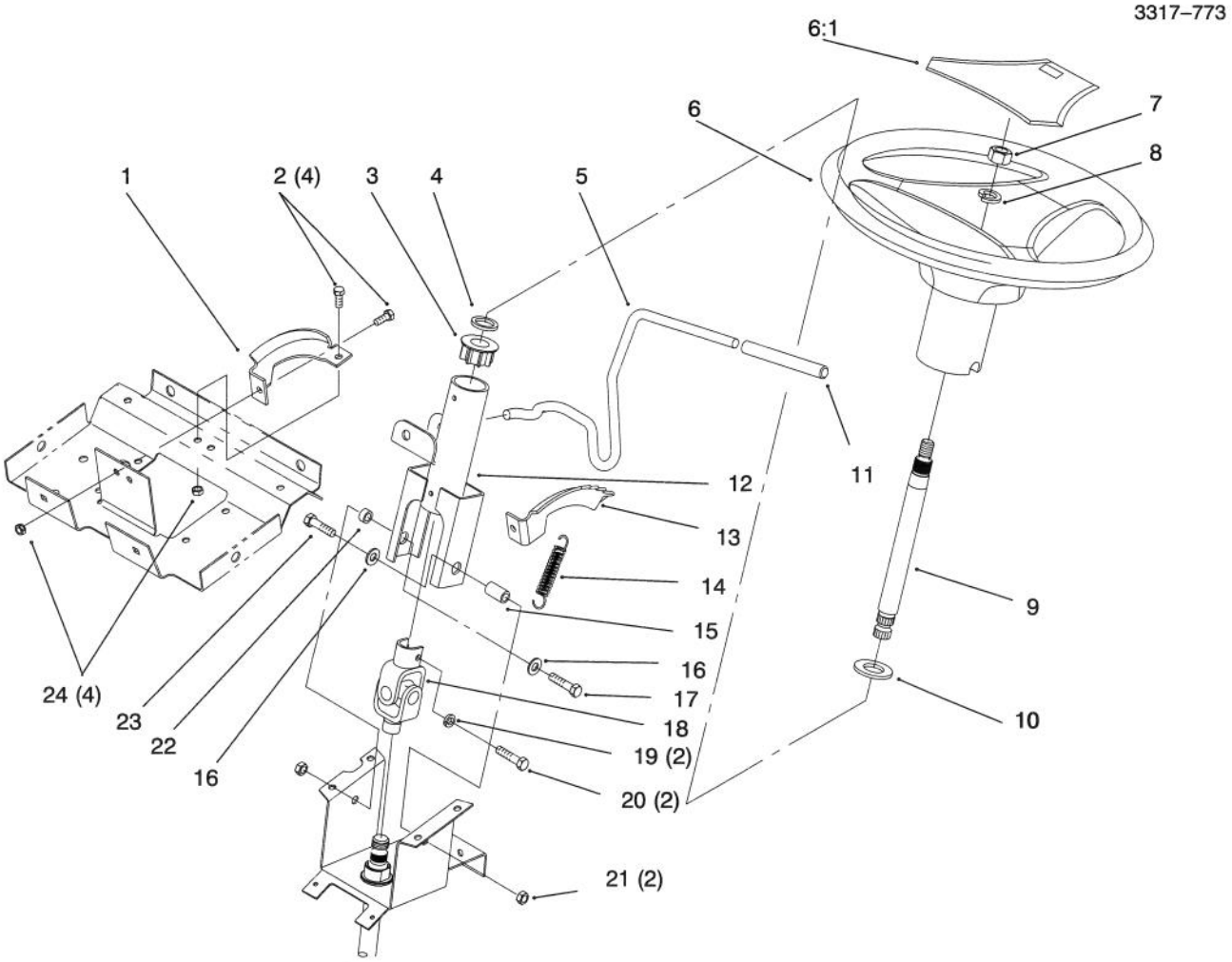

Steering Wheel and Tilt

Ref. No.	Part No.	Qty.	Description
1	92–6777–03	1	Bracket–Support
2	321–4	4	Screw–HH
3	93–1146	1	Bushing–Steering
4	7896	1	Washer–Bowed
5	92–6971	1	Lever–Tilt
6	94–3500	1	Steering Wheel–14" (Only On: 72046)
6	94–3501	1	Steering Wheel–Soft Touc (Only On: 72064)
6:1	88–3870	1	Cover–Steering Wheel
7	3217–9	1	Nut–HH
8	3253–7	1	Washer–Lock
9	94–2874	1	Shaft–Steer Upper
10	3256–28	1	Washer–Flat
11	92–6798	1	Cap–Rod
12	93–1148–03	1	Column
13	92–6776	1	Bracket–Detent
14	93–1357	1	Spring–Extension
15	92–6999	1	Spacer–Yoke
16	3256–23	2	Washer–Flat
17	322–3	1	Screw–HH
18	92–6717	1	U–Joint–Steering
19	3253–4	2	Washer–Lock
20	48–7730	2	Screw–HH
21	3296–29	2	Nut–Lock
22	92–6998	1	Spacer–Yoke

Ref. No.	Part No.	Qty.	Description
23	322–17	1	Screw–HH
24	3296–8	4	Nut–Lock

3317–773

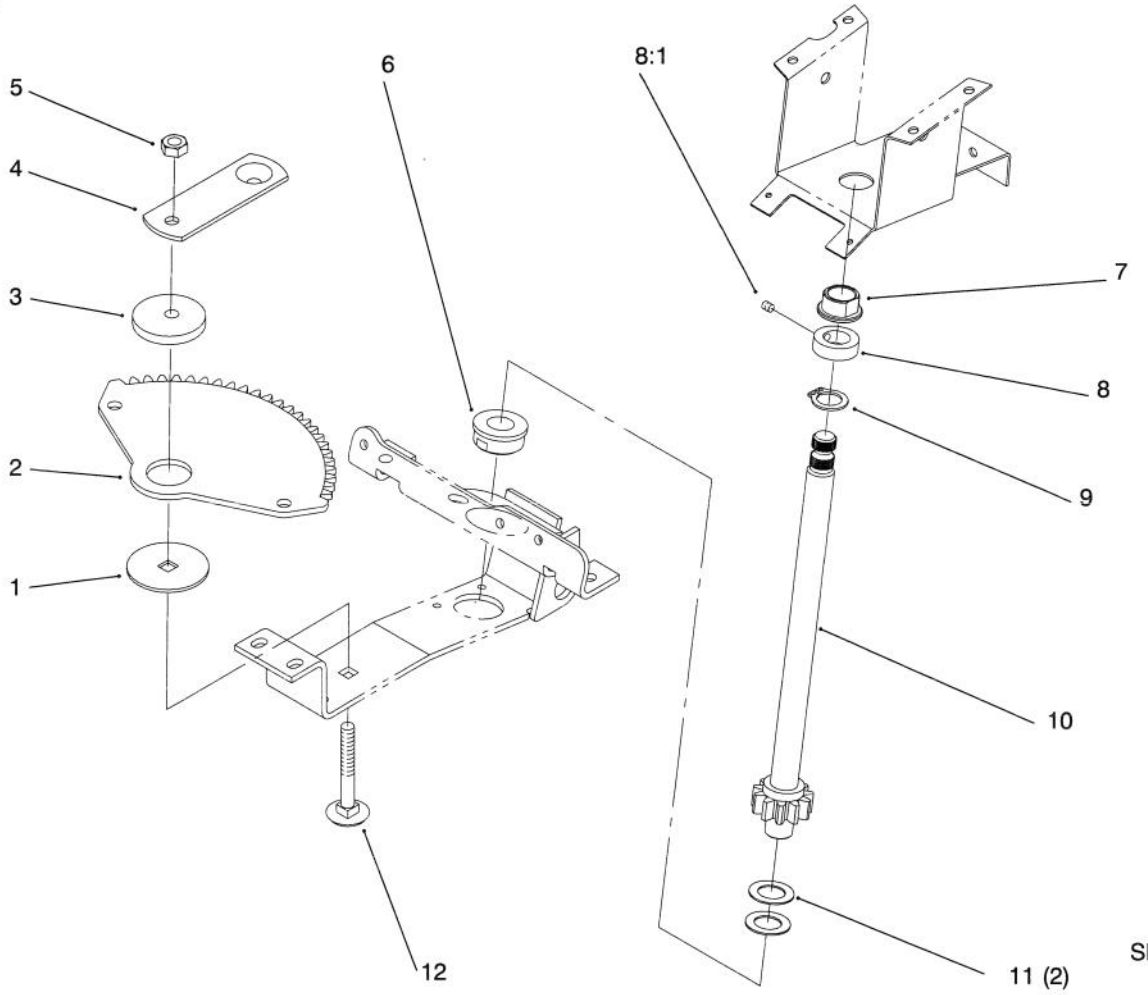

Sheet No.: 8

Lower Steering

Ref. No.	Part No.	Qty.	Description
1	111419	1	Washer–Bearing
2	78–2610	1	Gear–Sector
3	111418	1	Bushing
4	78–9150–03	1	Plate
5	108881	1	Nut–Hex
6	110391	1	Bearing–Wheel
7	109189	1	Bearing–Flange
8	111383	1	Collar W/Set Screw
8:1	3245–32	1	Screw–Set
9	111646	1	Grip Ring
10	92–6702	1	Shaft–Steering Lower
11	1278	2	Washer–Shim
12	3231–4	1	Bolt–CARR

Ref. No.	Part No.	Qty.	Description

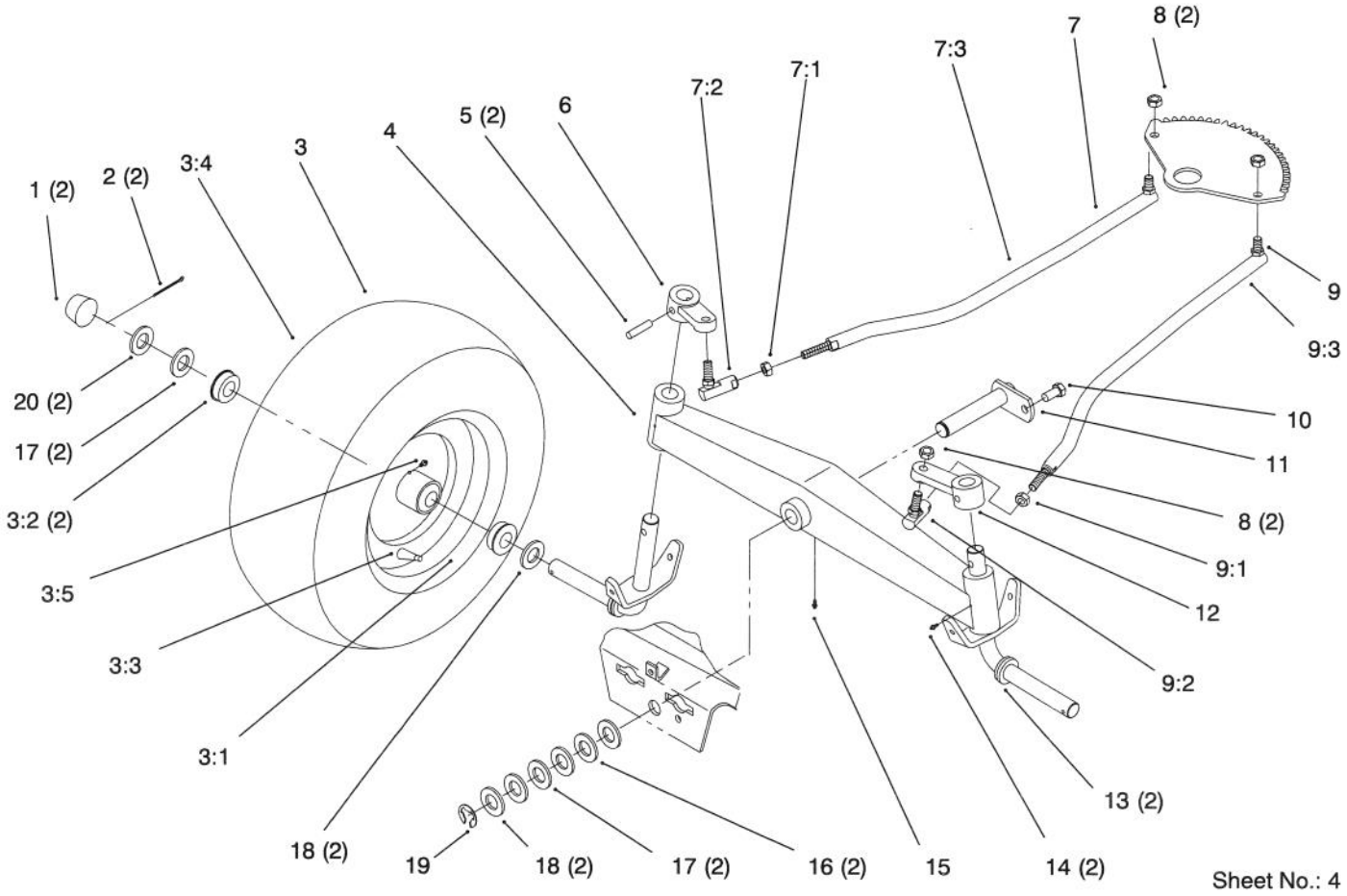

Front Axle

Ref. No.	Part No.	Qty.	Description
1	61–9780	2	Hubcap
2	3272–17	2	Pin–Cotter
☆3		2	ASM–Wheel & Tire
3:1	93–9801	2	ASM–Wheel W/Zerk
3:2	110513	4	Bearing–Wheel
3:3	5108	2	Valve–Tire Tubeless
3:4	117127	2	Tire
4	78–7960–01	1	Axle–Front
5	933270	2	Pin–Roll
6	78–1950–01	1	Arm–Front Spindle LH
7	92–6883	1	Steering Link RH
☆7:1		1	Nut–Hex Jam
7:2	78–2920	1	Joint–Ball
7:3	78–5801	1	Joint–Ball RH W/ Jam Nut
8	9150026	4	Nut–Lock
9	92–6884	1	Steering Link LH
☆9:1		1	Nut–Hex Jam
9:2	78–2920	1	Joint–Ball
9:3	78–5811	1	Joint–Ball LH
10	9267154	1	Screw
11	92–7057–03	1	Pin–Front
12	78–1940–01	1	Arm–Front Spindle RH
13	78–2601–01	2	Spindle
14	302–5	2	Fitting–Grease

Ref. No.	Part No.	Qty.	Description
15	302–11	1	Fitting–Grease 1/4–28x45
16	9202324	2	Washer–10 GA
17	1278	4	Washer–Shim
18	5210	4	Washer–Shim
19	5618	1	Ring–Retaining
20	28–2480	2	Washer–Flat

☆ Not serviced

3317–773

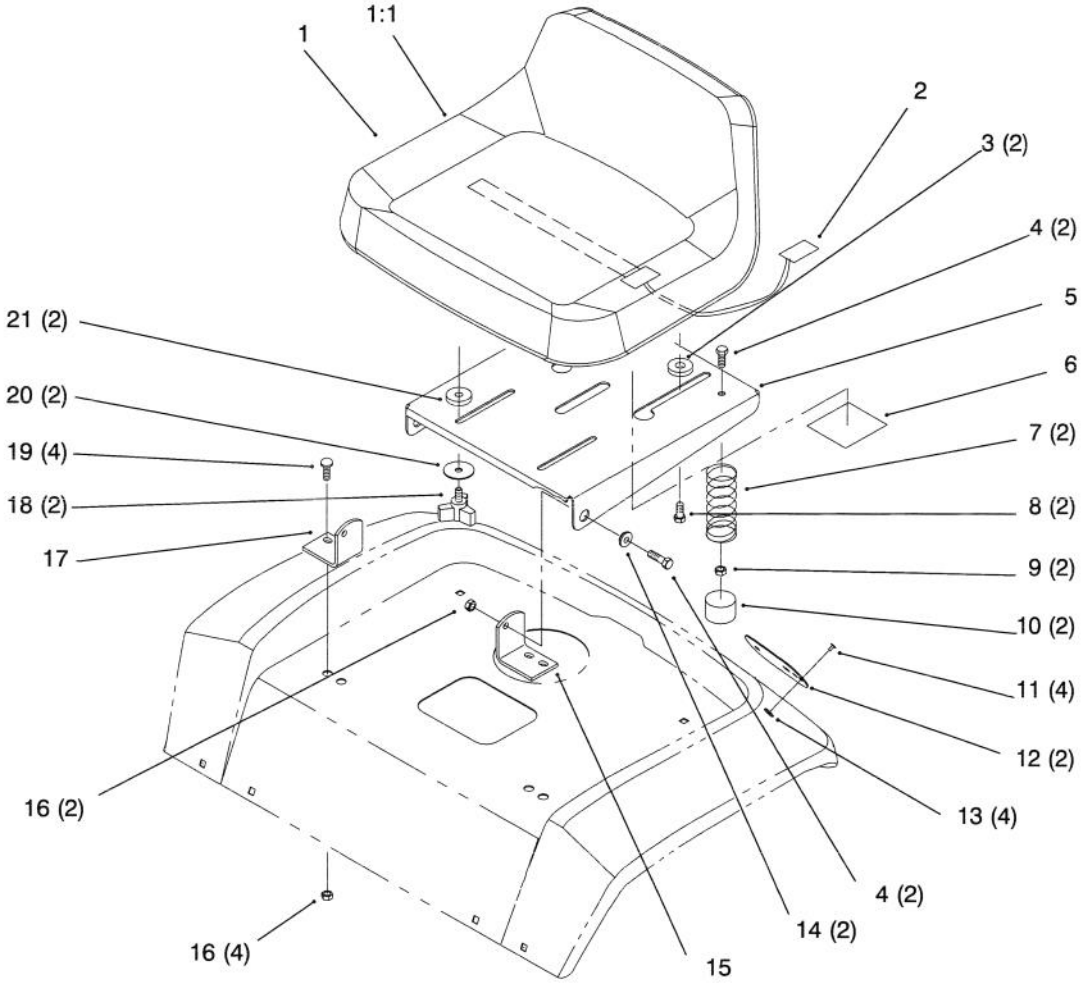

Seat

Ref. No.	Part No.	Qty.	Description
1	88–3950	1	Seat (Only On: 72046)
1	92–6511	1	Seat (Only On: 72064)
1:1	94–4909	1	Trim–Seat (Service) (Only On: 72064)
2	38–1420	1	Switch–Seat
3	92–6750	2	Spacer–Nylon
4	322–5	4	Screw–HH
5	92–6972–03	1	Support–Seat
6	114621	1	Decal–Noise (Only On: 72064)
7	92–7054	2	Spring–Compression
8	92–6986	2	Bolt–Shoulder
9	3296–58	2	Nut–Flange
10	701178	2	Cap–Protector
11	3290–282	4	Pop Rivet
12	106557	2	Reflector
13	3256–49	4	Washer–Flt
14	105503	2	Bushing
15	79–0970–03	1	Bracket–Pivot LH
16	3296–29	6	Nut–Lock
17	79–0950–03	1	Bracket–Pivot RH
18	700806	2	Knob
19	3230–2	4	Screw–CARR
20	94–2869	2	Washer–Flat
21	109989	2	Spacer

Ref. No.	Part No.	Qty.	Description

3317–773

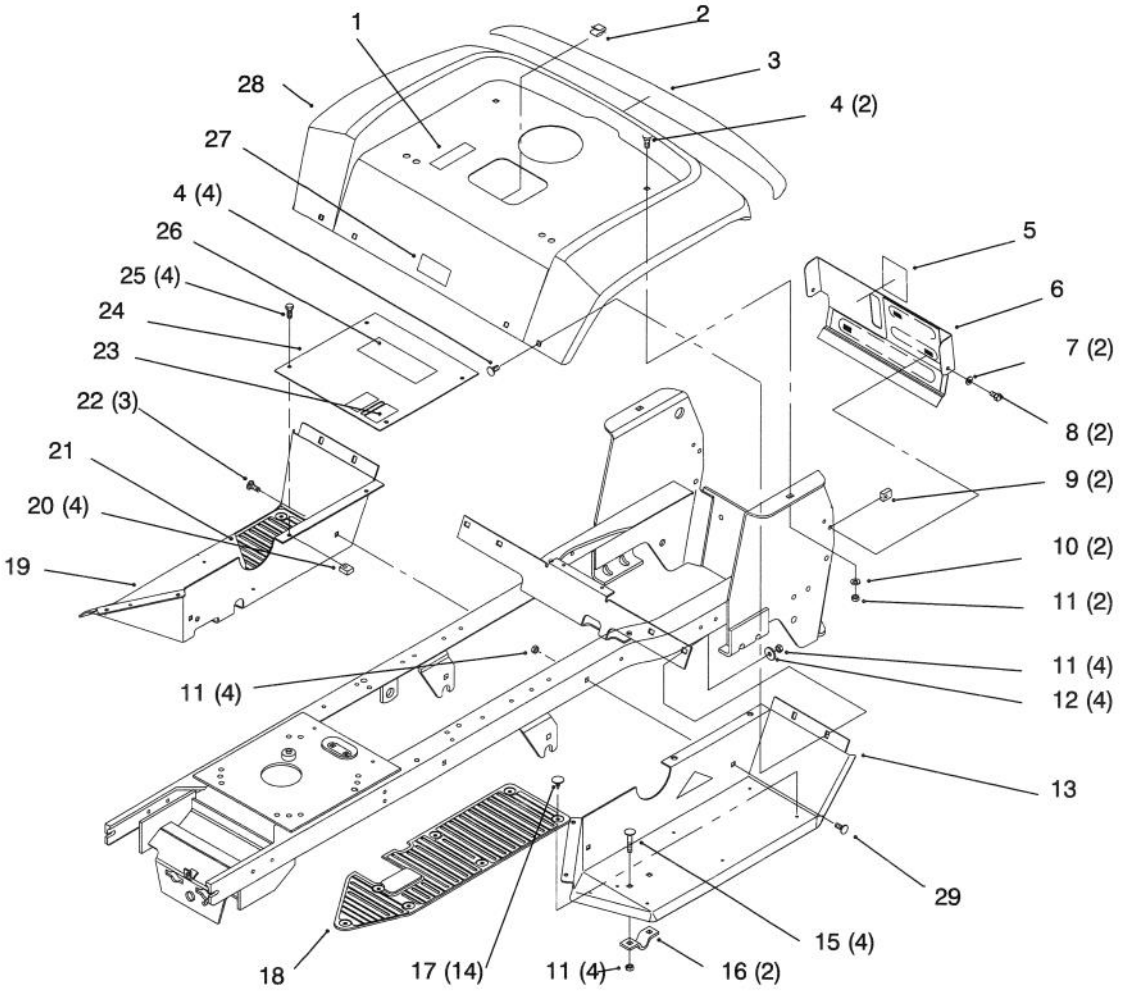

Fender and Footrest

Ref. No.	Part No.	Qty.	Description
☆1		1	Decal–Model/Serial
2	702366	1	Clip–Wire Retainer
3	92–6730	1	Decal–Rear Fender
4	3230–2	6	Screw–CARR
5	92–6727	1	Decal–Fuel Level
6	94–1717–03	1	W.a.–Rear Panel
7	3256–22	2	Washer–Flat
8	321–4	2	Screw–HH
9	609900	2	Nut–Speed
10	3256–23	2	Washer–Flat
11	3296–29	14	Nut–Lock
12	94–2869	4	Washer–Flat
13	92–6746–01	1	Footrest–LH
15	3230–20	4	Bolt–CARR
16	106288	2	Clamp
17	3290–479	14	Fastener–Panel
18	92–6688	1	Mat–Foot LH
19	92–6747–01	1	Footrest–RH
20	107069	4	Nut–Speed
21	92–6687	1	Mat–Foot RH
22	3230–23	3	Screw–CARR
23	92–6725	1	Decal–HOC (Only On: 72046)
23	92–7092	1	Decal–HOC (Only On: 72064)
24	93–0489–01	1	Plate–Footrest

Ref. No.	Part No.	Qty.	Description
			W/Decal (Only On: 72046)
24	94–4243–01	1	Plate–Footrest W/Decal (Only On: 72064)
25	92–7020	4	Screw–TTH
26	92–8946	1	Decal–Danger (Only On: 72046)
26	93–7314	1	Decal–Danger (Only On: 72064)
27	76–1340	1	Decal–USA (Only On: 72046)
28	92–6795–01	1	Fender
29	3230–23	1	Screw–CARR

☆ Not serviced

3317–773

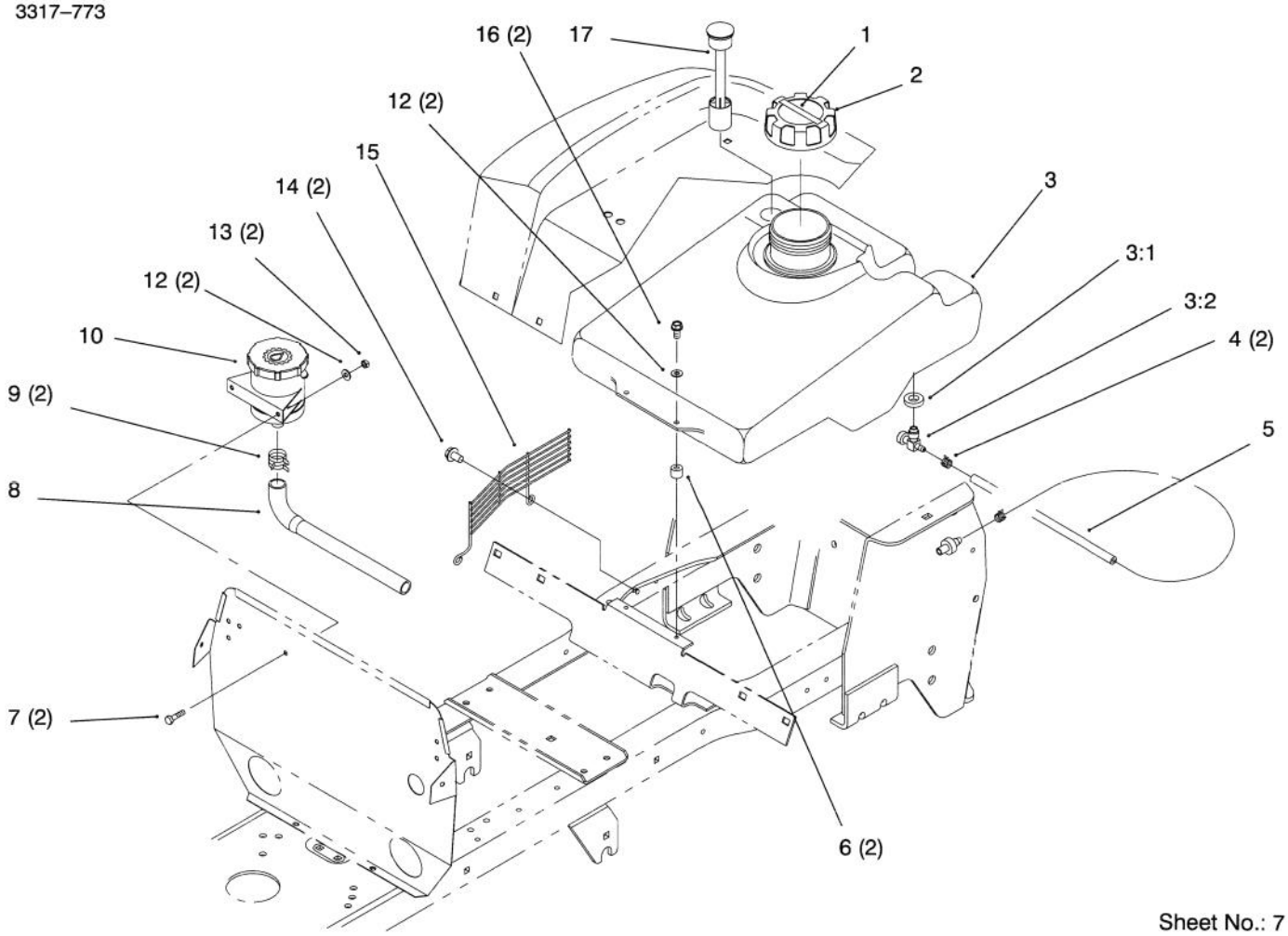

Sheet No.: 7

Fuel Tank and Hydro Reservoir

Ref. No.	Part No.	Qty.	Description
☆1		1	Decal–Oil Check
2	88–3980	1	Gas Cap ASM
3	94–2979	1	Tank–Gas
3:1	104048	1	Fuel Valve
3:2	104047	1	Bushing
4	2412–98	2	Clamp–Hose
5	92–6754	1	Hose–Fuel Line
6	93–1144	2	Spacer–Fuel Tank
7	321–4	2	Screw–HH
8	92–6737	1	Hose
9	2412–129	2	Clamp–Hose
10	79–3500	1	Reservoir
12	3256–22	4	Washer–Flat
13	3296–42	2	Nut–Lock
14	32144–14	2	Screw–HH (Only On: 72064)
15	93–9275	1	Guard–Fan (Only On: 72064)
16	32104–96	2	Screw–HHST

Ref. No.	Part No.	Qty.	Description

☆ Not serviced

Parts Identified in illustration but not in parts list are not used on this Model

3317–773

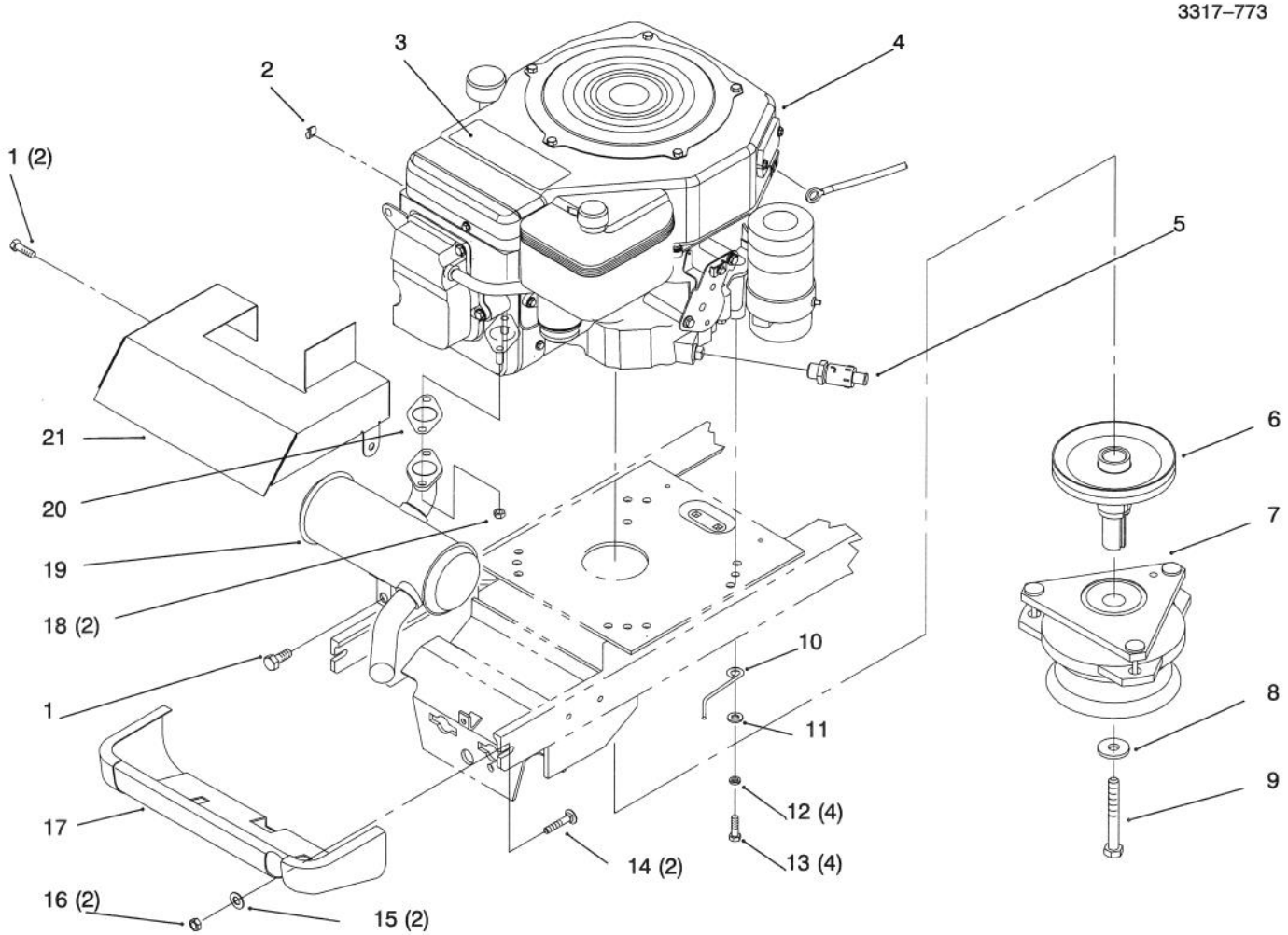

Single Cylinder Engine, Muffler, and P.T.O.

Ref. No.	Part No.	Qty.	Description
1	9266934	3	Screw–HWHTF
2	702366	1	Clip–Wire Retainer
3	94–2970	1	Decal–Toro Power Plus 15
4	94–3329	1	Engine–Kohler (Only On: 72046)
4	94–3330	1	Engine–Kohler (Only On: 72064)
5	92–6877	1	Valve–Oil Drain
6	92–6888	1	Pulley
7	92–6885	1	Clutch–PTO (Only On: 72064)
7	94–2514	1	Clutch–Electric PTO (Only On: 72046)
8	112843	1	Washer–PTO
9	115203	1	Screw–HH
12	3253–4	4	Washer–Lock
13	48–7730	4	Screw–HH
14	3231–25	2	Screw–CARR
15	3256–24	2	Washer–Flat
16	3296–39	2	Nut–Lock
17	92–6867–01	1	Shield–Muffler
18	92–6780	2	Nut–HHF
19	92–6862	1	Muffler
20	92–6716	1	Gasket–Exhaust
21	92–6878–03	1	Baffle–Muffler

Ref. No.	Part No.	Qty.	Description

3317–773

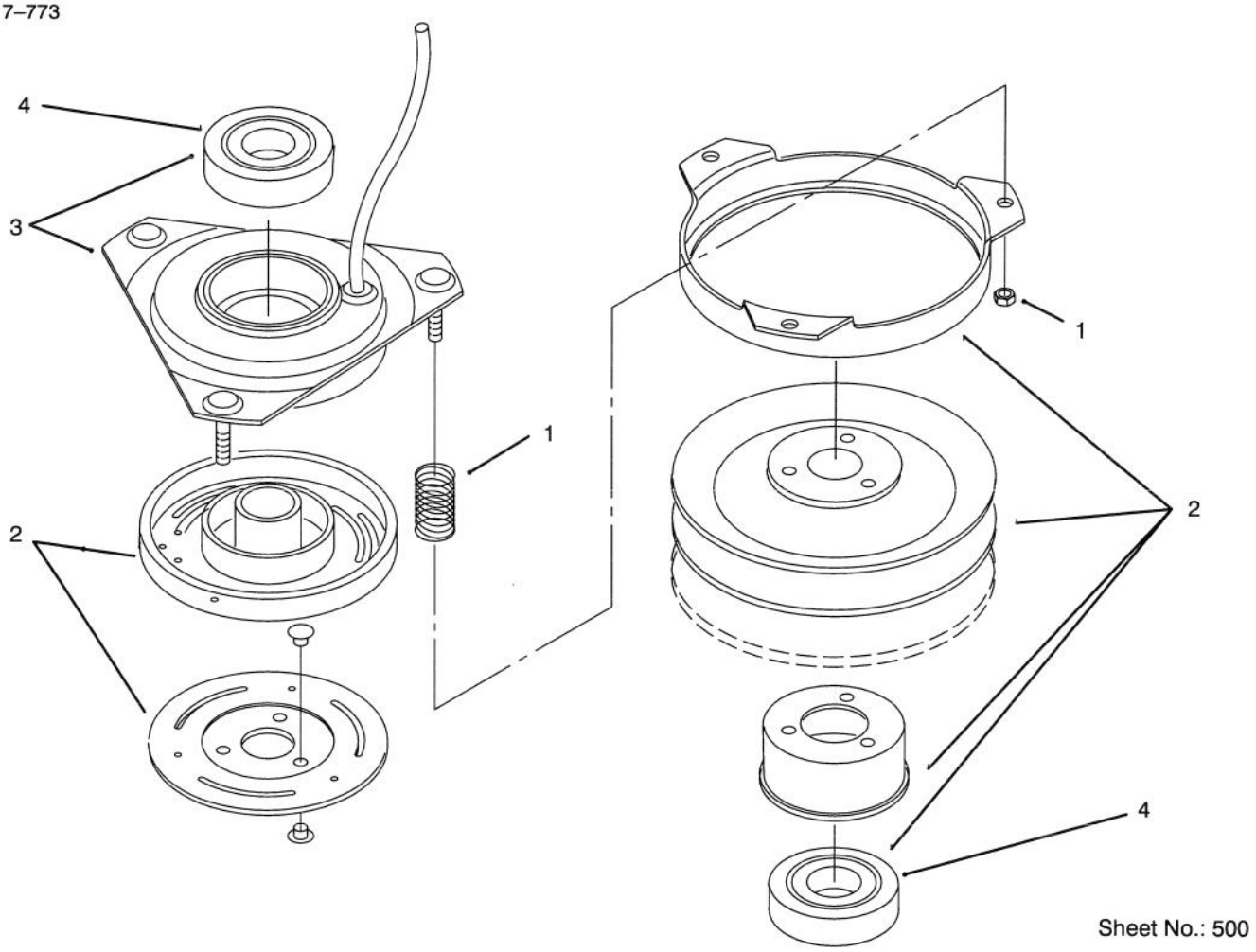

Sheet No.: 500

Clutch

Ref. No.	Part No.	Qty.	Description
1	92–3014	3	Nut & Spring ASM
2	94–4930	1	Rotor & Armature ASM (Only On: 72046)
2*	92–3015	1	Rotor ASM W/Bearing (Only On: 72064)
3	92–3016	1	Field ASM W/Bearing)
4	114064	2	Bearing–Elec Clutch

Ref. No.	Part No.	Qty.	Description

*Not Illustrated

Parts Identified in illustration but not in parts list are not used on this Model

3317–773

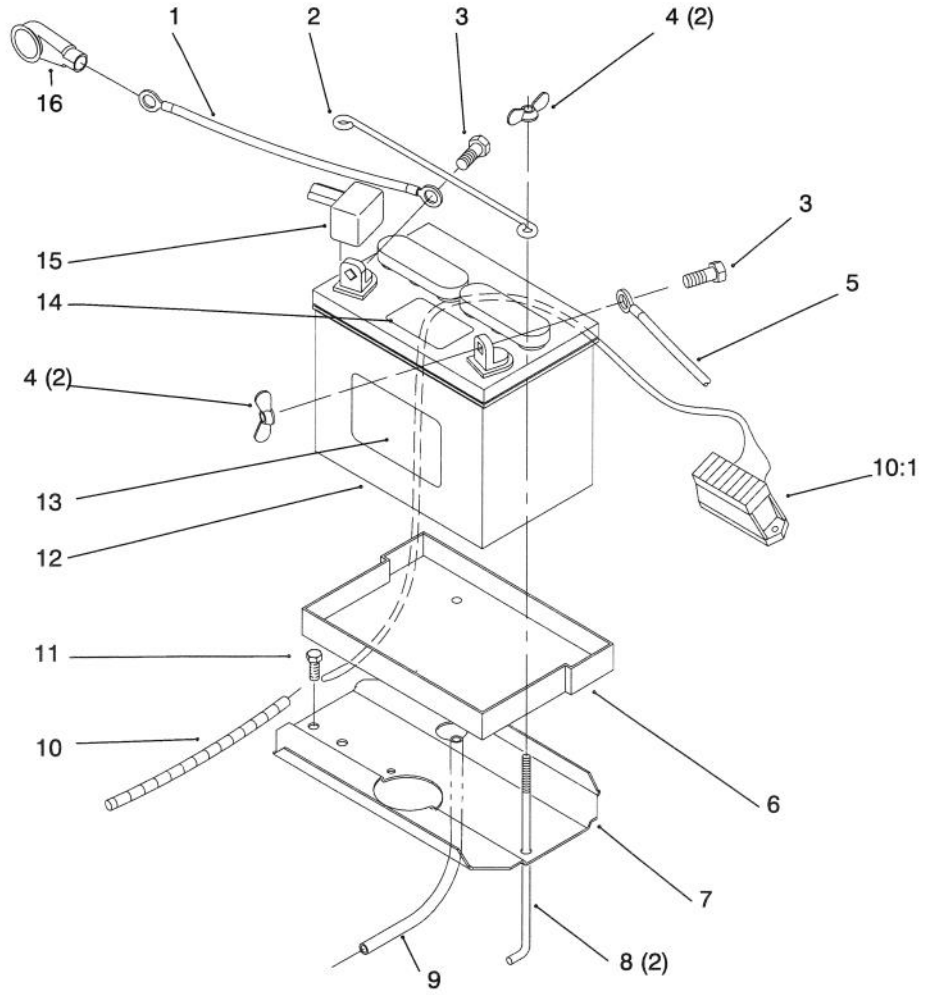

Sheet No.: 6

Battery

Ref. No.	Part No.	Qty.	Description
1	92–6990	1	Cable–Battery Red
2	117316	1	Rod–Battery Hold Down
3	321–4	2	Screw–HH
4	32103–22	4	Nut–Wing
5	111078	1	Cable–Battery Black
6	106948	1	Tray–Battery
7	78–6820–03	1	Plate–Battery
8	109547	2	Hook–Battery
9	114720	1	Tube–Battery Drain
10	94–2862	1	Harness–Wire
11	32144–14	1	Screw–HH
12	105842	1	Battery
13	93–6668	1	Decal–Battery Charge Ins (Only On: 72064)
14	93–7276	1	Decal–Danger (Only On: 72064)
15	109553	1	Boot–Battery Cable

Ref. No.	Part No.	Qty.	Description

Parts Identified in illustration but not in parts list are not used on this Model

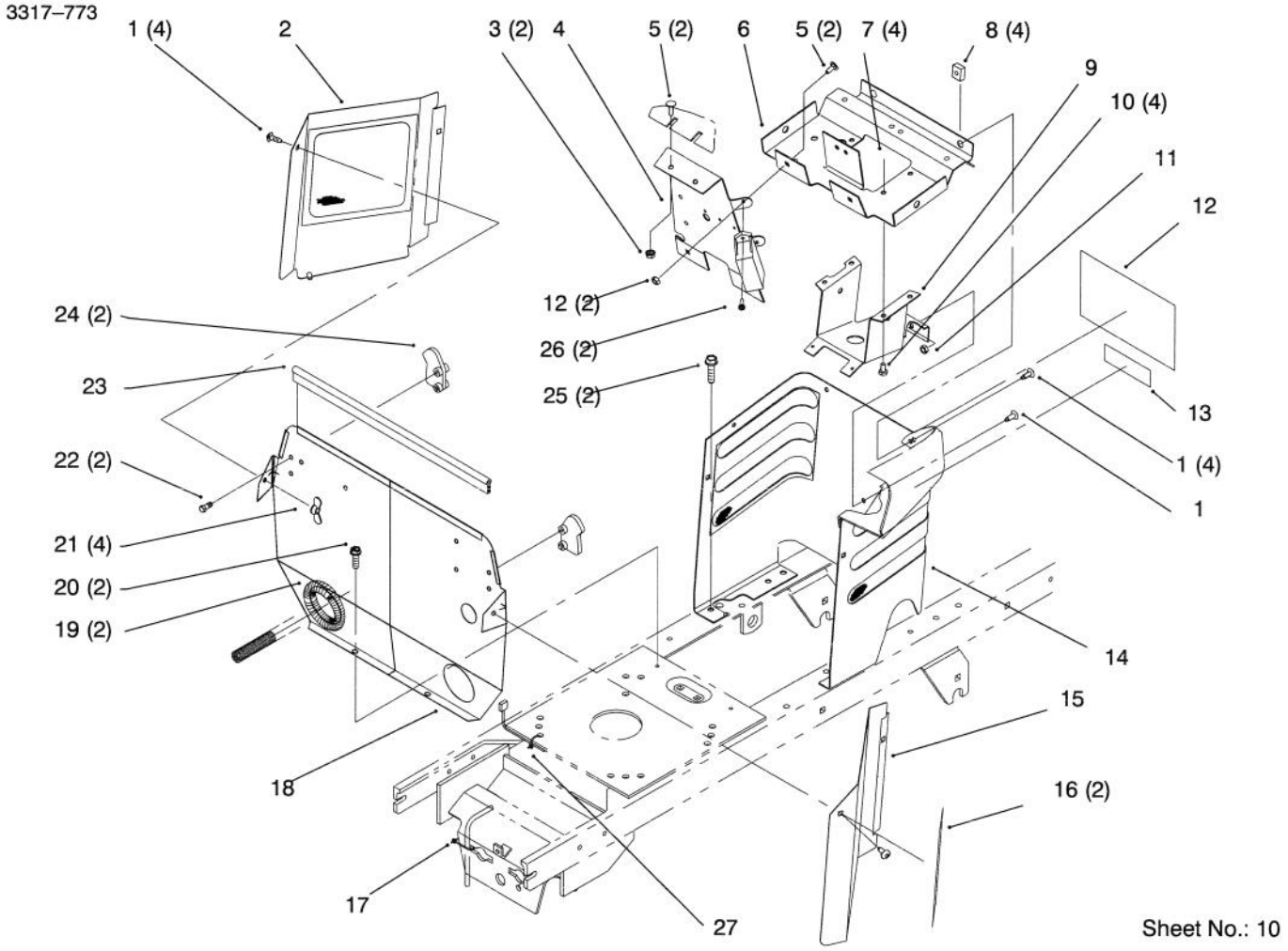

Hoodstand and Firewall

Ref. No.	Part No.	Qty.	Description
1	92–7020	9	Screw–TTH
2	92–6937–03	1	Cover–Side RH
3	32149–2	2	Nut–Hex Lock
4	94–1712–03	1	Panel–Support
5	3229–11	4	Bolt–CARR
6	92–6859–03	1	Support–Dash
7	3296–8	4	Nut–Lock
8	92–6860	4	Nut–Retainer
9	92–6778–03	1	Support–Column
10	321–4	4	Screw–HH
11	3296–42	3	Nut–Lock
12	93–0302	1	Decal–Slope/Park Brake (Only On: 72046)
12	93–7313	1	Decal–Danger (Only On: 72064)
13	83–6620	1	Decal–Instruction
14	93–0486–03	1	Hoodstand W/Decals (Only On: 72046)
14	93–0488–03	1	Hoodstand W/Decals (Only On: 72064)
15	92–6936–03	1	Cover–Side LH
16	94–2973	2	Decal–265–H
17	614249	1	Tie Strap
18	94–1749–03	1	Firewall
19	24–7924	2	Cover–Drive Shaft

Ref. No.	Part No.	Qty.	Description
20	32144–4	2	Screw–TAP
21	32103–22	4	Nut–Wing
22	46–8093	2	Screw–TAP
23	93–1131	1	Trim–Seal
24	92–6960	2	Latch–Hood
25	32144–14	2	Screw–HH
26	32144–8	2	Screw–PPH
27	614249	1	Tie Strap

Parts Identified in illustration but not in parts list are not used on this Model

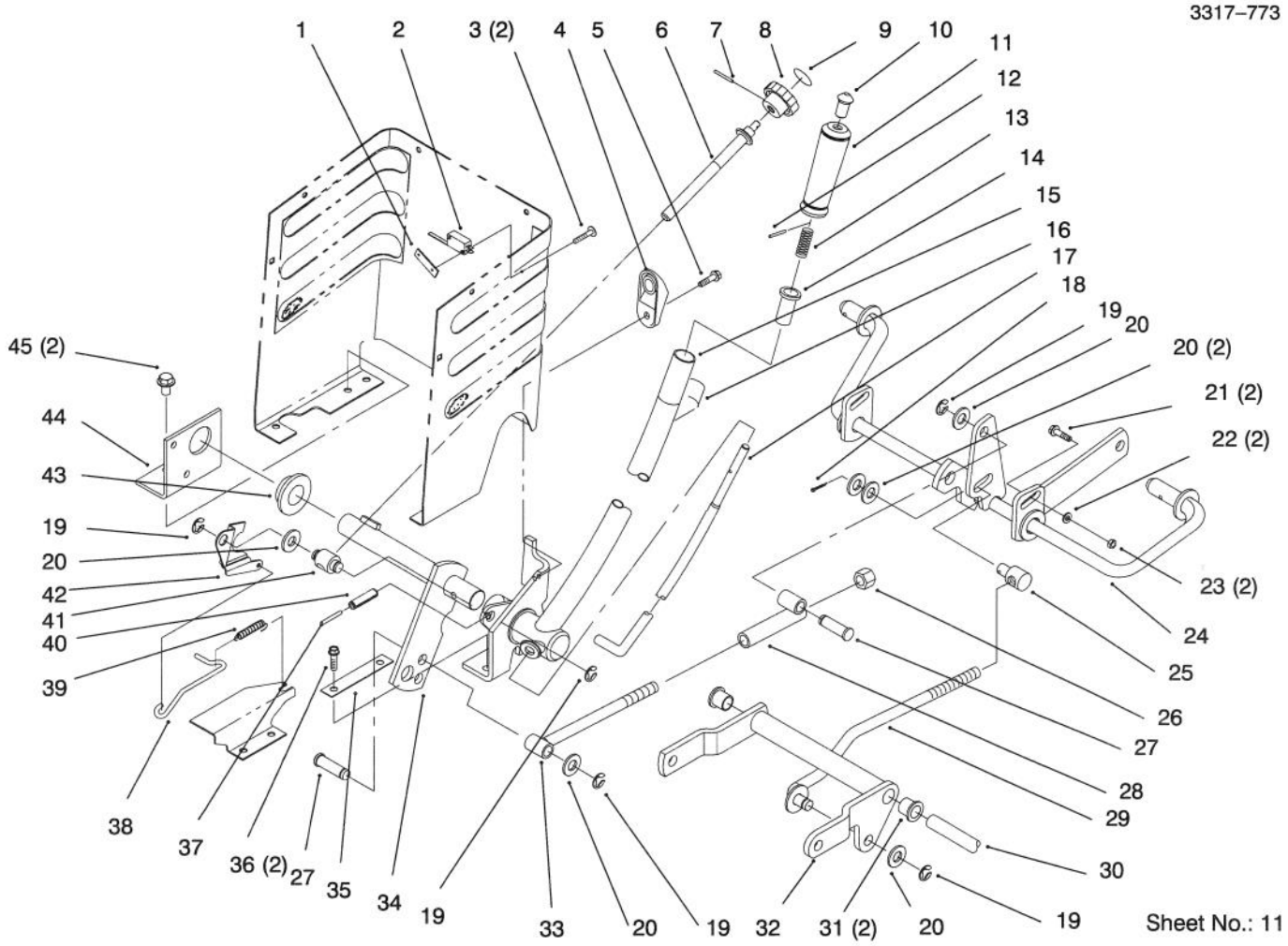

Lift Lever and Height of Cut

Ref. No.	Part No.	Qty.	Description
1	3290–354	1	Nut–Speed
2	88–9930	1	Switch–Micro
3	147665	2	Screw
4	92–6794	1	Wedge–HOC Adjust
5	32144–4	1	Screw–TAP
6	92–6965	1	Rod–HOC
7	933141	1	Pin–Spirol
8	115593	1	Knob
9	78–9740	1	Decal–HOC Knob
10	92–6711	1	Tip–Rod
11	92–6710	1	Grip–Handle
12	933148	1	Pin–Spirol
13	3624	1	Spring–Compression
14	8130	1	Retainer–Spring
15	94–3761–03	1	Lift Lever Wa
16	112168	1	Decal–Lift (Only On: 72046)
16	93–7323	1	Decal–Lift (Only On: 72064)
17	92–6977–03	1	Rod–Lift Lever
18	3272–6	1	Pin–Cotter
19	32120–47	5	Ring–Retaining
20	3256–26	6	Washer–Flt
21	3231–25	2	Screw–CARR
22	3256–24	2	Washer–Flat
23	3296–39	2	Nut–Lock

Ref. No.	Part No.	Qty.	Description
24	79–3401–03	1	Gage Shaft
25	8870	1	Trunnion
26	3296–23	1	Nut–Lock
27	79–1250	2	Pin
28	78–7390	1	Link
29	78–2431	1	Rod
30	94–4944	1	Shaft
31	256–90	2	Bushing–Flange
32	92–6855–03	1	Arm
33	78–7360	1	Rod
34	94–3552–03	1	Lift Arm W.a.
35	78–6810–03	1	Plate
36	32144–14	2	Screw–HH
37	32121–103	1	Pin–Spring
38	92–6978	1	Rod–HOC Indicator
39	92–7007	1	Spring–Extension
40	32121–25	1	Pin–Roll
41	78–2140	1	Trunnion
42	92–6979	1	Plate–HOC Gage
43	106269	1	Bearing–Flange
44	93–0523–03	1	Bracket–Pivot Linkage
45	32144–14	2	Screw–HH

3317–773

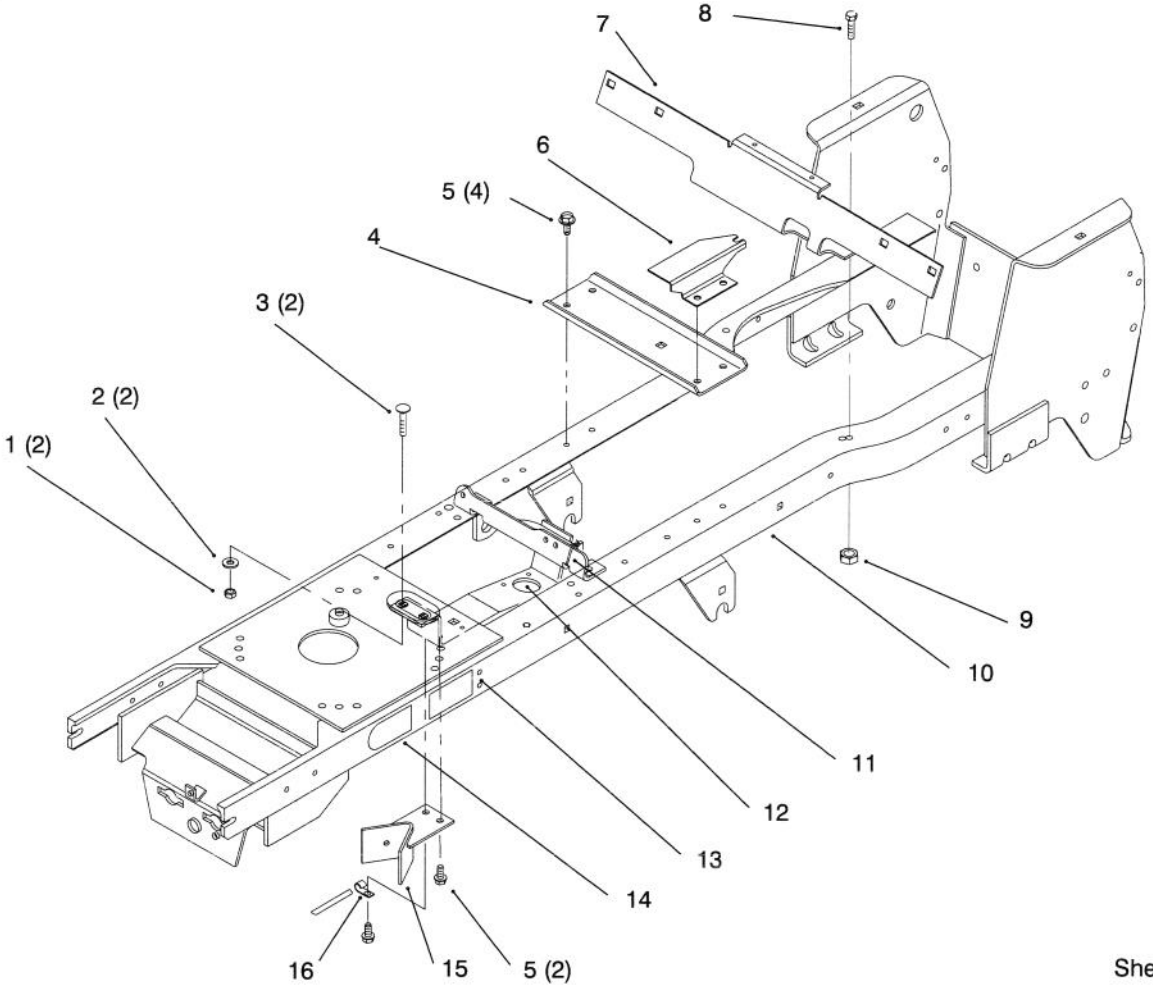

Sheet No.: 14

Frame

Ref. No.	Part No.	Qty.	Description
1	3296–29	2	Nut–Lock
2	3256–23	2	Washer–Flat
3	3230–2	2	Screw–CARR
4	92–6868–03	1	Bracket–Idler
5	32144–14	6	Screw–HH
6	92–6964–03	1	Bracket–HOC
7	92–6674–03	1	Support–Fender
8	322–5	1	Screw–HH
9	3296–29	1	Nut–Lock
10	94–2668	1	Frame Wa
11	614249	1	Tie Strap
12	92–6992–03	1	Bracket–Steering
13	93–7324	2	Decal–Installation (Only On: 72064)
14	92–8747	2	Decal–Attach A Matic
15	78–2491–03	1	Stop–PTO
16	8830	1	Retainer–"j"

Ref. No.	Part No.	Qty.	Description

Parts Identified in illustration but not in parts list are not used on this Model

3317–773

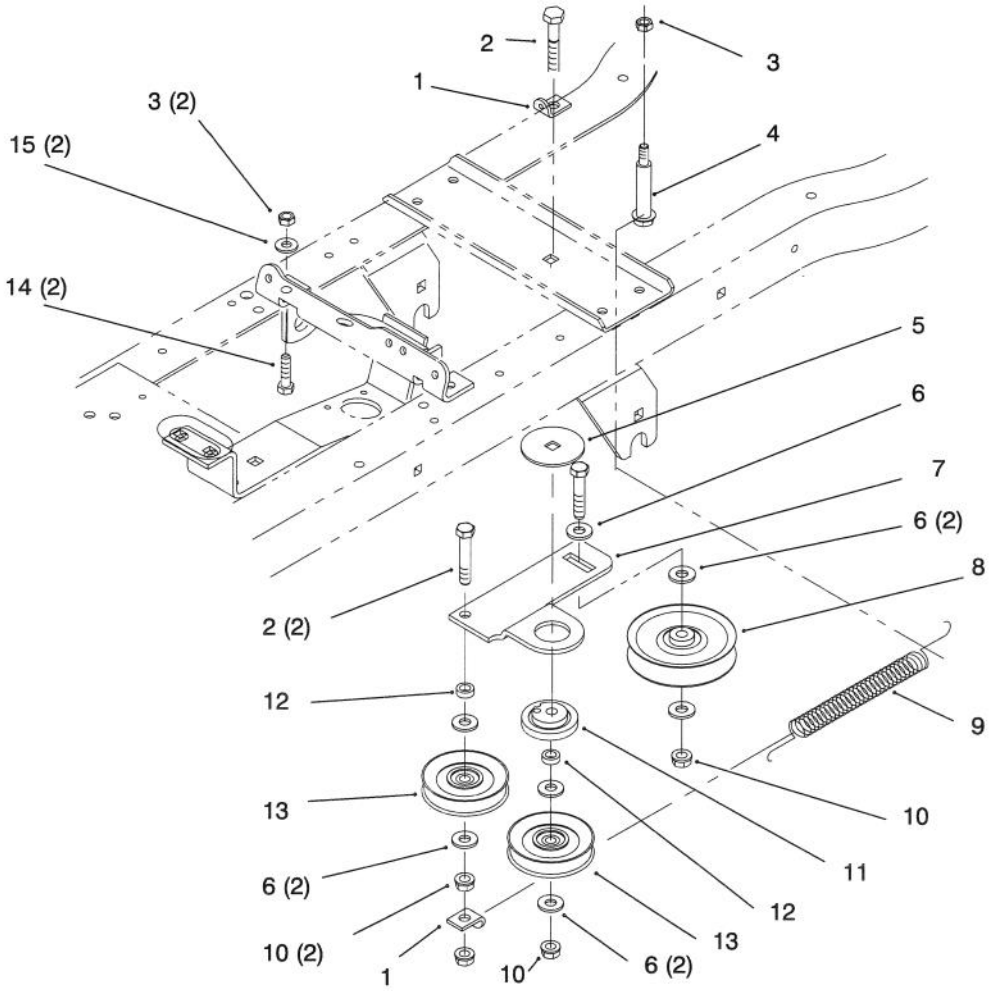

Sheet No.: 3

Hydro Drive Components

Ref. No.	Part No.	Qty.	Description
1	2534	2	Clip–Spring
2	323–10	3	Screw–HH
3	3296–29	3	Nut–Lock
4	88–4590	1	Bolt–Shoulder
5	111419	1	Washer–Bearing
6	3256–24	7	Washer–Flat
7	92–6900	1	Arm–Idler
8	92–7101	1	Pulley–Flat
9	79–7530	1	Spring–Extension
10	3296–59	4	Nut–Lock
11	111418	1	Bushing
12	93–3658	2	Spacer
13	92–7102	2	Pulley–Idler
14	322–5	2	Screw–HH
15	3256–23	2	Washer–Flat

Ref. No.	Part No.	Qty.	Description

3317–773

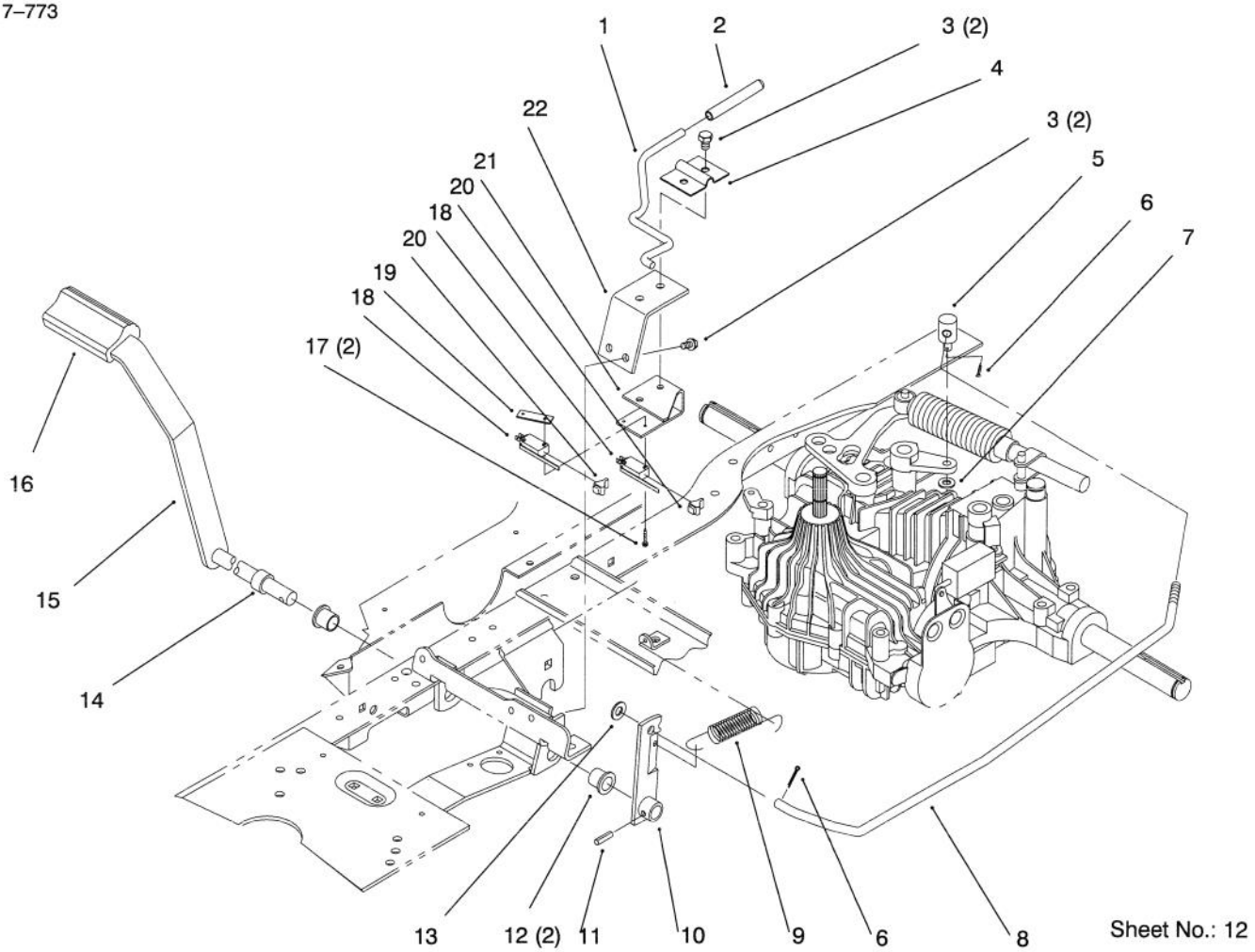

Sheet No.: 12

Hydro Brake

Ref. No.	Part No.	Qty.	Description
1	93–3167	1	Rod–Park Brake
2	92–7009	1	Grip–Parking Brake
3	32144–14	4	Screw–HH
4	92–7000–03	1	Bracket–Park Brake
5	92–6968	1	Trunnion–Brake
6	3272–6	2	Pin–Cotter
7	3256–23	1	Washer–Flat
8	92–6988	1	Rod–Brake
9	93–0540	1	Spring–Extension
10	94–1722–03	1	Lever–Brake
11	32121–69	1	Pin–Spring
12	256–90	2	Bushing–Flange
13	3256–24	1	Washer–Flat
14	92–6982	1	Spacer–Brake
15	94–4233–03	1	Brake Pedal Wa
16	65–2920	1	Pad–Pedal
16	92–6949	1	Tube–Brake
16	94–1720	1	Lever–Brake
17	147665	2	Screw
18	88–9932	1	Switch – Micro
19	3290–354	1	Nut–Speed
20	93–3240	1	Seal–Plunger
21	93–0520–03	1	Bracket–Micro Sw
22	92–7004–03	1	Support–Park Brake

Ref. No.	Part No.	Qty.	Description

Parts Identified in illustration but not in parts list are not used on this Model

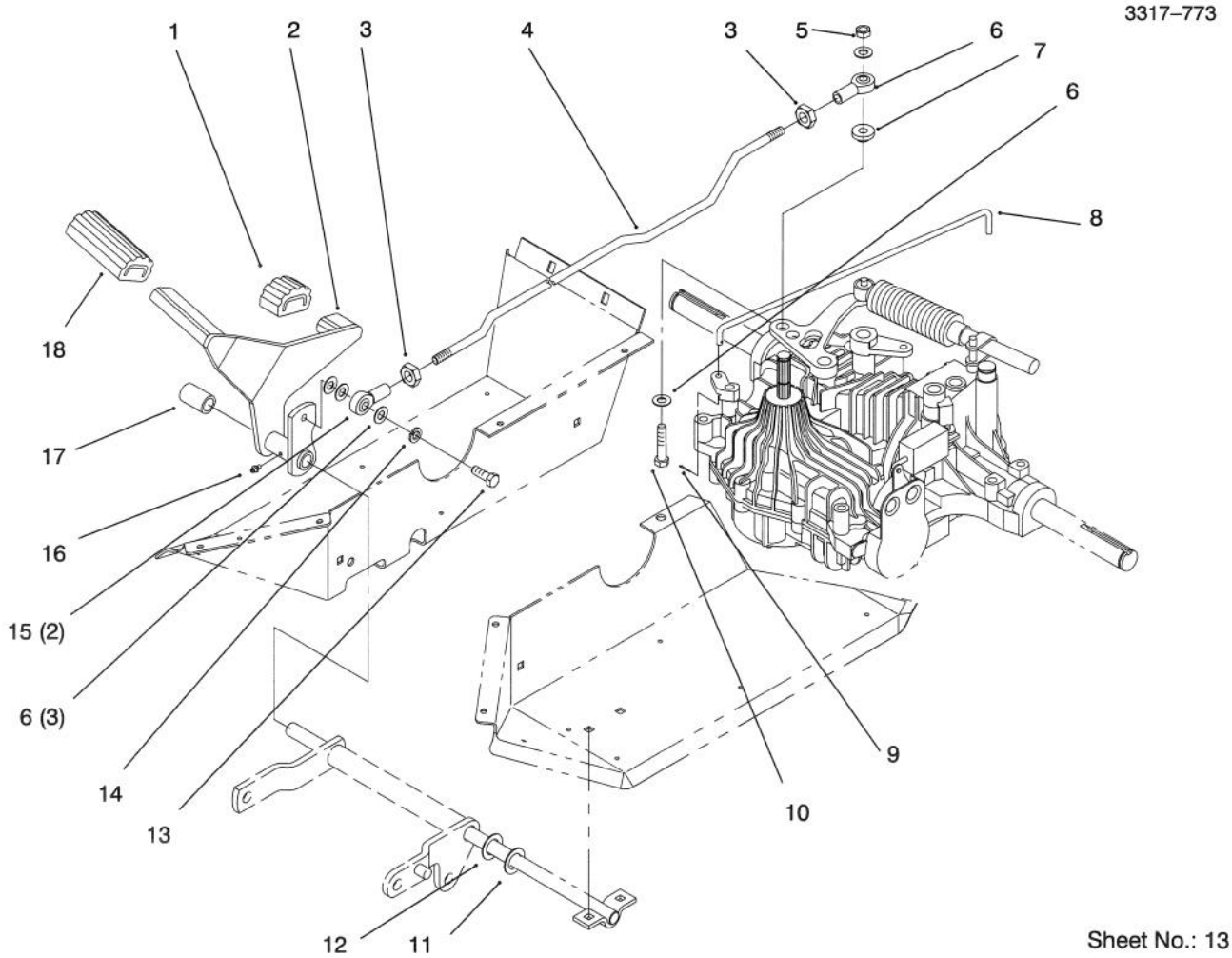

Sheet No.: 13

Hydro Control

Ref. No.	Part No.	Qty.	Description
1	92–6903	1	Pad–Pedal Reverse
2	92–6913–03	1	Pedal–Hydro
3	3220–3	2	Nut–Hex Jam
4	92–7018	1	Rod
5	3296–39	1	Nut–Lock
6	3256–24	5	Washer–Flat
7	92–6962	1	Bushing
8	92–6970	1	Rod–Bypass
9	3272–2	1	Pin–Cotter
10	323–10	1	Screw–HH
11	94–6875	1	Washer–Flat
12	9202154	1	Washer–Flat
13	323–7	1	Screw–HH
14	3253–5	1	Washer–Lock
15	92–7008	2	Rod End
16	302–26	1	Fitting–Grease
17	92–6966	1	Spacer–Hydro Pedal
18	92–6902	1	Pad–Pedal Forward

Ref. No.	Part No.	Qty.	Description

3317–773

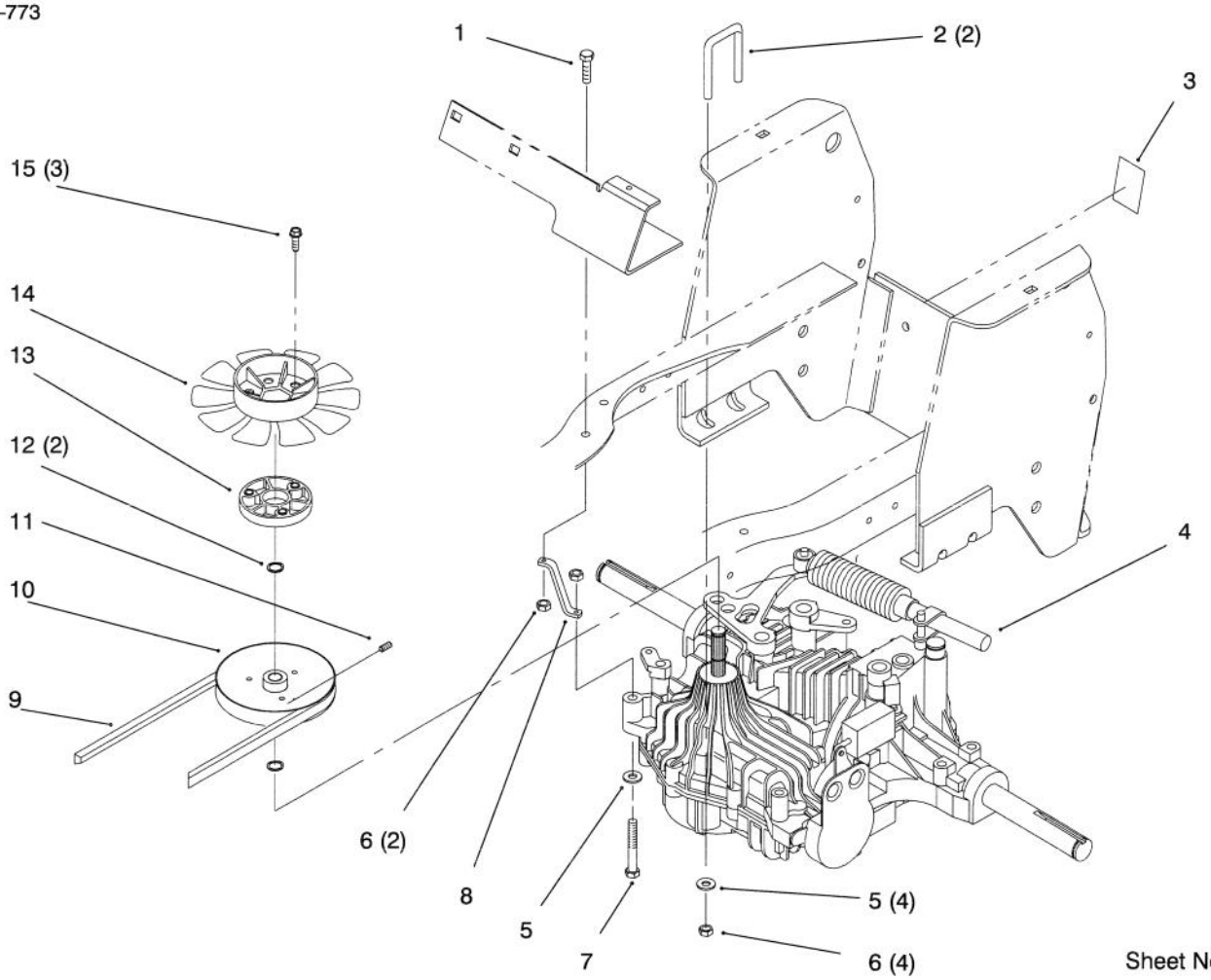

Sheet No.: 15

Hydro Transaxle

Ref. No.	Part No.	Qty.	Description
1	322–6	1	Screw–HH
2	92–6769	2	U–Bolt
3	92–6726	1	Decal–Hydro Valve (Only On: 72046)
3	92–7090	1	Decal–Bypass (Only On: 72064)
4	94–4205	1	Transaxle–Hydro
5	3256–23	5	Washer–Flat
6	3296–29	6	Nut–Lock
7	322–12	1	Screw HH
8	93–0546–03	1	Strap–Torque
9	92–6718	1	Belt–Hydro
10	92–6686	1	Pulley
11	3245–32	1	Screw–Set
12	936118	2	Snap Ring
13	92–6943	1	Spacer–Fan
14	92–6742	1	Fan
15	49–2040	3	Screw–HH

Ref. No.	Part No.	Qty.	Description

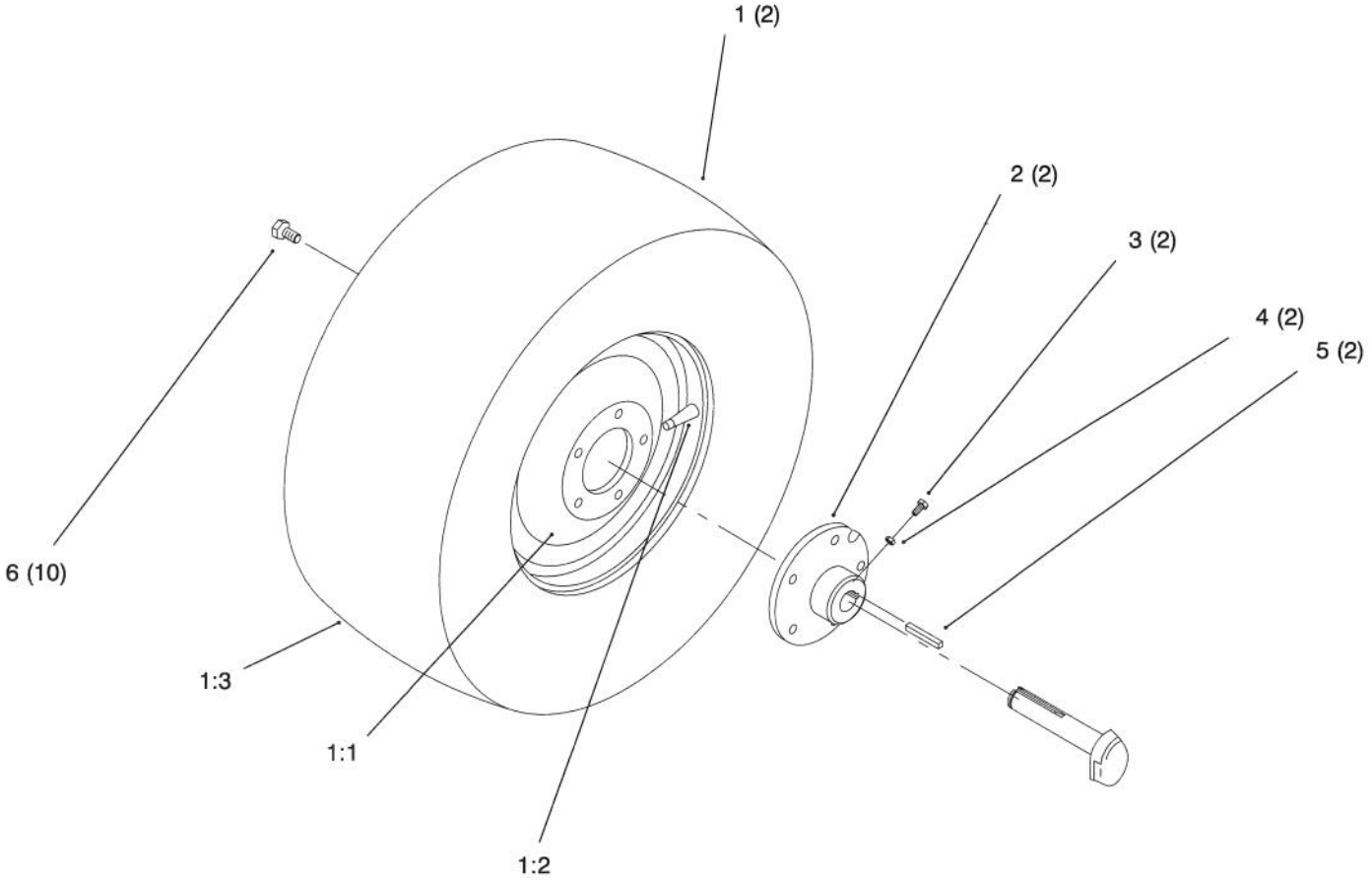

Sheet No.: 24

Rear Wheel

Ref. No.	Part No.	Qty.	Description
☆1		2	Wheel & Tire ASM
1:1	78–1221	2	Wheel
1:2	5108	2	Valve–Tire Tubeless
1:3	116744	2	Tire
2	93–3659–03	2	Hub–Wheel
3	3243–5	4	Screw–Set
4	3218–3	4	Nut–HJ
5	5–1336	2	Key
6	83–2720	10	Bolt–Lug

Ref. No.	Part No.	Qty.	Description

☆ Not serviced

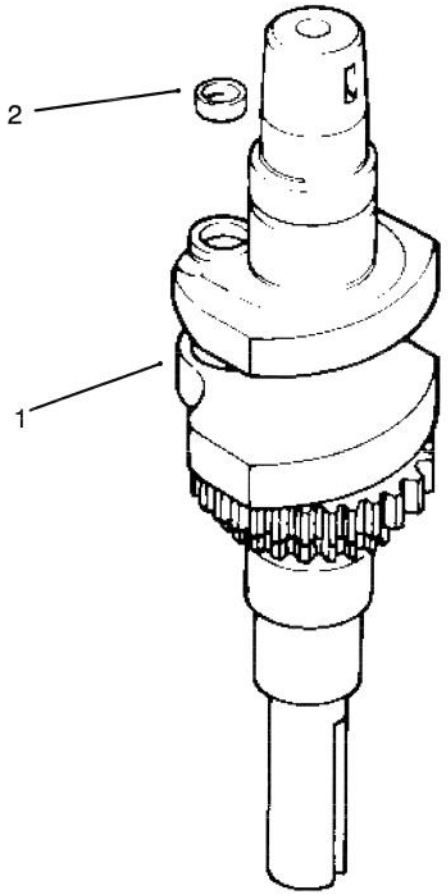

Sheet No.: 101
C–1948

Crankshaft

Ref. No.	Part No.	Qty.	Description
1	12 014 02	1	Crankshaft
2	12 139 01	1	Plug–Cup

Ref. No.	Part No.	Qty.	Description

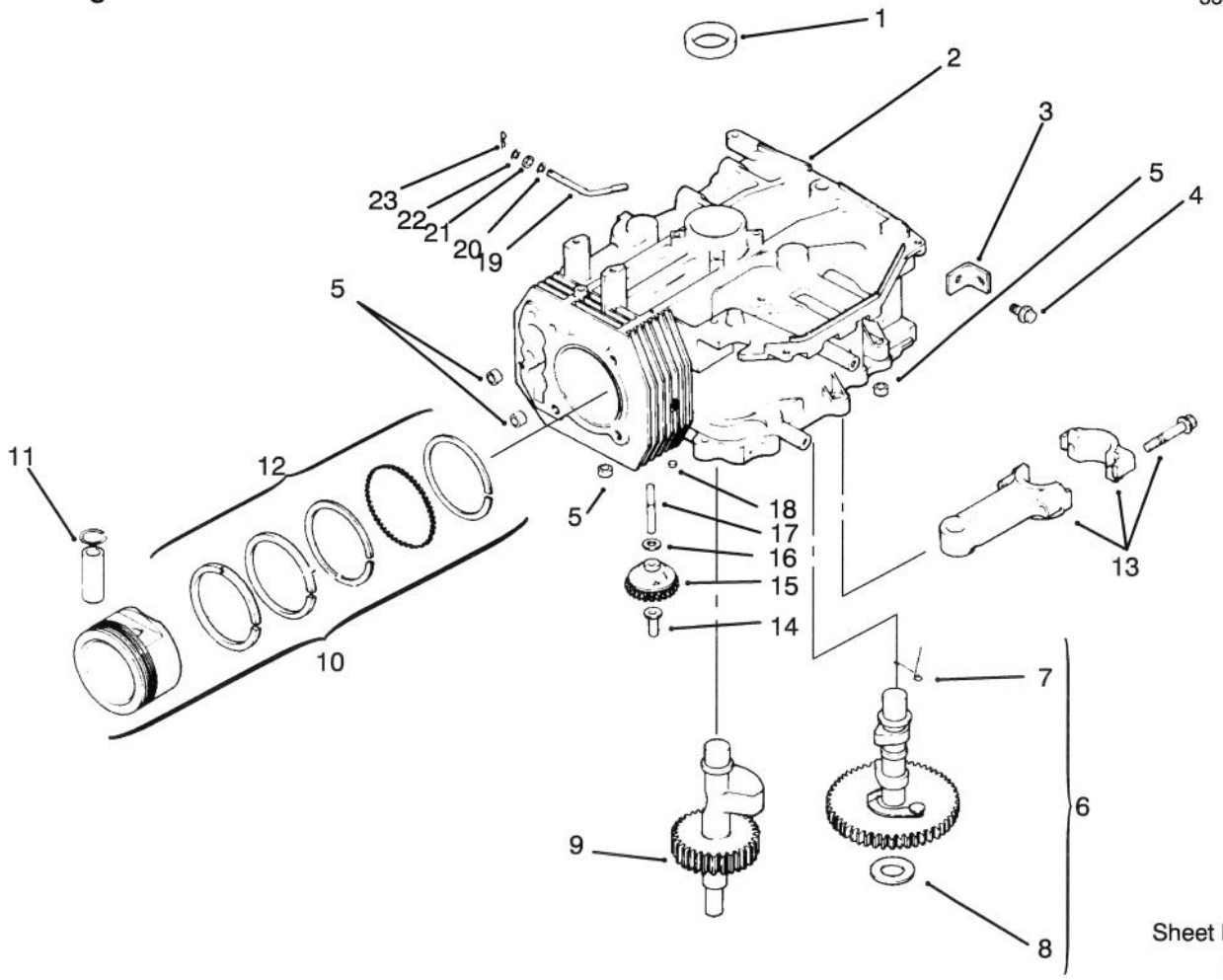

Sheet No.: 102
C–1949

Crankcase

Ref. No.	Part No.	Qty.	Description
1	12 032 03	1	Seal–Crankshaft
*2	12 522 19	1	Block–Short
3	12 445 02	1	Strap–Lifting
4	M–0839025	1	Screw M8x1.25x22
5	12 380 03	4	Dowel–Locating
6	12 010 02	1	Camshaft ASM Incl 7
†7	12 089 18	1	Spring–Actuating
†8	12 422 07	1	Shim–Camshaft A/R
†8	12 422 08	1	Shim–Camshaft A/R
†8	12 422 09	1	Shim–Camshaft A/R
†8	12 422 10	1	Shim–Camshaft A/R
†8	12 422 11	1	Shim–Camshaft A/R
†8	12 422 12	1	Shim–Camshaft A/R
†8	12 422 13	1	Shim–Camshaft A/R
9	12 144 19	1	Shaft–Balance
10	12 874 07	1	Piston ASM STD Incl 11–2
10	12 874 08	1	Piston ASM .25 Incl 11–2
10	12 874 09	1	Piston ASM .50 Incl 11–2
†11	12 018 02	2	Retainer–Piston Pin
12	12 018 07	1	Ring Set STD
12	12 018 08	1	Ring Set .25
12	12 018 09	1	Ring Set .50
13	12 067 01	1	Connecting Rod STD

Ref. No.	Part No.	Qty.	Description
13	12 067 02	1	Connecting Rod .25
14	12 380 01	1	Pin–Governor Regulating
15	12 043 05	1	Gear–Governor ASM
16	M–0631005	1	Washer–Governor
17	12 144 02	1	Shaft–Governor Gear
18	52 139 09	1	Plug–Cup
19	12 144 01	1	Shaft–Governor Cross
20	Sm–0631015	1	Washer–Governor Shaft
21	12 032 01	1	Seal–Governor Shaft
22	X–25–102	1	Washer–Flat
23	12 380 04	1	Pin–Governor Hitch
*	12 722 59	1	Gasket Set

* Not illustrated
† Included in a service kit or in an assembly

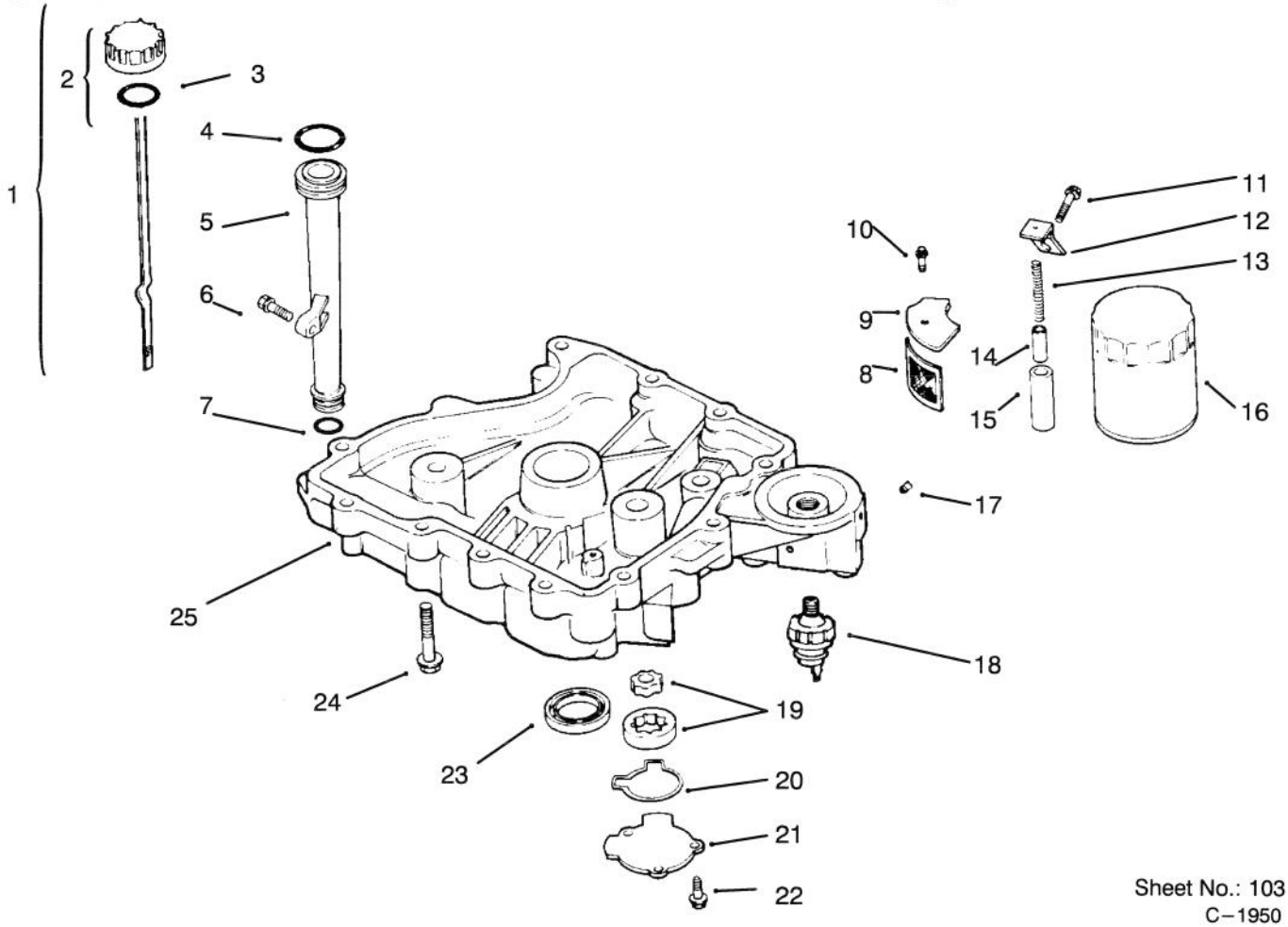

Sheet No.: 103
C–1950

Oil Pan / Lubrication

Ref. No.	Part No.	Qty.	Description
1	12 038 01	1	Dipstick Incl 2–3
†2	25 755 13	1	Kit–Oil Cap Incl 3
†3	12 153 03	1	O Ring–Fill Cap
4	12 153 02	1	O Ring–Upper Fill Tube
5	12 123 04	1	Tube–Oil Fill
6	Sm–0545020	1	Screw M5x0.8x20
7	12 153 01	1	O Ring–Lower Fill Tube
8	12 162 02	1	Screen–Oil Pickup
9	12 096 03	1	Cover–Oil Pickup Screen
10	M–0545016	1	Screw M5x0.8x16
11	M–1039025	1	Screw M10x1.5x25
12	12 126 02	1	Bracket–Oil Pump Relief
13	12 089 03	1	Spring–Oil Relief Valve
14	12 462 01	1	Piston–Oil Relief Valve
15	12 208 01	1	Body–Oil Relief Valve
16	12 050 01	1	Filter–Oil
17	X–75–10	2	Plug–SH 3/8 NPTF
18	52 099 06	1	Switch–Oil Pressure
19	12 393 01	1	Pump–Oil
20	12 032 04	1	O Ring–Oil Pump Cover
21	12 096 02	1	Cover–Oil Pump

Ref. No.	Part No.	Qty.	Description
22	M–0545016	3	Screw M5x0.8x16
23	12 032 03	1	Seal–Crankshaft
24	Sm–0838045	12	Screw M8x1.25x45
25	12 199 09	1	Pan–Oil
*	52 518 21	1	Lead–Oil Switch W/Tabs

† Included in a service kit or in an assembly
* Not illustrated

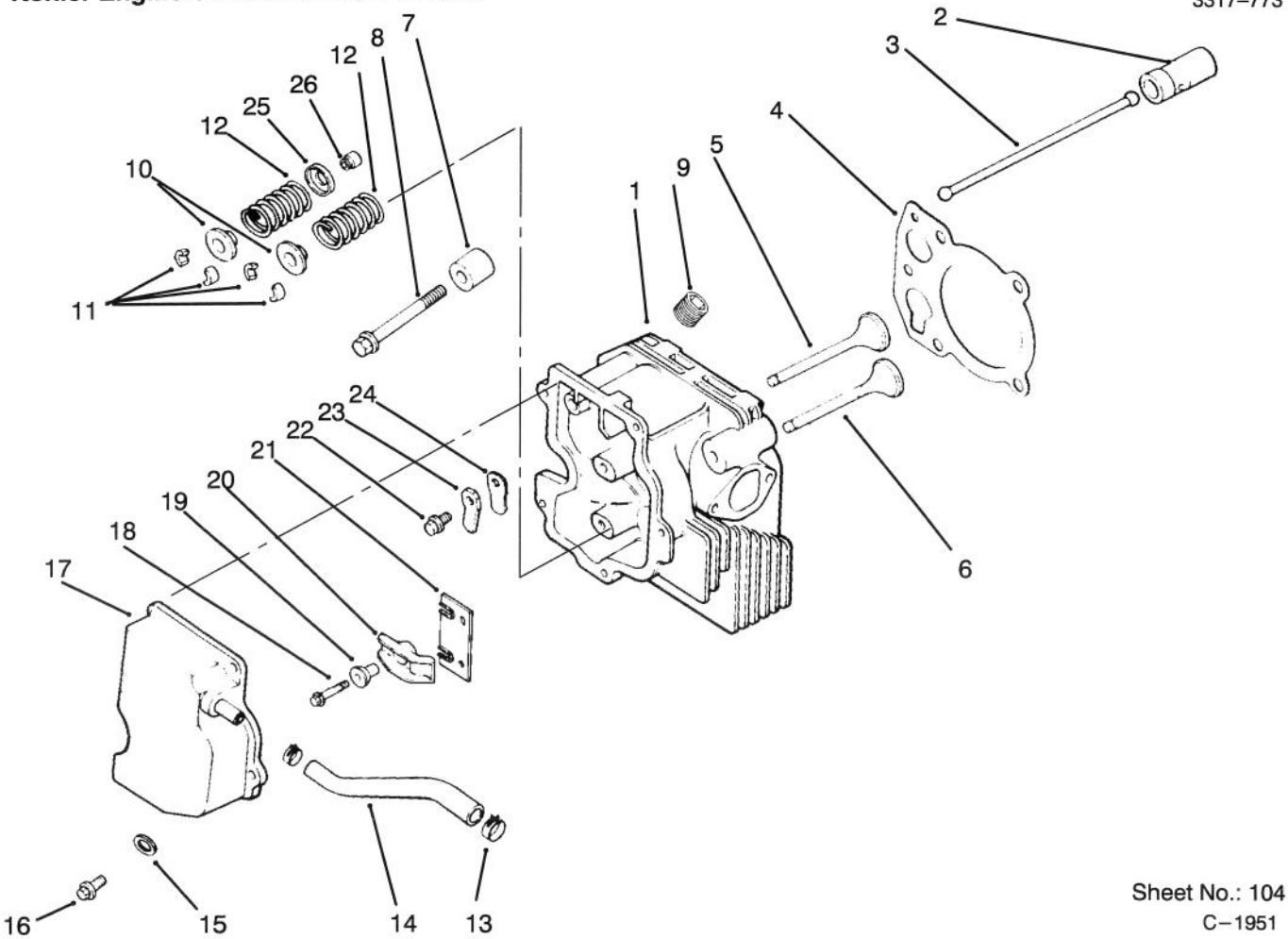

Sheet No.: 104
C–1951

Cylinder Head / Valve / Breather

Ref. No.	Part No.	Qty.	Description
1	12 318 09	1	Cylinder Head
2	12 351 01	2	Lifter–Valve
3	12 411 01	2	Rod–Push
4	12 041 08	1	Gasket–Cylinder Head
5	12 017 01	1	Valve–Intake STD
5	12 017 02	1	Valve–Intake .25
6	12 016 01	1	Valve–Exhaust STD
6	12 016 02	1	Valve–Exhaust .25
7	12 112 13	1	Spacer–Head Bolt Exhaust
8	12 086 15	5	Screw M10x1.5x80
9	X–75–23	1	Plug
10	12 173 01	2	Cap–Valve Spring
11	12 755 03	2	Kit–Retainer
12	12 089 01	2	Spring–Valve
13	X–426–9	2	Clamp–Hose
14	12 326 03	1	Hose–Breather
15	12 468 05	1	Washer–Flat
16	Sm–0645020	5	Screw M6x1.0x20
17	12 096 07	1	Cover–Valve W/Nipple
18	M–0640034	2	Screw M6x1.0x34
19	24 194 01	2	Ball–Rocker Pivot
20	24 186 01	2	Arm–Rocker
21	12 146 13	1	Plate–Guide
22	M–0545010	1	Screw M5x0.8x10

Ref. No.	Part No.	Qty.	Description
23	12 018 01	1	Retainer–Breather Reed
24	24 402 02	1	Reed–Breather
25	235011	2	Retainer–Spring
26	24 032 05	2	Seal–Valve Stem
*	12 755 60	1	Kit–Cylinder Head Incl 1–6 & 18–21

* Not illustrated

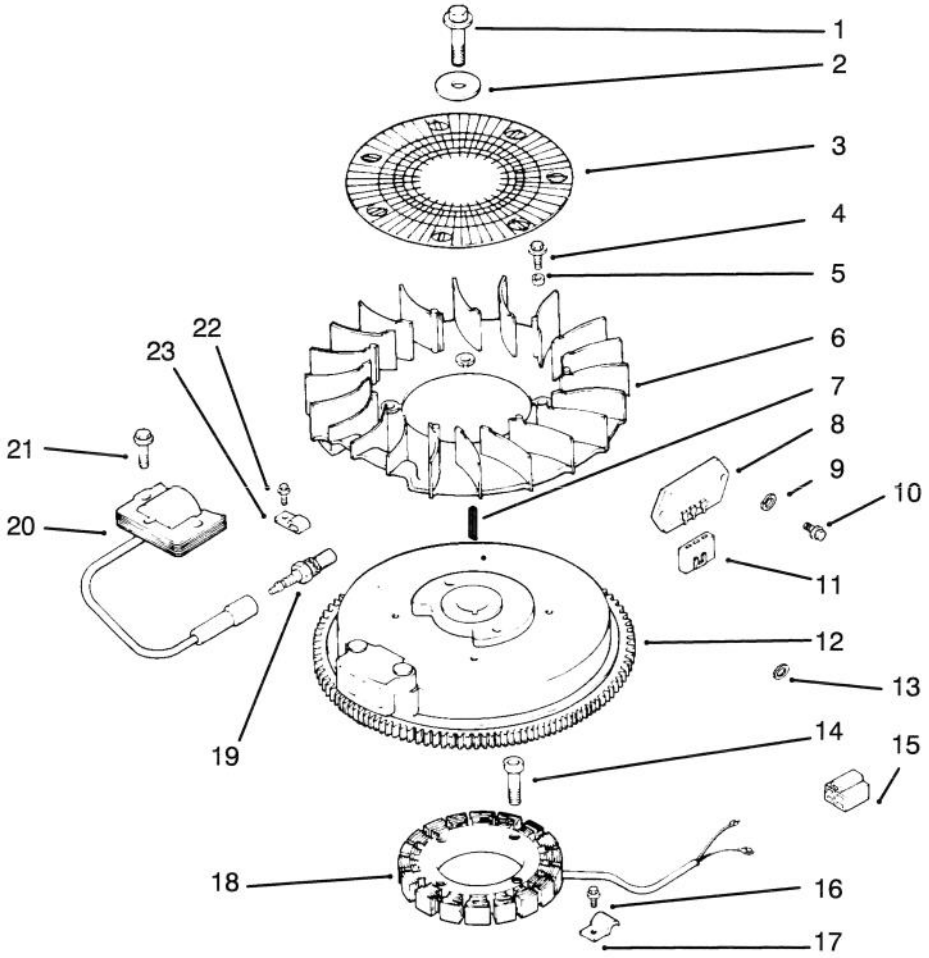

Sheet No.: 105
C–1952

Ignition / Electrical

Ref. No.	Part No.	Qty.	Description
1	12 086 14	1	Screw–Flywheel Mounting
2	12 468 03	1	Washer–Flywheel Screw
3	24 162 03	1	Screen–Grass
4	M–0639016	4	Screw M6x1.0x16
5	12 112 01	4	Spacer–Fan
6	12 157 02	1	Fan
7	X–42–15	1	Key
8	41 403 09	1	Rectifier–Regulator
9	X–22–11	1	Washer–Lock
10	M–0639016	2	Screw M6x1.0x16
11	236602	1	Connector–Regulator
12	12 025 16	1	Flywheel ASM
13	X–25–5	1	Washer–Flat
14	M–0548025	4	Screw M5x0.8x25
15	48 155 01	1	Connector–5 Contact
16	M–0545010	1	Screw M5x0.8x10
17	12 154 02	1	Clip–Stator Harness
18	24 085 01	1	Stator–15 Amp
19	12 132 02	1	Spark Plug
20	12 584 01	1	Module–Ignition
21	Sm–0545020	2	Screw M5x0.8x20
22	M–0545010	1	Screw M5x0.8x10
23	X–728–1	1	Clip–Kill Lead
*	12 518 01	1	Lead–White

Ref. No.	Part No.	Qty.	Description
*	25 518 05	1	Lead–Black
*	25 518 29	1	Lead–Black

* Not illustrated

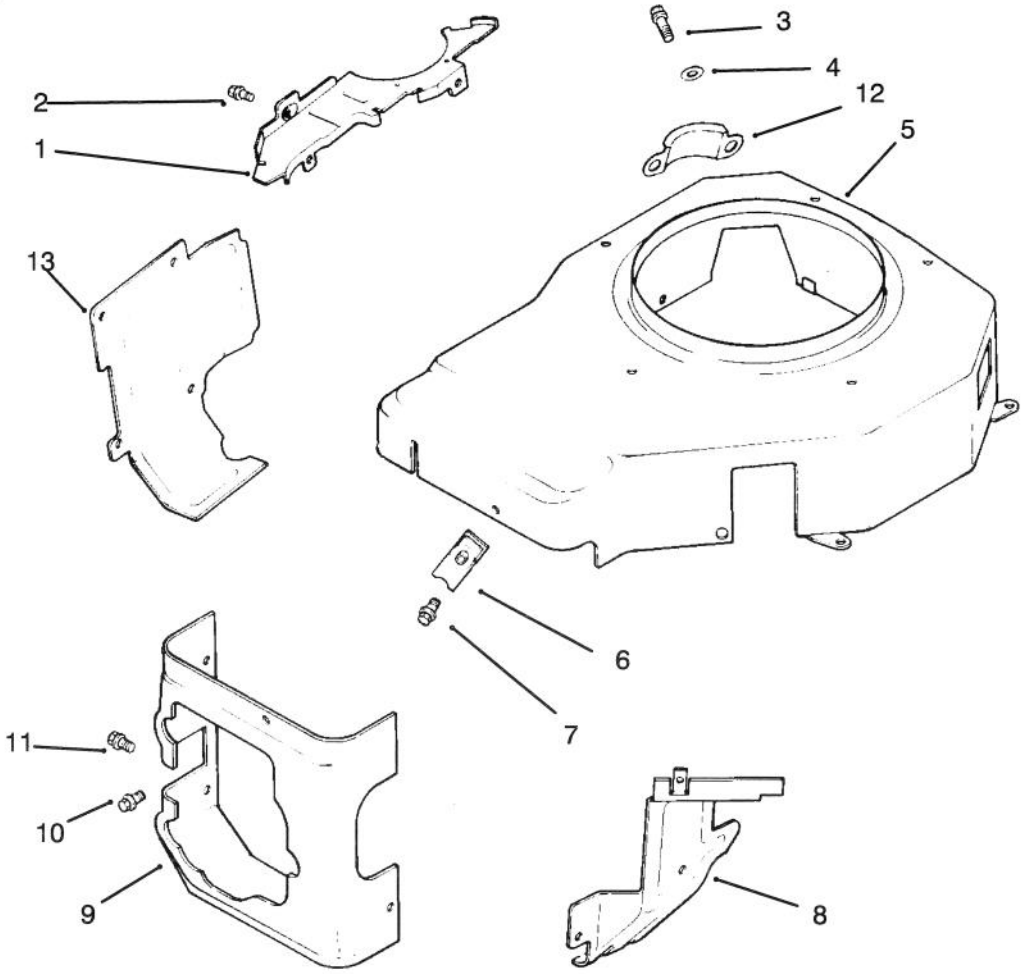

Sheet No.: 106
C–1953

Blower Housing & Baffles

Ref. No.	Part No.	Qty.	Description
1	12 146 07	1	Plate–Blower Housing
2	M–0545010	8	Screw M5x0.8x10
3	24 086 18	2	Screw
4	X–25–92	2	Washer–Flat
5	12 027 32	1	Housing–Blower
6	25 154 02	3	Clip
7	Sm–0545020	3	Screw M5x0.8x20
8	12 063 05	1	Baffle–Carburetor
9	12 063 08	1	Baffle–Cylinder Head
10	M–0645016	2	Screw–HH M6x1.0x16
11	M–0645020	1	Screw–HH M6x1.0x20
12	24 096 05	1	Cover–Pinion
13	12 063 01	1	Baffle–Cylinder Barrel

Ref. No.	Part No.	Qty.	Description

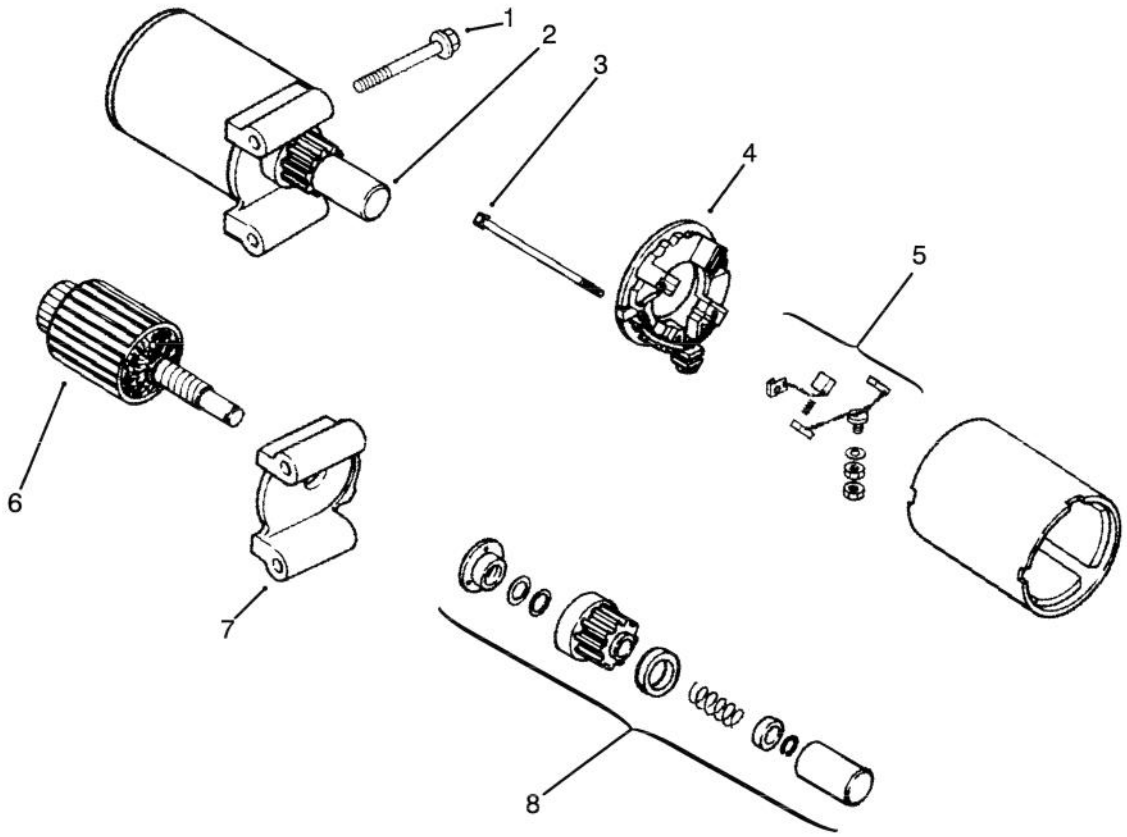

Sheet No.: 107
C–

Starting System

Ref. No.	Part No.	Qty.	Description
1	M0839070	2	Screw M8x1.25x70
2	12 098 13	1	Starter ASM Incl 3–8
†3	12 086 25	1	Screw–HF
†4	12 227 11	1	Cap–Commutator Incl 5
†5	82 755 28	1	Kit–Brush And Spring
†6	12 170 03	1	Armature–Starter
†7	12 227 05	1	Cap–Drive End
†8	12 755 53	1	Kit–Drive
*	52 357 01	1	Lubricant–Starter

Ref. No.	Part No.	Qty.	Description

† Included in a service kit or in an assembly
* Not illustrated

3317–773

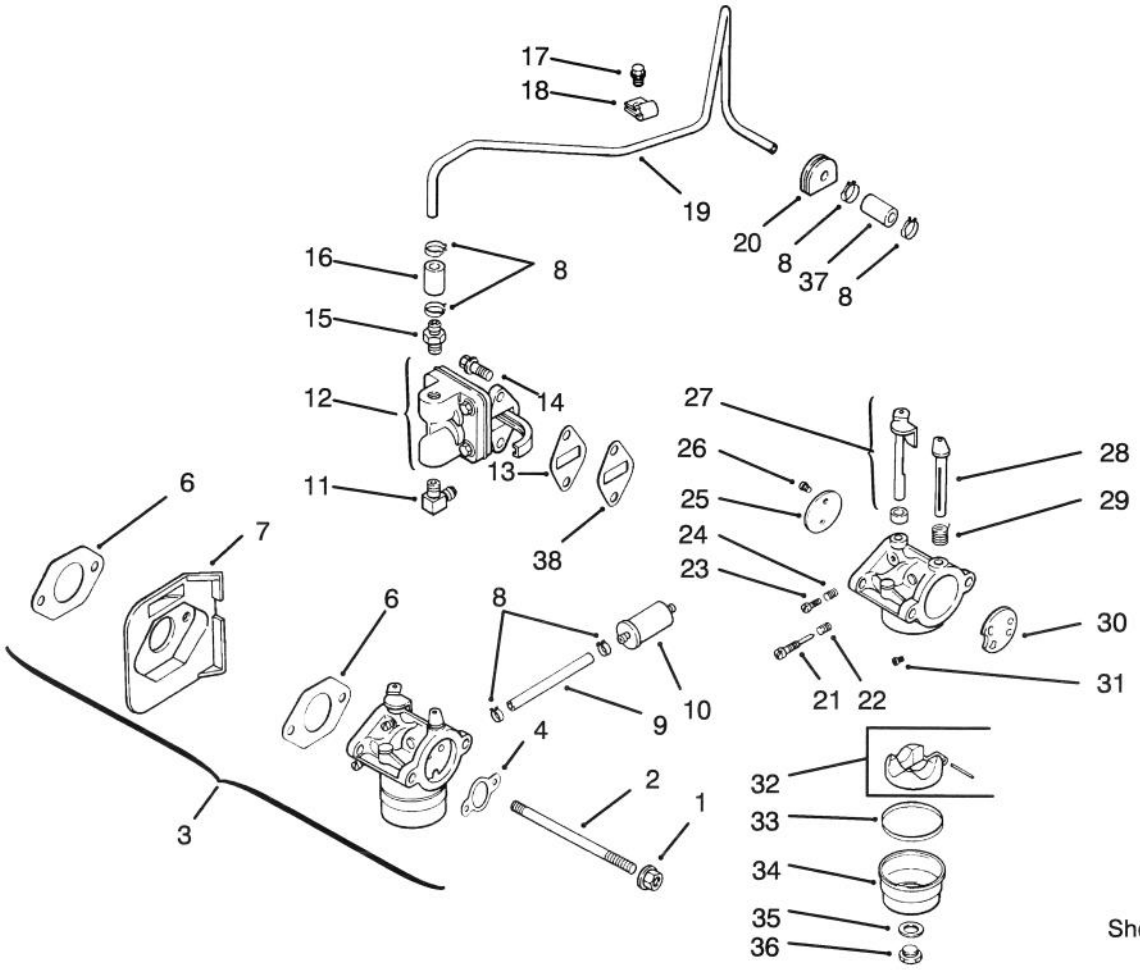

Sheet No.: 108
C–

Fuel System

Ref. No.	Part No.	Qty.	Description
1	Sm–0641060	2	Nut M6x1.0
2	M–0629122	2	Stud M6x1.0x110
3		1	Kit–Carburator W/Gasket Incl 4–6
†4	12 041 02	1	Gasket–Air Cleaner
†5	12 053 57	1	Carurator ASM Incl 21–36
†6	12 041 01	2	Gasket–Carburetor
7	12 265 04	1	Deflector–Heat
8	X–426–9	1	Clamp–Hose
9	12 353 10	1	Line–Fuel
10	25 050 02	1	Filter–Fuel
11	25 155 02	1	Connector–90 DEG
12	12 559 01	1	Kit–Pump Incl 13–14
†13	25 041 09	1	Gasket–Fuel Pump
†14	M–0645020	2	Screw–HH M6x1.0x20
15	X–380–1	1	Connector–Straight
16	12 353 01	1	Line–Fuel 1.25 Inch
17	Sm–0545010	1	Screw M5x0.8x10
18	12 154 01	1	Clamp–Fuel Line
19	12 123 19	1	Line–Fuel
20	12 313 01	1	Grommet
†21	12 368 05	1	Needle–Idle Fuel Adjust
†22	12 089 09	1	Spring–Idle Fuel

Ref. No.	Part No.	Qty.	Description
†23	12 086 04	1	Screw–Idle Speed Adjust
†24	12 089 09	1	Spring–Idle Fuel
†25	12 146 03	1	Plate–Throttle
†26	25 086 27	1	Screw–Throttle Plate
†27	12 144 09	1	Shaft–W/Lever & Seal
†28	12 144 08	1	Shaft–Choke
†29	12 089 10	1	Spring–Choke Return
†30	12 146 02	1	Plate–Choke
†31	12 337 03	1	Jet–Main
†32	12 757 02	1	Kit–Float
†33	12 041 05	1	Gasket–Bowl
†34	12 104 01	1	Bowl–Fuel
†35	12 041 06	1	Gasket–Bowl Screw
†36	12 086 05	1	Screw–Fuel Bowl
37	25 353 02	1	Line–Fuel 3"
38	12 112 05	1	Spacer–Fuel Pump
*	12 041 01	1	Gasket–Carburetor
*	12 757 01	1	Kit–Carburetor Repair

† Included in a service kit or in an assembly
* Not illustrated

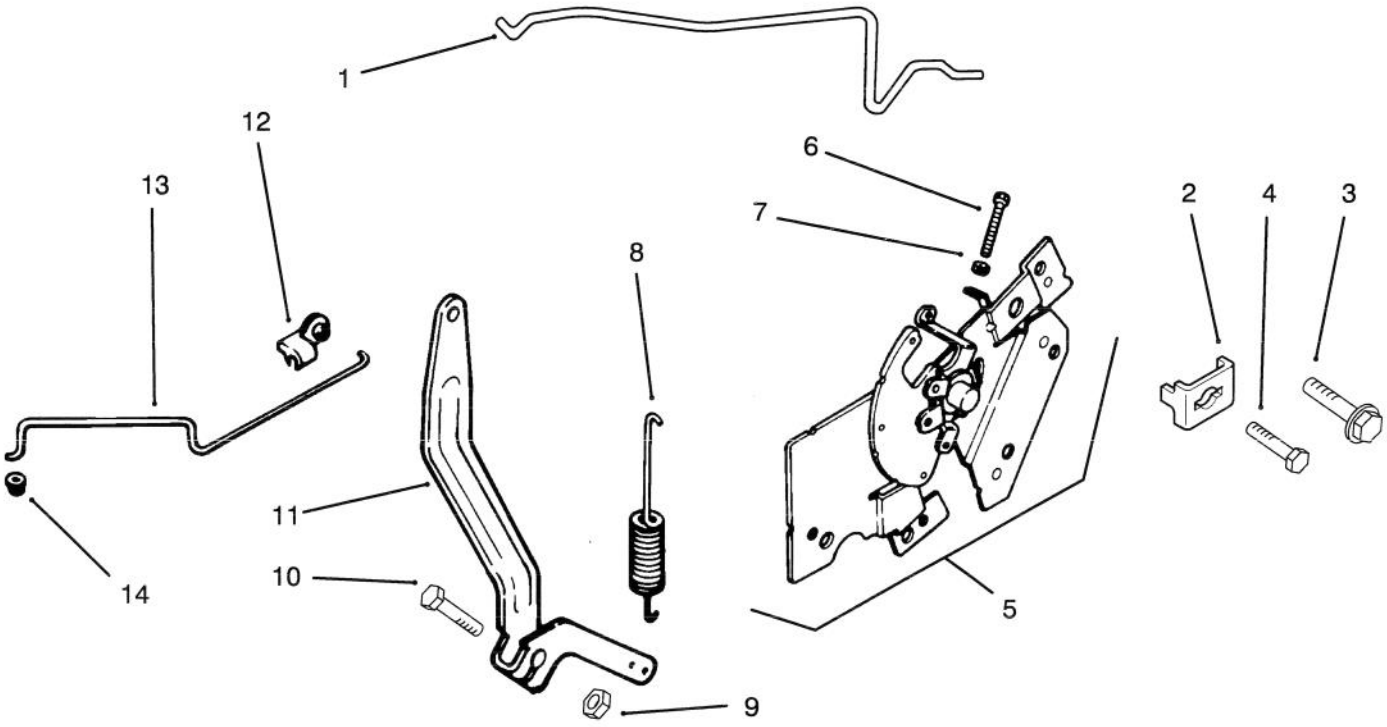

Sheet No.: 109
C–1956

Engine Controls

Ref. No.	Part No.	Qty.	Description
1	12 079 07	1	Linkage–Choke
2	12 237 01	2	Clamp–Cable
3	M–0645016	2	Screw–HH M6x1.0x16
4	M–0545016	2	Screw M5x0.8x16
5	12 536 02	1	Control–ASM Incl 6–7
†6	M–0401030	1	Screw–HHF M4x0.7x28
†7	M–0446030	1	Nut–Hex M4x0.7
8	52 089 07	1	Spring–Governor
9	M–0641060	1	Nut M6x1.0
10	Sm–0642025	1	Screw M6x1.0x25
11	12 090 05	1	Lever–Governor
12	25 158 11	1	Bushing–Linkage
13	12 079 01	1	Linkage–Throttle
14	25 158 08	1	Bushing–Linkage

Ref. No.	Part No.	Qty.	Description

† Included in a service kit or in an assembly

3317–773

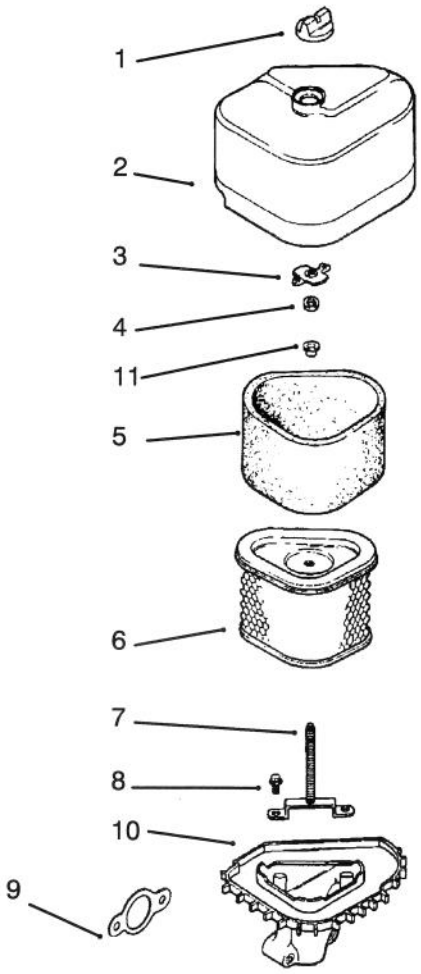

Sheet No.: 110
C–

Air Intake / Filtration

Ref. No.	Part No.	Qty.	Description
1	12 341 02	1	Knob–Air Cleaner Cover
2	12 096 24	1	Cover–Air Cleaner
3	12 100 01	1	Nut–Wing
4	X–25–63	1	Washer–Flat
5	12 083 05	1	Element–Air Cleaner Incl 11
6	12 083 08	1	Precleaner–Element
7	12 072 05	1	Stud–Mounting Plate
8	12 086 01	1	Screw–Mounting Plate
9	12 041 02	1	Gasket–Air Cleaner
10	12 094 05	1	Base–Air Cleaner Incl 7
11	12 313 04	1	Grommet
*	12 113 04	1	Decal–Air Cleaner
*	12 743 04	1	Kit–Air Cleaner Incl 1–11

Ref. No.	Part No.	Qty.	Description

* Not illustrated

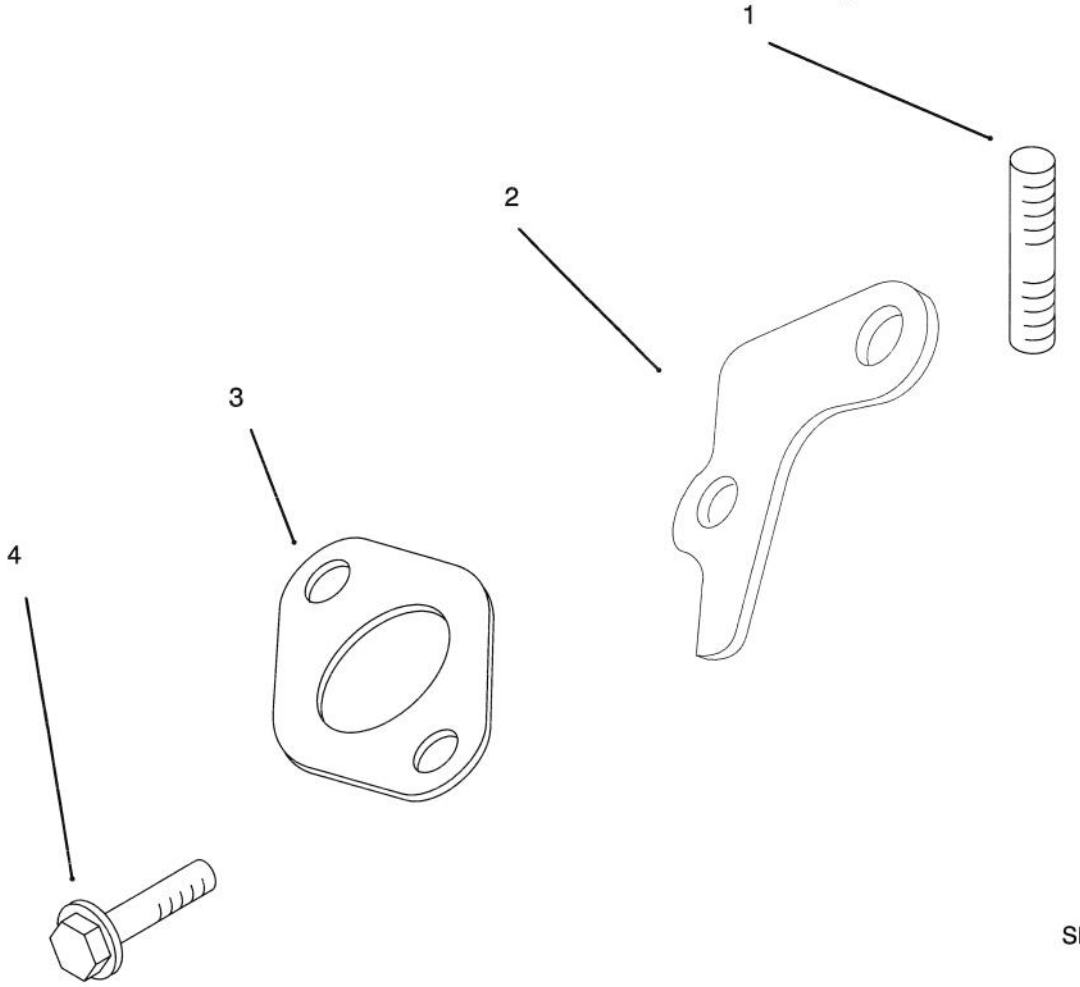

Sheet No.: 111
C–

Exhaust

Ref. No.	Part No.	Qty.	Description
1	M–0829033	2	Stud M8x1.25x20
2	12 455 06	1	Strap–Lifting
3	12 041 03	1	Gasket–Exhaust Manifold
4	M–0645025	1	Screw–Valve Cover

Ref. No.	Part No.	Qty.	Description

3317–773

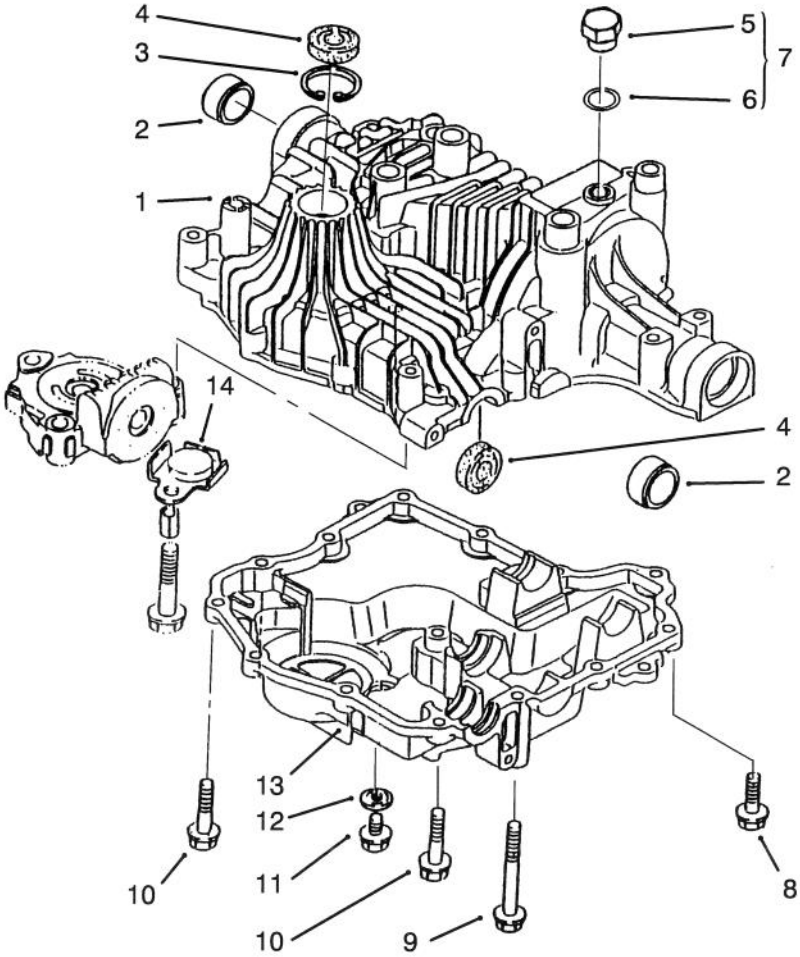

Sheet No.: 401

c–1860

Transaxle Case

Ref. No.	Part No.	Qty.	Description
1	94–4206	1	Upper Case ASM Incl 2–6
†2		2	Bushing
†3	93–0360	1	Ring
†4	93–0361	2	Seal
†5		1	Plug
†6		1	Packing
7	93–0356	1	Plug/Packing Incl 5–6
8	93–0363	11	Screw–TAP
9	93–0354	1	Bolt
10	93–0364	2	Screw–TAP
11	93–0362	1	Bolt
13	94–4207	1	Case–Lower
14	93–0355	1	Magnet

Ref. No.	Part No.	Qty.	Description

† Included in a service kit or in an assembly

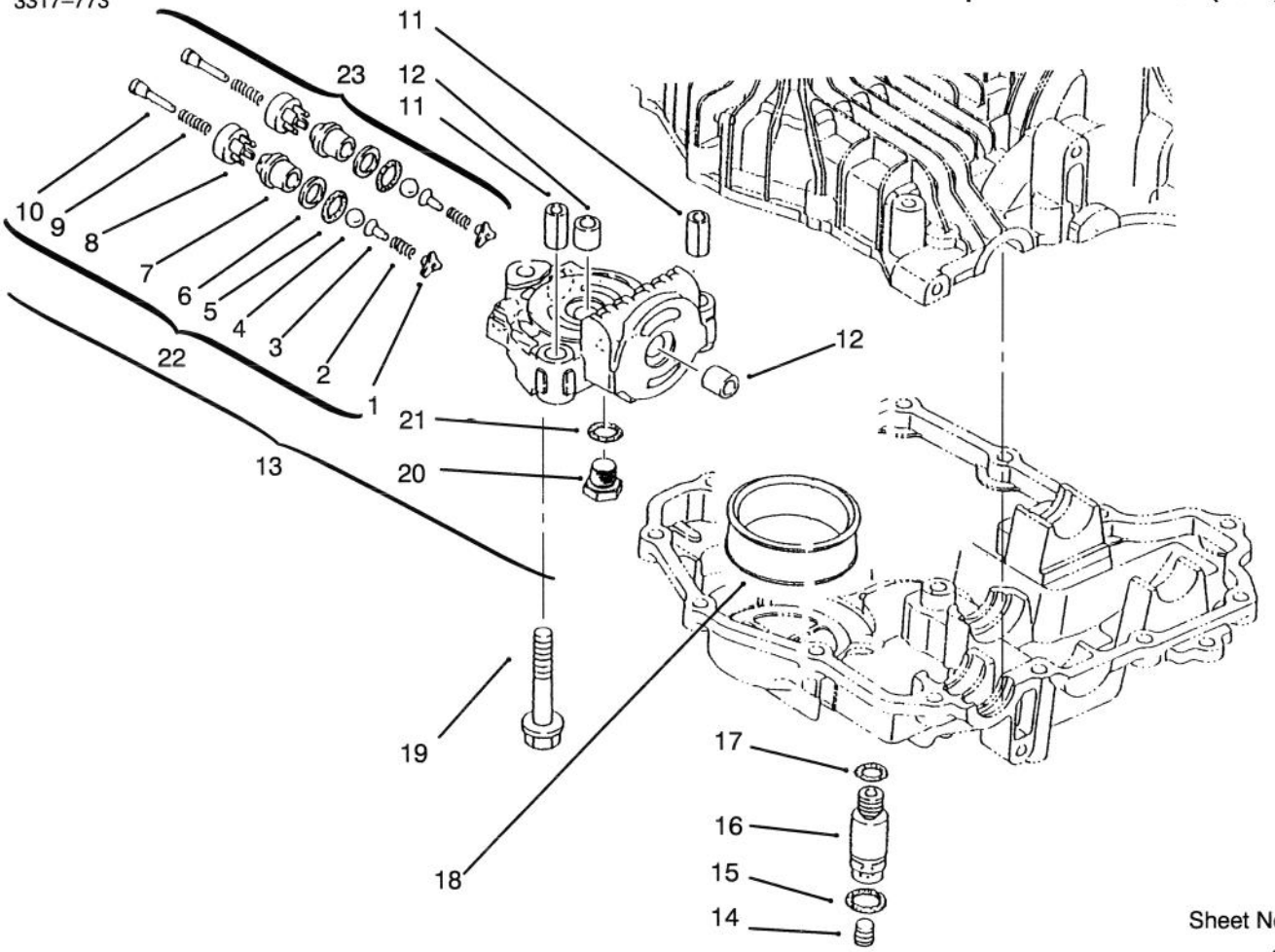

Sheet No.: 402

c–1877

Center Case

Ref. No.	Part No.	Qty.	Description
†1	93–0461	2	Holder–Bypass
†2		2	Spring
†3		2	Holder–Ball
†4		1	Ball
†5	93–0465	2	Packing
†6	93–0466	2	Ring–Back Up
†7		1	Sleeve A1
†8		2	Valve B
†9		2	Spring
†10		2	Pin–Push
†11	93–0471	2	Pin–Knock
†12	93–0472	2	Bushing
13	93–0484	1	Case Incl 11–12 & 20–23
14	93–0474	1	Plug
15	93–0475	1	Packing
16	93–0476	1	Connector
17	93–0481	1	Packing
18	93–0478	1	Filter
19	93–0479	3	Bolt
20	93–0480	1	Plug
21	93–0481	1	Packing
22	93–0482	1	Valve ASM A1 Incl 1–10
23	93–0483	1	Valve ASM A2

Ref. No.	Part No.	Qty.	Description

† Included in a service kit or in an assembly

3317–773

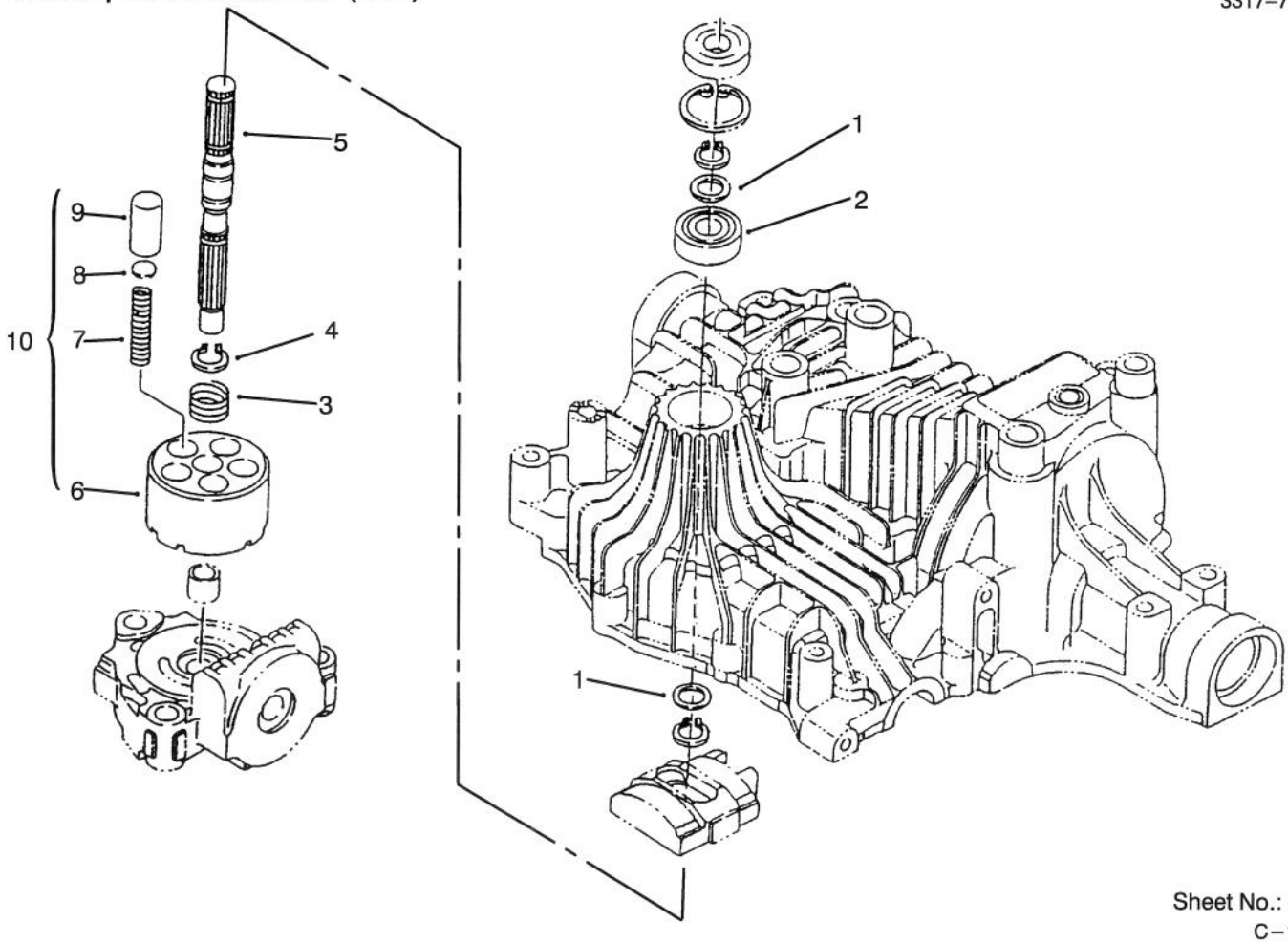

Sheet No.: 403
C–1861

Pump Shaft

Ref. No.	Part No.	Qty.	Description
1	93–0371	2	Washer
2	93–0374	1	Bearing–Ball
3	93–0370	1	Spring
4	93–0373	3	Ring–Snap
5	93–0372	1	Shaft–Pump
†6		1	Block–Cylinder
†7		5	Spring
†8		5	Washer
†9		5	Piston
10	93–0365	1	Cylinder ASM Incl 6–9

Ref. No.	Part No.	Qty.	Description

† Included in a service kit or in an assembly

3317–773

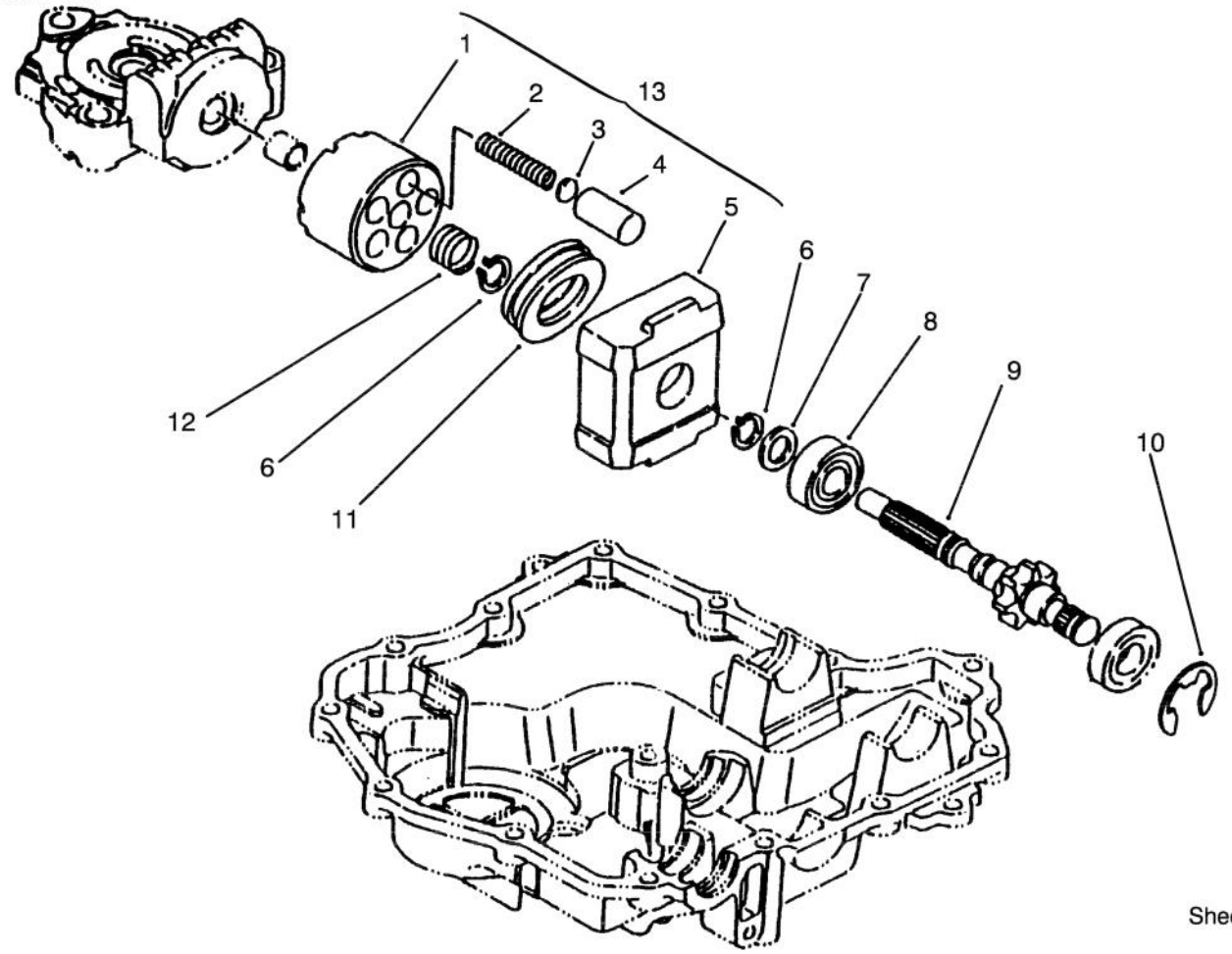

Sheet No.: 404
c–1862

Motor Shaft

Ref. No.	Part No.	Qty.	Description
1		1	Block–Cylinder
2		1	Spring
3		5	Washer
4		5	Piston
5	93–0375	1	Housing
6	93–0373	2	Ring–Snap
7	93–0371	1	Washer
8	93–0374	1	Bearing–Ball
9	93–0386	1	Shaft–Motor
10	93–0387	1	E Ring
11	93–0376	1	Bearing–Thrust
12		1	Spring
13	93–0365	1	Cylinder ASM Incl 1–5

Ref. No.	Part No.	Qty.	Description

3317–773

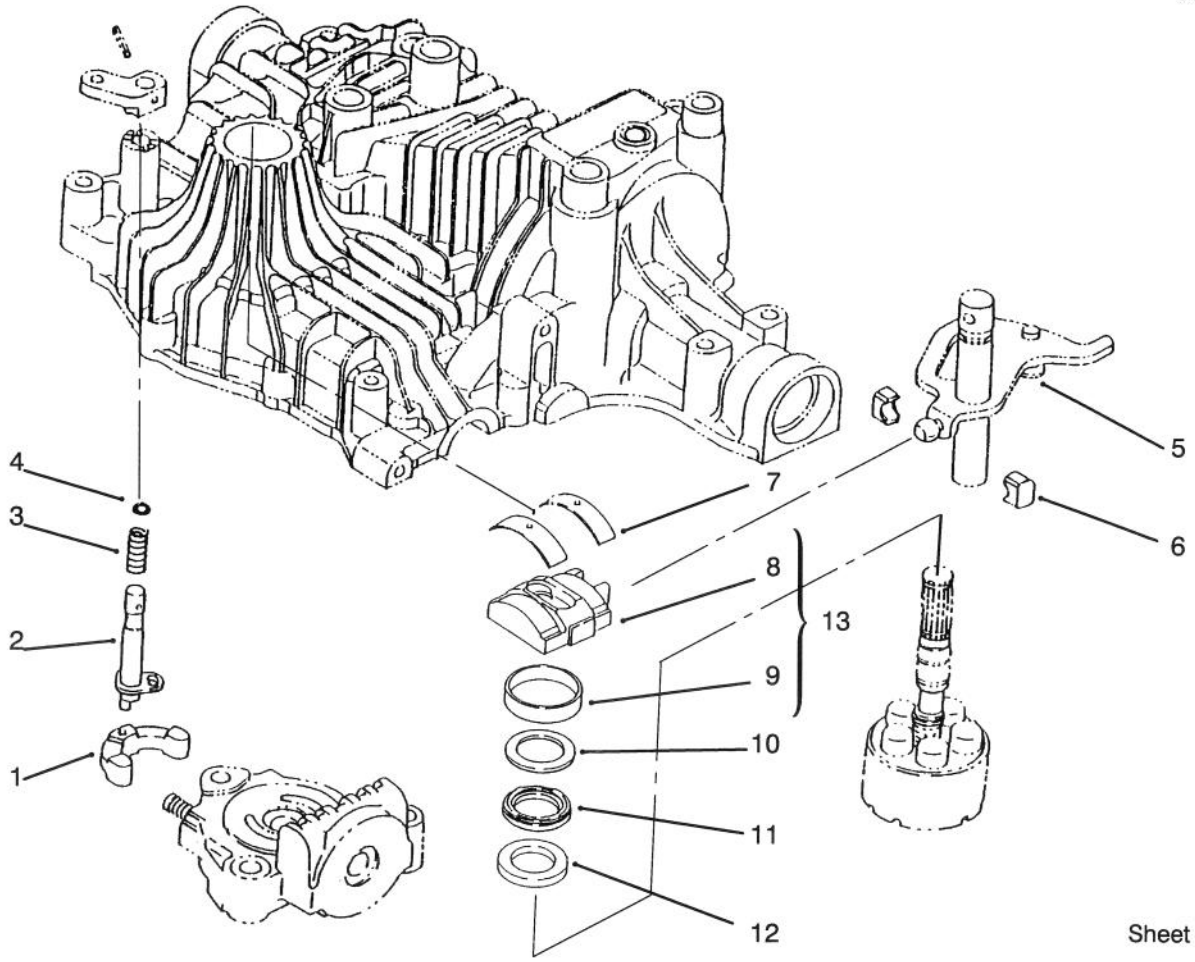

Sheet No.: 405

c–1863

Range Shift

Ref. No.	Part No.	Qty.	Description
1	93–0395	1	Arm
2	93–0397	1	Shaft–Bypass
3	93–0396	1	Spring
4	93–0400	1	Packing
5	93–0398	1	Block Set Incl 6
†6		1	Block–Shift
7	93–0388	2	Thrust Metal
†8		1	Plate–Swash
†9		1	Bushing–Swashplate
10	93–0394	1	Plate–Thrust
11	93–0392	1	Bearing
12	93–0393	1	Plate–Thrust
13	93–0389	1	Swash Plate Incl 8–9

Ref. No.	Part No.	Qty.	Description

† Included in a service kit or in an assembly

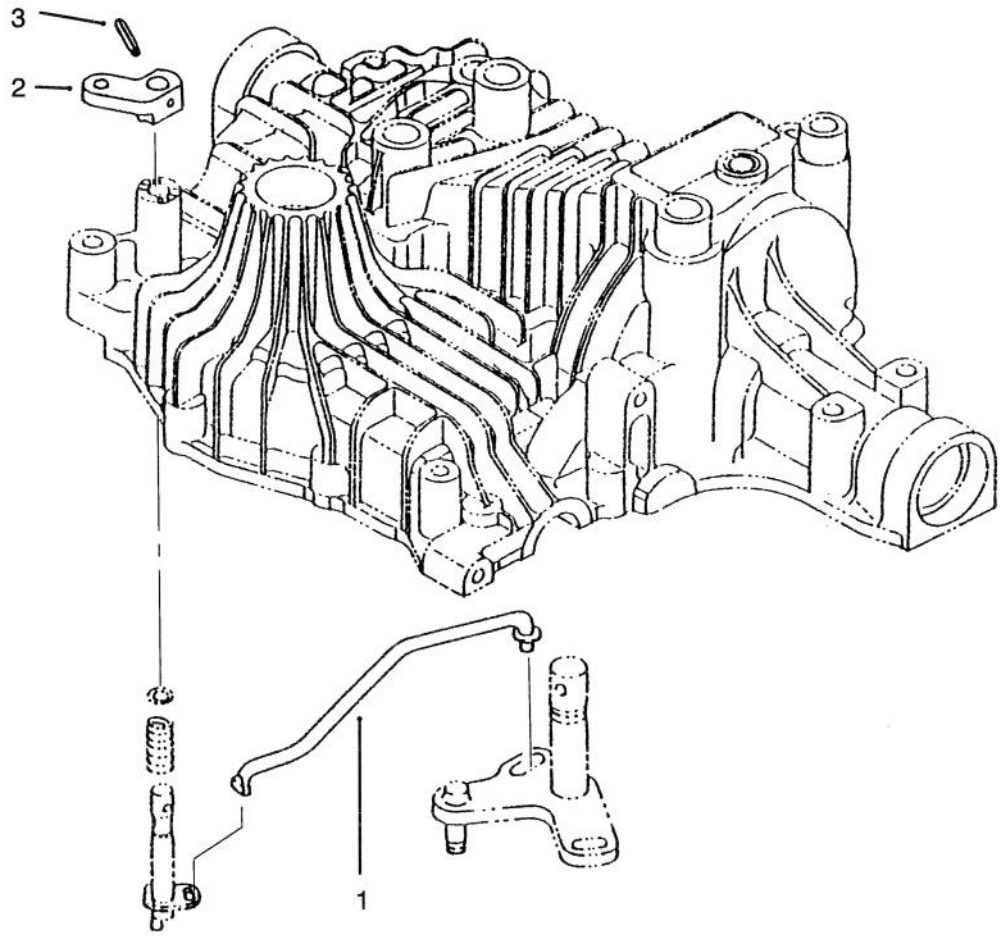

Sheet No.: 406

c–1864

Bypass Return

Ref. No.	Part No.	Qty.	Description
1	93–0401	1	Rod–Bypass
2	93–0402	1	Arm–Valve Release
3	93–0403	1	Pin–Roll

Ref. No.	Part No.	Qty.	Description

3317–773

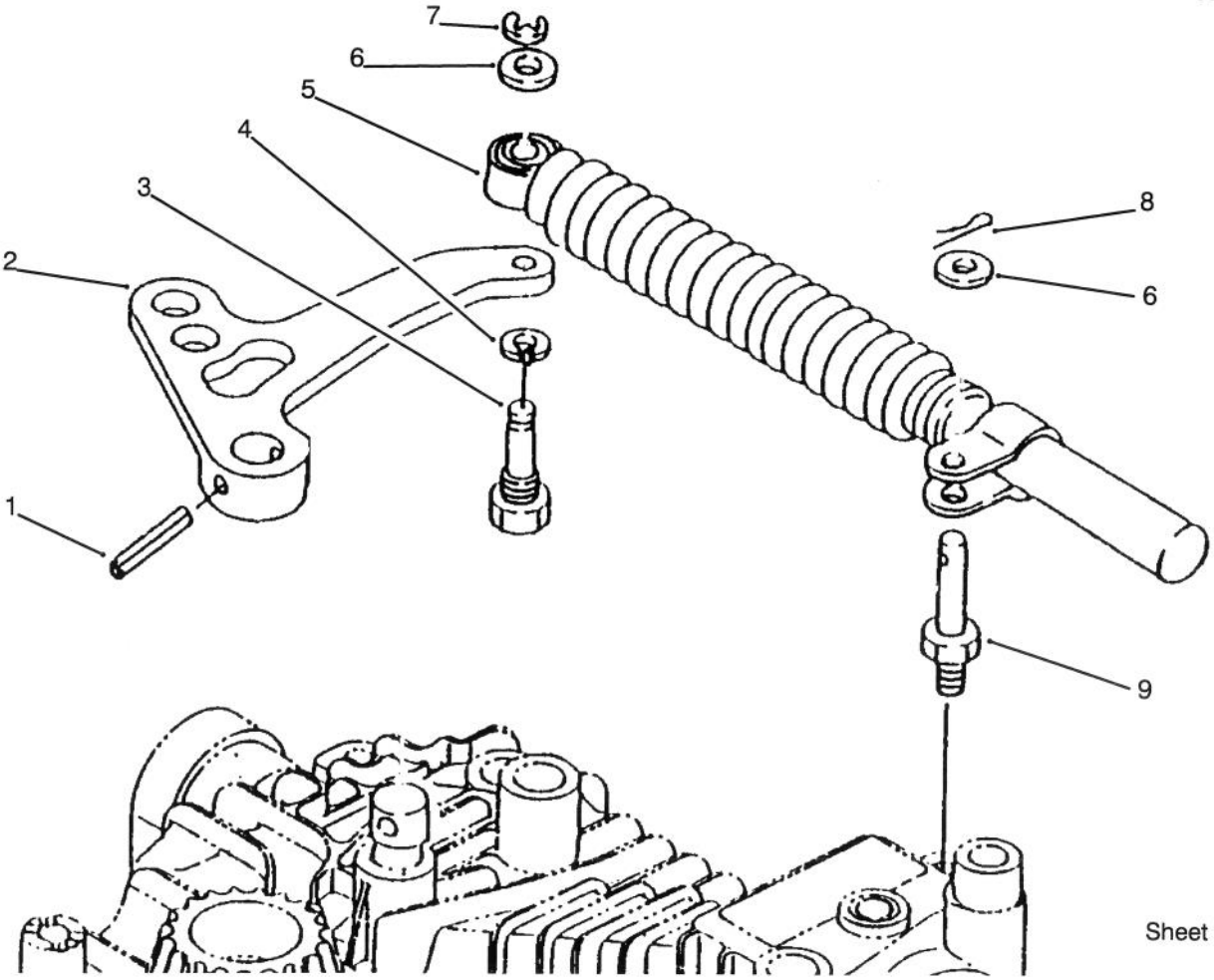

Sheet No.: 407
C–1865

Lever Damper

Ref. No.	Part No.	Qty.	Description
1	93–0411	1	Pin–Roll
2	93–0404	1	Arm
3	93–0407	1	Bolt
4	93–0409	1	Washer
5	93–0405	1	Shock Absorber
6	93–0408	2	Washer
7	93–0410	1	Ring
8	93–0412	1	Pin–Cotter
9	93–0406	1	Stud

Ref. No.	Part No.	Qty.	Description

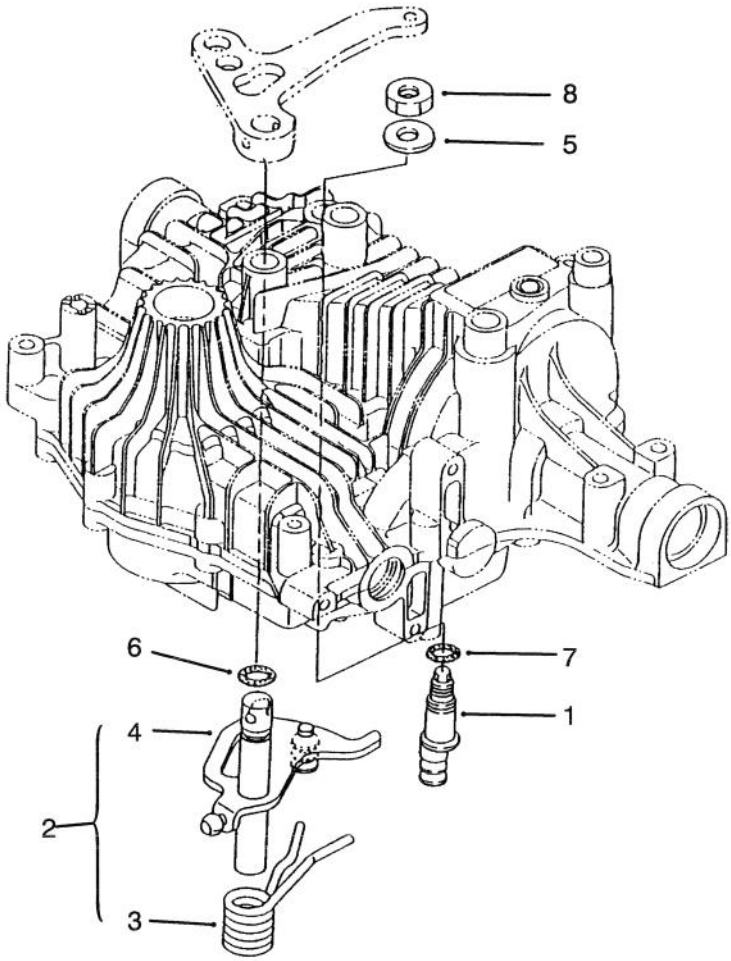

Sheet No.: 408

C–1866

N-Centering

Ref. No.	Part No.	Qty.	Description
1	93–0413	1	Fulcrum
2	93–0414	1	Shaft ASM Incl 3–4
†3		1	Spring
†4		1	Shaft–Control
5	93–0417	1	Washer
6	93–0418	1	Packing
7	93–0419	1	Packing
8	93–0420	1	Nut

Ref. No.	Part No.	Qty.	Description

† Included in a service kit or in an assembly

3317–773

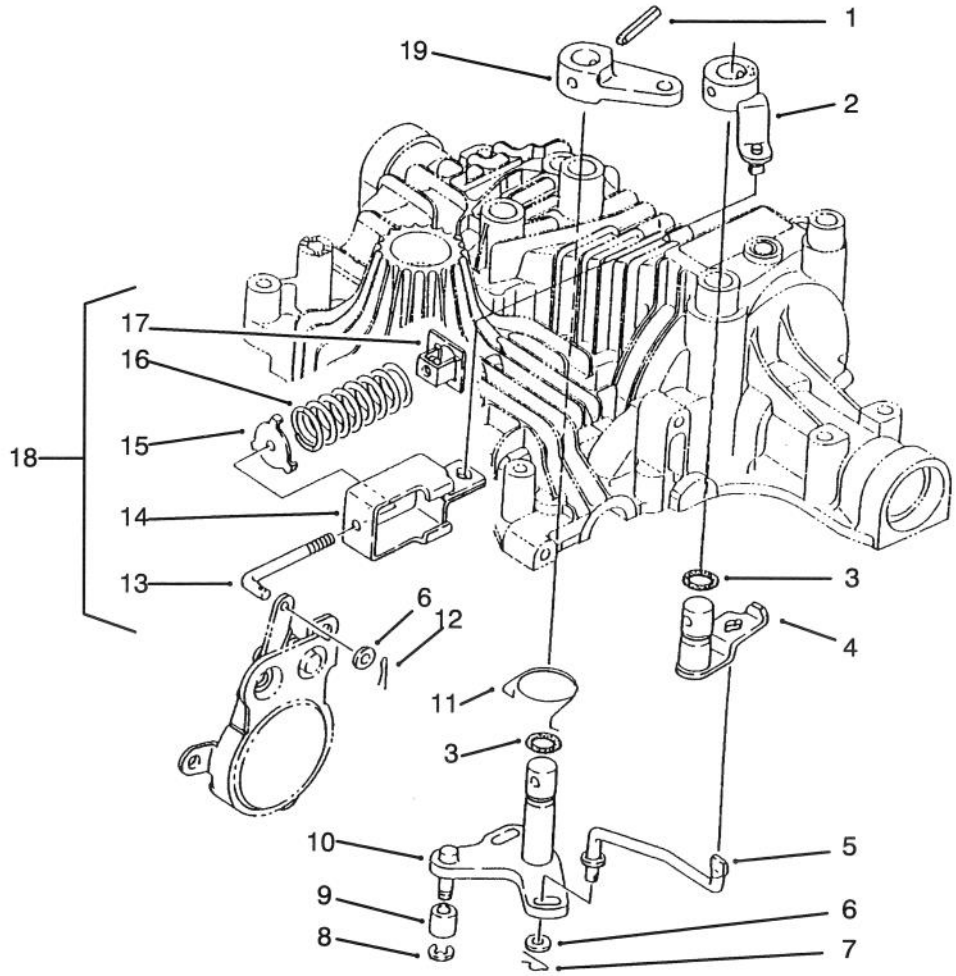

Sheet No.: 409

C–1867

Brake Interlock

Ref. No.	Part No.	Qty.	Description
1	93–0411	2	Pin–Roll
2	93–0433	1	Arm–Brake B
3	93–0418	2	Packing
4	93–0432	1	Arm–Brake A
5	93–0431	1	Rod–Brake
6	93–0435	2	Washer
7	93–0434	1	Pin–Snap
8	93–0410	1	Ring
9	93–0421	1	Bushing
10	93–0430	1	Shaft–Brake
11	93–0422	1	Return–Brake
12	93–0412	1	Pin–Cotter
†13	93–0428	1	Rod–Adjuster
†14	93–0426	1	Holder–Spring
†15	93–0425	1	Guide–Spring
†16	93–0427	1	Spring
†17	93–0424	1	Adjuster
18	93–0423	1	Rod ASM Incl 13–17
19	93–0429	1	Arm–Brake

Ref. No.	Part No.	Qty.	Description

† Included in a service kit or in an assembly

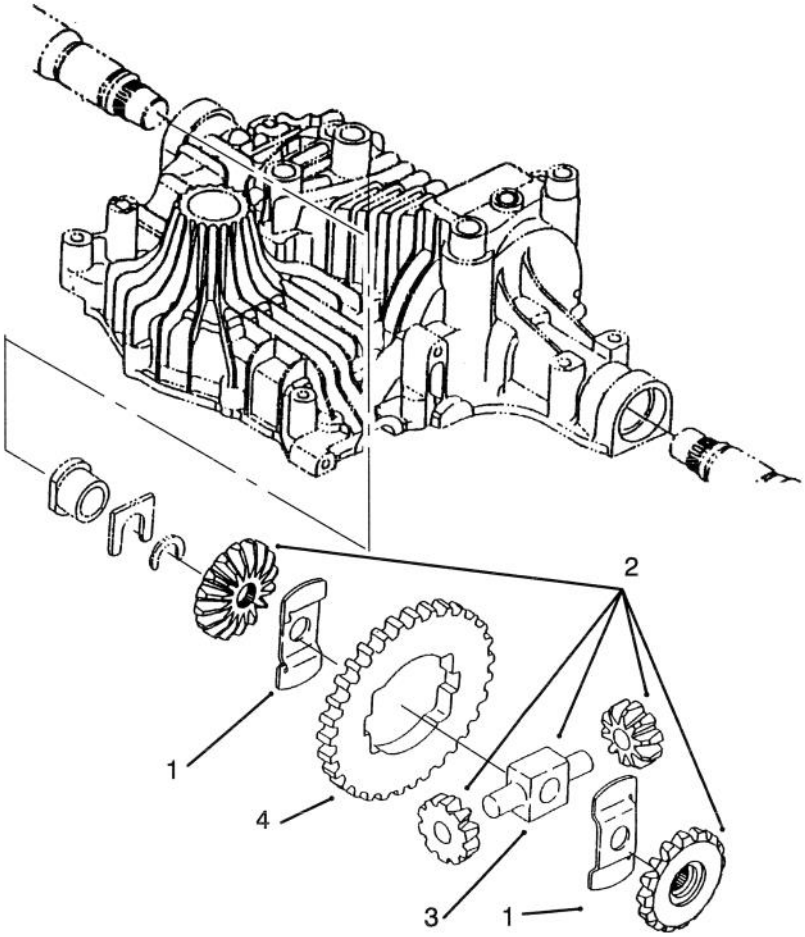

Sheet No.: 410

c–1868

Differential Gear

Ref. No.	Part No.	Qty.	Description
1	93–0444	2	Washer–Thrust
2	93–0440	1	Differential Gear ASM
3	93–0443	1	Shaft–Pinion
4	93–0445	1	Gear–Final

Ref. No.	Part No.	Qty.	Description

3317–773

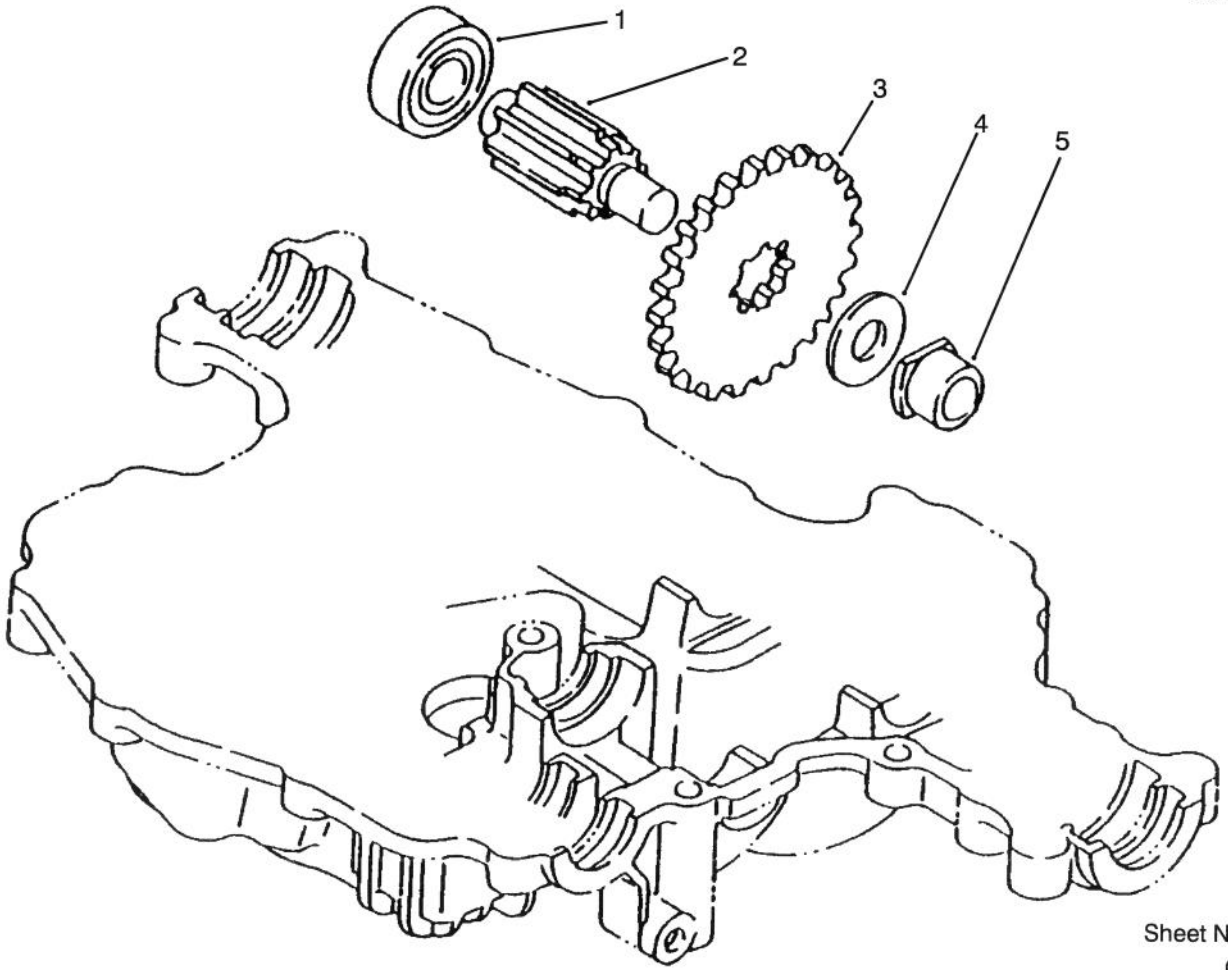

Sheet No.: 411
C–1869

Final Pinion

Ref. No.	Part No.	Qty.	Description
1	93–0446	1	Bearing
2	93–0447	1	Shaft–Final Pinion
3	93–0448	1	Gear–Final Shaft
4	93–0449	1	Washer
5	93–0450	1	Bushing

Ref. No.	Part No.	Qty.	Description

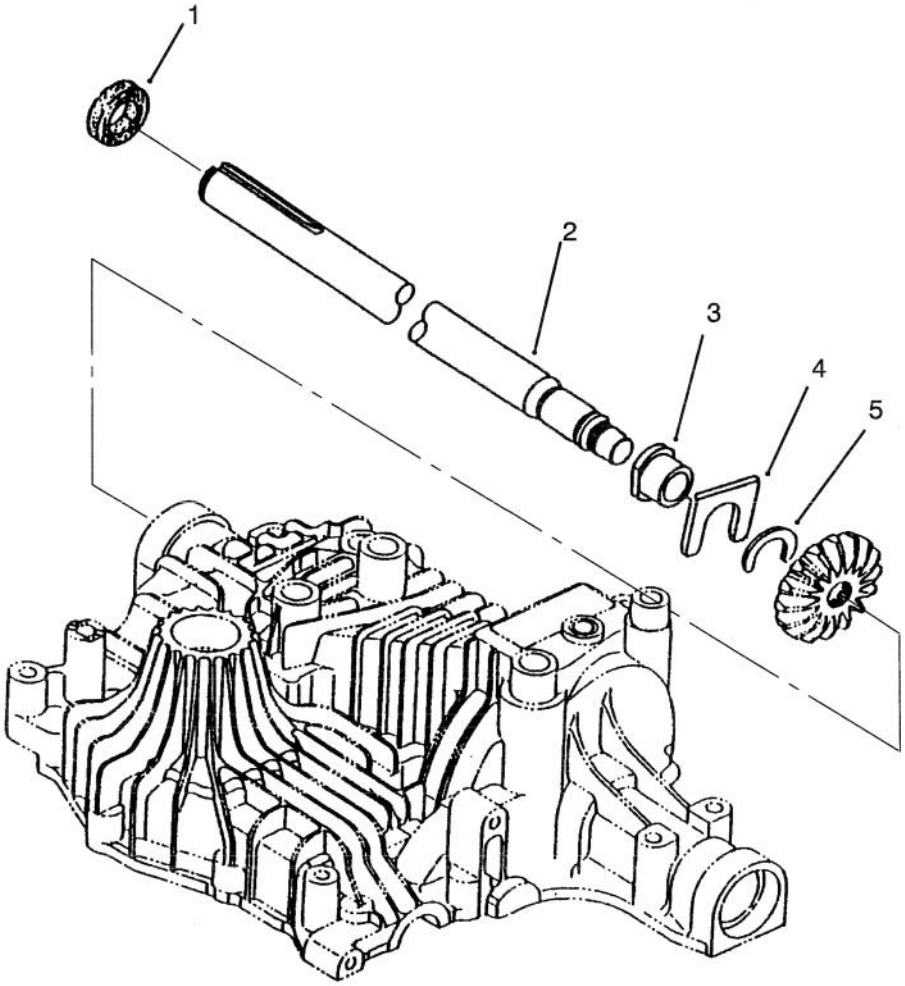

Sheet No.: 412

C–1870

Axle Shaft

Ref. No.	Part No.	Qty.	Description
1	93–0451	2	Seal
2	93–0452	1	Shaft–Axle Right
3	93–0454	2	Bushing
4	93–0455	2	Washer–Thrust
5	93–0456	2	Ring
*	93–0453	1	Shaft–Axle Left

Ref. No.	Part No.	Qty.	Description

* Not illustrated

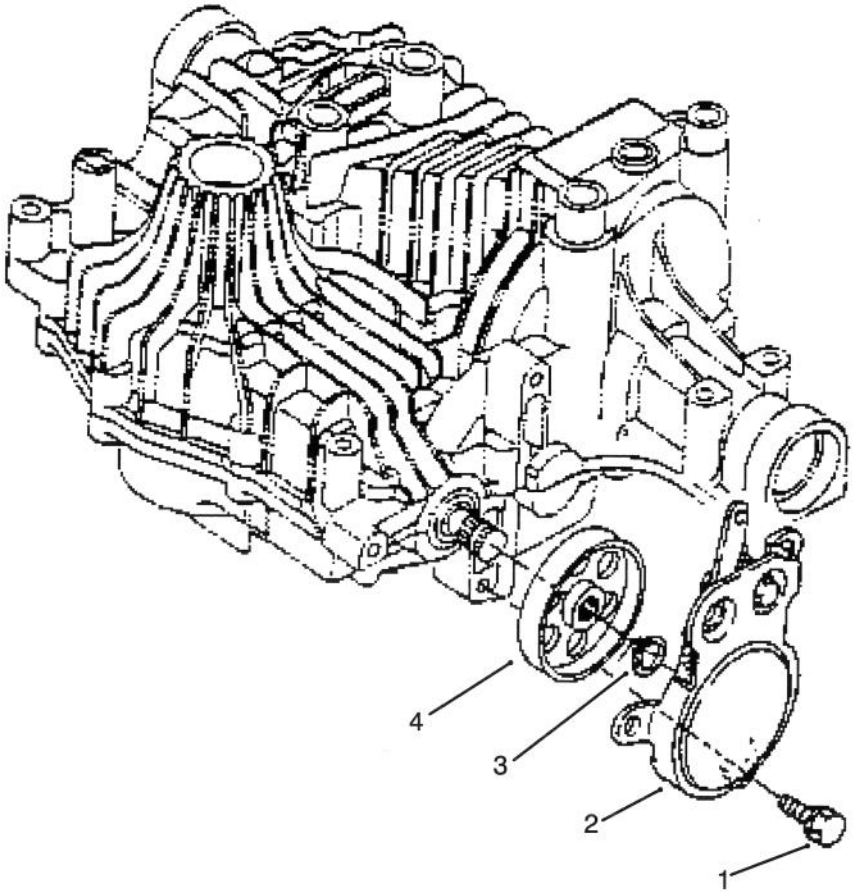

Sheet No.: 413
C–1871

Brake

Ref. No.	Part No.	Qty.	Description
1	93–0457	3	Bolt W/Washer
2	93–0458	1	Band–Brake Interlock
3	93–0373	1	Ring–Snap
4	93–0460	1	Drum–Brake

Ref. No.	Part No.	Qty.	Description

Electric Schematic Single Cylinder Hydro Drive

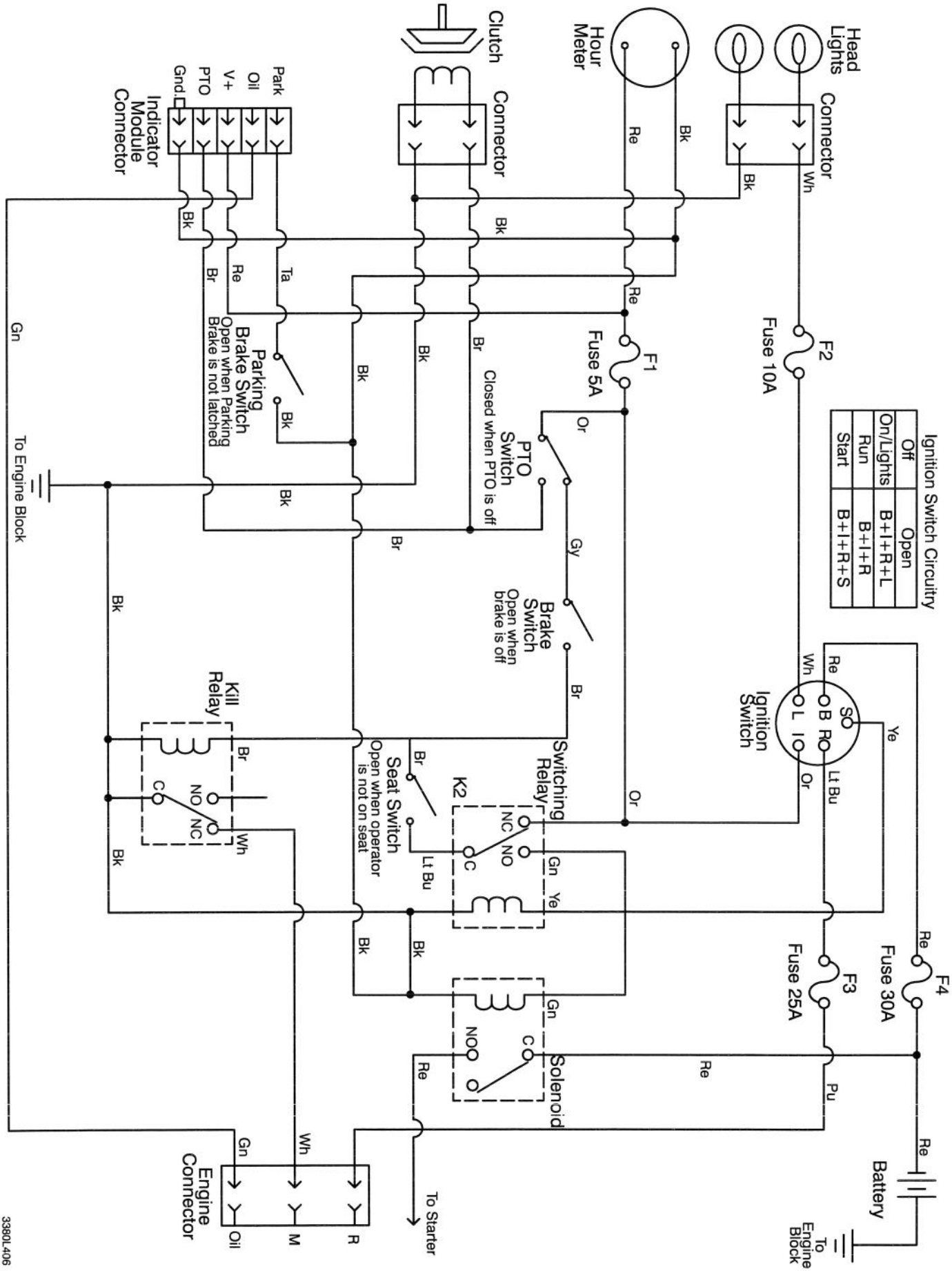

C–1944

Wire Harness Routing — Single Cylinder Engine

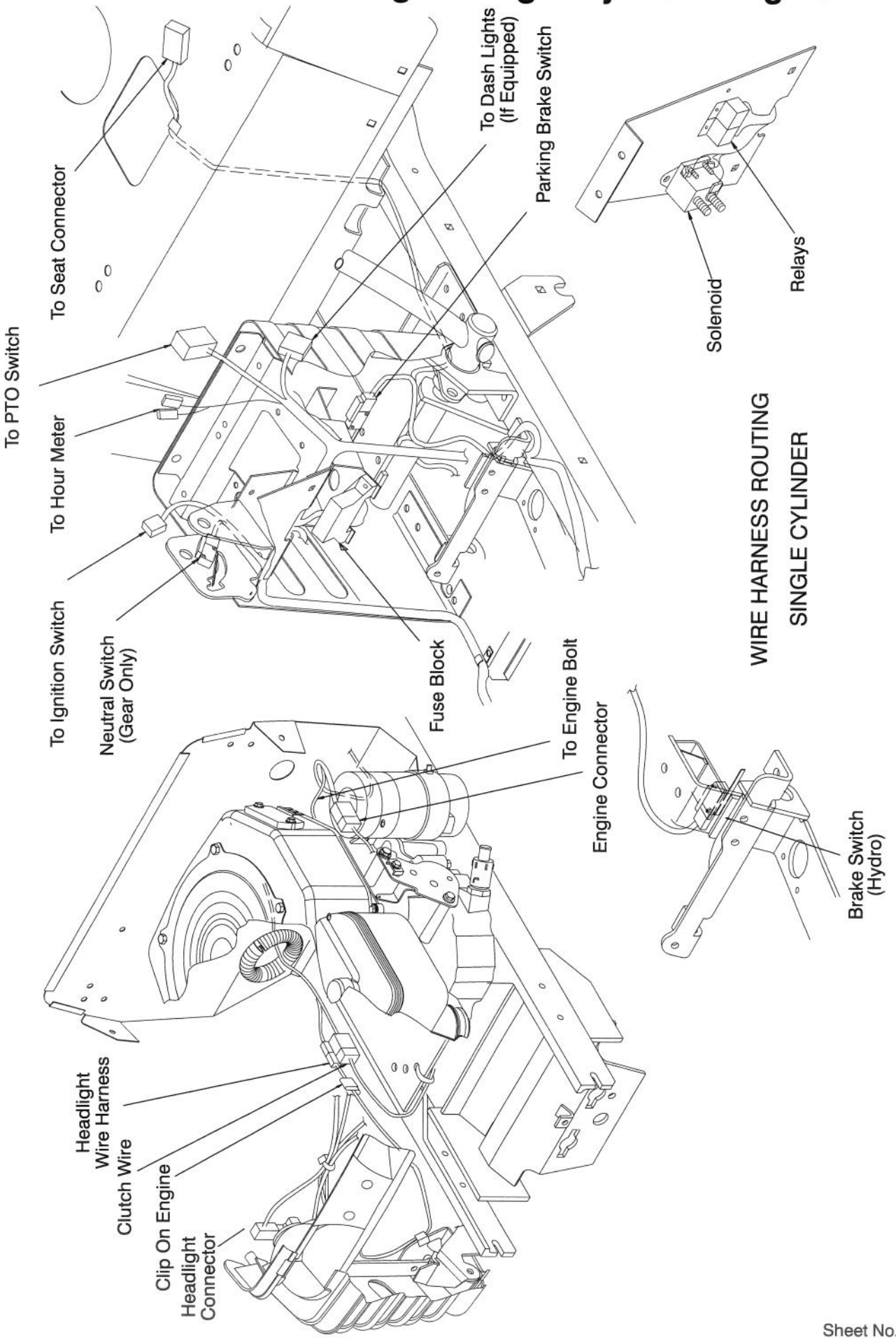

Toro Part Number Index

Part No.	Page No.	Ref. No.	Qty.	Description
1278	4	11	2	Washer–Shim
1278	5	17	4	Washer–Shim
2534	15	1	2	Clip–Spring
3624	13	13	1	Spring–Compression
5108	5	3:3	2	Valve–Tire Tubeless
5108	19	1:2	2	Valve–Tire Tubeless
5210	5	18	4	Washer–Shim
5618	5	19	1	Ring–Retaining
7896	3	4	1	Washer–Bowed
8130	13	14	1	Retainer–Spring
8830	14	16	1	Retainer–"j"
8870	13	25	1	Trunnion
104047	8	3:2	1	Bushing
104048	8	3:1	1	Fuel Valve
105503	1	16	2	Bushing
105503	6	14	2	Bushing
105842	11	12	1	Battery
106269	13	43	1	Bearing–Flange
106288	7	16	2	Clamp
106557	6	12	2	Reflector
106948	11	6	1	Tray–Battery
107069	7	20	4	Nut–Speed
108881	4	5	1	Nut–Hex
109189	4	7	1	Bearing–Flange
109547	11	8	2	Hook–Battery
109553	11	15	1	Boot–Battery Cable
109989	6	21	2	Spacer
110391	4	6	1	Bearing–Wheel
110513	5	3:2	4	Bearing–Wheel
111078	11	5	1	Cable–Battery Black
111383	4	8	1	Collar W/Set Screw
111418	4	3	1	Bushing
111418	15	11	1	Bushing
111419	4	1	1	Washer–Bearing
111419	15	5	1	Washer–Bearing
111646	4	9	1	Grip Ring
112168	13	16	1	Decal–Lift (Only On: 72046)
112843	9	8	1	Washer–PTO
114064	10	4	2	Bearing–Elec Clutch (Only On: 72064)
114621	6	6	1	Decal–Noise (Only On: 72064)
114720	11	9	1	Tube–Battery Drain
115203	9	9	1	Screw–HH
115593	13	8	1	Knob
116397	2	31	2	Relay
116744	19	1:3	2	Tire
117127	5	3:4	2	Tire
117316	11	2	1	Rod–Battery Hold Down
147665	13	3	2	Screw
147665	16	17	2	Screw
609900	7	9	2	Nut–Speed
614249	1	30	1	Tie Strap
614249	12	17	1	Tie Strap
614249	12	27	1	Tie Strap
614249	14	11	1	Tie Strap
700806	6	18	2	Knob
700919	2	15	1	Nut
701178	6	10	2	Cap–Protector
702366	1	27	1	Clip–Wire Retainer
702366	7	2	1	Clip–Wire Retainer
702366	9	2	1	Clip–Wire Retainer
933141	13	7	1	Pin–Spirol
933148	13	12	1	Pin–Spirol

*Not Illustrated

Toro Part Number Index (cont.)

Part No.	Page No.	Ref. No.	Qty.	Description
933270	5	5	2	Pin–Roll
936118	18	12	2	Snap Ring
9150026	5	8	4	Nut–Lock
9202154	17	12	1	Washer–Flat
9202324	5	16	2	Washer–10 GA
9266934	9	1	3	Screw–HWHTF
9267154	5	10	1	Screw
5–1336	19	5	2	Key
24–7924	12	19	2	Cover–Drive Shaft
28–2480	5	20	2	Washer–Flat
38–1420	6	2	1	Switch–Seat
46–8093	1	31	2	Screw–TAP
46–8093	12	22	2	Screw–TAP
48–7730	3	20	2	Screw–HH
48–7730	9	13	4	Screw–HH
49–2040	18	15	3	Screw–HH
61–9780	5	1	2	Hubcap
62–7770	2	14	1	Key–Ignition
65–2920	16	16	1	Pad–Pedal
66–0120	2	10	2	Knob
76–1340	7	27	1	Decal–USA (Only On: 72046)
78–1221	19	1:1	2	Wheel
78–1940–01	5	12	1	Arm–Front Spindle RH
78–1950–01	5	6	1	Arm–Front Spindle LH
78–2140	13	41	1	Trunnion
78–2431	13	29	1	Rod
78–2491–03	14	15	1	Stop–PTO
78–2601–01	5	13	2	Spindle
78–2610	4	2	1	Gear–Sector
78–2920	5	7:2	1	Joint–Ball
78–2920	5	9:2	1	Joint–Ball
78–5801	5	7:3	1	Joint–Ball RH W/ Jam Nut
78–5811	5	9:3	1	Joint–Ball LH
78–6810–03	13	35	1	Plate
78–6820–03	11	7	1	Plate–Battery
78–6831	13	30	1	Shaft
78–7360	13	33	1	Rod
78–7390	13	28	1	Link
78–7960–01	5	4	1	Axle–Front
78–9150–03	4	4	1	Plate
78–9740	13	9	1	Decal–HOC Knob
79–0950–03	6	17	1	Bracket–Pivot RH
79–0970–03	6	15	1	Bracket–Pivot LH
79–1250	13	27	2	Pin
79–3401–03	13	24	1	Gage Shaft
79–3500	8	10	1	Reservoir
79–7530	15	9	1	Spring–Extension
83–2720	19	6	10	Bolt–Lug
83–6620	12	13	1	Decal–Instruction
88–3870	3	6:1	1	Cover–Steering Wheel
88–3950	6	1	1	Seat (Only On: 72046)
88–3970	1	28	1	Reflector–Lamp
88–3980	8	2	1	Gas Cap ASM
88–4320	1	29	1	Harness–Wire
88–4590	15	4	1	Bolt–Shoulder
88–9930	13	2	1	Switch–Micro
88–9932	16	18	1	Switch – Micro
92–3014	10	1	3	Nut & Spring ASM (Only On: 72064)
92–3015	10	2	1	Rotor ASM W/Bearing (Only On: 72064)
92–3016	10	3	1	Field ASM W/Bearing (Only On: 72064)
92–6511	6	1	1	Seat (Only On: 72064)
92–6656	1	23	1	Lens–Headlight

*Not Illustrated

Toro Part Number Index (cont.)

Part No.	Page No.	Ref. No.	Qty.	Description
92–6674–03	14	7	1	Support–Fender
92–6680	2	8	1	Boot–Steering
92–6686	18	10	1	Pulley
92–6687	7	21	1	Mat–Foot RH
92–6688	7	18	1	Mat–Foot LH
92–6702	4	10	1	Shaft–Steering Lower
92–6705	2	26	1	Lens–Dash
92–6709	2	28	1	Light–Indicator (Only On: 72046)
92–6710	13	11	1	Grip–Handle
92–6711	13	10	1	Tip–Rod
92–6716	9	20	1	Gasket–Exhaust
92–6717	3	18	1	U–Joint–Steering
92–6718	18	9	1	Belt–Hydro
92–6720	2	18	1	Decal–Choke/PTO (Only On: 72046)
92–6721	2	13	1	Decal–Throttle/Ignition (Only On: 72046)
92–6725	7	23	1	Decal–HOC (Only On: 72046)
92–6726	18	3	1	Decal–Hydro Valve (Only On: 72046)
92–6727	7	5	1	Decal–Fuel Level
92–6728	1	12	1	Decal–Hood LH
92–6729	1	13	1	Decal–Hood RH
92–6730	7	3	1	Decal–Rear Fender
92–6732	2	28	1	Housing–Indicator Light (Only On: 72064)
92–6737	8	8	1	Hose
92–6742	18	14	1	Fan
92–6746–01	7	13	1	Footrest–LH
92–6747–01	7	19	1	Footrest–RH
92–6750	6	3	2	Spacer–Nylon
92–6754	8	5	1	Hose–Fuel Line
92–6769	18	2	2	U–Bolt
92–6776	3	13	1	Bracket–Detent
92–6777–03	3	1	1	Bracket–Support
92–6778–03	12	9	1	Support–Column
92–6780	9	18	2	Nut–HHF
92–6781	2	24	1	Control–Choke
92–6782	2	22	1	Control–Throttle
92–6785	2	17	1	Switch–Ignition
92–6794	13	4	1	Wedge–HOC Adjust
92–6795–01	7	28	1	Fender
92–6796	2	11	1	Cover–Slot RH
92–6797	2	19	1	Cover–Slot LH
92–6798	3	11	1	Cap–Rod
92–6855–03	13	32	1	Arm
92–6859–03	12	6	1	Support–Dash
92–6860	12	8	4	Nut–Retainer
92–6862	9	19	1	Muffler
92–6867–01	9	17	1	Shield–Muffler
92–6868–03	14	4	1	Bracket–Idler
92–6877	9	5	1	Valve–Oil Drain
92–6878–03	9	21	1	Baffle–Muffler
92–6883	5	7	1	Steering Link RH
92–6884	5	9	1	Steering Link LH
92–6885	9	7	1	Clutch–PTO (Only On: 72064)
92–6888	9	6	1	Pulley
92–6900	15	7	1	Arm–Idler
92–6902	17	18	1	Pad–Pedal Forward
92–6903	17	1	1	Pad–Pedal Reverse
92–6913–03	17	2	1	Pedal–Hydro
92–6914–03	1	32	1	Baffle–Hood Upper
92–6917–03	1	10	1	Bracket–Hinge RH
92–6918–03	1	9	1	Bracket–Hinge LH
92–6936–03	12	15	1	Cover–Side LH
92–6937–03	12	2	1	Cover–Side RH

*Not Illustrated

Toro Part Number Index (cont.)

Part No.	Page No.	Ref. No.	Qty.	Description
92–6943	18	13	1	Spacer–Fan
92–6949	16	16	1	Tube–Brake
92–6960	12	24	2	Latch–Hood
92–6962	17	7	1	Bushing
92–6964–03	14	6	1	Bracket–HOC
92–6965	13	6	1	Rod–HOC
92–6966	17	17	1	Spacer–Hydro Pedal
92–6968	16	5	1	Trunnion–Brake
92–6970	17	8	1	Rod–Bypass
92–6971	3	5	1	Lever–Tilt
92–6972–03	6	5	1	Support–Seat
92–6975	2	25	1	Decal–Dash Lens (Only On: 72064)
92–6977–03	13	17	1	Rod–Lift Lever
92–6978	13	38	1	Rod–HOC Indicator
92–6979	13	42	1	Plate–HOC Gage
92–6982	16	14	1	Spacer–Brake
92–6986	6	8	2	Bolt–Shoulder
92–6987	1	24	1	Decal–Horsehead
92–6988	16	8	1	Rod–Brake
92–6989	2	1	1	Cable–Battery Red
92–6990	11	1	1	Cable–Battery Red
92–6992–03	14	12	1	Bracket–Steering
92–6996–03	1	18	1	Hinge–Hood RH
92–6997–03	1	17	1	Hinge–Hood LH
92–6998	3	22	1	Spacer–Yoke
92–6999	3	15	1	Spacer–Yoke
92–7000–03	16	4	1	Bracket–Park Brake
92–7004–03	16	22	1	Support–Park Brake
92–7006	1	4	4	Nut
92–7007	13	39	1	Spring–Extension
92–7008	17	15	2	Rod End
92–7009	16	2	1	Grip–Parking Brake
92–7018	17	4	1	Rod
92–7020	7	25	4	Screw–TTH
92–7020	12	1	9	Screw–TTH
92–7048–03	1	21	1	Bracket–Hood Hinge RH
92–7049–03	1	20	1	Bracket–Hood Hinge LH
92–7054	6	7	2	Spring–Compression
92–7057–03	5	11	1	Pin–Front
92–7077	1	3	1	Inlet–Seal Air
92–7090	18	3	1	Decal–Bypass (Only On: 72064)
92–7092	7	23	1	Decal–HOC (Only On: 72064)
92–7101	15	8	1	Pulley–Flat
92–7102	15	13	2	Pulley–Idler
92–7148	1	6	2	Foam–Sidepanel
92–8747	14	14	2	Decal–Attach A Matic
92–8946	7	26	1	Decal–Danger (Only On: 72046)
92–9845	2	4	1	Solenoid
93–0302	12	12	1	Decal–Slope/Park Brake (Only On: 72046)
93–0354	31	9	1	Bolt
93–0355	31	14	1	Magnet
93–0356	31	7	1	Plug/Packing INC 5–6
93–0360	31	3	1	Ring
93–0361	31	4	2	Seal
93–0362	31	11	1	Bolt
93–0363	31	8	11	Screw–TAP
93–0364	31	10	2	Screw–TAP
93–0365	33	10	1	Cylinder ASM INC 6–9
93–0365	34	13	1	Cylinder ASM INC 6–9
93–0370	33	3	1	Spring
93–0371	33	1	2	Washer
93–0371	34	7	1	Washer

*Not Illustrated

Toro Part Number Index (cont.)

Part No.	Page No.	Ref. No.	Qty.	Description
93–0372	33	5	1	Shaft–Pump
93–0373	33	4	3	Ring–Snap
93–0373	34	6	2	Ring–Snap
93–0373	43	3	1	Ring–Snap
93–0374	33	2	1	Bearing–Ball
93–0374	34	8	1	Bearing–Ball
93–0375	34	5	1	Housing
93–0376	34	11	1	Bearing–Thrust
93–0386	34	9	1	Shaft–Motor
93–0387	34	10	1	E Ring
93–0388	35	7	2	Thrust Metal
93–0389	35	13	1	Swash Plate INC 8–9
93–0392	35	11	1	Bearing
93–0393	35	12	1	Plate–Thrust
93–0394	35	10	1	Plate–Thrust
93–0395	35	1	1	Arm
93–0396	35	3	1	Spring
93–0397	35	2	1	Shaft–Bypass
93–0398	35	5	1	Block Set INC 6
93–0400	35	4	1	Packing
93–0401	36	1	1	Rod–Bypass
93–0402	36	2	1	Arm–Valve Release
93–0403	36	3	1	Pin–Roll
93–0404	37	2	1	Arm
93–0405	37	5	1	Shock Absorber
93–0406	37	9	1	Stud
93–0407	37	3	1	Bolt
93–0408	37	6	2	Washer
93–0409	37	4	1	Washer
93–0410	37	7	1	Ring
93–0410	39	8	1	Ring
93–0411	37	1	1	Pin–Roll
93–0411	39	1	2	Pin–Roll
93–0412	37	8	1	Pin–Cotter
93–0412	39	12	1	Pin–Cotter
93–0413	38	1	1	Fulcrum
93–0414	38	2	1	Shaft ASM INC 3–4
93–0417	38	5	1	Washer
93–0418	38	6	1	Packing
93–0418	39	3	2	Packing
93–0419	38	7	1	Packing
93–0420	38	8	1	Nut
93–0421	39	9	1	Bushing
93–0422	39	11	1	Return–Brake
93–0423	39	18	1	Rod ASM INC 13–17
93–0424	39	17	1	Adjuster
93–0425	39	15	1	Guide–Spring
93–0426	39	14	1	Holder–Spring
93–0427	39	16	1	Spring
93–0428	39	13	1	Rod–Adjuster
93–0429	39	19	1	Arm–Brake
93–0430	39	10	1	Shaft–Brake
93–0431	39	5	1	Rod–Brake
93–0432	39	4	1	Arm–Brake A
93–0433	39	2	1	Arm–Brake B
93–0434	39	7	1	Pin–Snap
93–0435	39	6	2	Washer
93–0440	40	2	1	Differential Gear ASM
93–0443	40	3	1	Shaft–Pinion
93–0444	40	1	2	Washer–Thrust
93–0445	40	4	1	Gear–Final
93–0446	41	1	1	Bearing

*Not Illustrated

Toro Part Number Index (cont.)

Part No.	Page No.	Ref. No.	Qty.	Description
93–0447	41	2	1	Shaft–Final Pinion
93–0448	41	3	1	Gear–Final Shaft
93–0449	41	4	1	Washer
93–0450	41	5	1	Bushing
93–0451	42	1	2	Seal
93–0452	42	2	1	Shaft–Axle Right
93–0453	42		1	Shaft–Axle Left
93–0454	42	3	2	Bushing
93–0455	42	4	2	Washer–Thrust
93–0456	42	5	2	Ring
93–0457	43	1	3	Bolt W/Washer
93–0458	43	2	1	Band–Brake Interlock
93–0460	43	4	1	Drum–Brake
93–0461	32	1	2	Holder–Bypass
93–0465	32	5	2	Packing
93–0466	32	6	2	Ring–Back Up
93–0471	32	11	2	Pin–Knock
93–0472	32	12	2	Bushing
93–0474	32	14	1	Plug
93–0475	32	15	1	Packing
93–0476	32	16	1	Connector
93–0478	32	18	1	Filter
93–0479	32	19	3	Bolt
93–0480	32	20	1	Plug
93–0481	32	17	1	Packing
93–0481	32	21	1	Packing
93–0482	32	22	1	Valve ASM A1 INC 1–10
93–0483	32	23	1	Valve ASM A2
93–0484	32	13	1	Case INC 11–12 & 20–23
93–0486–03	12	14	1	Hoodstand W/Decals (Only On: 72046)
93–0488–03	12	14	1	Hoodstand W/Decals (Only On: 72064)
93–0489–01	7	24	1	Plate–Footrest W/Decal (Only On: 72046)
93–0490	1	2	1	Hood
93–0491	1	7	1	Sidepanel–LH Hood
93–0492	1	8	1	Sidepanel–RH Hood
93–0494	1	22	1	Grille & Screen ASM
93–0520–03	16	21	1	Bracket–Micro Sw
93–0523–03	13	44	1	Bracket–Pivot Linkage
93–0540	16	9	1	Spring–Extension
93–0546–03	18	8	1	Strap–Torque
93–1131	12	23	1	Trim–Seal
93–1144	8	6	2	Spacer–Fuel Tank
93–1146	3	3	1	Bushing–Steering
93–1148–03	3	12	1	Column
93–1357	3	14	1	Spring–Extension
93–3167	16	1	1	Rod–Park Brake
93–3240	16	20	1	Seal–Plunger
93–3658	15	12	2	Spacer
93–3659–03	19	2	2	Hub–Wheel
93–6668	11	13	1	Decal–Battery Charge Ins (Only On: 72064)
93–7255	2	13	1	Decal–Dash (Only On: 72064)
93–7256	2	18	1	Decal–Dash (Only On: 72064)
93–7276	11	14	1	Decal–Danger (Only On: 72064)
93–7313	12	12	1	Decal–Danger (Only On: 72064)
93–7314	7	26	1	Decal–Danger (Only On: 72064)
93–7323	13	16	1	Decal–Lift (Only On: 72064)
93–7324	14	13	2	Decal–Installation (Only On: 72064)
93–7328	8	1	1	Decal–Oil Check (Only On: 72064)
93–9275	8	15	1	Guard–Fan (Only On: 72064)
93–9801	5	3:1	2	ASM–Wheel W/Zerk
93–9998	2	16	1	Switch–PTO
94–0293	7	1	1	Decal–Model/Serial Ce (Only On: 72064)

*Not Illustrated

Toro Part Number Index (cont.)

Part No.	Page No.	Ref. No.	Qty.	Description
94–1248	2	25	1	Decal–Dash Lens (Only On: 72046)
94–1712–03	12	4	1	Panel–Support
94–1717–03	7	6	1	W.a.–Rear Panel
94–1720	16	16	1	Lever–Brake
94–1722–03	16	10	1	Lever–Brake
94–1749–03	12	18	1	Firewall
94–1894	2	7	1	Dash–Hydro
94–1980	1	1	2	Foam–Hood
94–2514	9	7	1	Clutch–Electric PTO (Only On: 72046)
94–2668	14	10	1	Frame Wa
94–2862	11	10	1	Harness–Wire
94–2869	6	20	2	Washer–Flat
94–2869	7	12	4	Washer–Flat
94–2874	3	9	1	Shaft–Steer Upper
94–2966	2	9	1	Clip–Boot
94–2970	9	3	1	Decal–Toro Power Plus 15
94–2973	12	16	2	Decal–265–H
94–2979	8	3	1	Tank–Gas
94–3329	9	4	1	Engine–Kohler (Only On: 72046)
94–3330	9	4	1	Engine–Kohler (Only On: 72064)
94–3500	3	6	1	Steering Wheel–14" (Only On: 72046)
94–3501	3	6	1	Steering Wheel–Soft Touc (Only On: 72064)
94–3552–03	13	34	1	Lift Arm W.a.
94–3761–03	13	15	1	Lift Lever Wa
94–4205	18	4	1	Transaxle–Hydro
94–4206	31	1	1	Upper Case ASM INC 2–6
94–4207	31	13	1	Case–Lower
94–4208	2	27	1	Hourmeter
94–4233–03	16	15	1	Brake Pedal Wa
94–4243–01	7	24	1	Plate–Footrest W/Decal (Only On: 72064)
94–4909	6	1:1	1	Trim–Seat (Service) (Only On: 72064)
237–141	2	6	1	Grommet
2412–98	8	4	2	Clamp–Hose
2412–129	8	9	2	Clamp–Hose
256–90	13	31	2	Bushing–Flange
256–90	16	12	2	Bushing–Flange
302–5	5	14	2	Fitting–Grease
302–11	5	15	1	Fitting–Grease 1/4–28x45
302–26	17	16	1	Fitting–Grease
321–4	2	5	2	Screw–HH
321–4	3	2	4	Screw–HH
321–4	7	8	2	Screw–HH
321–4	8	7	2	Screw–HH
321–4	11	3	2	Screw–HH
321–4	12	10	4	Screw–HH
322–3	1	15	2	Screw–HH
322–3	3	17	1	Screw–HH
322–5	6	4	4	Screw–HH
322–5	14	8	1	Screw–HH
322–5	15	14	2	Screw–HH
322–6	18	1	1	Screw–HH
322–12	18	7	1	Screw HH
322–17	3	23	1	Screw–HH
323–7	17	13	1	Screw–HH
323–10	15	2	3	Screw–HH
323–10	17	10	1	Screw–HH
3217–9	3	7	1	Nut–HH
3218–3	19	4	4	Nut–HJ
3220–3	17	3	2	Nut–Hex Jam
3229–11	12	5	4	Bolt–CARR
3230–1	1	26	2	Screw–CARR
3230–2	6	19	4	Screw–CARR

*Not Illustrated

Toro Part Number Index (cont.)

Part No.	Page No.	Ref. No.	Qty.	Description
3230–2	7	4	6	Screw–CARR
3230–2	14	3	2	Screw–CARR
3230–20	7	15	4	Bolt–CARR
3230–23	7	22	3	Screw–CARR
3230–23	7	29	1	Screw–CARR
3231–4	4	12	1	Bolt–CARR
3231–25	9	14	2	Screw–CARR
3231–25	13	21	2	Screw–CARR
3243–5	19	3	4	Screw–Set
3245–32	4	8:1	1	Screw–Set
3245–32	18	11	1	Screw–Set
3253–4	3	19	2	Washer–Lock
3253–4	9	12	4	Washer–Lock
3253–5	17	14	1	Washer–Lock
3253–7	3	8	1	Washer–Lock
3256–22	7	7	2	Washer–Flat
3256–22	8	12	4	Washer–Flat
3256–23	3	16	2	Washer–Flat
3256–23	7	10	2	Washer–Flat
3256–23	14	2	2	Washer–Flat
3256–23	15	15	2	Washer–Flat
3256–23	16	7	1	Washer–Flat
3256–23	18	5	5	Washer–Flat
3256–24	9	15	2	Washer–Flat
3256–24	13	22	2	Washer–Flat
3256–24	15	6	7	Washer–Flat
3256–24	16	13	1	Washer–Flat
3256–24	17	6	5	Washer–Flat
3256–26	13	20	6	Washer–Flt
3256–28	3	10	1	Washer–Flat
3256–49	6	13	4	Washer–Flt
3272–2	17	9	1	Pin–Cotter
3272–6	13	18	1	Pin–Cotter
3272–6	16	6	2	Pin–Cotter
3272–16	17	11	1	Pin–Cotter
3272–17	5	2	2	Pin–Cotter
3290–282	6	11	4	Pop Rivet
3290–354	13	1	1	Nut–Speed
3290–354	16	19	1	Nut–Speed
3290–479	7	17	14	Fastener–Panel
3296–8	3	24	4	Nut–Lock
3296–8	12	7	4	Nut–Lock
3296–23	13	26	1	Nut–Lock
3296–29	1	19	4	Nut–Lock
3296–29	3	21	2	Nut–Lock
3296–29	6	16	6	Nut–Lock
3296–29	7	11	14	Nut–Lock
3296–29	14	1	2	Nut–Lock
3296–29	14	9	1	Nut–Lock
3296–29	15	3	3	Nut–Lock
3296–29	18	6	6	Nut–Lock
3296–39	9	16	2	Nut–Lock
3296–39	13	23	2	Nut–Lock
3296–39	17	5	1	Nut–Lock
3296–42	2	3	2	Nut–Lock
3296–42	8	13	2	Nut–Lock
3296–42	12	11	3	Nut–Lock
3296–58	6	9	2	Nut–Flange
3296–59	15	10	4	Nut–Lock
32103–22	11	4	4	Nut–Wing
32103–22	12	21	4	Nut–Wing
32104–96	8	16	2	Screw–HHST

*Not Illustrated

Toro Part Number Index (cont.)

Part No.	Page No.	Ref. No.	Qty.	Description
32104–118	2	29	3	Screw–PH
32105–15	1	5	12	Screw–HH
32120–47	13	19	5	Ring–Retaining
32121–25	13	40	1	Pin–Roll
32121–69	16	11	1	Pin–Spring
32121–103	13	37	1	Pin–Spring
32128–10	1	14	8	Nut–Lock HHF
32144–4	12	20	2	Screw–TAP
32144–4	13	5	1	Screw–TAP
32144–8	2	30	2	Screw–PPH
32144–8	12	26	2	Screw–PPH
32144–14	1	11	2	Screw–HH
32144–14	11	11	1	Screw–HH
32144–14	12	25	2	Screw–HH
32144–14	13	36	2	Screw–HH
32144–14	13	45	2	Screw–HH
32144–14	14	5	6	Screw–HH
32144–14	16	3	4	Screw–HH
32144–14	8	14	2	Screw–HH (Only On: 72064)
32144–32	1	33	2	Screw–Plastic
32144–32	2	23	4	Screw–Plastic
32149–2	2	2	2	Nut–Hex Lock
32149–2	12	3	2	Nut–Hex Lock

*Not Illustrated

MAINTENANCE RECORD

Date								

MAINTENANCE RECORD

Date								