FORM NO. 3317–773

TORO®

# Lawn & Garden Tractor

**Model No. 72046 — 6900001 & Up**
**Model No. 72064 — 6900001 & Up**

# Parts Catalog

93–7601 Rev.

## ORDERING REPLACEMENT PARTS

To order replacement parts, please supply: the part number, the quantity, and the description of each part desired.

# Contents


| Description | Page |
|---|---|
| Hood and Grill | 1 |
| Dash | 2 |
| Steering Wheel and Tilt | 3 |
| Lower Steering | 4 |
| Front Axle | 5 |
| Seat | 6 |
| Fender and Footrest | 7 |
| Fuel Tank and Hydro Reservoir | 8 |
| Single Cylinder Engine, Muffler, and P.T.O. | 9 |
| Clutch | 10 |
| Battery | 11 |
| Hoodstand and Firewall | 12 |
| Lift Lever and Height of Cut | 13 |
| Frame | 14 |
| Hydro Drive Components | 15 |
| Hydro Brake | 16 |
| Hydro Control | 17 |
| Hydro Transaxle | 18 |
| Rear Wheel | 19 |
| Crankshaft | 20 |
| Crankcase | 21 |
| Oil Pan / Lubrication | 22 |
| Cylinder Head / Valve / Breather | 23 |
| Ignition / Electrical | 24 |
| Blower Housing & Baffles | 25 |
| Starting System | 26 |
| Fuel System | 27 |
| Engine Controls | 28 |
| Air Intake / Filtration | 29 |
| Exhaust | 30 |
| Transaxle Case | 31 |
| Center Case | 32 |
| Pump Shaft | 33 |
| Motor Shaft | 34 |
| Range Shift | 35 |
| Bypass Return | 36 |
| Lever Damper | 37 |
| N-Centering | 38 |
| Brake Interlock | 39 |
| Differential Gear | 40 |
| Final Pinion | 41 |
| Axle Shaft | 42 |
| Brake | 43 |
| Electric Schematic | 44 |
| Wire Harness Routing | 45 |


# Accessories

| Description | Model / Parts No. |
|---|---|
| 38″ Side Discharge Mower | 98215 |
| 38″ Mulching Mower | 98225 |
| 42″ Side Discharge Mower | 98230 |
| 48″ Side Discharge Mower | 98260 |
| 38″ Twin Bagger | 9920042″/ |
| 48″ Vacuum Bagger | 99201 |
| 48″ Snow Blade | 99251 |
| 42″ Snow Thrower | 99261 |
| 36″ Tiller | 99271 |
| 38″ Mulcher Kit | 99270 |
| Hour Meter Kit | 92–6898 |
| Indicator Light | 92–6897 |

# Part Description Abbreviations

Part descriptions in this catalog may include the following abbreviations.

| Abbreviation | Meaning |
|---|---|
| AR | as required |
| ASM | assembly |
| CARR | carriage |
| DEG | degrees |
| FH | flat head |
| GA | gauge |



© The TORO Company — 1995
*All Rights Reserved*

HF ..... hex flange
HFW ..... hex flange washer
HH ..... hex head
HHF ..... hex head flange
HHST ..... hex head self tapping
HJ ..... hex jam
HOC ..... height-of-cut
HS ..... hex socket
HSBH ..... hex socket button head
HSFH ..... hex socket flat head
HSH ..... hex socket head
HWH ..... hex washer head
HWHTF ..... hex washer head thread forming
INC ..... incorporated
LH ..... left hand
PH ..... pan head
PPH ..... Phillips pan head
PTO ..... power take off
RH ..... right hand
SFH ..... slotted fillister head
SH ..... square head
SHWH ..... slotted hex washer head
SPH ..... slotted pan head
STD ..... standard
TAP ..... self tapping
TH ..... truss head
TTH ..... Torx truss head
WH ..... wing head

# Important Format Explanations

This catalog uses special formats to convey information in illustrations and parts lists. Specifically, one format is used in conjunction with service assemblies and another with quantities associated with reference numbers.

## Service Assemblies

Parts within service assemblies have reference numbers in the form *X:Y*. *X* is the reference number of the service assembly and *Y* is a sequential number unique to each part within the service assembly.

For example, a wheel assembly might be identified by reference number 6, the tire by 6:1, the valve by 6:2, and the wheel by 6:3. When you order the assembly identified by reference number 6, you receive all parts identified by reference numbers 6:1, 6:2, and 6:3. However, you may also order any part individually.

Reference numbers of this type appear in part lists and as callouts in illustrations.

## Reference Numbers with Quantities

Illustrations may have a quantity in parentheses next to a reference number, in the form *X (Y)*. *X* is the reference number. *Y* in parentheses is the quantity of the part identified by the reference number.

For example, the illustration callout 4 (2) indicates that two parts are used in that instance.

# This Page Intentionally Left Blank

Parts Identified in illustration but not in parts list are not used on this Model

3317–773

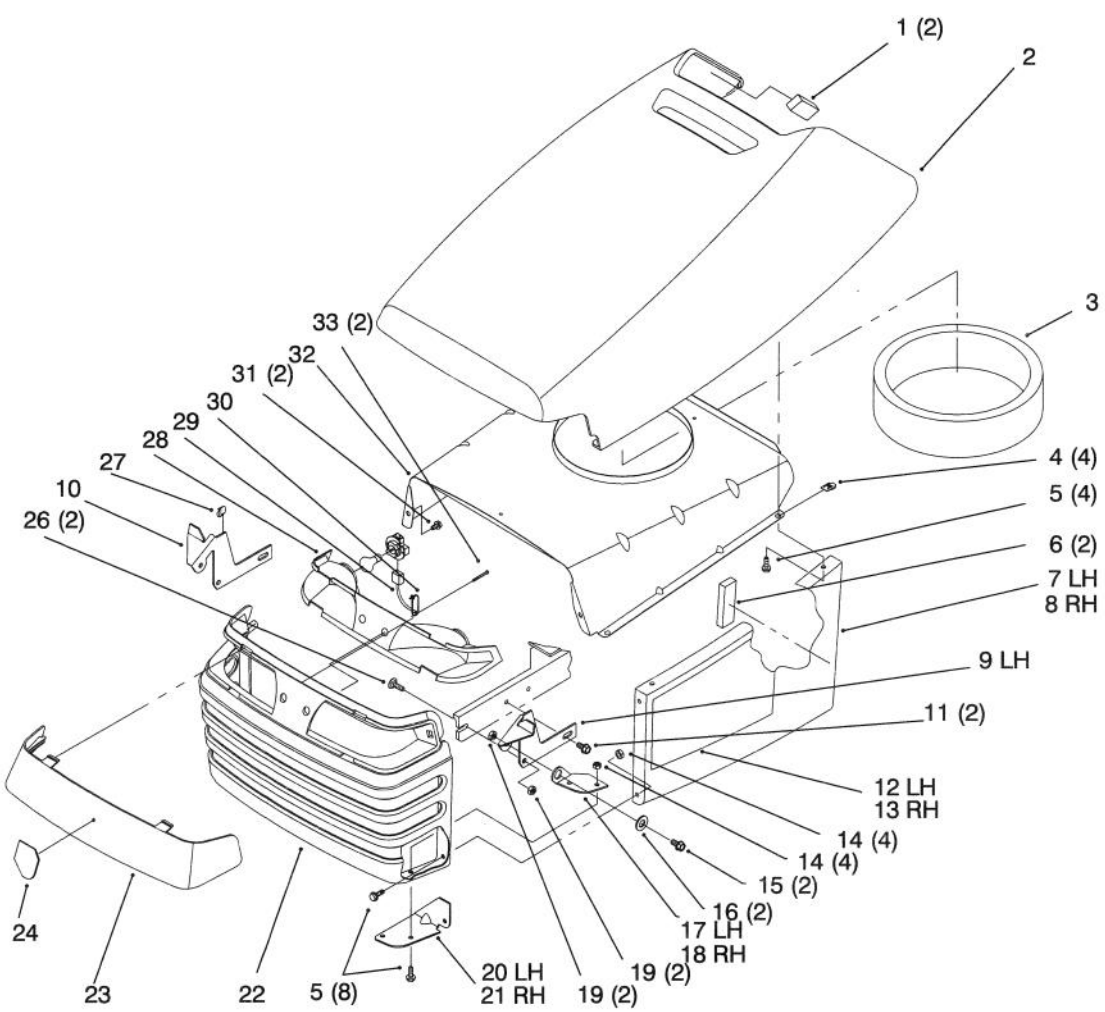


Sheet No.: 2

# Hood and Grill

| Ref. No. | Part No. | Qty. | Description |
|---|---|---|---|
| 2 | 93–0490 | 1 | Hood |
| 3 | 92–7077 | 1 | Inlet–Seal Air |
| 4 | 92–7006 | 4 | Nut |
| 5 | 32105–15 | 12 | Screw–HH |
| 6 | 92–7148 | 2 | Foam–Sidepanel |
| 7 | 93–0491 | 1 | Sidepanel–LH Hood |
| 8 | 93–0492 | 1 | Sidepanel–RH Hood |
| 9 | 92–6918–03 | 1 | Bracket–Hinge LH |
| 10 | 92–6917–03 | 1 | Bracket–Hinge RH |
| 11 | 32144–14 | 2 | Screw–HH |
| 12 | 92–6728 | 1 | Decal–Hood LH |
| 13 | 92–6729 | 1 | Decal–Hood RH |
| 14 | 32128–10 | 8 | Nut–Lock HHF |
| 15 | 322–3 | 2 | Screw–HH |
| 16 | 105503 | 2 | Bushing |
| 17 | 92–6997–03 | 1 | Hinge–Hood LH |
| 18 | 92–6996–03 | 1 | Hinge–Hood RH |
| 19 | 3296–29 | 4 | Nut–Lock |
| 20 | 92–7049–03 | 1 | Bracket–Hood Hinge LH |
| 21 | 92–7048–03 | 1 | Bracket–Hood Hinge RH |
| 22 | 93–0494 | 1 | Grille & Screen ASM |
| 23 | 92–6656 | 1 | Lens–Headlight |
| 24 | 92–6987 | 1 | Decal–Horsehead |
| 26 | 3230–1 | 2 | Screw–CARR |

| Ref. No. | Part No. | Qty. | Description |
|---|---|---|---|
| 27 | 702366 | 1 | Clip–Wire Retainer |
| 28 | 88–3970 | 1 | Reflector–Lamp |
| 29 | 88–4320 | 1 | Harness–Wire |
| 30 | 614249 | 1 | Tie Strap |
| 31 | 46–8093 | 2 | Screw–TAP |
| 32 | 92–6914–03 | 1 | Baffle–Hood Upper |
| 33 | 32144–32 | 2 | Screw–Plastic |

3317–773

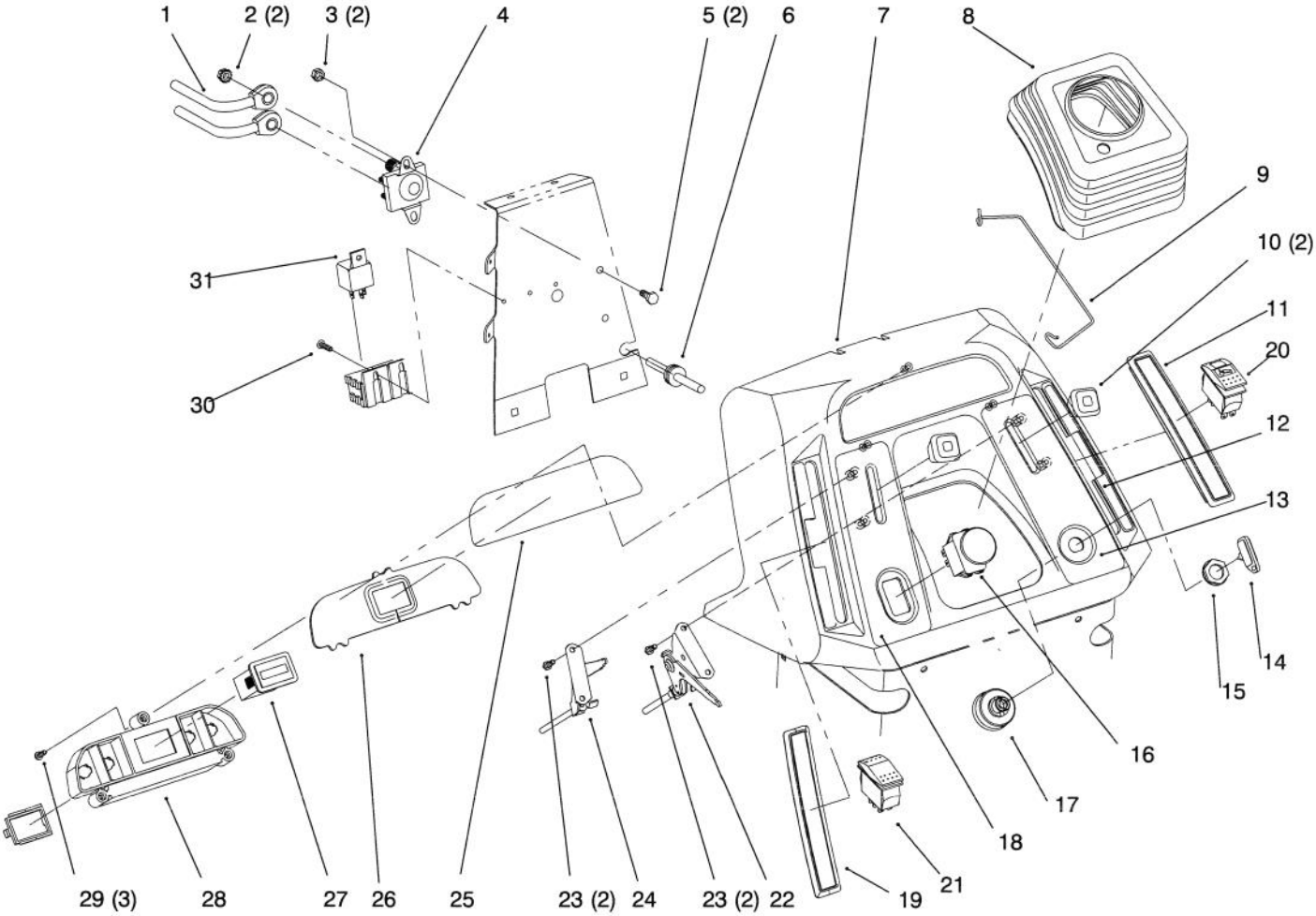


# Dash

| Ref. No. | Part No. | Qty. | Description |
|---|---|---|---|
| 1 | 92–6989 | 1 | Cable–Battery Red |
| 2 | 32149–2 | 2 | Nut–Hex Lock |
| 3 | 3296–42 | 2 | Nut–Lock |
| 4 | 92–9845 | 1 | Solenoid |
| 5 | 321–4 | 2 | Screw–HH |
| 6 | 237–141 | 1 | Grommet |
| 7 | 94–1894 | 1 | Dash–Hydro |
| 8 | 92–6680 | 1 | Boot–Steering |
| 9 | 94–2966 | 1 | Clip–Boot |
| 10 | 66–0120 | 2 | Knob |
| 11 | 92–6796 | 1 | Cover–Slot RH |
| 13 | 92–6721 | 1 | Decal–Throttle/Ignition (Only On: 72046) |
| 13 | 93–7255 | 1 | Decal–Dash (Only On: 72064) |
| 14 | 62–7770 | 1 | Key–Ignition |
| 15 | 700919 | 1 | Nut |
| 16 | 93–9998 | 1 | Switch–PTO |
| 17 | 92–6785 | 1 | Switch–Ignition |
| 18 | 92–6720 | 1 | Decal–Choke/PTO (Only On: 72046) |
| 18 | 93–7256 | 1 | Decal–Dash (Only On: 72064) |
| 19 | 92–6797 | 1 | Cover–Slot LH |
| 22 | 92–6782 | 1 | Control–Throttle |
| 23 | 32144–32 | 4 | Screw–Plastic |

| Ref. No. | Part No. | Qty. | Description |
|---|---|---|---|
| 24 | 92–6781 | 1 | Control–Choke |
| 25 | 92–6975 | 1 | Decal–Dash Lens (Only On: 72064) |
| 25 | 94–1248 | 1 | Decal–Dash Lens (Only On: 72046) |
| 26 | 92–6705 | 1 | Lens–Dash |
| 27 | 94–4208 | 1 | Hourmeter |
| 28 | 92–6709 | 1 | Light–Indicator (Only On: 72046) |
| 28 | 92–6732 | 1 | Housing–Indicator Light (Only On: 72064) |
| 29 | 32104–118 | 3 | Screw–PH |
| 30 | 32144–8 | 2 | Screw–PPH |
| 31 | 116397 | 2 | Relay |

Parts Identified in illustration but not in parts list are not used on this Model

3317–773

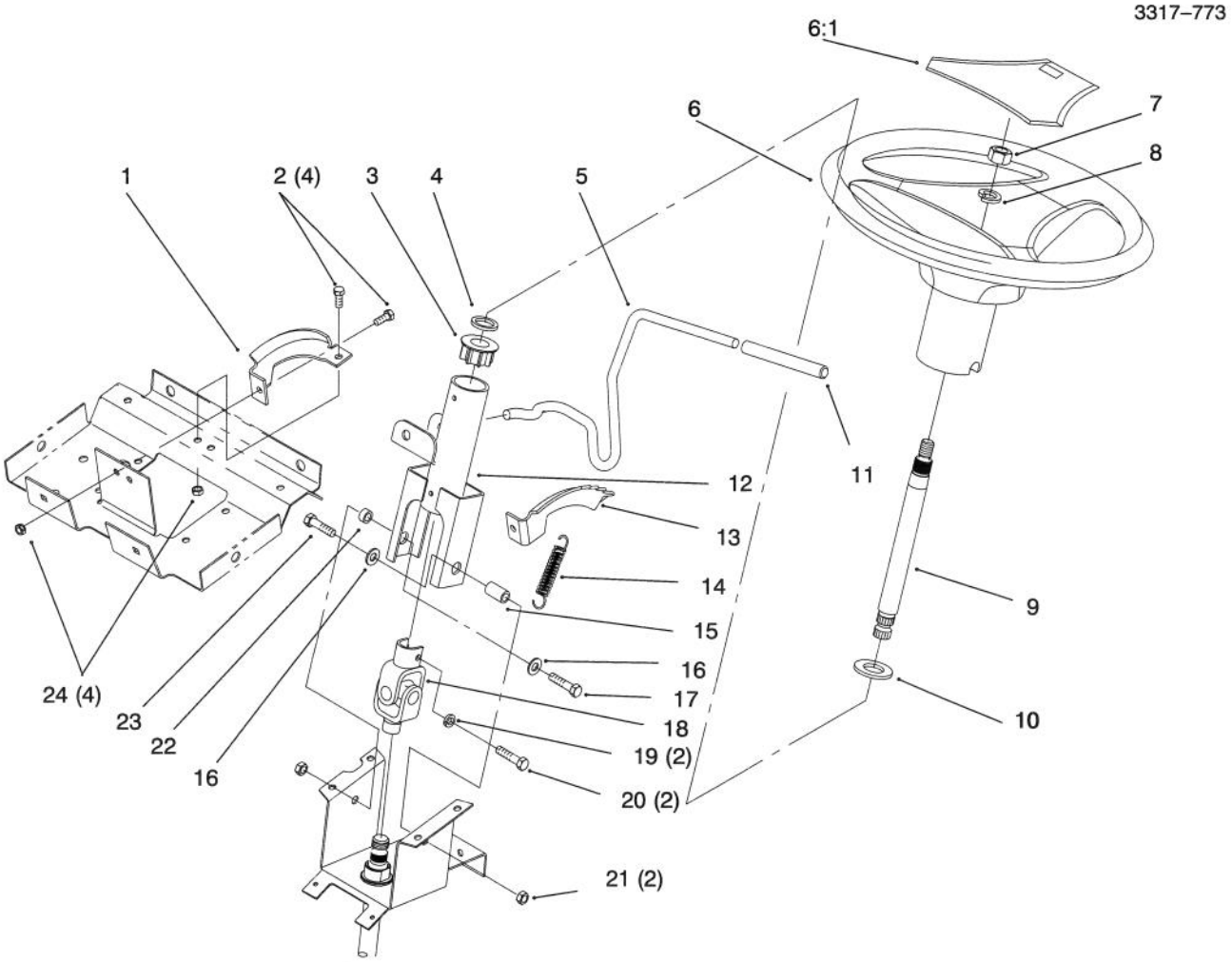


# Steering Wheel and Tilt

| Ref. No. | Part No. | Qty. | Description |
|---|---|---|---|
| 1 | 92–6777–03 | 1 | Bracket–Support |
| 2 | 321–4 | 4 | Screw–HH |
| 3 | 93–1146 | 1 | Bushing–Steering |
| 4 | 7896 | 1 | Washer–Bowed |
| 5 | 92–6971 | 1 | Lever–Tilt |
| 6 | 94–3500 | 1 | Steering Wheel–14" (Only On: 72046) |
| 6 | 94–3501 | 1 | Steering Wheel–Soft Touc (Only On: 72064) |
| 6:1 | 88–3870 | 1 | Cover–Steering Wheel |
| 7 | 3217–9 | 1 | Nut–HH |
| 8 | 3253–7 | 1 | Washer–Lock |
| 9 | 94–2874 | 1 | Shaft–Steer Upper |
| 10 | 3256–28 | 1 | Washer–Flat |
| 11 | 92–6798 | 1 | Cap–Rod |
| 12 | 93–1148–03 | 1 | Column |
| 13 | 92–6776 | 1 | Bracket–Detent |
| 14 | 93–1357 | 1 | Spring–Extension |
| 15 | 92–6999 | 1 | Spacer–Yoke |
| 16 | 3256–23 | 2 | Washer–Flat |
| 17 | 322–3 | 1 | Screw–HH |
| 18 | 92–6717 | 1 | U–Joint–Steering |
| 19 | 3253–4 | 2 | Washer–Lock |
| 20 | 48–7730 | 2 | Screw–HH |
| 21 | 3296–29 | 2 | Nut–Lock |
| 22 | 92–6998 | 1 | Spacer–Yoke |

| Ref. No. | Part No. | Qty. | Description |
|---|---|---|---|
| 23 | 322–17 | 1 | Screw–HH |
| 24 | 3296–8 | 4 | Nut–Lock |

3317–773

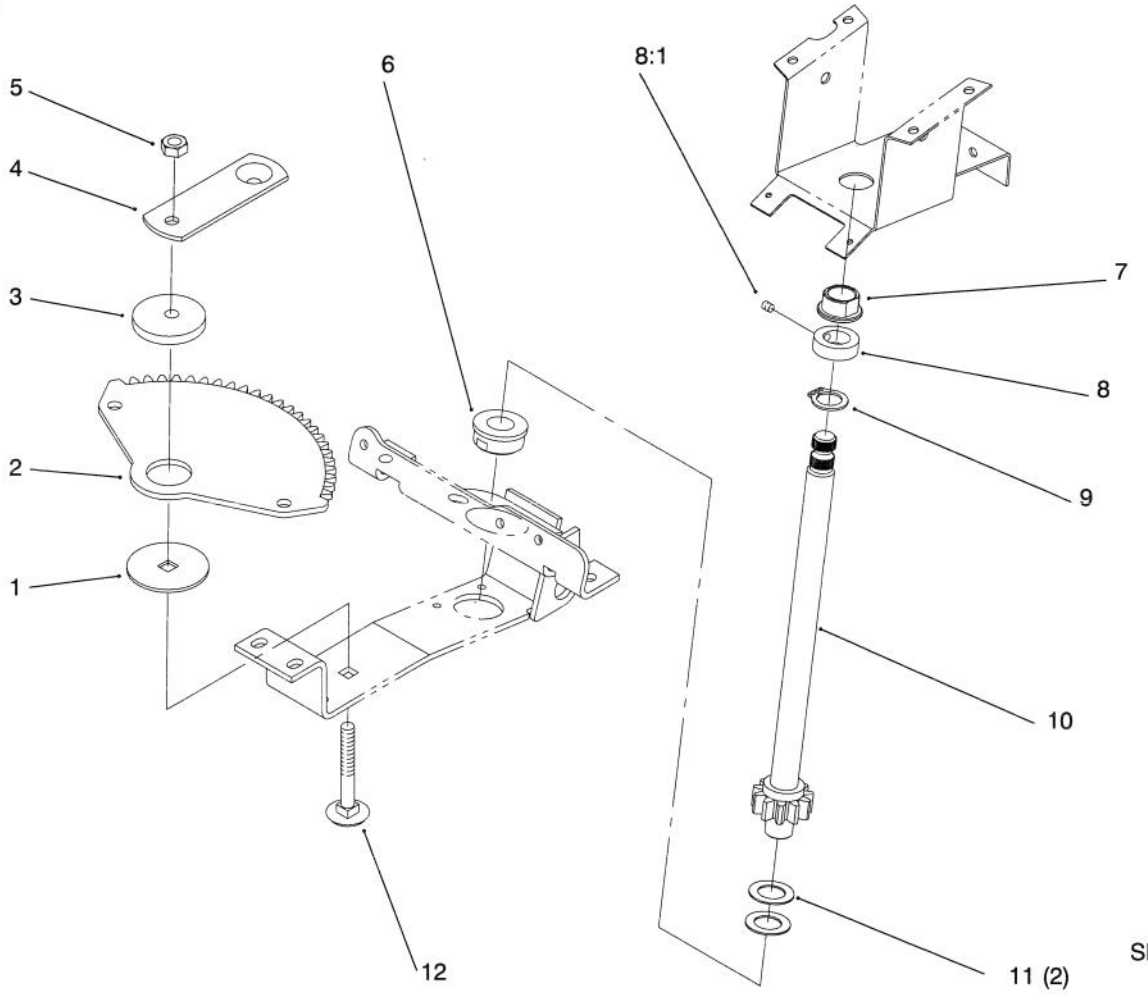


Sheet No.: 8

# Lower Steering

| Ref. No. | Part No. | Qty. | Description |
|---|---|---|---|
| 1 | 111419 | 1 | Washer–Bearing |
| 2 | 78–2610 | 1 | Gear–Sector |
| 3 | 111418 | 1 | Bushing |
| 4 | 78–9150–03 | 1 | Plate |
| 5 | 108881 | 1 | Nut–Hex |
| 6 | 110391 | 1 | Bearing–Wheel |
| 7 | 109189 | 1 | Bearing–Flange |
| 8 | 111383 | 1 | Collar W/Set Screw |
| 8:1 | 3245–32 | 1 | Screw–Set |
| 9 | 111646 | 1 | Grip Ring |
| 10 | 92–6702 | 1 | Shaft–Steering Lower |
| 11 | 1278 | 2 | Washer–Shim |
| 12 | 3231–4 | 1 | Bolt–CARR |

| Ref. No. | Part No. | Qty. | Description |
|---|---|---|---|
| | | | |

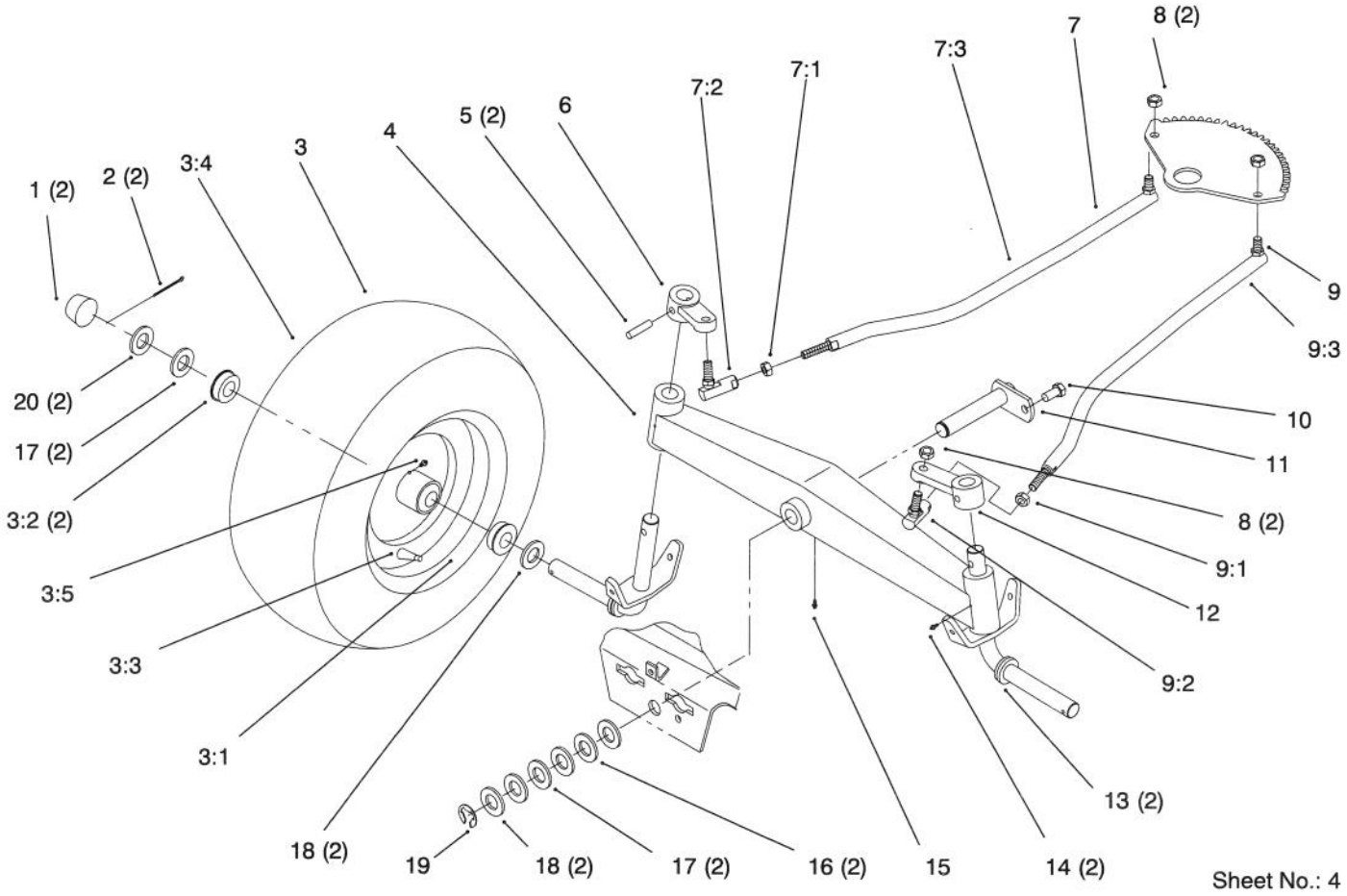


# Front Axle

| Ref. No. | Part No. | Qty. | Description |
|---|---|---|---|
| 1 | 61–9780 | 2 | Hubcap |
| 2 | 3272–17 | 2 | Pin–Cotter |
| ☆3 | | 2 | ASM–Wheel & Tire |
| 3:1 | 93–9801 | 2 | ASM–Wheel W/Zerk |
| 3:2 | 110513 | 4 | Bearing–Wheel |
| 3:3 | 5108 | 2 | Valve–Tire Tubeless |
| 3:4 | 117127 | 2 | Tire |
| 4 | 78–7960–01 | 1 | Axle–Front |
| 5 | 933270 | 2 | Pin–Roll |
| 6 | 78–1950–01 | 1 | Arm–Front Spindle LH |
| 7 | 92–6883 | 1 | Steering Link RH |
| ☆7:1 | | 1 | Nut–Hex Jam |
| 7:2 | 78–2920 | 1 | Joint–Ball |
| 7:3 | 78–5801 | 1 | Joint–Ball RH W/ Jam Nut |
| 8 | 9150026 | 4 | Nut–Lock |
| 9 | 92–6884 | 1 | Steering Link LH |
| ☆9:1 | | 1 | Nut–Hex Jam |
| 9:2 | 78–2920 | 1 | Joint–Ball |
| 9:3 | 78–5811 | 1 | Joint–Ball LH |
| 10 | 9267154 | 1 | Screw |
| 11 | 92–7057–03 | 1 | Pin–Front |
| 12 | 78–1940–01 | 1 | Arm–Front Spindle RH |
| 13 | 78–2601–01 | 2 | Spindle |
| 14 | 302–5 | 2 | Fitting–Grease |

| Ref. No. | Part No. | Qty. | Description |
|---|---|---|---|
| 15 | 302–11 | 1 | Fitting–Grease 1/4–28x45 |
| 16 | 9202324 | 2 | Washer–10 GA |
| 17 | 1278 | 4 | Washer–Shim |
| 18 | 5210 | 4 | Washer–Shim |
| 19 | 5618 | 1 | Ring–Retaining |
| 20 | 28–2480 | 2 | Washer–Flat |

☆ Not serviced

3317–773

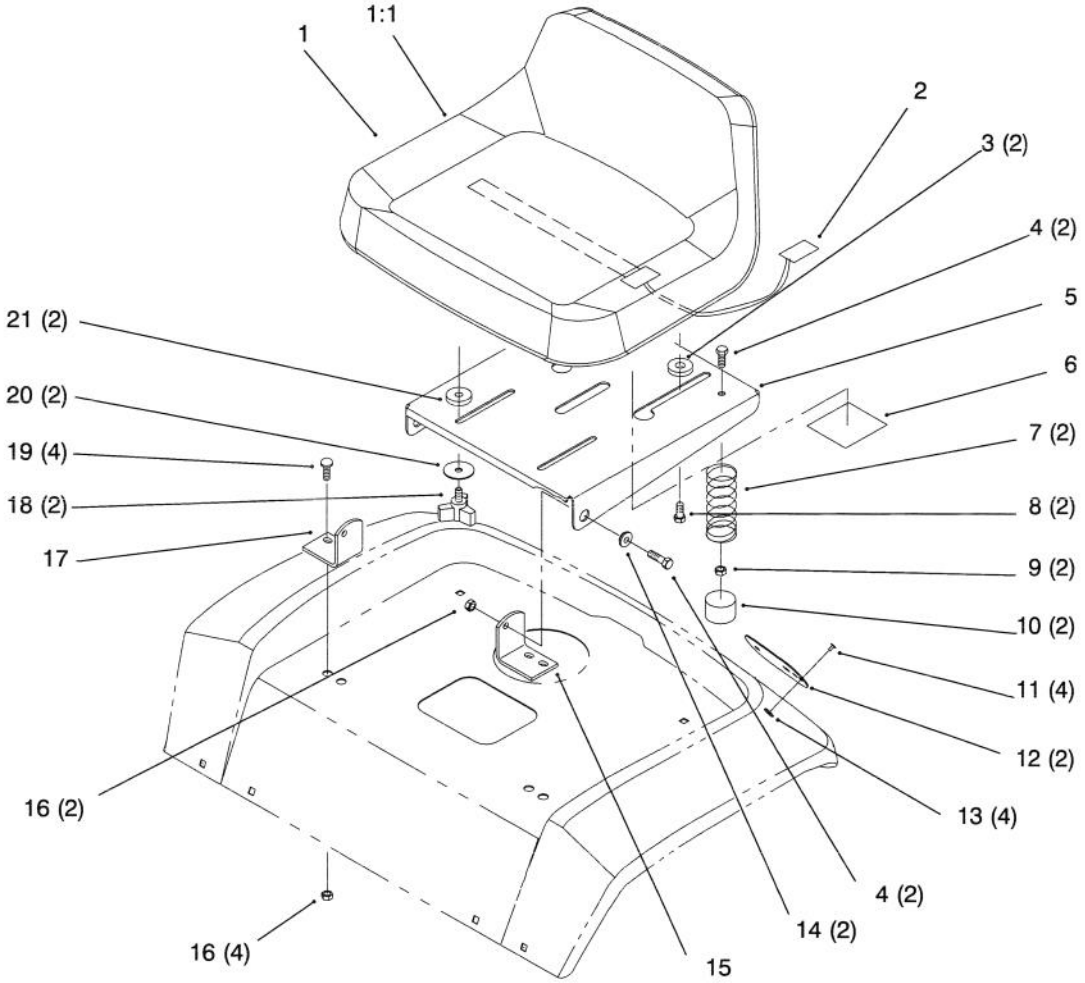


# Seat

| Ref. No. | Part No. | Qty. | Description |
|---|---|---|---|
| 1 | 88–3950 | 1 | Seat (Only On: 72046) |
| 1 | 92–6511 | 1 | Seat (Only On: 72064) |
| 1:1 | 94–4909 | 1 | Trim–Seat (Service) (Only On: 72064) |
| 2 | 38–1420 | 1 | Switch–Seat |
| 3 | 92–6750 | 2 | Spacer–Nylon |
| 4 | 322–5 | 4 | Screw–HH |
| 5 | 92–6972–03 | 1 | Support–Seat |
| 6 | 114621 | 1 | Decal–Noise (Only On: 72064) |
| 7 | 92–7054 | 2 | Spring–Compression |
| 8 | 92–6986 | 2 | Bolt–Shoulder |
| 9 | 3296–58 | 2 | Nut–Flange |
| 10 | 701178 | 2 | Cap–Protector |
| 11 | 3290–282 | 4 | Pop Rivet |
| 12 | 106557 | 2 | Reflector |
| 13 | 3256–49 | 4 | Washer–Flt |
| 14 | 105503 | 2 | Bushing |
| 15 | 79–0970–03 | 1 | Bracket–Pivot LH |
| 16 | 3296–29 | 6 | Nut–Lock |
| 17 | 79–0950–03 | 1 | Bracket–Pivot RH |
| 18 | 700806 | 2 | Knob |
| 19 | 3230–2 | 4 | Screw–CARR |
| 20 | 94–2869 | 2 | Washer–Flat |
| 21 | 109989 | 2 | Spacer |

| Ref. No. | Part No. | Qty. | Description |
|---|---|---|---|
| | | | |

3317–773

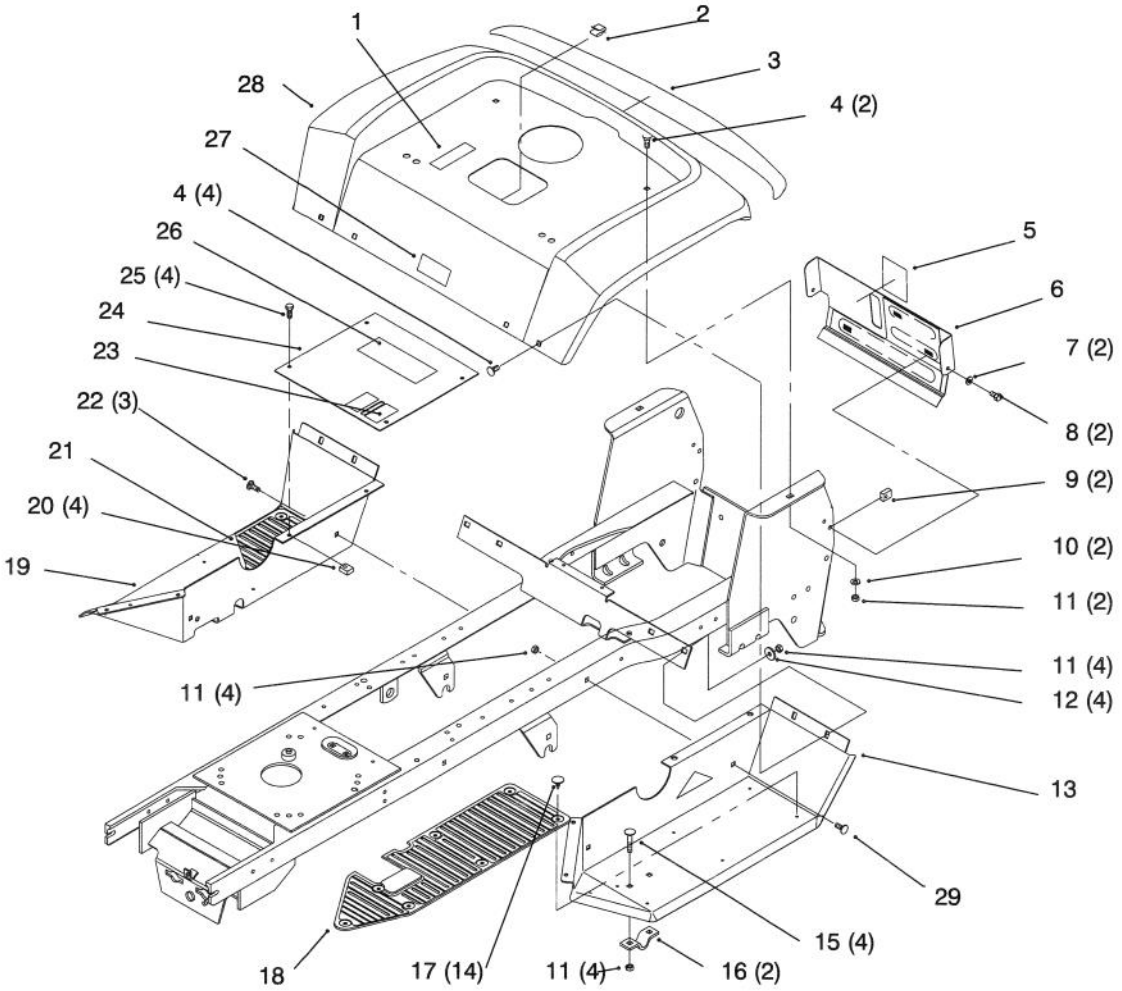


# Fender and Footrest

| Ref. No. | Part No. | Qty. | Description |
|---|---|---|---|
| ☆1 | | 1 | Decal–Model/Serial |
| 2 | 702366 | 1 | Clip–Wire Retainer |
| 3 | 92–6730 | 1 | Decal–Rear Fender |
| 4 | 3230–2 | 6 | Screw–CARR |
| 5 | 92–6727 | 1 | Decal–Fuel Level |
| 6 | 94–1717–03 | 1 | W.a.–Rear Panel |
| 7 | 3256–22 | 2 | Washer–Flat |
| 8 | 321–4 | 2 | Screw–HH |
| 9 | 609900 | 2 | Nut–Speed |
| 10 | 3256–23 | 2 | Washer–Flat |
| 11 | 3296–29 | 14 | Nut–Lock |
| 12 | 94–2869 | 4 | Washer–Flat |
| 13 | 92–6746–01 | 1 | Footrest–LH |
| 15 | 3230–20 | 4 | Bolt–CARR |
| 16 | 106288 | 2 | Clamp |
| 17 | 3290–479 | 14 | Fastener–Panel |
| 18 | 92–6688 | 1 | Mat–Foot LH |
| 19 | 92–6747–01 | 1 | Footrest–RH |
| 20 | 107069 | 4 | Nut–Speed |
| 21 | 92–6687 | 1 | Mat–Foot RH |
| 22 | 3230–23 | 3 | Screw–CARR |
| 23 | 92–6725 | 1 | Decal–HOC (Only On: 72046) |
| 23 | 92–7092 | 1 | Decal–HOC (Only On: 72064) |
| 24 | 93–0489–01 | 1 | Plate–Footrest |

| Ref. No. | Part No. | Qty. | Description |
|---|---|---|---|
| | | | W/Decal (Only On: 72046) |
| 24 | 94–4243–01 | 1 | Plate–Footrest W/Decal (Only On: 72064) |
| 25 | 92–7020 | 4 | Screw–TTH |
| 26 | 92–8946 | 1 | Decal–Danger (Only On: 72046) |
| 26 | 93–7314 | 1 | Decal–Danger (Only On: 72064) |
| 27 | 76–1340 | 1 | Decal–USA (Only On: 72046) |
| 28 | 92–6795–01 | 1 | Fender |
| 29 | 3230–23 | 1 | Screw–CARR |

☆ Not serviced

3317–773

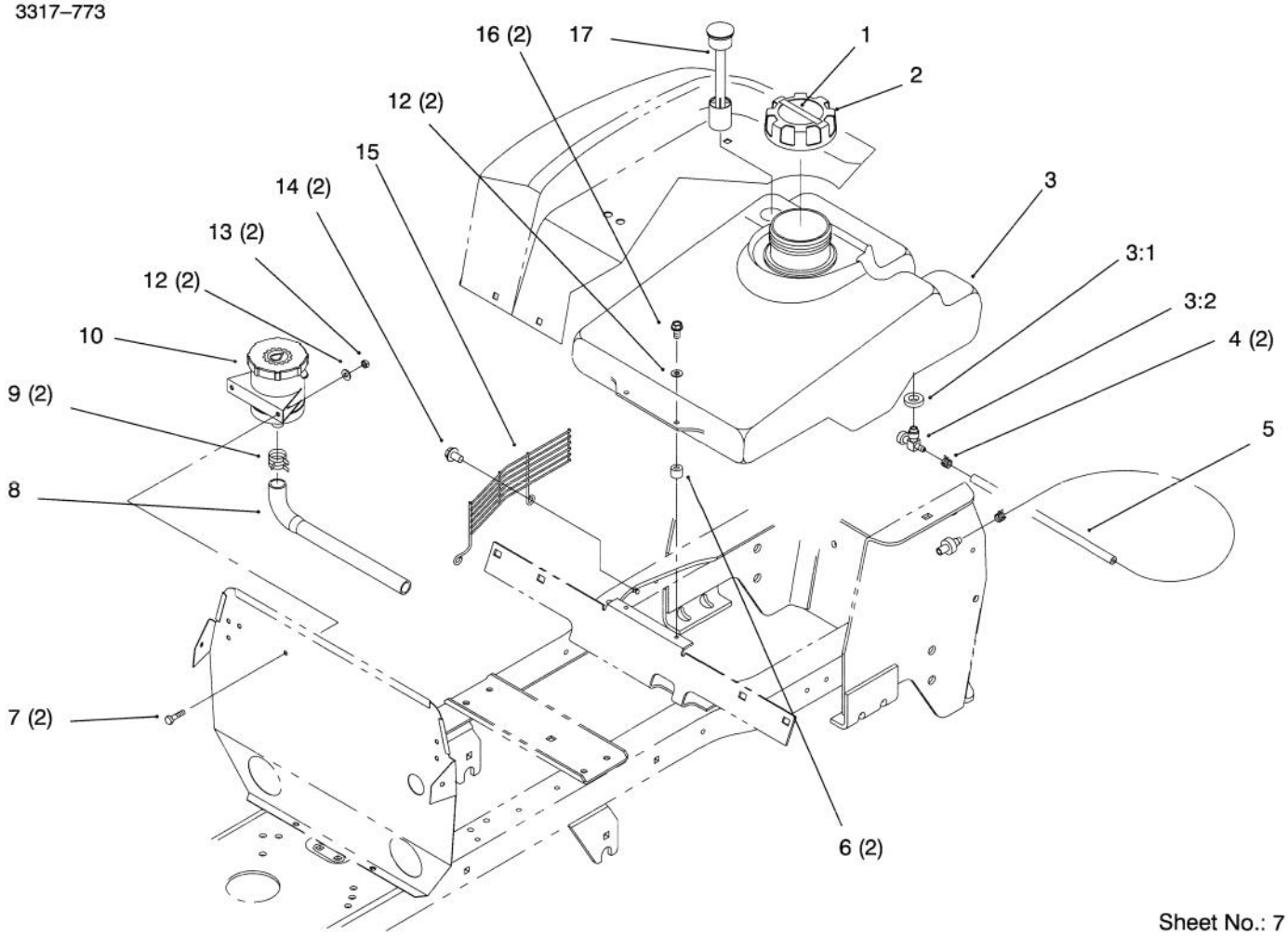


Sheet No.: 7

# Fuel Tank and Hydro Reservoir

| Ref. No. | Part No. | Qty. | Description |
|---|---|---|---|
| ☆1 | | 1 | Decal–Oil Check |
| 2 | 88–3980 | 1 | Gas Cap ASM |
| 3 | 94–2979 | 1 | Tank–Gas |
| 3:1 | 104048 | 1 | Fuel Valve |
| 3:2 | 104047 | 1 | Bushing |
| 4 | 2412–98 | 2 | Clamp–Hose |
| 5 | 92–6754 | 1 | Hose–Fuel Line |
| 6 | 93–1144 | 2 | Spacer–Fuel Tank |
| 7 | 321–4 | 2 | Screw–HH |
| 8 | 92–6737 | 1 | Hose |
| 9 | 2412–129 | 2 | Clamp–Hose |
| 10 | 79–3500 | 1 | Reservoir |
| 12 | 3256–22 | 4 | Washer–Flat |
| 13 | 3296–42 | 2 | Nut–Lock |
| 14 | 32144–14 | 2 | Screw–HH (Only On: 72064) |
| 15 | 93–9275 | 1 | Guard–Fan (Only On: 72064) |
| 16 | 32104–96 | 2 | Screw–HHST |

| Ref. No. | Part No. | Qty. | Description |
|---|---|---|---|

☆ Not serviced

Parts Identified in illustration but not in parts list are not used on this Model

3317–773

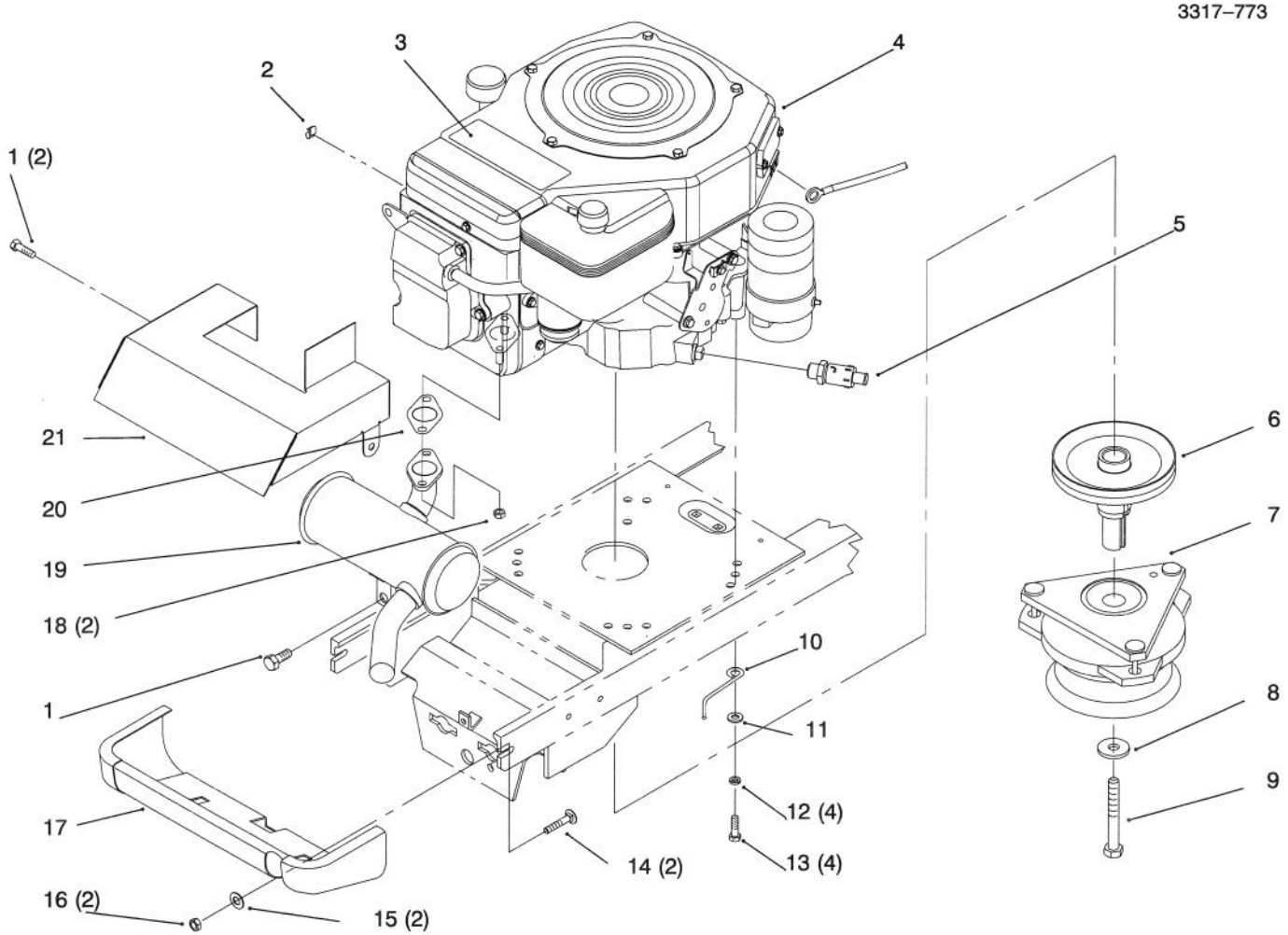


# Single Cylinder Engine, Muffler, and P.T.O.

| Ref. No. | Part No. | Qty. | Description |
|---|---|---|---|
| 1 | 9266934 | 3 | Screw–HWHTF |
| 2 | 702366 | 1 | Clip–Wire Retainer |
| 3 | 94–2970 | 1 | Decal–Toro Power Plus 15 |
| 4 | 94–3329 | 1 | Engine–Kohler (Only On: 72046) |
| 4 | 94–3330 | 1 | Engine–Kohler (Only On: 72064) |
| 5 | 92–6877 | 1 | Valve–Oil Drain |
| 6 | 92–6888 | 1 | Pulley |
| 7 | 92–6885 | 1 | Clutch–PTO (Only On: 72064) |
| 7 | 94–2514 | 1 | Clutch–Electric PTO (Only On: 72046) |
| 8 | 112843 | 1 | Washer–PTO |
| 9 | 115203 | 1 | Screw–HH |
| 12 | 3253–4 | 4 | Washer–Lock |
| 13 | 48–7730 | 4 | Screw–HH |
| 14 | 3231–25 | 2 | Screw–CARR |
| 15 | 3256–24 | 2 | Washer–Flat |
| 16 | 3296–39 | 2 | Nut–Lock |
| 17 | 92–6867–01 | 1 | Shield–Muffler |
| 18 | 92–6780 | 2 | Nut–HHF |
| 19 | 92–6862 | 1 | Muffler |
| 20 | 92–6716 | 1 | Gasket–Exhaust |
| 21 | 92–6878–03 | 1 | Baffle–Muffler |

| Ref. No. | Part No. | Qty. | Description |
|---|---|---|---|
| | | | |

3317–773

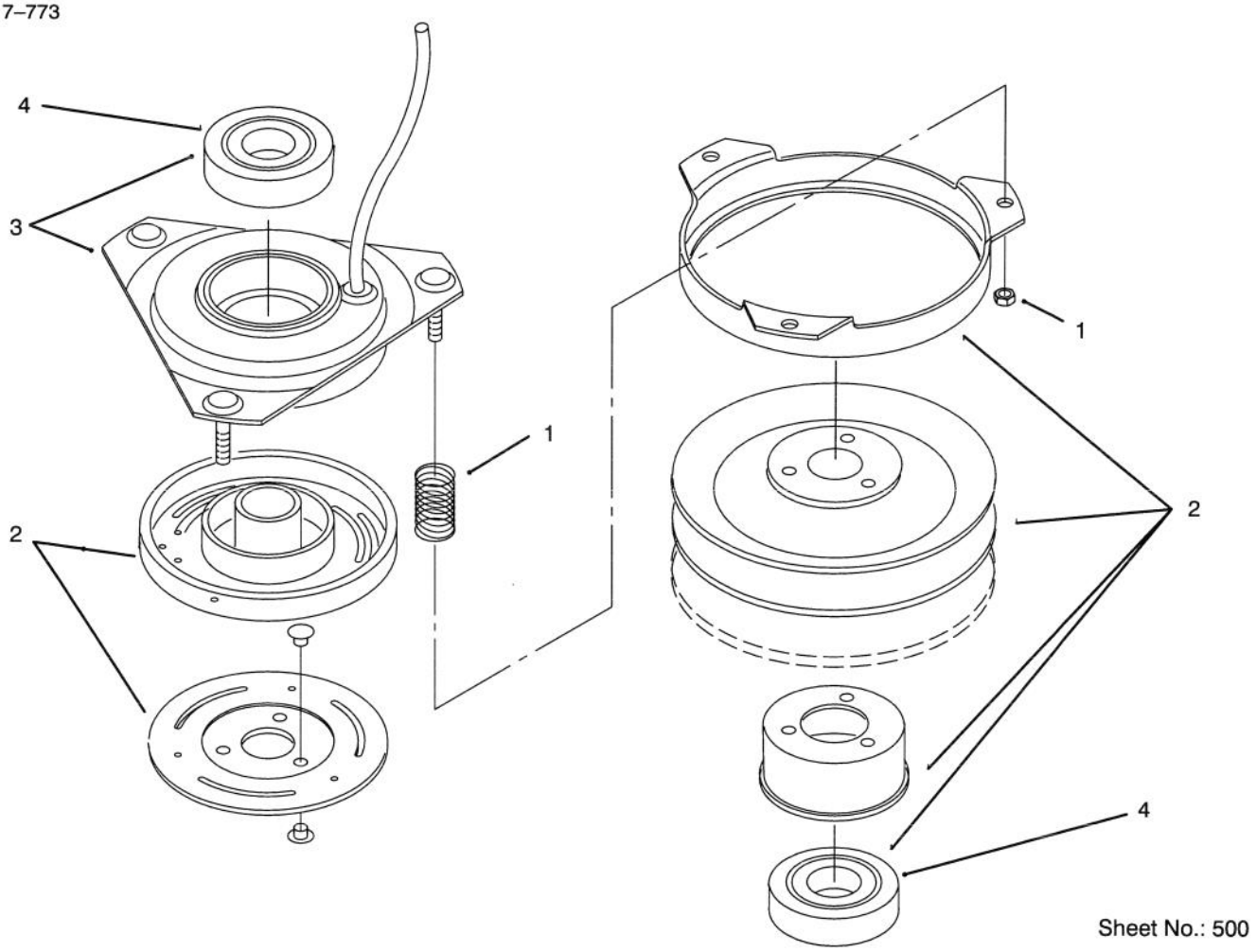


Sheet No.: 500

# Clutch

| Ref. No. | Part No. | Qty. | Description |
|---|---|---|---|
| 1 | 92–3014 | 3 | Nut & Spring ASM |
| 2 | 94–4930 | 1 | Rotor & Armature ASM (Only On: 72046) |
| 2* | 92–3015 | 1 | Rotor ASM W/Bearing (Only On: 72064) |
| 3 | 92–3016 | 1 | Field ASM W/Bearing) |
| 4 | 114064 | 2 | Bearing–Elec Clutch |

| Ref. No. | Part No. | Qty. | Description |
|---|---|---|---|

*Not Illustrated

Parts Identified in illustration but not in parts list are not used on this Model

3317–773

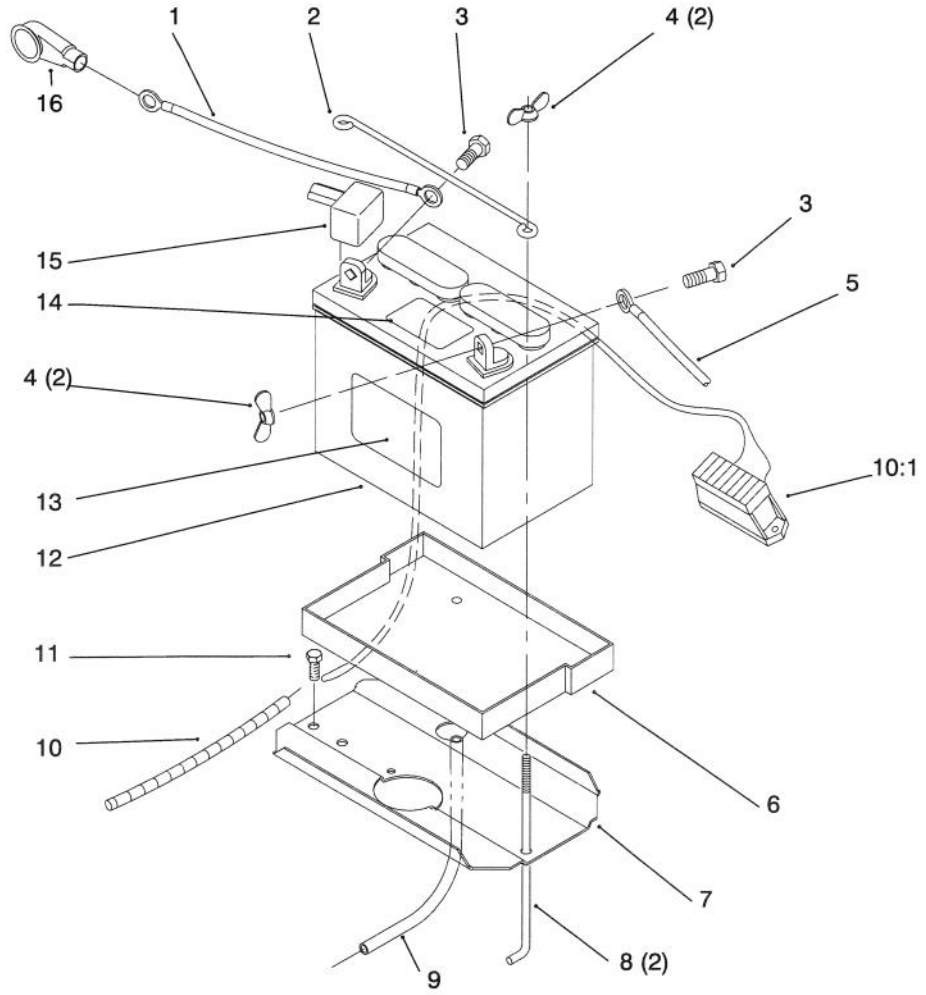


Sheet No.: 6

# Battery

| Ref. No. | Part No. | Qty. | Description |
|---|---|---|---|
| 1 | 92–6990 | 1 | Cable–Battery Red |
| 2 | 117316 | 1 | Rod–Battery Hold Down |
| 3 | 321–4 | 2 | Screw–HH |
| 4 | 32103–22 | 4 | Nut–Wing |
| 5 | 111078 | 1 | Cable–Battery Black |
| 6 | 106948 | 1 | Tray–Battery |
| 7 | 78–6820–03 | 1 | Plate–Battery |
| 8 | 109547 | 2 | Hook–Battery |
| 9 | 114720 | 1 | Tube–Battery Drain |
| 10 | 94–2862 | 1 | Harness–Wire |
| 11 | 32144–14 | 1 | Screw–HH |
| 12 | 105842 | 1 | Battery |
| 13 | 93–6668 | 1 | Decal–Battery Charge Ins (Only On: 72064) |
| 14 | 93–7276 | 1 | Decal–Danger (Only On: 72064) |
| 15 | 109553 | 1 | Boot–Battery Cable |

| Ref. No. | Part No. | Qty. | Description |
|---|---|---|---|
| | | | |

Parts Identified in illustration but not in parts list are not used on this Model

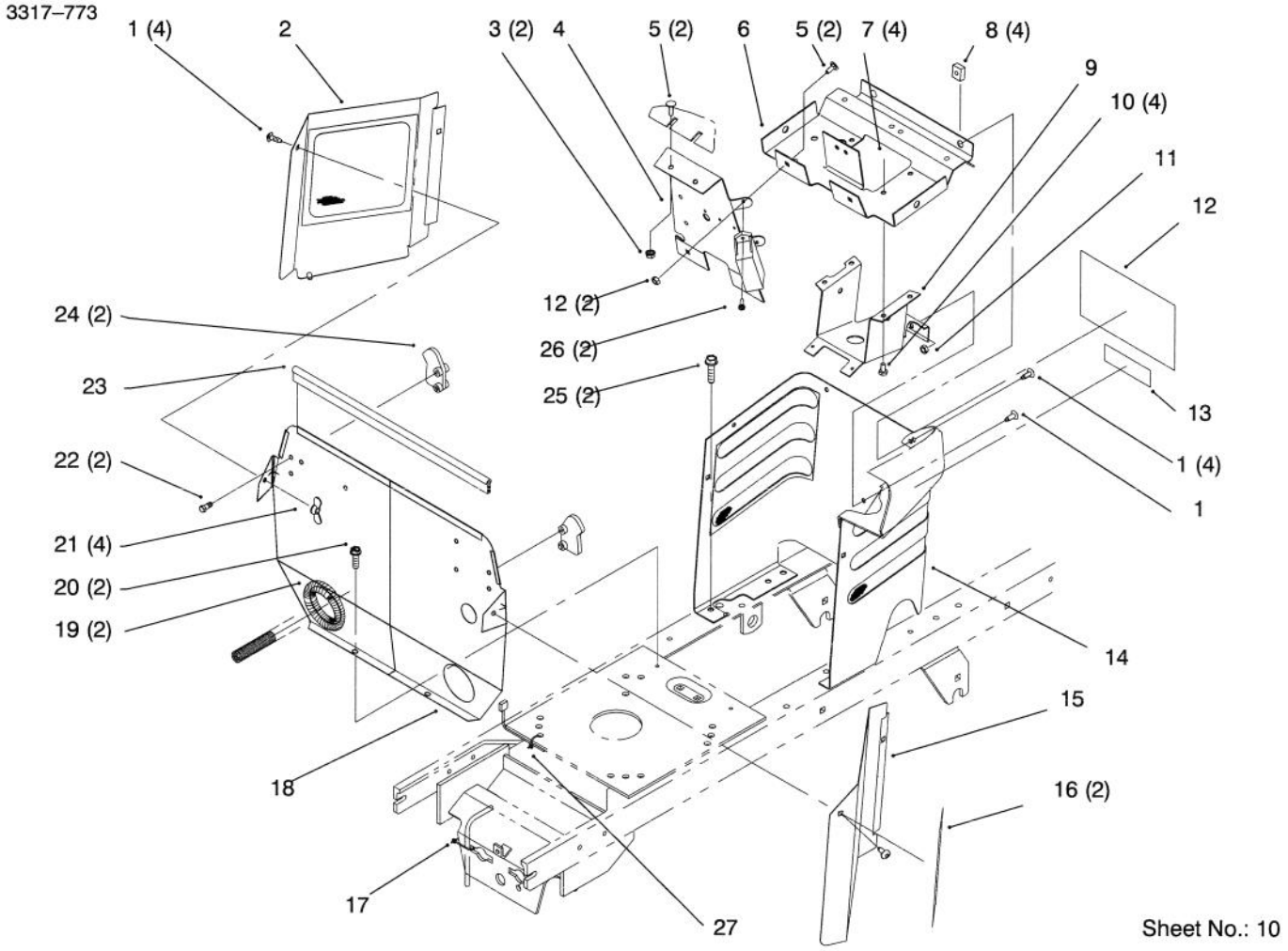


# Hoodstand and Firewall

| Ref. No. | Part No. | Qty. | Description |
|---|---|---|---|
| 1 | 92–7020 | 9 | Screw–TTH |
| 2 | 92–6937–03 | 1 | Cover–Side RH |
| 3 | 32149–2 | 2 | Nut–Hex Lock |
| 4 | 94–1712–03 | 1 | Panel–Support |
| 5 | 3229–11 | 4 | Bolt–CARR |
| 6 | 92–6859–03 | 1 | Support–Dash |
| 7 | 3296–8 | 4 | Nut–Lock |
| 8 | 92–6860 | 4 | Nut–Retainer |
| 9 | 92–6778–03 | 1 | Support–Column |
| 10 | 321–4 | 4 | Screw–HH |
| 11 | 3296–42 | 3 | Nut–Lock |
| 12 | 93–0302 | 1 | Decal–Slope/Park Brake (Only On: 72046) |
| 12 | 93–7313 | 1 | Decal–Danger (Only On: 72064) |
| 13 | 83–6620 | 1 | Decal–Instruction |
| 14 | 93–0486–03 | 1 | Hoodstand W/Decals (Only On: 72046) |
| 14 | 93–0488–03 | 1 | Hoodstand W/Decals (Only On: 72064) |
| 15 | 92–6936–03 | 1 | Cover–Side LH |
| 16 | 94–2973 | 2 | Decal–265–H |
| 17 | 614249 | 1 | Tie Strap |
| 18 | 94–1749–03 | 1 | Firewall |
| 19 | 24–7924 | 2 | Cover–Drive Shaft |

| Ref. No. | Part No. | Qty. | Description |
|---|---|---|---|
| 20 | 32144–4 | 2 | Screw–TAP |
| 21 | 32103–22 | 4 | Nut–Wing |
| 22 | 46–8093 | 2 | Screw–TAP |
| 23 | 93–1131 | 1 | Trim–Seal |
| 24 | 92–6960 | 2 | Latch–Hood |
| 25 | 32144–14 | 2 | Screw–HH |
| 26 | 32144–8 | 2 | Screw–PPH |
| 27 | 614249 | 1 | Tie Strap |

Parts Identified in illustration but not in parts list are not used on this Model

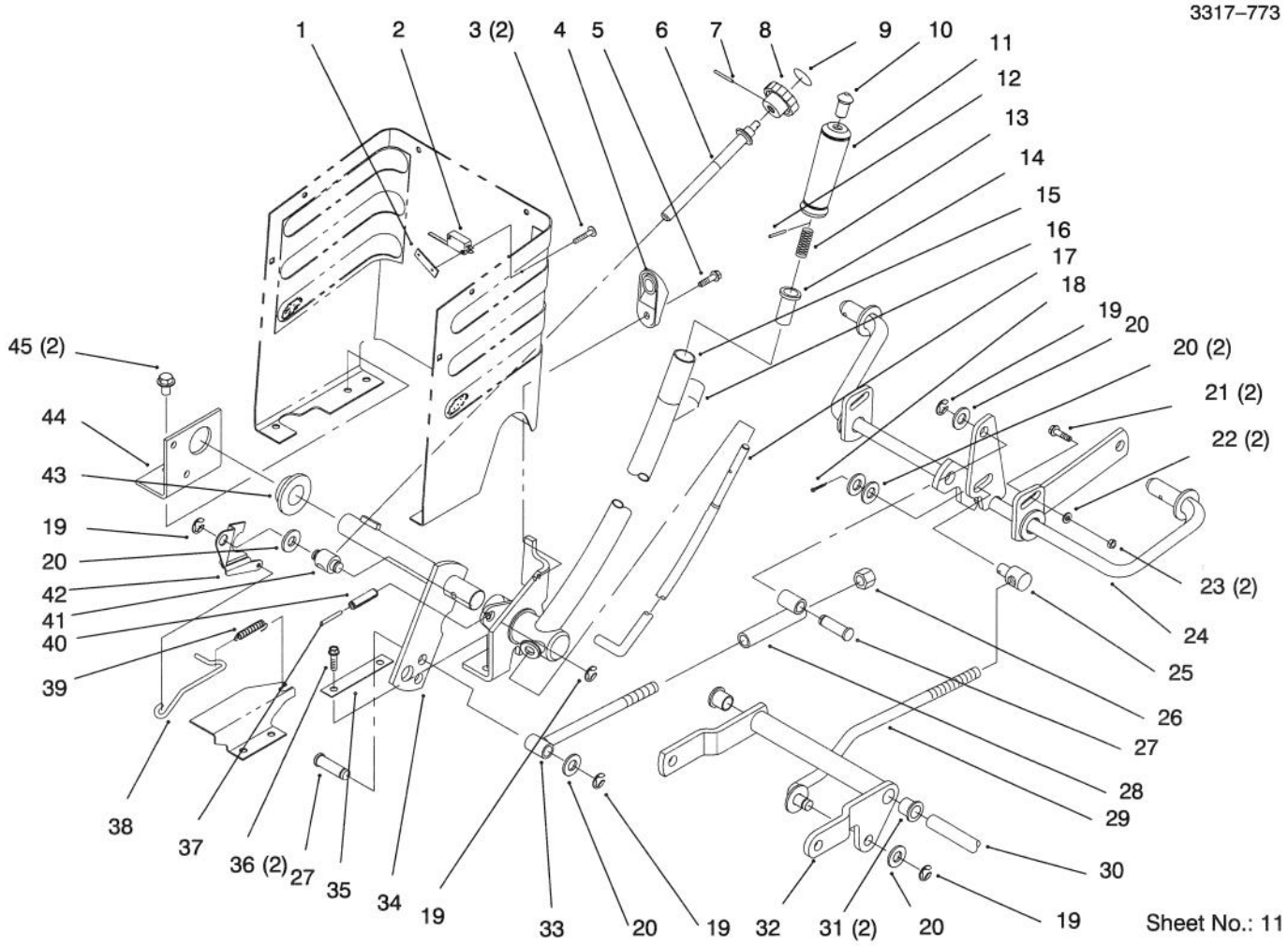


# Lift Lever and Height of Cut

| Ref. No. | Part No. | Qty. | Description |
|---|---|---|---|
| 1 | 3290–354 | 1 | Nut–Speed |
| 2 | 88–9930 | 1 | Switch–Micro |
| 3 | 147665 | 2 | Screw |
| 4 | 92–6794 | 1 | Wedge–HOC Adjust |
| 5 | 32144–4 | 1 | Screw–TAP |
| 6 | 92–6965 | 1 | Rod–HOC |
| 7 | 933141 | 1 | Pin–Spirol |
| 8 | 115593 | 1 | Knob |
| 9 | 78–9740 | 1 | Decal–HOC Knob |
| 10 | 92–6711 | 1 | Tip–Rod |
| 11 | 92–6710 | 1 | Grip–Handle |
| 12 | 933148 | 1 | Pin–Spirol |
| 13 | 3624 | 1 | Spring–Compression |
| 14 | 8130 | 1 | Retainer–Spring |
| 15 | 94–3761–03 | 1 | Lift Lever Wa |
| 16 | 112168 | 1 | Decal–Lift (Only On: 72046) |
| 16 | 93–7323 | 1 | Decal–Lift (Only On: 72064) |
| 17 | 92–6977–03 | 1 | Rod–Lift Lever |
| 18 | 3272–6 | 1 | Pin–Cotter |
| 19 | 32120–47 | 5 | Ring–Retaining |
| 20 | 3256–26 | 6 | Washer–Flt |
| 21 | 3231–25 | 2 | Screw–CARR |
| 22 | 3256–24 | 2 | Washer–Flat |
| 23 | 3296–39 | 2 | Nut–Lock |

| Ref. No. | Part No. | Qty. | Description |
|---|---|---|---|
| 24 | 79–3401–03 | 1 | Gage Shaft |
| 25 | 8870 | 1 | Trunnion |
| 26 | 3296–23 | 1 | Nut–Lock |
| 27 | 79–1250 | 2 | Pin |
| 28 | 78–7390 | 1 | Link |
| 29 | 78–2431 | 1 | Rod |
| 30 | 94–4944 | 1 | Shaft |
| 31 | 256–90 | 2 | Bushing–Flange |
| 32 | 92–6855–03 | 1 | Arm |
| 33 | 78–7360 | 1 | Rod |
| 34 | 94–3552–03 | 1 | Lift Arm W.a. |
| 35 | 78–6810–03 | 1 | Plate |
| 36 | 32144–14 | 2 | Screw–HH |
| 37 | 32121–103 | 1 | Pin–Spring |
| 38 | 92–6978 | 1 | Rod–HOC Indicator |
| 39 | 92–7007 | 1 | Spring–Extension |
| 40 | 32121–25 | 1 | Pin–Roll |
| 41 | 78–2140 | 1 | Trunnion |
| 42 | 92–6979 | 1 | Plate–HOC Gage |
| 43 | 106269 | 1 | Bearing–Flange |
| 44 | 93–0523–03 | 1 | Bracket–Pivot Linkage |
| 45 | 32144–14 | 2 | Screw–HH |

3317–773

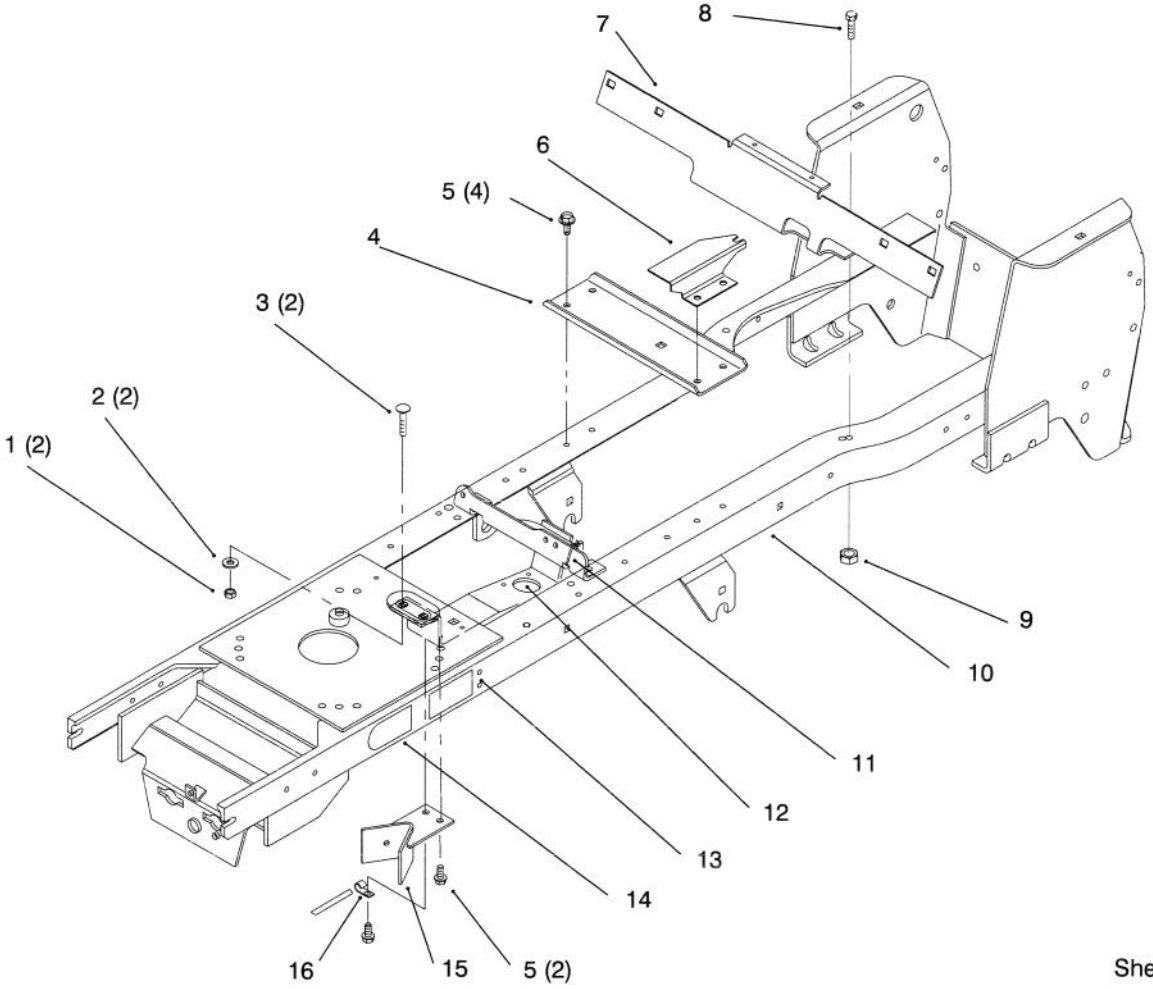


Sheet No.: 14

# Frame

| Ref. No. | Part No. | Qty. | Description |
|---|---|---|---|
| 1 | 3296–29 | 2 | Nut–Lock |
| 2 | 3256–23 | 2 | Washer–Flat |
| 3 | 3230–2 | 2 | Screw–CARR |
| 4 | 92–6868–03 | 1 | Bracket–Idler |
| 5 | 32144–14 | 6 | Screw–HH |
| 6 | 92–6964–03 | 1 | Bracket–HOC |
| 7 | 92–6674–03 | 1 | Support–Fender |
| 8 | 322–5 | 1 | Screw–HH |
| 9 | 3296–29 | 1 | Nut–Lock |
| 10 | 94–2668 | 1 | Frame Wa |
| 11 | 614249 | 1 | Tie Strap |
| 12 | 92–6992–03 | 1 | Bracket–Steering |
| 13 | 93–7324 | 2 | Decal–Installation (Only On: 72064) |
| 14 | 92–8747 | 2 | Decal–Attach A Matic |
| 15 | 78–2491–03 | 1 | Stop–PTO |
| 16 | 8830 | 1 | Retainer–"j" |

| Ref. No. | Part No. | Qty. | Description |
|---|---|---|---|

Parts Identified in illustration but not in parts list are not used on this Model

3317–773

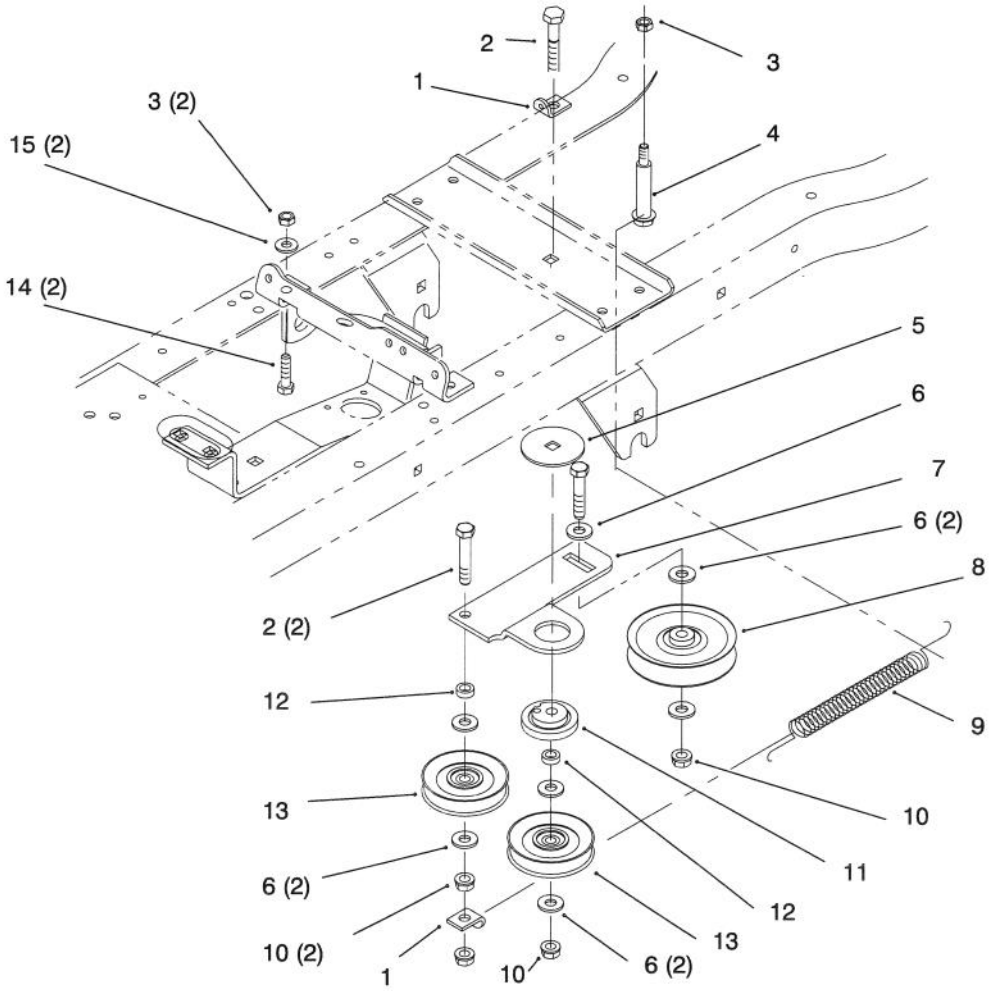


Sheet No.: 3

# Hydro Drive Components

| Ref. No. | Part No. | Qty. | Description |
|---|---|---|---|
| 1 | 2534 | 2 | Clip–Spring |
| 2 | 323–10 | 3 | Screw–HH |
| 3 | 3296–29 | 3 | Nut–Lock |
| 4 | 88–4590 | 1 | Bolt–Shoulder |
| 5 | 111419 | 1 | Washer–Bearing |
| 6 | 3256–24 | 7 | Washer–Flat |
| 7 | 92–6900 | 1 | Arm–Idler |
| 8 | 92–7101 | 1 | Pulley–Flat |
| 9 | 79–7530 | 1 | Spring–Extension |
| 10 | 3296–59 | 4 | Nut–Lock |
| 11 | 111418 | 1 | Bushing |
| 12 | 93–3658 | 2 | Spacer |
| 13 | 92–7102 | 2 | Pulley–Idler |
| 14 | 322–5 | 2 | Screw–HH |
| 15 | 3256–23 | 2 | Washer–Flat |

| Ref. No. | Part No. | Qty. | Description |
|---|---|---|---|
| | | | |

3317–773

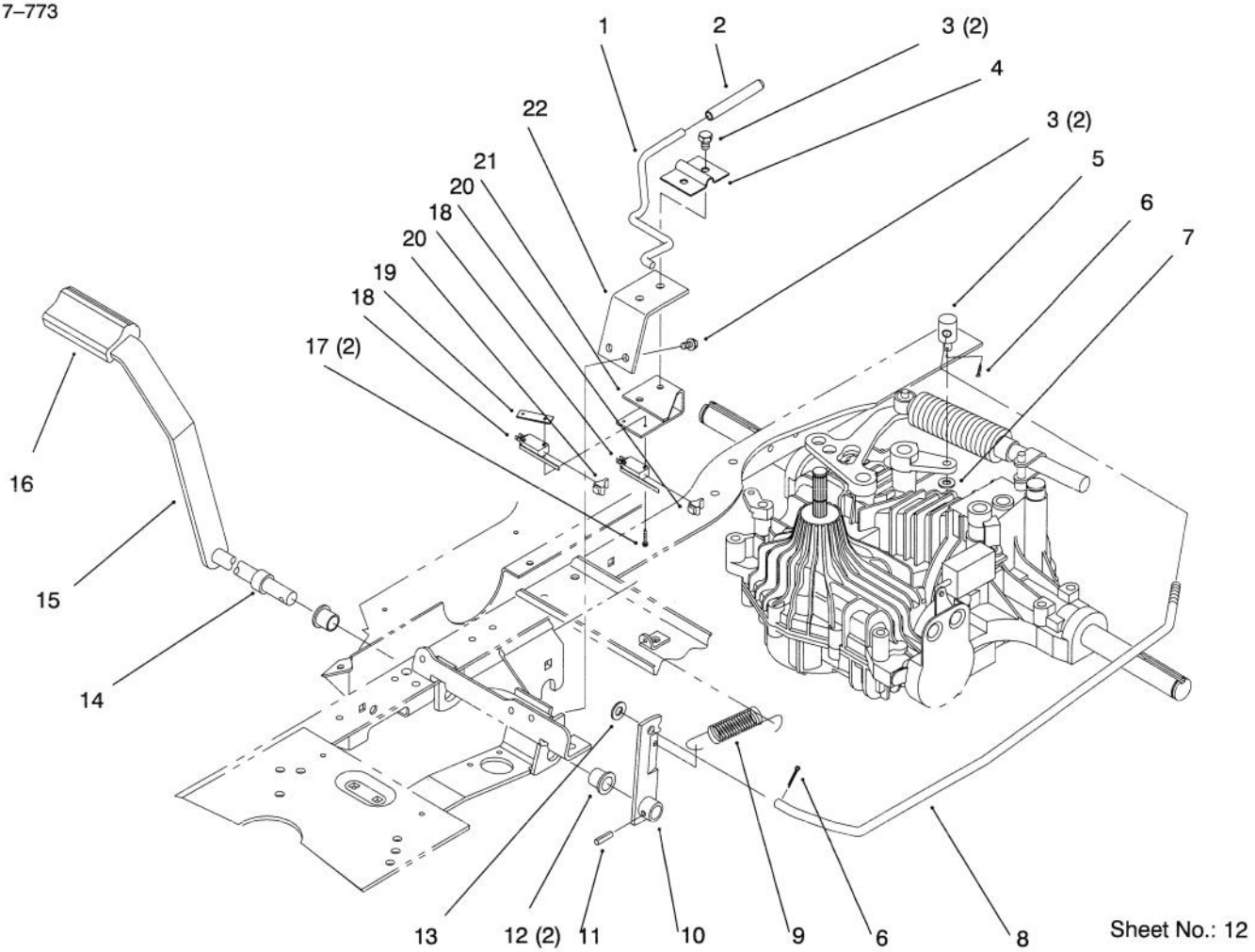


Sheet No.: 12

# Hydro Brake

| Ref. No. | Part No. | Qty. | Description |
|---|---|---|---|
| 1 | 93–3167 | 1 | Rod–Park Brake |
| 2 | 92–7009 | 1 | Grip–Parking Brake |
| 3 | 32144–14 | 4 | Screw–HH |
| 4 | 92–7000–03 | 1 | Bracket–Park Brake |
| 5 | 92–6968 | 1 | Trunnion–Brake |
| 6 | 3272–6 | 2 | Pin–Cotter |
| 7 | 3256–23 | 1 | Washer–Flat |
| 8 | 92–6988 | 1 | Rod–Brake |
| 9 | 93–0540 | 1 | Spring–Extension |
| 10 | 94–1722–03 | 1 | Lever–Brake |
| 11 | 32121–69 | 1 | Pin–Spring |
| 12 | 256–90 | 2 | Bushing–Flange |
| 13 | 3256–24 | 1 | Washer–Flat |
| 14 | 92–6982 | 1 | Spacer–Brake |
| 15 | 94–4233–03 | 1 | Brake Pedal Wa |
| 16 | 65–2920 | 1 | Pad–Pedal |
| 16 | 92–6949 | 1 | Tube–Brake |
| 16 | 94–1720 | 1 | Lever–Brake |
| 17 | 147665 | 2 | Screw |
| 18 | 88–9932 | 1 | Switch – Micro |
| 19 | 3290–354 | 1 | Nut–Speed |
| 20 | 93–3240 | 1 | Seal–Plunger |
| 21 | 93–0520–03 | 1 | Bracket–Micro Sw |
| 22 | 92–7004–03 | 1 | Support–Park Brake |

| Ref. No. | Part No. | Qty. | Description |
|---|---|---|---|

Parts Identified in illustration but not in parts list are not used on this Model

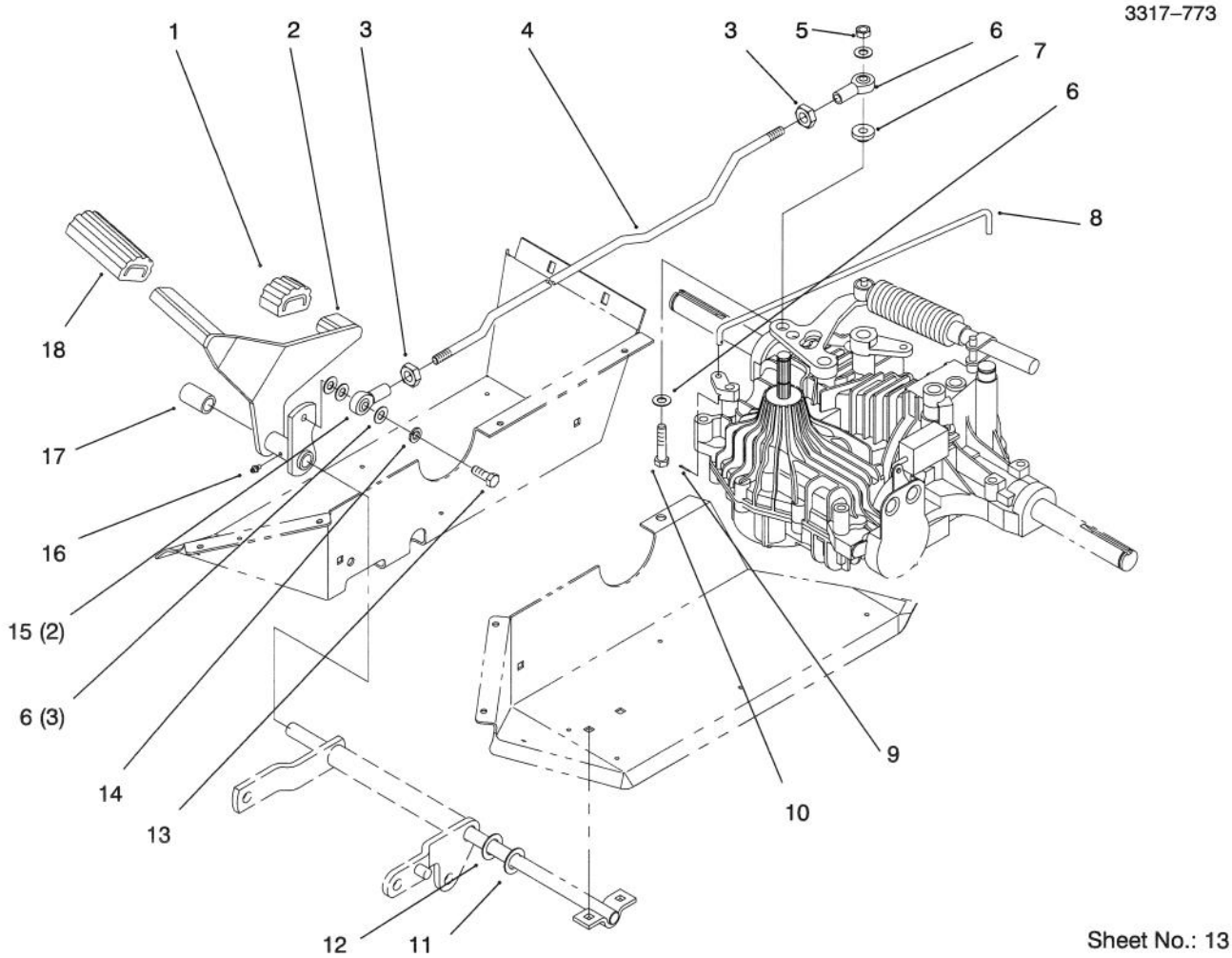


Sheet No.: 13

# Hydro Control

| Ref. No. | Part No. | Qty. | Description |
|---|---|---|---|
| 1 | 92–6903 | 1 | Pad–Pedal Reverse |
| 2 | 92–6913–03 | 1 | Pedal–Hydro |
| 3 | 3220–3 | 2 | Nut–Hex Jam |
| 4 | 92–7018 | 1 | Rod |
| 5 | 3296–39 | 1 | Nut–Lock |
| 6 | 3256–24 | 5 | Washer–Flat |
| 7 | 92–6962 | 1 | Bushing |
| 8 | 92–6970 | 1 | Rod–Bypass |
| 9 | 3272–2 | 1 | Pin–Cotter |
| 10 | 323–10 | 1 | Screw–HH |
| 11 | 94–6875 | 1 | Washer–Flat |
| 12 | 9202154 | 1 | Washer–Flat |
| 13 | 323–7 | 1 | Screw–HH |
| 14 | 3253–5 | 1 | Washer–Lock |
| 15 | 92–7008 | 2 | Rod End |
| 16 | 302–26 | 1 | Fitting–Grease |
| 17 | 92–6966 | 1 | Spacer–Hydro Pedal |
| 18 | 92–6902 | 1 | Pad–Pedal Forward |

| Ref. No. | Part No. | Qty. | Description |
|---|---|---|---|
| | | | |

3317–773

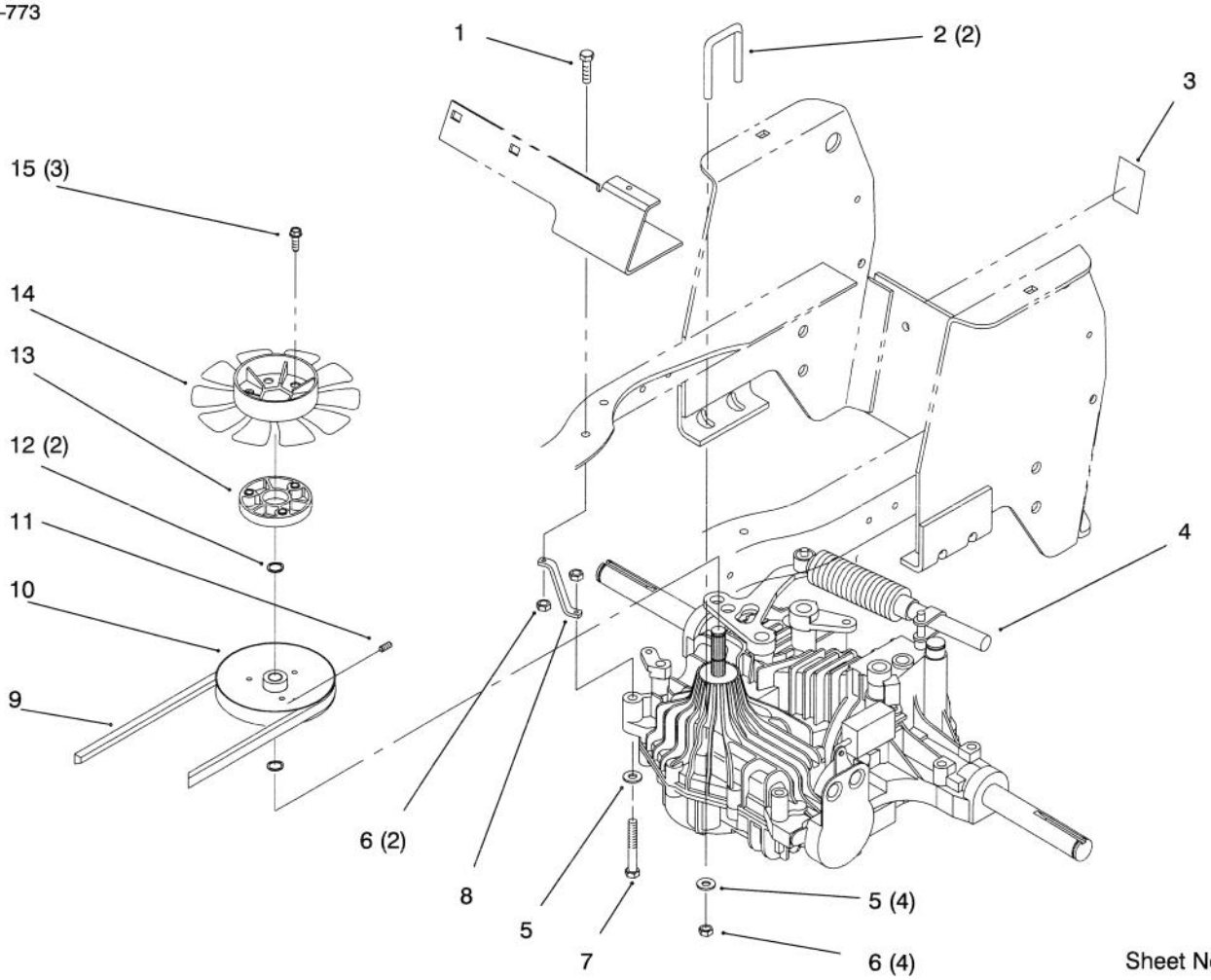


Sheet No.: 15

# Hydro Transaxle

| Ref. No. | Part No. | Qty. | Description |
|---|---|---|---|
| 1 | 322–6 | 1 | Screw–HH |
| 2 | 92–6769 | 2 | U–Bolt |
| 3 | 92–6726 | 1 | Decal–Hydro Valve (Only On: 72046) |
| 3 | 92–7090 | 1 | Decal–Bypass (Only On: 72064) |
| 4 | 94–4205 | 1 | Transaxle–Hydro |
| 5 | 3256–23 | 5 | Washer–Flat |
| 6 | 3296–29 | 6 | Nut–Lock |
| 7 | 322–12 | 1 | Screw HH |
| 8 | 93–0546–03 | 1 | Strap–Torque |
| 9 | 92–6718 | 1 | Belt–Hydro |
| 10 | 92–6686 | 1 | Pulley |
| 11 | 3245–32 | 1 | Screw–Set |
| 12 | 936118 | 2 | Snap Ring |
| 13 | 92–6943 | 1 | Spacer–Fan |
| 14 | 92–6742 | 1 | Fan |
| 15 | 49–2040 | 3 | Screw–HH |

| Ref. No. | Part No. | Qty. | Description |
|---|---|---|---|

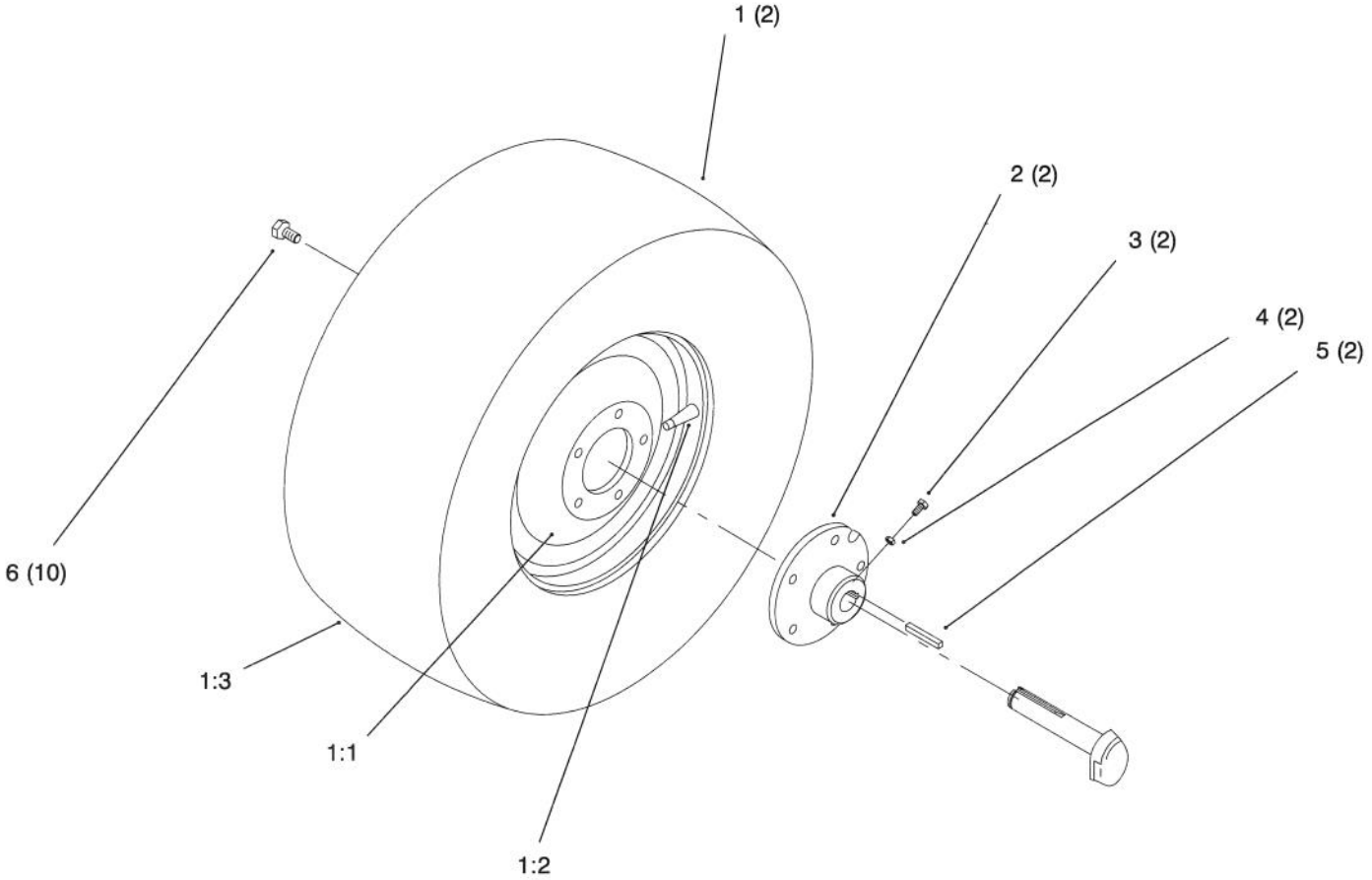


Sheet No.: 24

# Rear Wheel

| Ref. No. | Part No. | Qty. | Description |
|---|---|---|---|
| ☆1 | | 2 | Wheel & Tire ASM |
| 1:1 | 78–1221 | 2 | Wheel |
| 1:2 | 5108 | 2 | Valve–Tire Tubeless |
| 1:3 | 116744 | 2 | Tire |
| 2 | 93–3659–03 | 2 | Hub–Wheel |
| 3 | 3243–5 | 4 | Screw–Set |
| 4 | 3218–3 | 4 | Nut–HJ |
| 5 | 5–1336 | 2 | Key |
| 6 | 83–2720 | 10 | Bolt–Lug |

| Ref. No. | Part No. | Qty. | Description |
|---|---|---|---|

☆ Not serviced

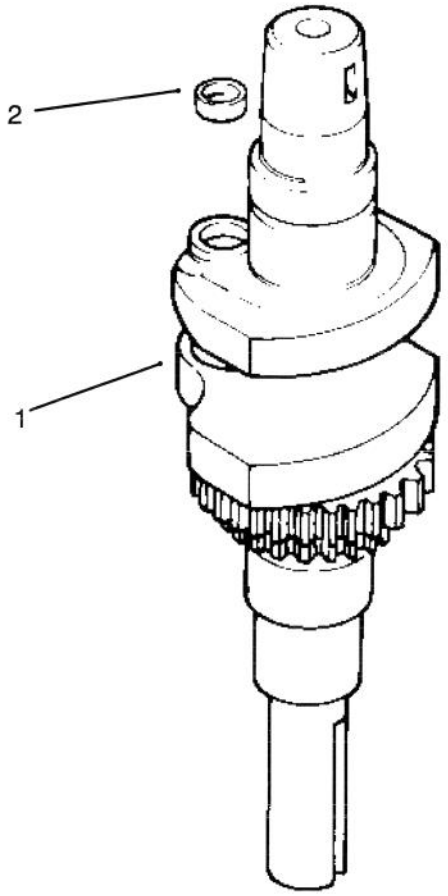


Sheet No.: 101
C–1948

# Crankshaft

| Ref. No. | Part No. | Qty. | Description |
|---|---|---|---|
| 1 | 12 014 02 | 1 | Crankshaft |
| 2 | 12 139 01 | 1 | Plug–Cup |

| Ref. No. | Part No. | Qty. | Description |
|---|---|---|---|

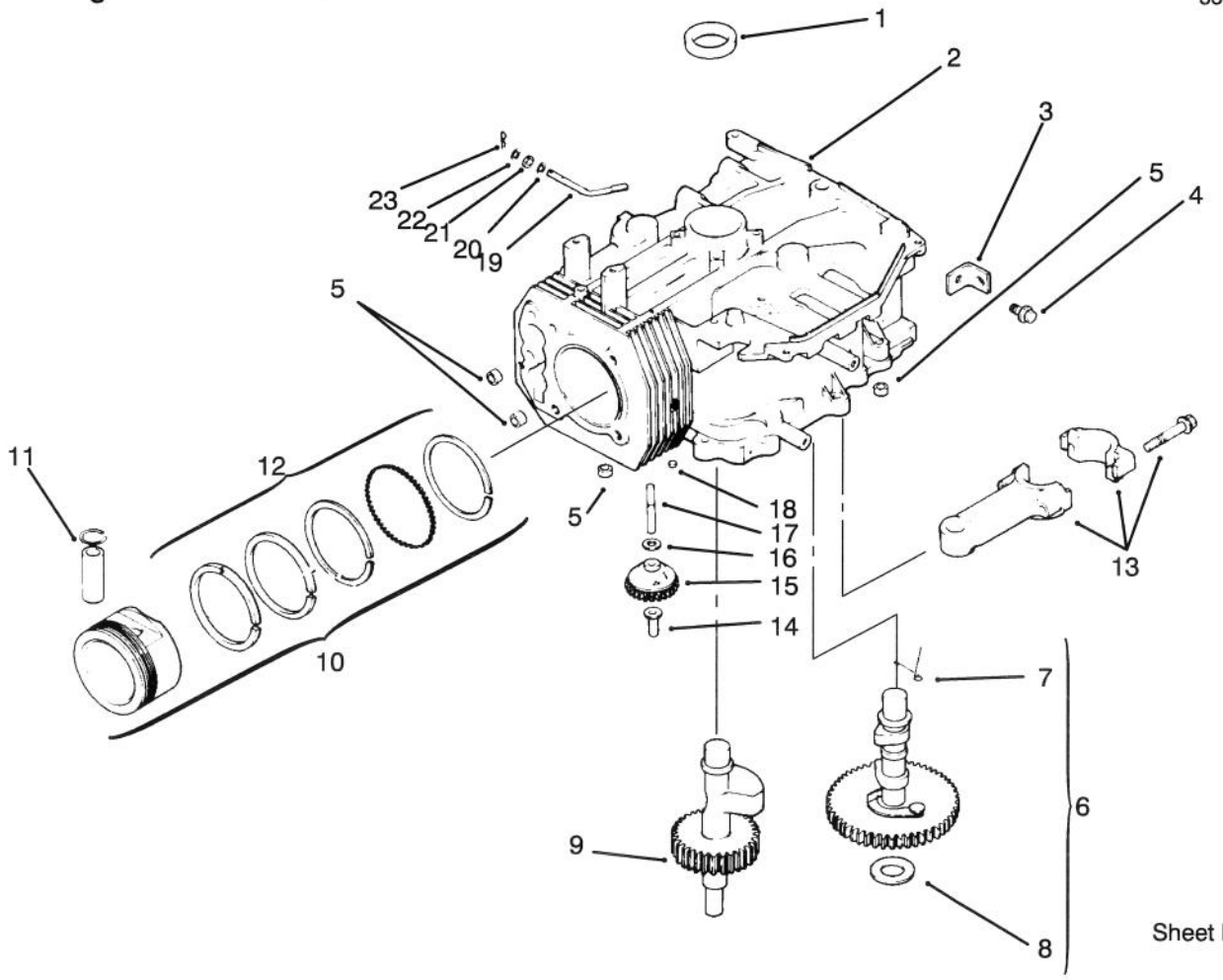


Sheet No.: 102
C–1949

# Crankcase

| Ref. No. | Part No. | Qty. | Description |
|---|---|---|---|
| 1 | 12 032 03 | 1 | Seal–Crankshaft |
| *2 | 12 522 19 | 1 | Block–Short |
| 3 | 12 445 02 | 1 | Strap–Lifting |
| 4 | M–0839025 | 1 | Screw M8x1.25x22 |
| 5 | 12 380 03 | 4 | Dowel–Locating |
| 6 | 12 010 02 | 1 | Camshaft ASM Incl 7 |
| †7 | 12 089 18 | 1 | Spring–Actuating |
| †8 | 12 422 07 | 1 | Shim–Camshaft A/R |
| †8 | 12 422 08 | 1 | Shim–Camshaft A/R |
| †8 | 12 422 09 | 1 | Shim–Camshaft A/R |
| †8 | 12 422 10 | 1 | Shim–Camshaft A/R |
| †8 | 12 422 11 | 1 | Shim–Camshaft A/R |
| †8 | 12 422 12 | 1 | Shim–Camshaft A/R |
| †8 | 12 422 13 | 1 | Shim–Camshaft A/R |
| 9 | 12 144 19 | 1 | Shaft–Balance |
| 10 | 12 874 07 | 1 | Piston ASM STD Incl 11–2 |
| 10 | 12 874 08 | 1 | Piston ASM .25 Incl 11–2 |
| 10 | 12 874 09 | 1 | Piston ASM .50 Incl 11–2 |
| †11 | 12 018 02 | 2 | Retainer–Piston Pin |
| 12 | 12 018 07 | 1 | Ring Set STD |
| 12 | 12 018 08 | 1 | Ring Set .25 |
| 12 | 12 018 09 | 1 | Ring Set .50 |
| 13 | 12 067 01 | 1 | Connecting Rod STD |

| Ref. No. | Part No. | Qty. | Description |
|---|---|---|---|
| 13 | 12 067 02 | 1 | Connecting Rod .25 |
| 14 | 12 380 01 | 1 | Pin–Governor Regulating |
| 15 | 12 043 05 | 1 | Gear–Governor ASM |
| 16 | M–0631005 | 1 | Washer–Governor |
| 17 | 12 144 02 | 1 | Shaft–Governor Gear |
| 18 | 52 139 09 | 1 | Plug–Cup |
| 19 | 12 144 01 | 1 | Shaft–Governor Cross |
| 20 | Sm–0631015 | 1 | Washer–Governor Shaft |
| 21 | 12 032 01 | 1 | Seal–Governor Shaft |
| 22 | X–25–102 | 1 | Washer–Flat |
| 23 | 12 380 04 | 1 | Pin–Governor Hitch |
| * | 12 722 59 | 1 | Gasket Set |

* Not illustrated
† Included in a service kit or in an assembly

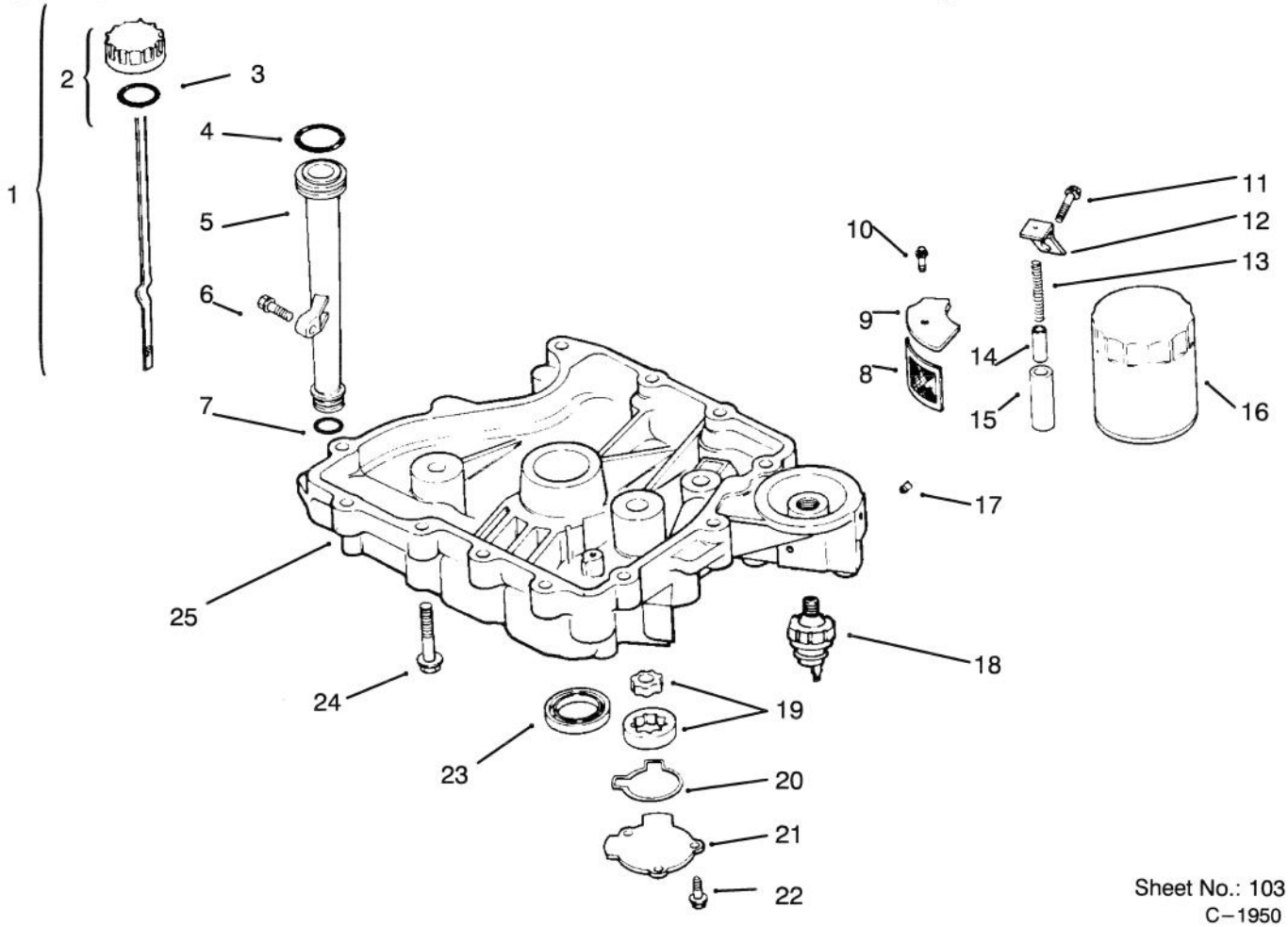


Sheet No.: 103
C–1950

# Oil Pan / Lubrication

| Ref. No. | Part No. | Qty. | Description |
|---|---|---|---|
| 1 | 12 038 01 | 1 | Dipstick Incl 2–3 |
| †2 | 25 755 13 | 1 | Kit–Oil Cap Incl 3 |
| †3 | 12 153 03 | 1 | O Ring–Fill Cap |
| 4 | 12 153 02 | 1 | O Ring–Upper Fill Tube |
| 5 | 12 123 04 | 1 | Tube–Oil Fill |
| 6 | Sm–0545020 | 1 | Screw M5x0.8x20 |
| 7 | 12 153 01 | 1 | O Ring–Lower Fill Tube |
| 8 | 12 162 02 | 1 | Screen–Oil Pickup |
| 9 | 12 096 03 | 1 | Cover–Oil Pickup Screen |
| 10 | M–0545016 | 1 | Screw M5x0.8x16 |
| 11 | M–1039025 | 1 | Screw M10x1.5x25 |
| 12 | 12 126 02 | 1 | Bracket–Oil Pump Relief |
| 13 | 12 089 03 | 1 | Spring–Oil Relief Valve |
| 14 | 12 462 01 | 1 | Piston–Oil Relief Valve |
| 15 | 12 208 01 | 1 | Body–Oil Relief Valve |
| 16 | 12 050 01 | 1 | Filter–Oil |
| 17 | X–75–10 | 2 | Plug–SH 3/8 NPTF |
| 18 | 52 099 06 | 1 | Switch–Oil Pressure |
| 19 | 12 393 01 | 1 | Pump–Oil |
| 20 | 12 032 04 | 1 | O Ring–Oil Pump Cover |
| 21 | 12 096 02 | 1 | Cover–Oil Pump |

| Ref. No. | Part No. | Qty. | Description |
|---|---|---|---|
| 22 | M–0545016 | 3 | Screw M5x0.8x16 |
| 23 | 12 032 03 | 1 | Seal–Crankshaft |
| 24 | Sm–0838045 | 12 | Screw M8x1.25x45 |
| 25 | 12 199 09 | 1 | Pan–Oil |
| * | 52 518 21 | 1 | Lead–Oil Switch W/Tabs |

† Included in a service kit or in an assembly
* Not illustrated

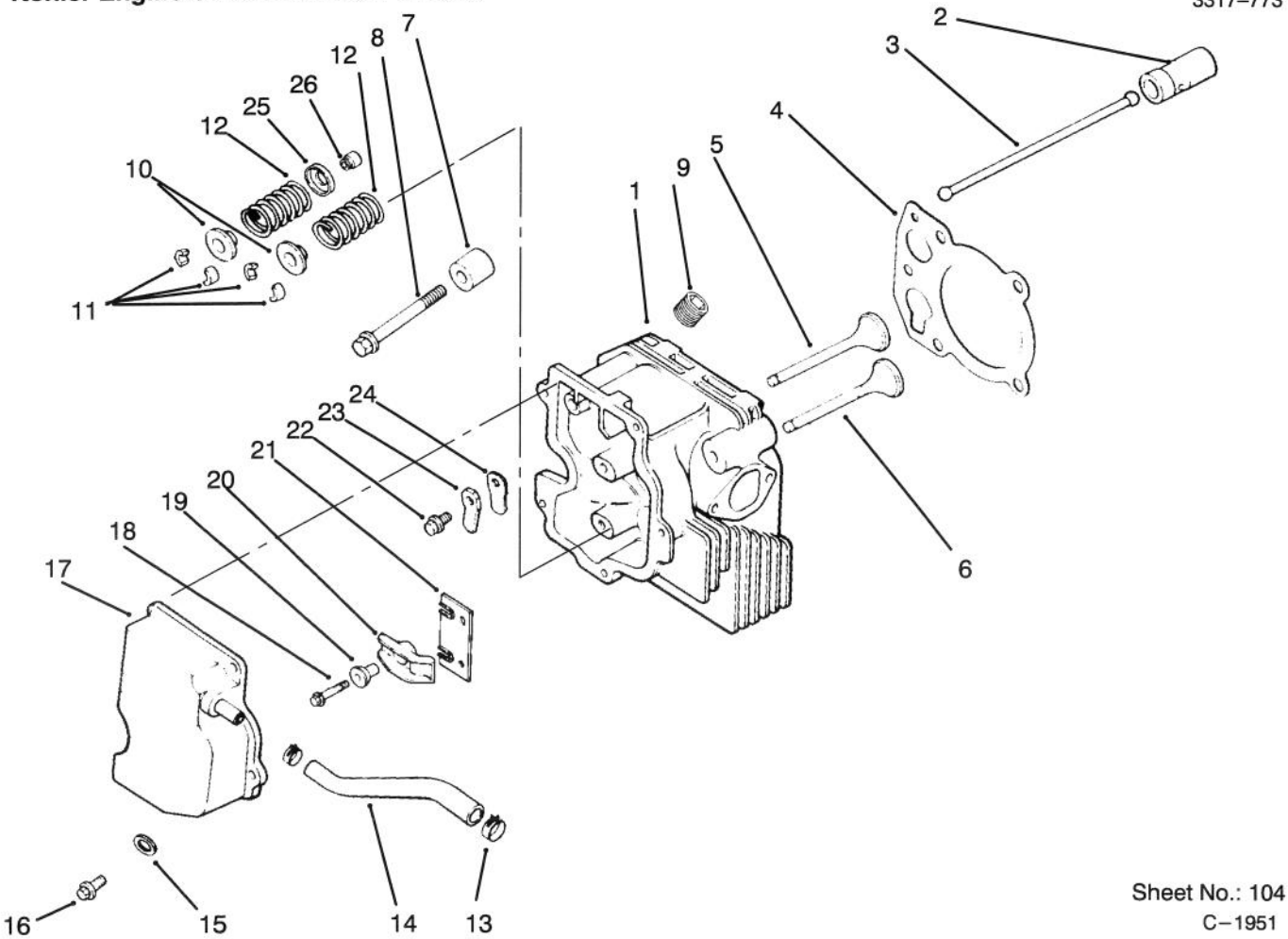


Sheet No.: 104
C–1951

# Cylinder Head / Valve / Breather

| Ref. No. | Part No. | Qty. | Description |
|---|---|---|---|
| 1 | 12 318 09 | 1 | Cylinder Head |
| 2 | 12 351 01 | 2 | Lifter–Valve |
| 3 | 12 411 01 | 2 | Rod–Push |
| 4 | 12 041 08 | 1 | Gasket–Cylinder Head |
| 5 | 12 017 01 | 1 | Valve–Intake STD |
| 5 | 12 017 02 | 1 | Valve–Intake .25 |
| 6 | 12 016 01 | 1 | Valve–Exhaust STD |
| 6 | 12 016 02 | 1 | Valve–Exhaust .25 |
| 7 | 12 112 13 | 1 | Spacer–Head Bolt Exhaust |
| 8 | 12 086 15 | 5 | Screw M10x1.5x80 |
| 9 | X–75–23 | 1 | Plug |
| 10 | 12 173 01 | 2 | Cap–Valve Spring |
| 11 | 12 755 03 | 2 | Kit–Retainer |
| 12 | 12 089 01 | 2 | Spring–Valve |
| 13 | X–426–9 | 2 | Clamp–Hose |
| 14 | 12 326 03 | 1 | Hose–Breather |
| 15 | 12 468 05 | 1 | Washer–Flat |
| 16 | Sm–0645020 | 5 | Screw M6x1.0x20 |
| 17 | 12 096 07 | 1 | Cover–Valve W/Nipple |
| 18 | M–0640034 | 2 | Screw M6x1.0x34 |
| 19 | 24 194 01 | 2 | Ball–Rocker Pivot |
| 20 | 24 186 01 | 2 | Arm–Rocker |
| 21 | 12 146 13 | 1 | Plate–Guide |
| 22 | M–0545010 | 1 | Screw M5x0.8x10 |

| Ref. No. | Part No. | Qty. | Description |
|---|---|---|---|
| 23 | 12 018 01 | 1 | Retainer–Breather Reed |
| 24 | 24 402 02 | 1 | Reed–Breather |
| 25 | 235011 | 2 | Retainer–Spring |
| 26 | 24 032 05 | 2 | Seal–Valve Stem |
| * | 12 755 60 | 1 | Kit–Cylinder Head Incl 1–6 & 18–21 |

* Not illustrated

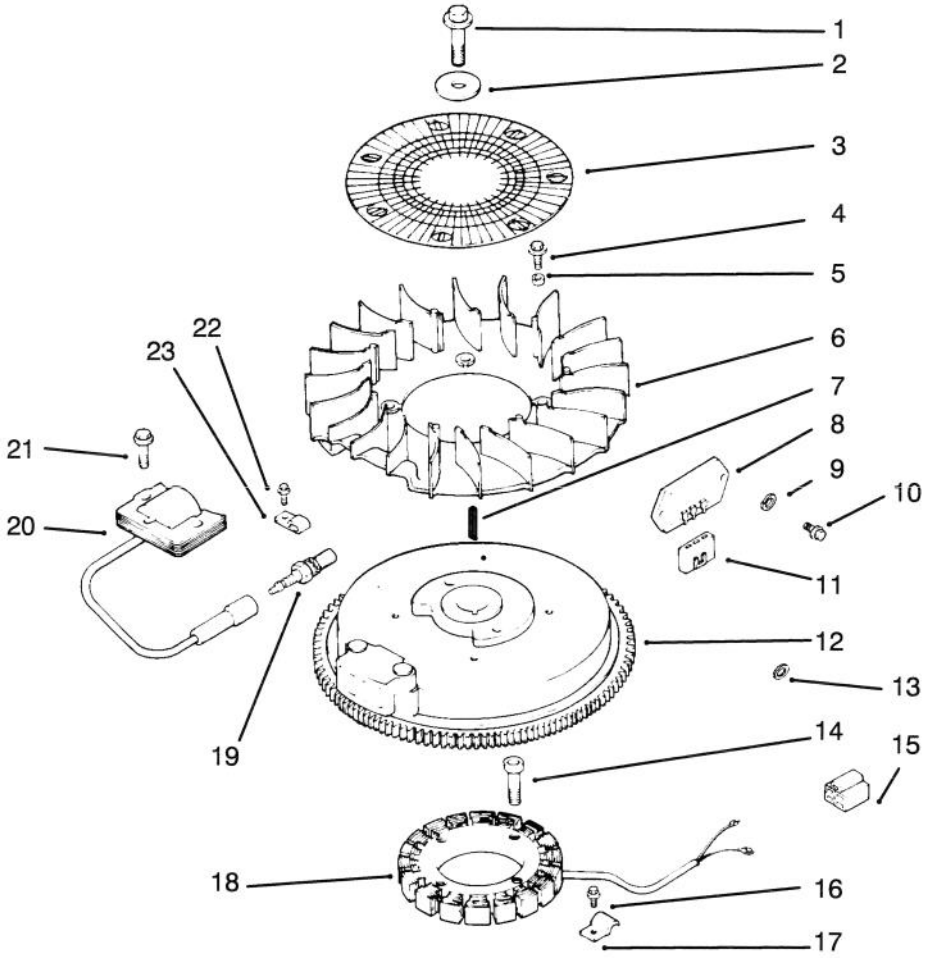


Sheet No.: 105
C–1952

# Ignition / Electrical

| Ref. No. | Part No. | Qty. | Description |
|---|---|---|---|
| 1 | 12 086 14 | 1 | Screw–Flywheel Mounting |
| 2 | 12 468 03 | 1 | Washer–Flywheel Screw |
| 3 | 24 162 03 | 1 | Screen–Grass |
| 4 | M–0639016 | 4 | Screw M6x1.0x16 |
| 5 | 12 112 01 | 4 | Spacer–Fan |
| 6 | 12 157 02 | 1 | Fan |
| 7 | X–42–15 | 1 | Key |
| 8 | 41 403 09 | 1 | Rectifier–Regulator |
| 9 | X–22–11 | 1 | Washer–Lock |
| 10 | M–0639016 | 2 | Screw M6x1.0x16 |
| 11 | 236602 | 1 | Connector–Regulator |
| 12 | 12 025 16 | 1 | Flywheel ASM |
| 13 | X–25–5 | 1 | Washer–Flat |
| 14 | M–0548025 | 4 | Screw M5x0.8x25 |
| 15 | 48 155 01 | 1 | Connector–5 Contact |
| 16 | M–0545010 | 1 | Screw M5x0.8x10 |
| 17 | 12 154 02 | 1 | Clip–Stator Harness |
| 18 | 24 085 01 | 1 | Stator–15 Amp |
| 19 | 12 132 02 | 1 | Spark Plug |
| 20 | 12 584 01 | 1 | Module–Ignition |
| 21 | Sm–0545020 | 2 | Screw M5x0.8x20 |
| 22 | M–0545010 | 1 | Screw M5x0.8x10 |
| 23 | X–728–1 | 1 | Clip–Kill Lead |
| * | 12 518 01 | 1 | Lead–White |

| Ref. No. | Part No. | Qty. | Description |
|---|---|---|---|
| * | 25 518 05 | 1 | Lead–Black |
| * | 25 518 29 | 1 | Lead–Black |

* Not illustrated

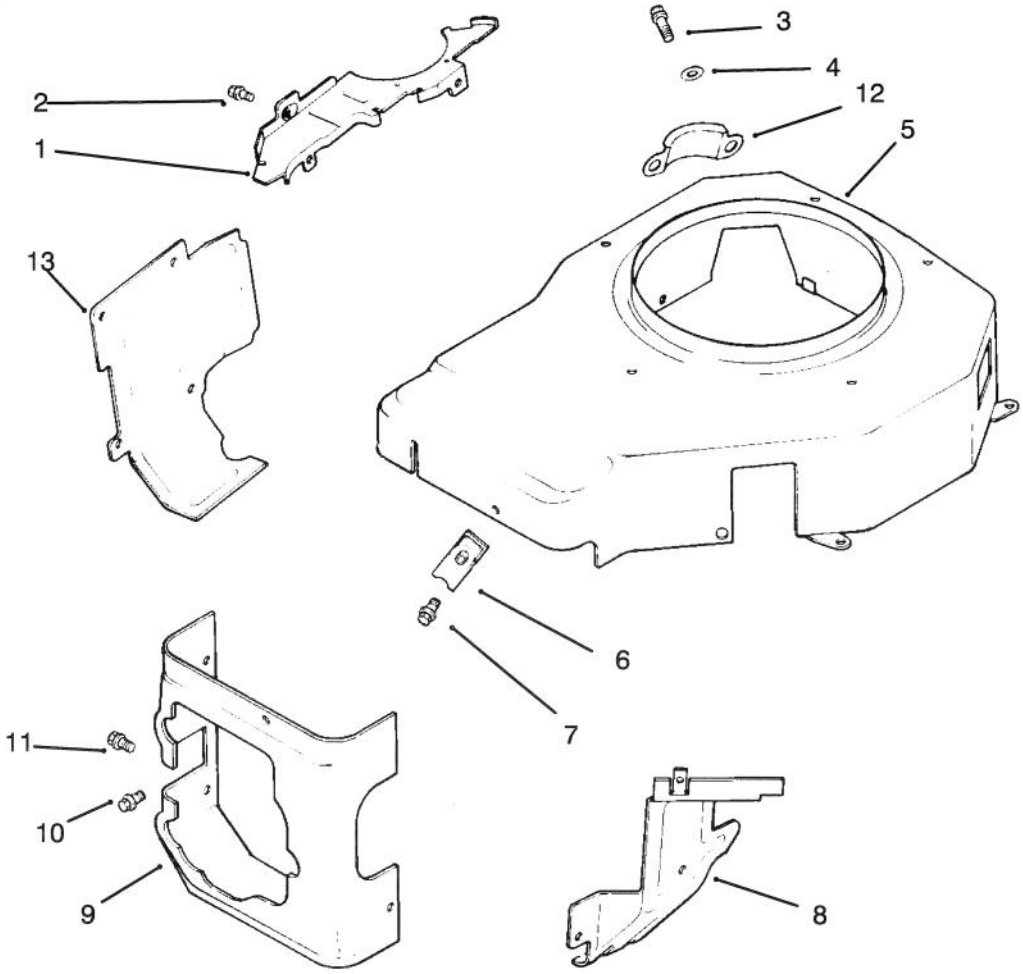


Sheet No.: 106
C–1953

# Blower Housing & Baffles

| Ref. No. | Part No. | Qty. | Description |
|---|---|---|---|
| 1 | 12 146 07 | 1 | Plate–Blower Housing |
| 2 | M–0545010 | 8 | Screw M5x0.8x10 |
| 3 | 24 086 18 | 2 | Screw |
| 4 | X–25–92 | 2 | Washer–Flat |
| 5 | 12 027 32 | 1 | Housing–Blower |
| 6 | 25 154 02 | 3 | Clip |
| 7 | Sm–0545020 | 3 | Screw M5x0.8x20 |
| 8 | 12 063 05 | 1 | Baffle–Carburetor |
| 9 | 12 063 08 | 1 | Baffle–Cylinder Head |
| 10 | M–0645016 | 2 | Screw–HH M6x1.0x16 |
| 11 | M–0645020 | 1 | Screw–HH M6x1.0x20 |
| 12 | 24 096 05 | 1 | Cover–Pinion |
| 13 | 12 063 01 | 1 | Baffle–Cylinder Barrel |

| Ref. No. | Part No. | Qty. | Description |
|---|---|---|---|
| | | | |

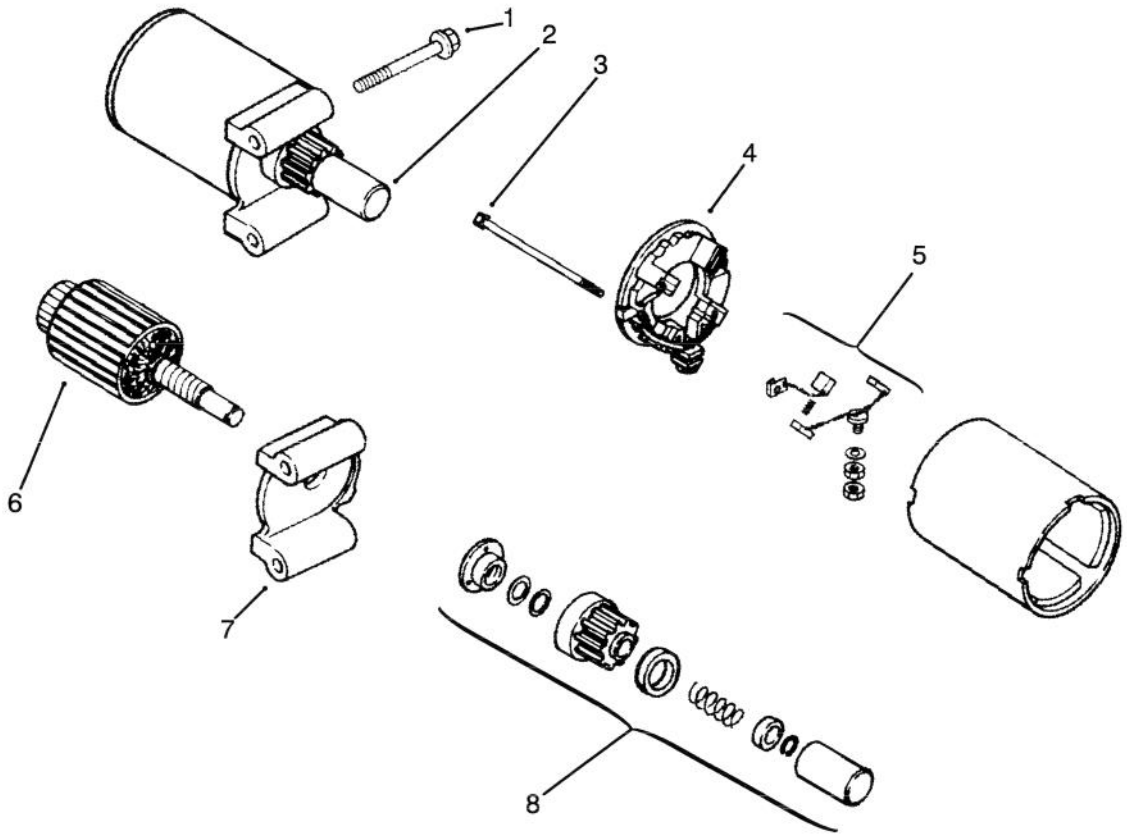


Sheet No.: 107
C–

# Starting System

| Ref. No. | Part No. | Qty. | Description |
|---|---|---|---|
| 1 | M0839070 | 2 | Screw M8x1.25x70 |
| 2 | 12 098 13 | 1 | Starter ASM Incl 3–8 |
| †3 | 12 086 25 | 1 | Screw–HF |
| †4 | 12 227 11 | 1 | Cap–Commutator Incl 5 |
| †5 | 82 755 28 | 1 | Kit–Brush And Spring |
| †6 | 12 170 03 | 1 | Armature–Starter |
| †7 | 12 227 05 | 1 | Cap–Drive End |
| †8 | 12 755 53 | 1 | Kit–Drive |
| * | 52 357 01 | 1 | Lubricant–Starter |

| Ref. No. | Part No. | Qty. | Description |
|---|---|---|---|
| | | | |

† Included in a service kit or in an assembly
* Not illustrated

3317–773

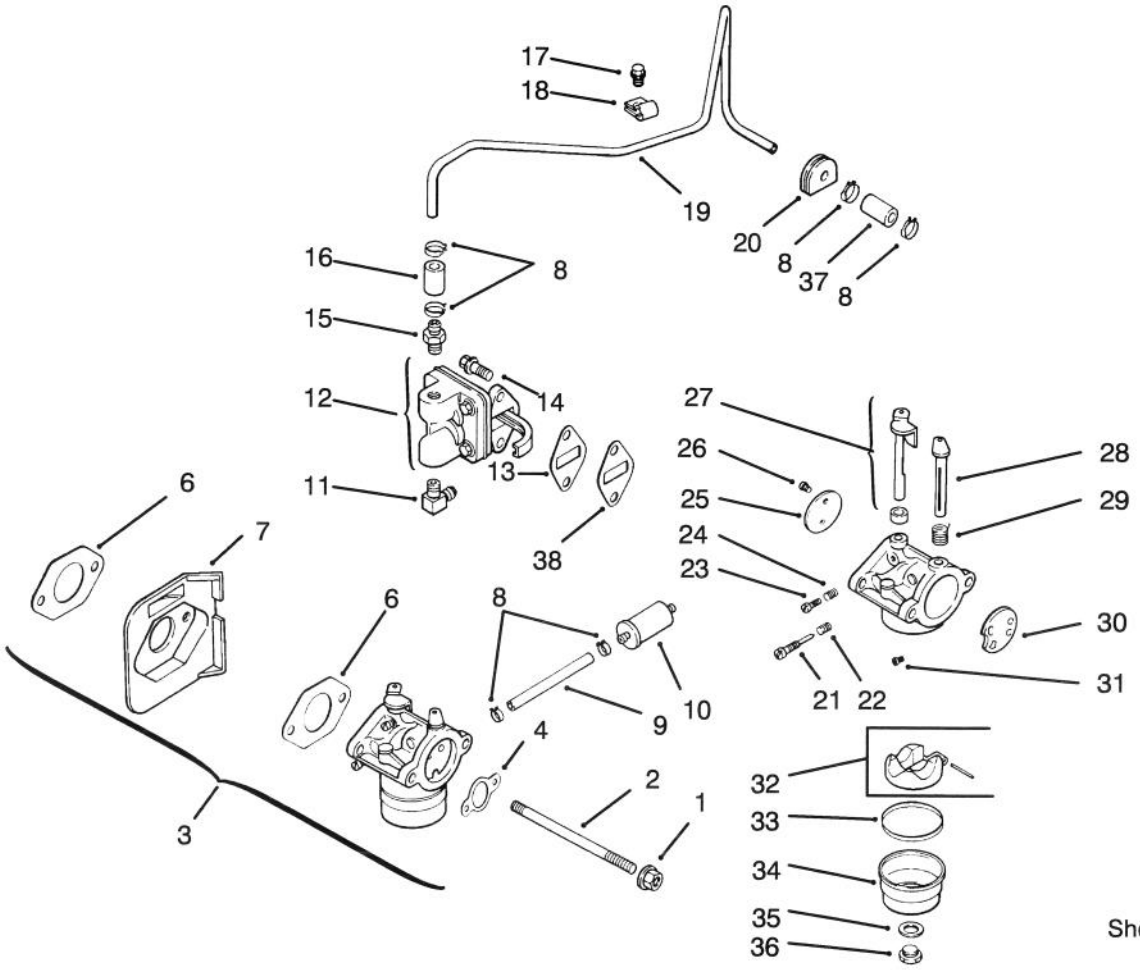


Sheet No.: 108
C–

# Fuel System

| Ref. No. | Part No. | Qty. | Description |
|---|---|---|---|
| 1 | Sm–0641060 | 2 | Nut M6x1.0 |
| 2 | M–0629122 | 2 | Stud M6x1.0x110 |
| 3 | | 1 | Kit–Carburator W/Gasket Incl 4–6 |
| †4 | 12 041 02 | 1 | Gasket–Air Cleaner |
| †5 | 12 053 57 | 1 | Carurator ASM Incl 21–36 |
| †6 | 12 041 01 | 2 | Gasket–Carburetor |
| 7 | 12 265 04 | 1 | Deflector–Heat |
| 8 | X–426–9 | 1 | Clamp–Hose |
| 9 | 12 353 10 | 1 | Line–Fuel |
| 10 | 25 050 02 | 1 | Filter–Fuel |
| 11 | 25 155 02 | 1 | Connector–90 DEG |
| 12 | 12 559 01 | 1 | Kit–Pump Incl 13–14 |
| †13 | 25 041 09 | 1 | Gasket–Fuel Pump |
| †14 | M–0645020 | 2 | Screw–HH M6x1.0x20 |
| 15 | X–380–1 | 1 | Connector–Straight |
| 16 | 12 353 01 | 1 | Line–Fuel 1.25 Inch |
| 17 | Sm–0545010 | 1 | Screw M5x0.8x10 |
| 18 | 12 154 01 | 1 | Clamp–Fuel Line |
| 19 | 12 123 19 | 1 | Line–Fuel |
| 20 | 12 313 01 | 1 | Grommet |
| †21 | 12 368 05 | 1 | Needle–Idle Fuel Adjust |
| †22 | 12 089 09 | 1 | Spring–Idle Fuel |

| Ref. No. | Part No. | Qty. | Description |
|---|---|---|---|
| †23 | 12 086 04 | 1 | Screw–Idle Speed Adjust |
| †24 | 12 089 09 | 1 | Spring–Idle Fuel |
| †25 | 12 146 03 | 1 | Plate–Throttle |
| †26 | 25 086 27 | 1 | Screw–Throttle Plate |
| †27 | 12 144 09 | 1 | Shaft–W/Lever & Seal |
| †28 | 12 144 08 | 1 | Shaft–Choke |
| †29 | 12 089 10 | 1 | Spring–Choke Return |
| †30 | 12 146 02 | 1 | Plate–Choke |
| †31 | 12 337 03 | 1 | Jet–Main |
| †32 | 12 757 02 | 1 | Kit–Float |
| †33 | 12 041 05 | 1 | Gasket–Bowl |
| †34 | 12 104 01 | 1 | Bowl–Fuel |
| †35 | 12 041 06 | 1 | Gasket–Bowl Screw |
| †36 | 12 086 05 | 1 | Screw–Fuel Bowl |
| 37 | 25 353 02 | 1 | Line–Fuel 3" |
| 38 | 12 112 05 | 1 | Spacer–Fuel Pump |
| * | 12 041 01 | 1 | Gasket–Carburetor |
| * | 12 757 01 | 1 | Kit–Carburetor Repair |

† Included in a service kit or in an assembly
* Not illustrated

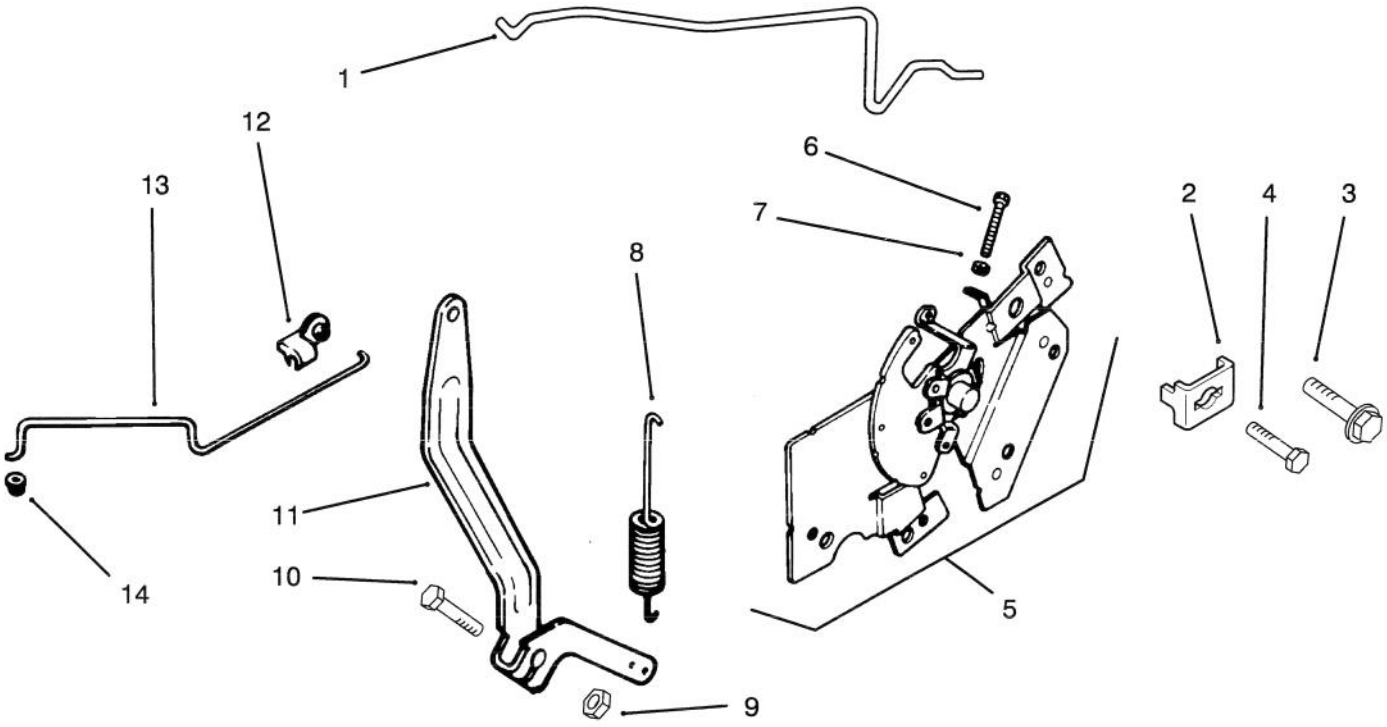


Sheet No.: 109
C–1956

# Engine Controls

| Ref. No. | Part No. | Qty. | Description |
|---|---|---|---|
| 1 | 12 079 07 | 1 | Linkage–Choke |
| 2 | 12 237 01 | 2 | Clamp–Cable |
| 3 | M–0645016 | 2 | Screw–HH M6x1.0x16 |
| 4 | M–0545016 | 2 | Screw M5x0.8x16 |
| 5 | 12 536 02 | 1 | Control–ASM Incl 6–7 |
| †6 | M–0401030 | 1 | Screw–HHF M4x0.7x28 |
| †7 | M–0446030 | 1 | Nut–Hex M4x0.7 |
| 8 | 52 089 07 | 1 | Spring–Governor |
| 9 | M–0641060 | 1 | Nut M6x1.0 |
| 10 | Sm–0642025 | 1 | Screw M6x1.0x25 |
| 11 | 12 090 05 | 1 | Lever–Governor |
| 12 | 25 158 11 | 1 | Bushing–Linkage |
| 13 | 12 079 01 | 1 | Linkage–Throttle |
| 14 | 25 158 08 | 1 | Bushing–Linkage |

| Ref. No. | Part No. | Qty. | Description |
|---|---|---|---|

† Included in a service kit or in an assembly

3317–773

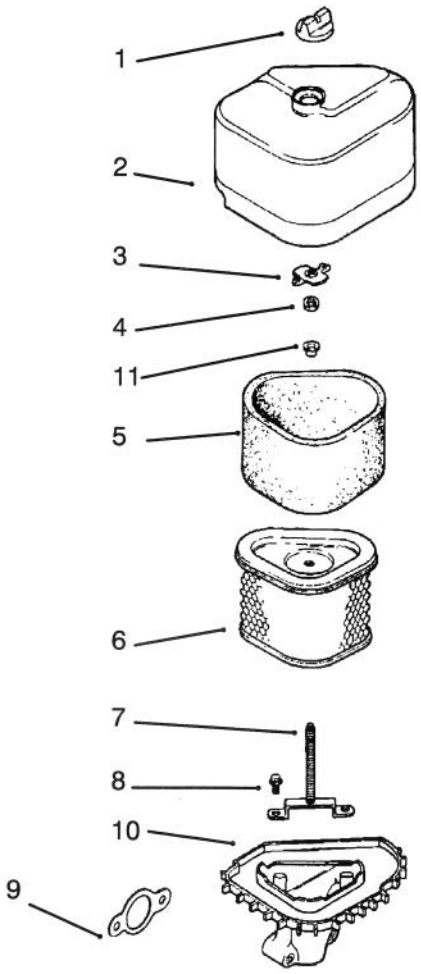


Sheet No.: 110
C–

# Air Intake / Filtration

| Ref. No. | Part No. | Qty. | Description |
|---|---|---|---|
| 1 | 12 341 02 | 1 | Knob–Air Cleaner Cover |
| 2 | 12 096 24 | 1 | Cover–Air Cleaner |
| 3 | 12 100 01 | 1 | Nut–Wing |
| 4 | X–25–63 | 1 | Washer–Flat |
| 5 | 12 083 05 | 1 | Element–Air Cleaner Incl 11 |
| 6 | 12 083 08 | 1 | Precleaner–Element |
| 7 | 12 072 05 | 1 | Stud–Mounting Plate |
| 8 | 12 086 01 | 1 | Screw–Mounting Plate |
| 9 | 12 041 02 | 1 | Gasket–Air Cleaner |
| 10 | 12 094 05 | 1 | Base–Air Cleaner Incl 7 |
| 11 | 12 313 04 | 1 | Grommet |
| * | 12 113 04 | 1 | Decal–Air Cleaner |
| * | 12 743 04 | 1 | Kit–Air Cleaner Incl 1–11 |

| Ref. No. | Part No. | Qty. | Description |
|---|---|---|---|

* Not illustrated

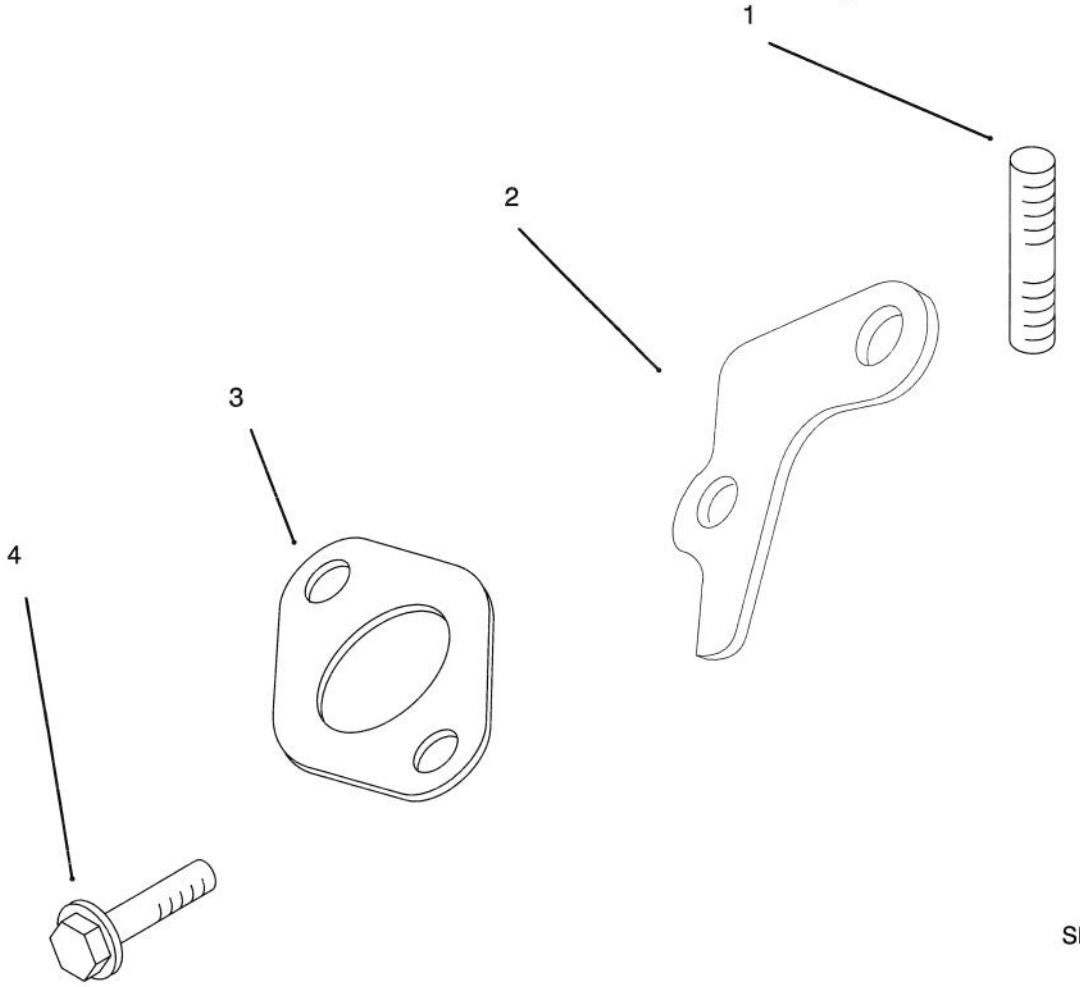


Sheet No.: 111
C–

# Exhaust

| Ref. No. | Part No. | Qty. | Description |
|---|---|---|---|
| 1 | M–0829033 | 2 | Stud M8x1.25x20 |
| 2 | 12 455 06 | 1 | Strap–Lifting |
| 3 | 12 041 03 | 1 | Gasket–Exhaust Manifold |
| 4 | M–0645025 | 1 | Screw–Valve Cover |

| Ref. No. | Part No. | Qty. | Description |
|---|---|---|---|

3317–773

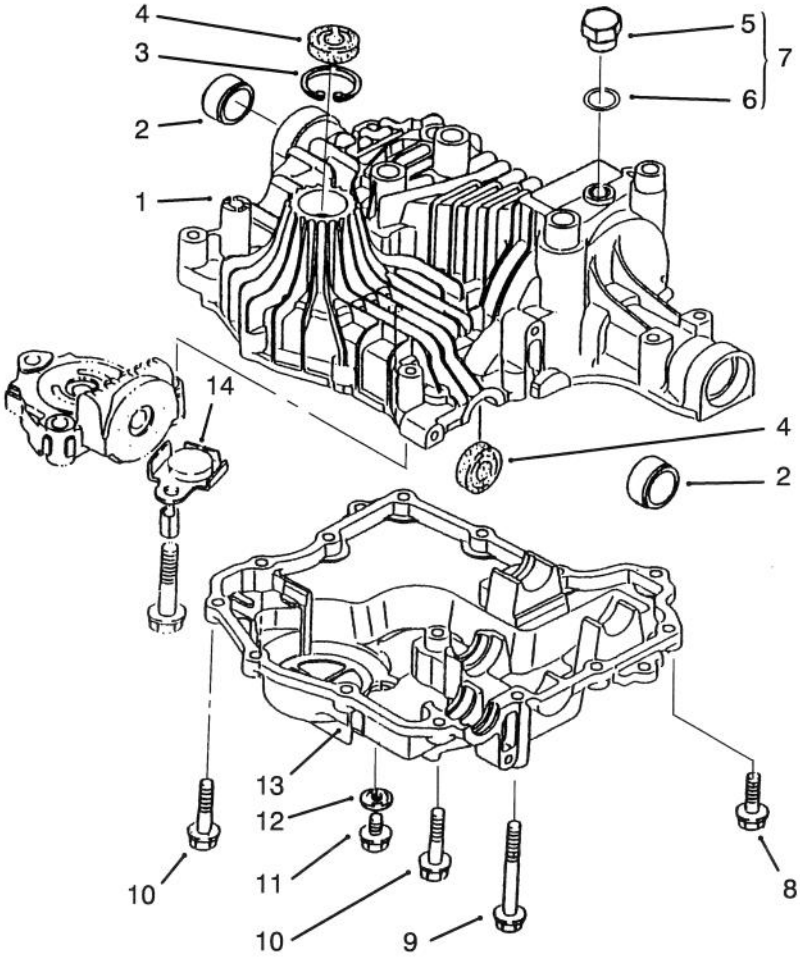


Sheet No.: 401

c–1860

# Transaxle Case

| Ref. No. | Part No. | Qty. | Description |
|---|---|---|---|
| 1 | 94–4206 | 1 | Upper Case ASM Incl 2–6 |
| †2 | | 2 | Bushing |
| †3 | 93–0360 | 1 | Ring |
| †4 | 93–0361 | 2 | Seal |
| †5 | | 1 | Plug |
| †6 | | 1 | Packing |
| 7 | 93–0356 | 1 | Plug/Packing Incl 5–6 |
| 8 | 93–0363 | 11 | Screw–TAP |
| 9 | 93–0354 | 1 | Bolt |
| 10 | 93–0364 | 2 | Screw–TAP |
| 11 | 93–0362 | 1 | Bolt |
| 13 | 94–4207 | 1 | Case–Lower |
| 14 | 93–0355 | 1 | Magnet |

| Ref. No. | Part No. | Qty. | Description |
|---|---|---|---|
| | | | |

† Included in a service kit or in an assembly

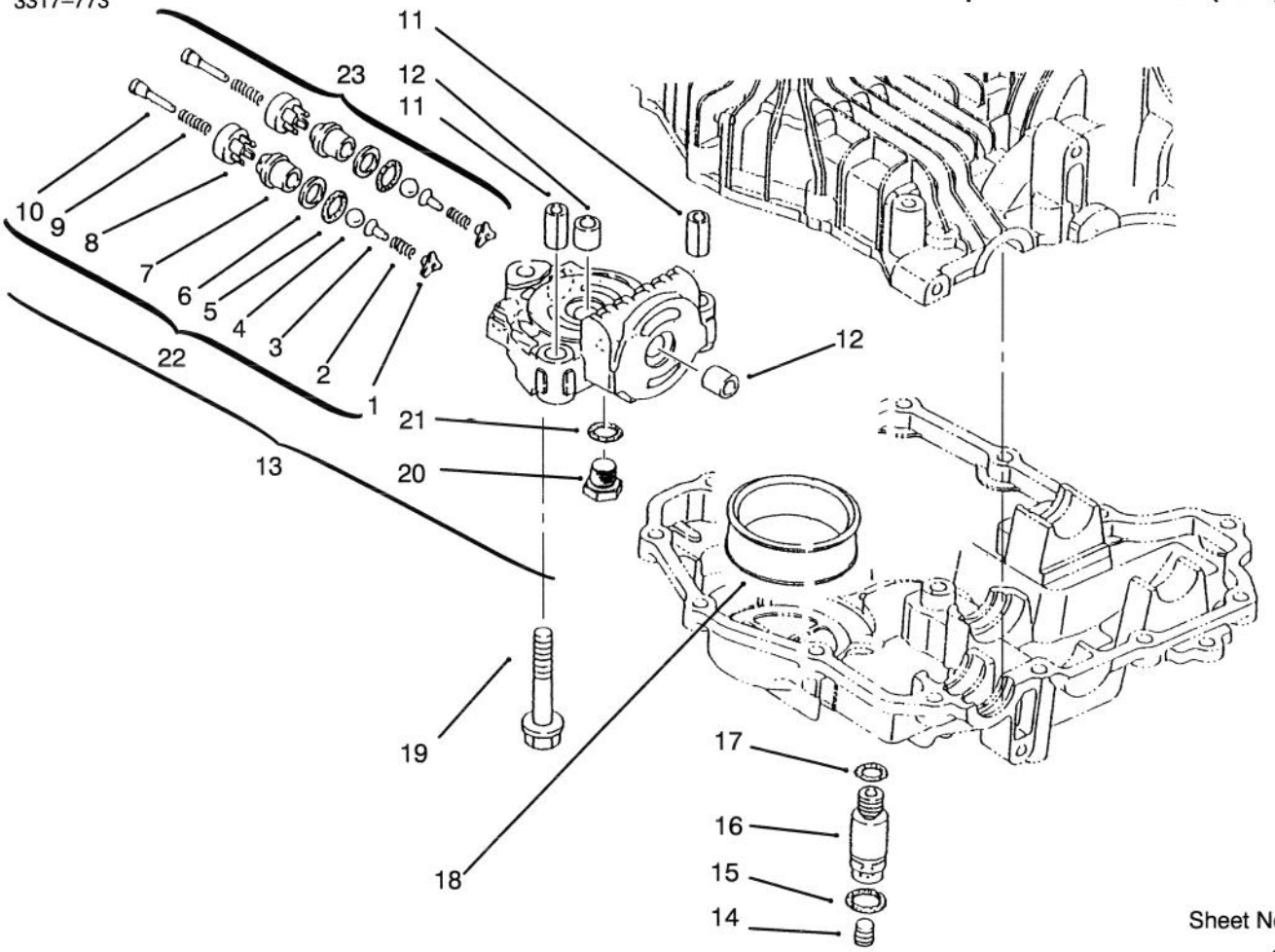


Sheet No.: 402

c–1877

# Center Case

| Ref. No. | Part No. | Qty. | Description |
|---|---|---|---|
| †1 | 93–0461 | 2 | Holder–Bypass |
| †2 | | 2 | Spring |
| †3 | | 2 | Holder–Ball |
| †4 | | 1 | Ball |
| †5 | 93–0465 | 2 | Packing |
| †6 | 93–0466 | 2 | Ring–Back Up |
| †7 | | 1 | Sleeve A1 |
| †8 | | 2 | Valve B |
| †9 | | 2 | Spring |
| †10 | | 2 | Pin–Push |
| †11 | 93–0471 | 2 | Pin–Knock |
| †12 | 93–0472 | 2 | Bushing |
| 13 | 93–0484 | 1 | Case Incl 11–12 & 20–23 |
| 14 | 93–0474 | 1 | Plug |
| 15 | 93–0475 | 1 | Packing |
| 16 | 93–0476 | 1 | Connector |
| 17 | 93–0481 | 1 | Packing |
| 18 | 93–0478 | 1 | Filter |
| 19 | 93–0479 | 3 | Bolt |
| 20 | 93–0480 | 1 | Plug |
| 21 | 93–0481 | 1 | Packing |
| 22 | 93–0482 | 1 | Valve ASM A1 Incl 1–10 |
| 23 | 93–0483 | 1 | Valve ASM A2 |

| Ref. No. | Part No. | Qty. | Description |
|---|---|---|---|
| | | | |

† Included in a service kit or in an assembly

3317–773

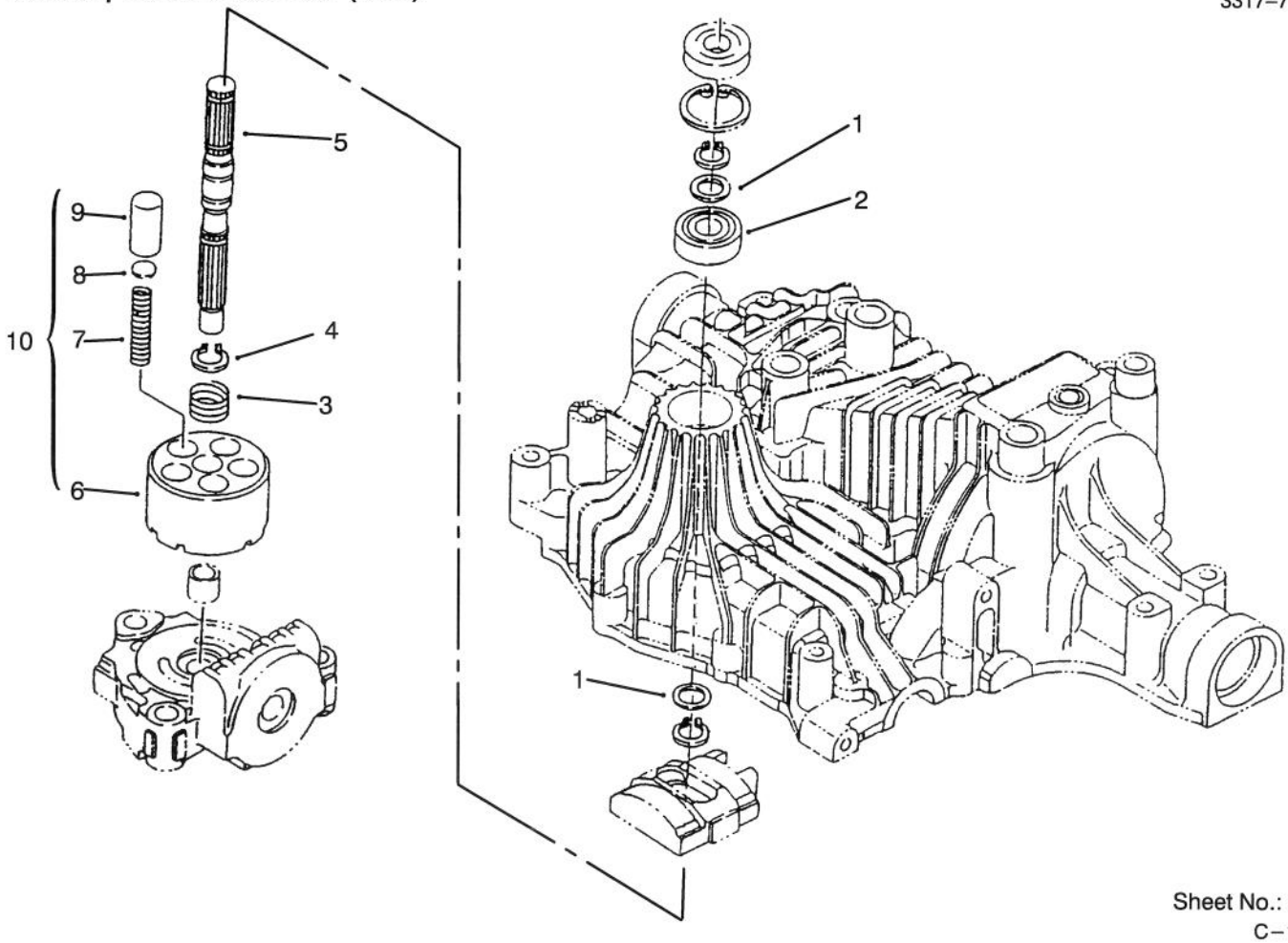


Sheet No.: 403
C–1861

# Pump Shaft

| Ref. No. | Part No. | Qty. | Description |
|---|---|---|---|
| 1 | 93–0371 | 2 | Washer |
| 2 | 93–0374 | 1 | Bearing–Ball |
| 3 | 93–0370 | 1 | Spring |
| 4 | 93–0373 | 3 | Ring–Snap |
| 5 | 93–0372 | 1 | Shaft–Pump |
| †6 | | 1 | Block–Cylinder |
| †7 | | 5 | Spring |
| †8 | | 5 | Washer |
| †9 | | 5 | Piston |
| 10 | 93–0365 | 1 | Cylinder ASM Incl 6–9 |

| Ref. No. | Part No. | Qty. | Description |
|---|---|---|---|
| | | | |

† Included in a service kit or in an assembly

3317–773

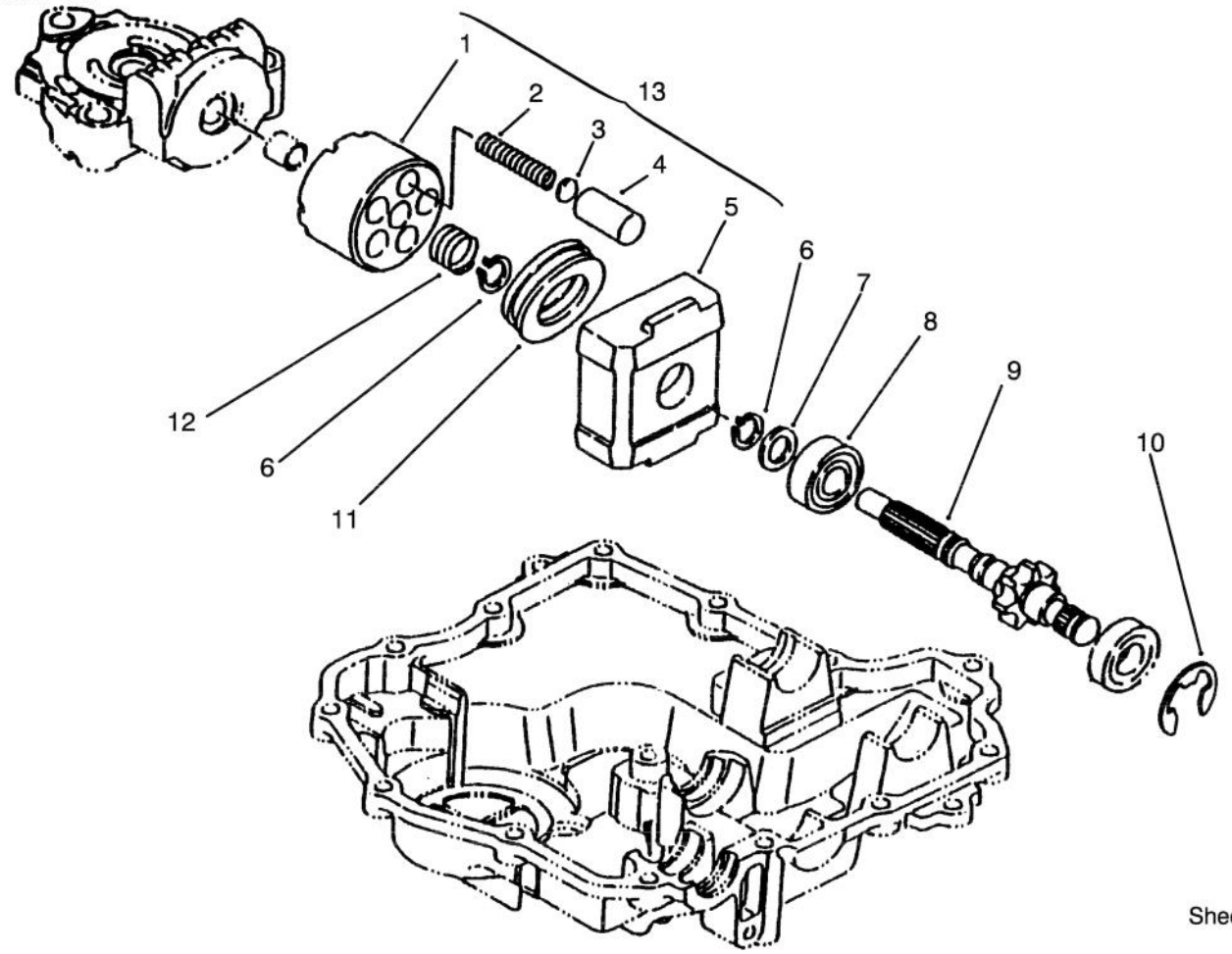


Sheet No.: 404
c–1862

# Motor Shaft

| Ref. No. | Part No. | Qty. | Description |
|---|---|---|---|
| 1 | | 1 | Block–Cylinder |
| 2 | | 1 | Spring |
| 3 | | 5 | Washer |
| 4 | | 5 | Piston |
| 5 | 93–0375 | 1 | Housing |
| 6 | 93–0373 | 2 | Ring–Snap |
| 7 | 93–0371 | 1 | Washer |
| 8 | 93–0374 | 1 | Bearing–Ball |
| 9 | 93–0386 | 1 | Shaft–Motor |
| 10 | 93–0387 | 1 | E Ring |
| 11 | 93–0376 | 1 | Bearing–Thrust |
| 12 | | 1 | Spring |
| 13 | 93–0365 | 1 | Cylinder ASM Incl 1–5 |

| Ref. No. | Part No. | Qty. | Description |
|---|---|---|---|
| | | | |

3317–773

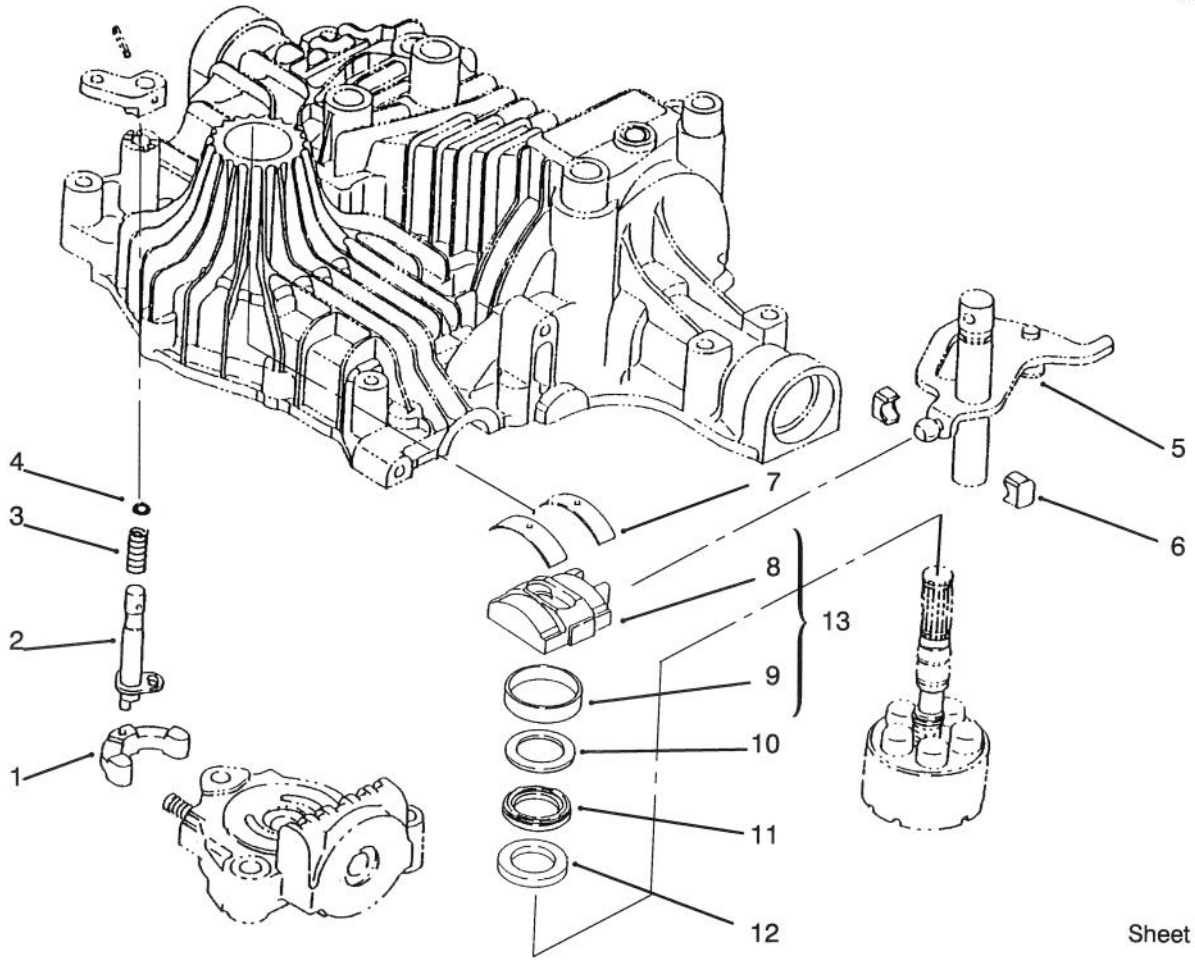


Sheet No.: 405

c–1863

# Range Shift

| Ref. No. | Part No. | Qty. | Description |
|---|---|---|---|
| 1 | 93–0395 | 1 | Arm |
| 2 | 93–0397 | 1 | Shaft–Bypass |
| 3 | 93–0396 | 1 | Spring |
| 4 | 93–0400 | 1 | Packing |
| 5 | 93–0398 | 1 | Block Set Incl 6 |
| †6 | | 1 | Block–Shift |
| 7 | 93–0388 | 2 | Thrust Metal |
| †8 | | 1 | Plate–Swash |
| †9 | | 1 | Bushing–Swashplate |
| 10 | 93–0394 | 1 | Plate–Thrust |
| 11 | 93–0392 | 1 | Bearing |
| 12 | 93–0393 | 1 | Plate–Thrust |
| 13 | 93–0389 | 1 | Swash Plate Incl 8–9 |

| Ref. No. | Part No. | Qty. | Description |
|---|---|---|---|
| | | | |

† Included in a service kit or in an assembly

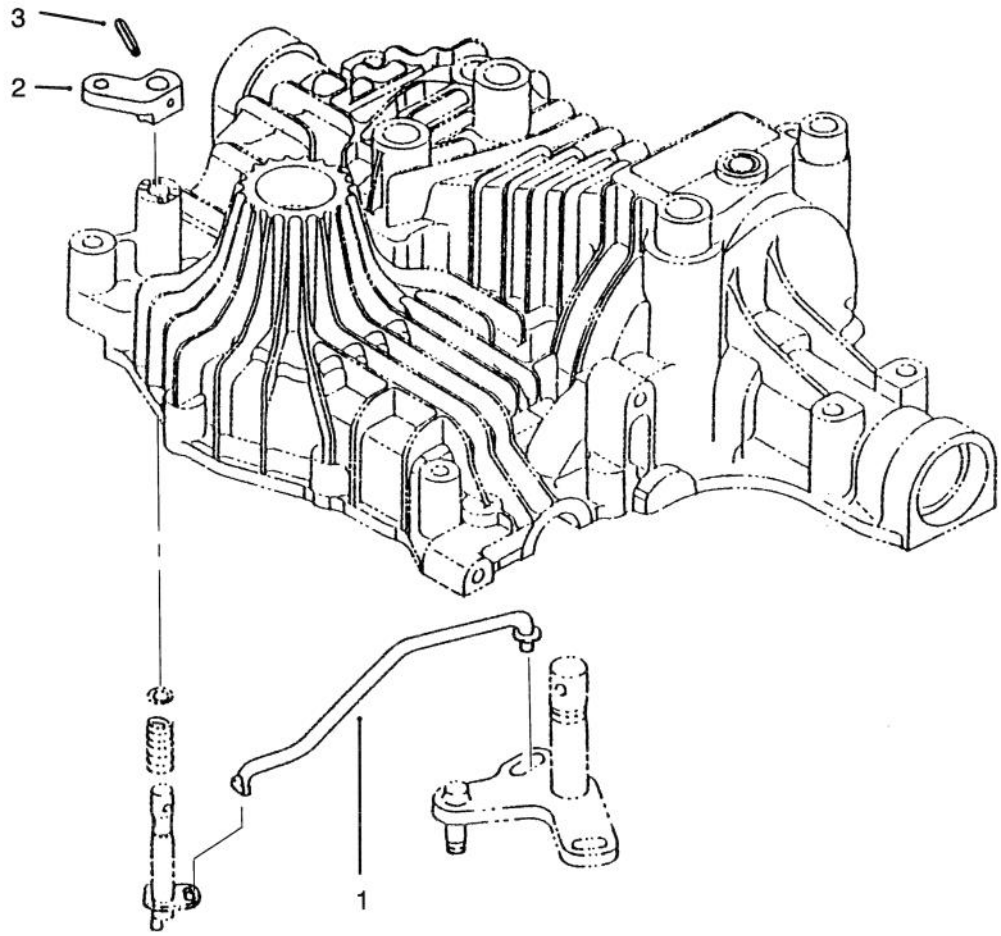


Sheet No.: 406

c–1864

# Bypass Return

| Ref. No. | Part No. | Qty. | Description |
|---|---|---|---|
| 1 | 93–0401 | 1 | Rod–Bypass |
| 2 | 93–0402 | 1 | Arm–Valve Release |
| 3 | 93–0403 | 1 | Pin–Roll |

| Ref. No. | Part No. | Qty. | Description |
|---|---|---|---|

3317–773

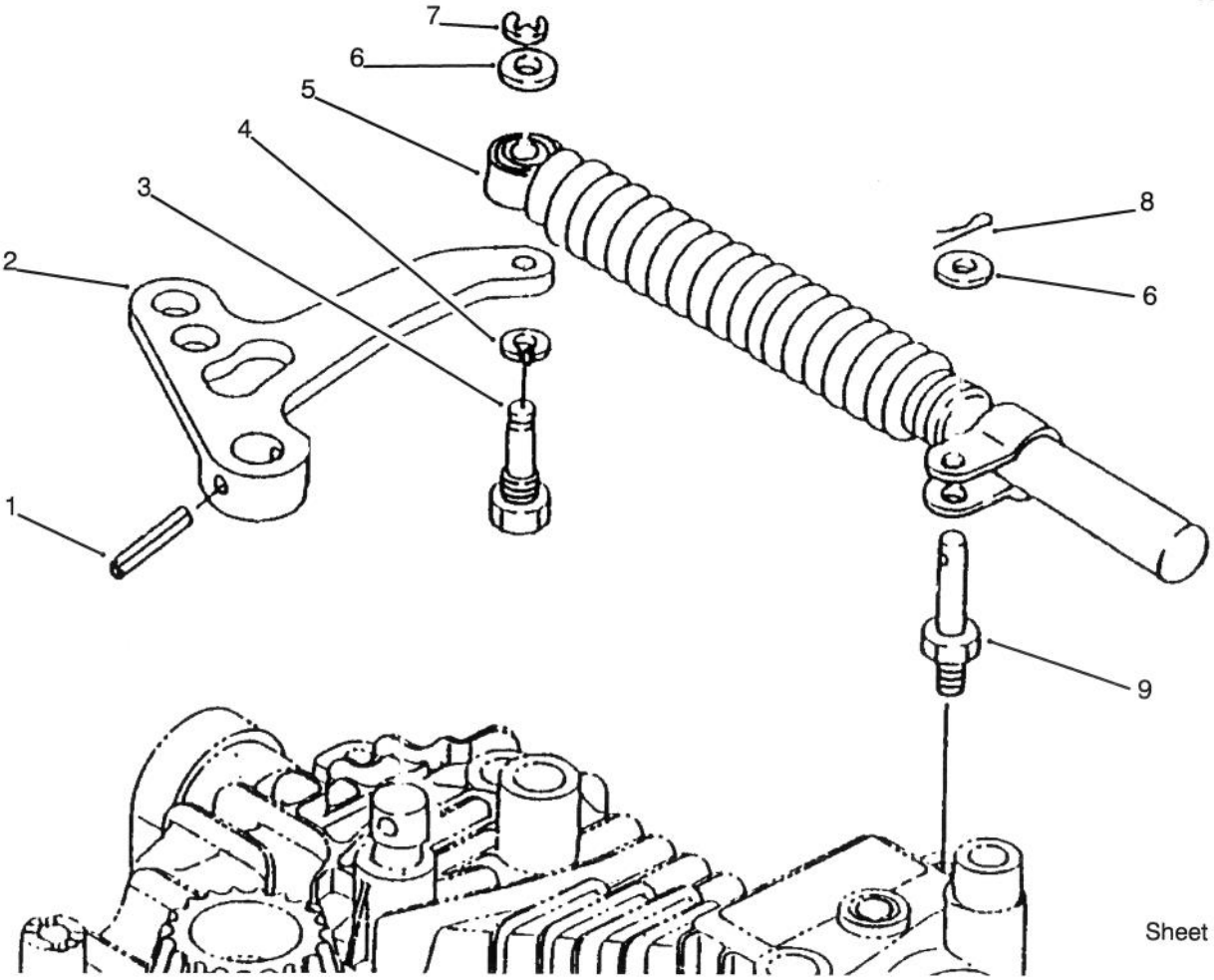


Sheet No.: 407
C–1865

# Lever Damper

| Ref. No. | Part No. | Qty. | Description |
|---|---|---|---|
| 1 | 93–0411 | 1 | Pin–Roll |
| 2 | 93–0404 | 1 | Arm |
| 3 | 93–0407 | 1 | Bolt |
| 4 | 93–0409 | 1 | Washer |
| 5 | 93–0405 | 1 | Shock Absorber |
| 6 | 93–0408 | 2 | Washer |
| 7 | 93–0410 | 1 | Ring |
| 8 | 93–0412 | 1 | Pin–Cotter |
| 9 | 93–0406 | 1 | Stud |

| Ref. No. | Part No. | Qty. | Description |
|---|---|---|---|

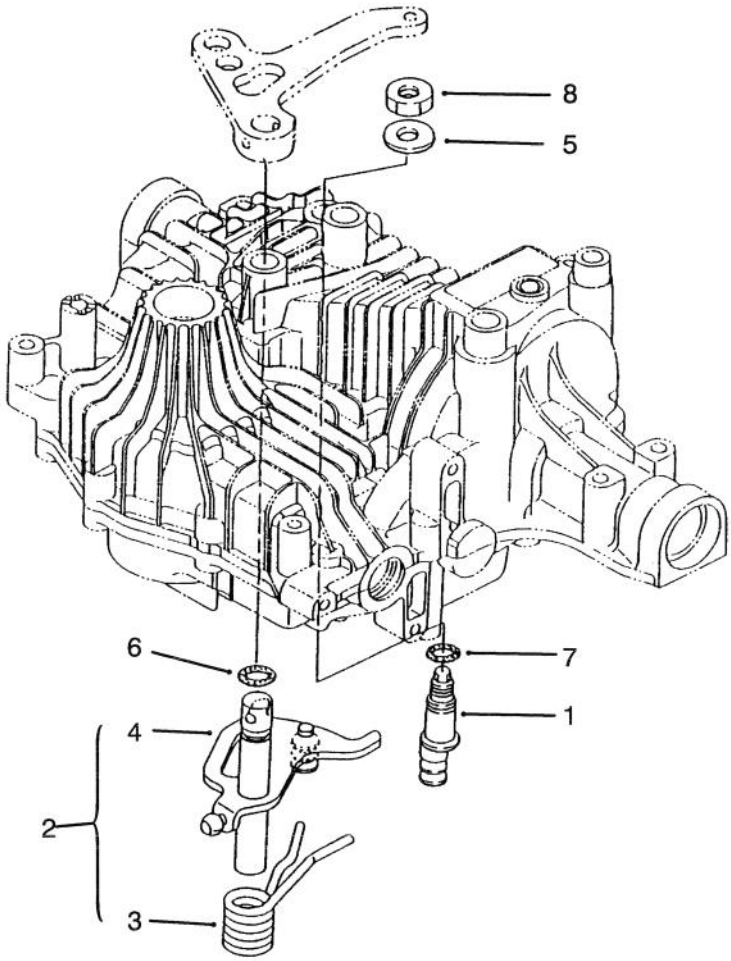


Sheet No.: 408

C–1866

# N-Centering

| Ref. No. | Part No. | Qty. | Description |
|---|---|---|---|
| 1 | 93–0413 | 1 | Fulcrum |
| 2 | 93–0414 | 1 | Shaft ASM Incl 3–4 |
| †3 | | 1 | Spring |
| †4 | | 1 | Shaft–Control |
| 5 | 93–0417 | 1 | Washer |
| 6 | 93–0418 | 1 | Packing |
| 7 | 93–0419 | 1 | Packing |
| 8 | 93–0420 | 1 | Nut |

| Ref. No. | Part No. | Qty. | Description |
|---|---|---|---|

† Included in a service kit or in an assembly

3317–773

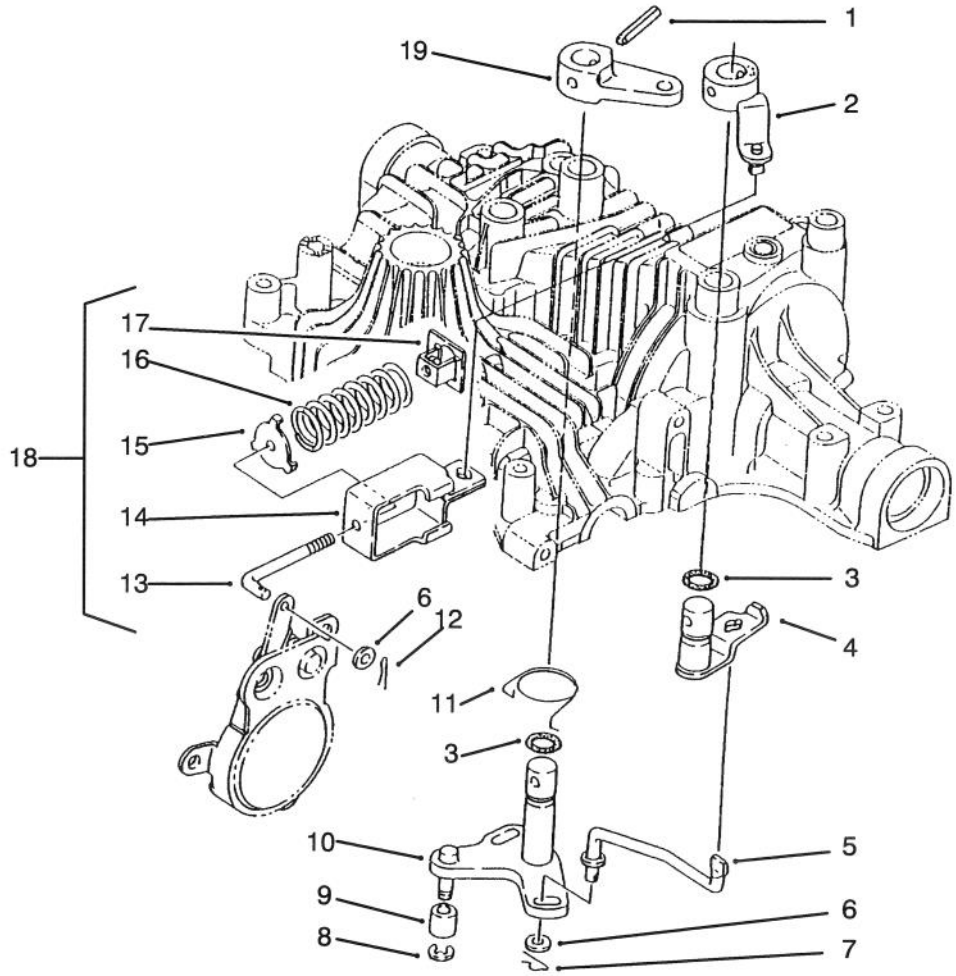


Sheet No.: 409

C–1867

# Brake Interlock

| Ref. No. | Part No. | Qty. | Description |
|---|---|---|---|
| 1 | 93–0411 | 2 | Pin–Roll |
| 2 | 93–0433 | 1 | Arm–Brake B |
| 3 | 93–0418 | 2 | Packing |
| 4 | 93–0432 | 1 | Arm–Brake A |
| 5 | 93–0431 | 1 | Rod–Brake |
| 6 | 93–0435 | 2 | Washer |
| 7 | 93–0434 | 1 | Pin–Snap |
| 8 | 93–0410 | 1 | Ring |
| 9 | 93–0421 | 1 | Bushing |
| 10 | 93–0430 | 1 | Shaft–Brake |
| 11 | 93–0422 | 1 | Return–Brake |
| 12 | 93–0412 | 1 | Pin–Cotter |
| †13 | 93–0428 | 1 | Rod–Adjuster |
| †14 | 93–0426 | 1 | Holder–Spring |
| †15 | 93–0425 | 1 | Guide–Spring |
| †16 | 93–0427 | 1 | Spring |
| †17 | 93–0424 | 1 | Adjuster |
| 18 | 93–0423 | 1 | Rod ASM Incl 13–17 |
| 19 | 93–0429 | 1 | Arm–Brake |

| Ref. No. | Part No. | Qty. | Description |
|---|---|---|---|
| | | | |

† Included in a service kit or in an assembly

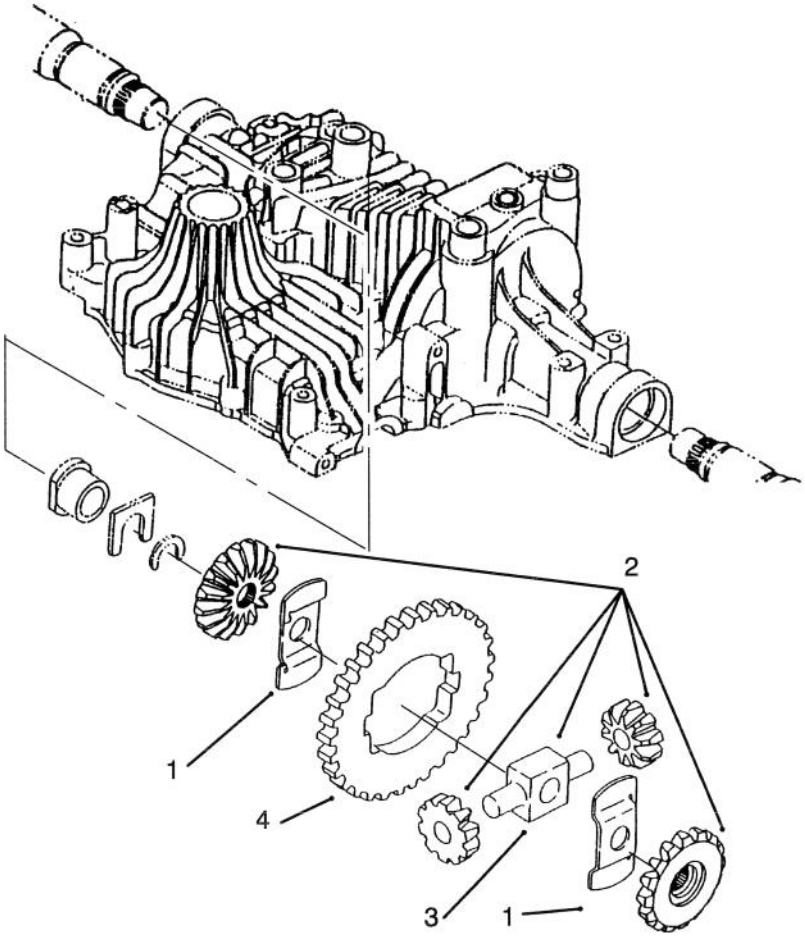


Sheet No.: 410

c–1868

# Differential Gear

| Ref. No. | Part No. | Qty. | Description |
|---|---|---|---|
| 1 | 93–0444 | 2 | Washer–Thrust |
| 2 | 93–0440 | 1 | Differential Gear ASM |
| 3 | 93–0443 | 1 | Shaft–Pinion |
| 4 | 93–0445 | 1 | Gear–Final |

| Ref. No. | Part No. | Qty. | Description |
|---|---|---|---|

3317–773

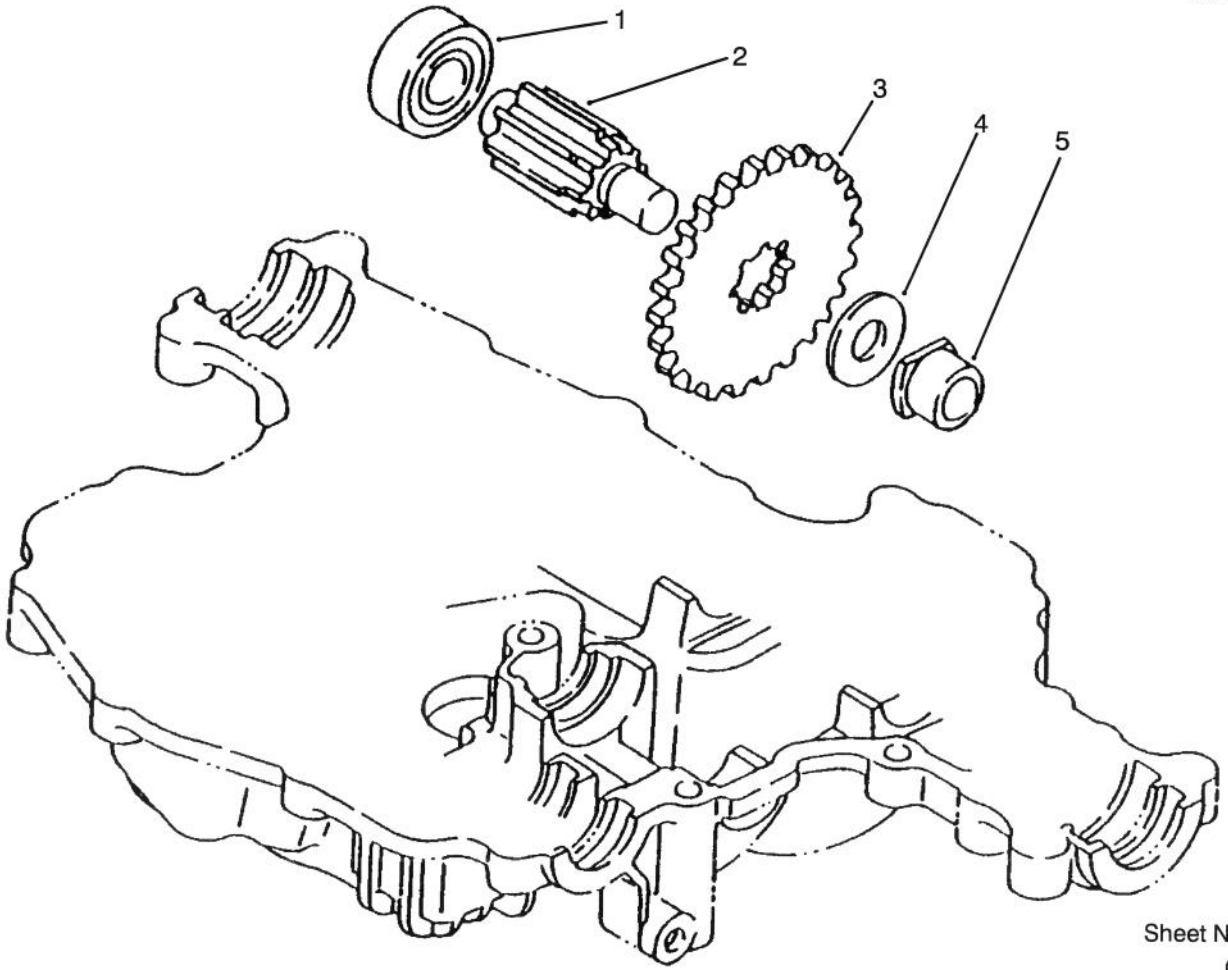


Sheet No.: 411
C–1869

# Final Pinion

| Ref. No. | Part No. | Qty. | Description |
|---|---|---|---|
| 1 | 93–0446 | 1 | Bearing |
| 2 | 93–0447 | 1 | Shaft–Final Pinion |
| 3 | 93–0448 | 1 | Gear–Final Shaft |
| 4 | 93–0449 | 1 | Washer |
| 5 | 93–0450 | 1 | Bushing |

| Ref. No. | Part No. | Qty. | Description |
|---|---|---|---|

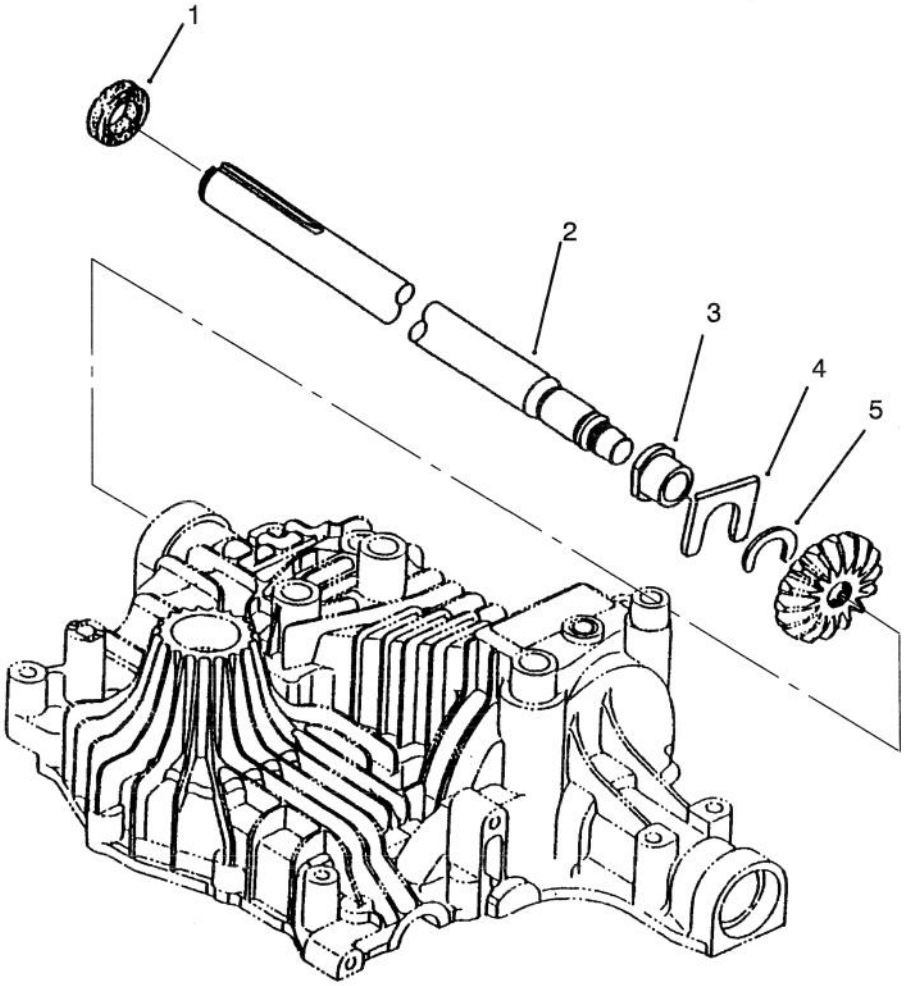


Sheet No.: 412

C–1870

# Axle Shaft

| Ref. No. | Part No. | Qty. | Description |
|---|---|---|---|
| 1 | 93–0451 | 2 | Seal |
| 2 | 93–0452 | 1 | Shaft–Axle Right |
| 3 | 93–0454 | 2 | Bushing |
| 4 | 93–0455 | 2 | Washer–Thrust |
| 5 | 93–0456 | 2 | Ring |
| * | 93–0453 | 1 | Shaft–Axle Left |

| Ref. No. | Part No. | Qty. | Description |
|---|---|---|---|

* Not illustrated

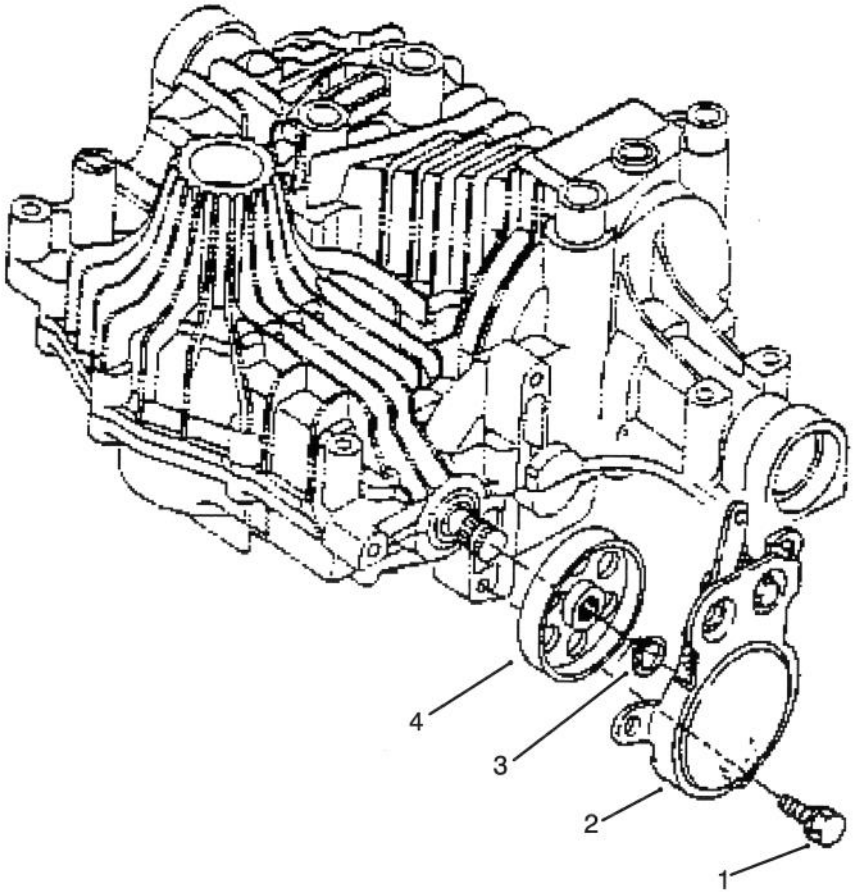


Sheet No.: 413
C–1871

# Brake

| Ref. No. | Part No. | Qty. | Description |
|---|---|---|---|
| 1 | 93–0457 | 3 | Bolt W/Washer |
| 2 | 93–0458 | 1 | Band–Brake Interlock |
| 3 | 93–0373 | 1 | Ring–Snap |
| 4 | 93–0460 | 1 | Drum–Brake |

| Ref. No. | Part No. | Qty. | Description |
|---|---|---|---|

# Electric Schematic Single Cylinder Hydro Drive

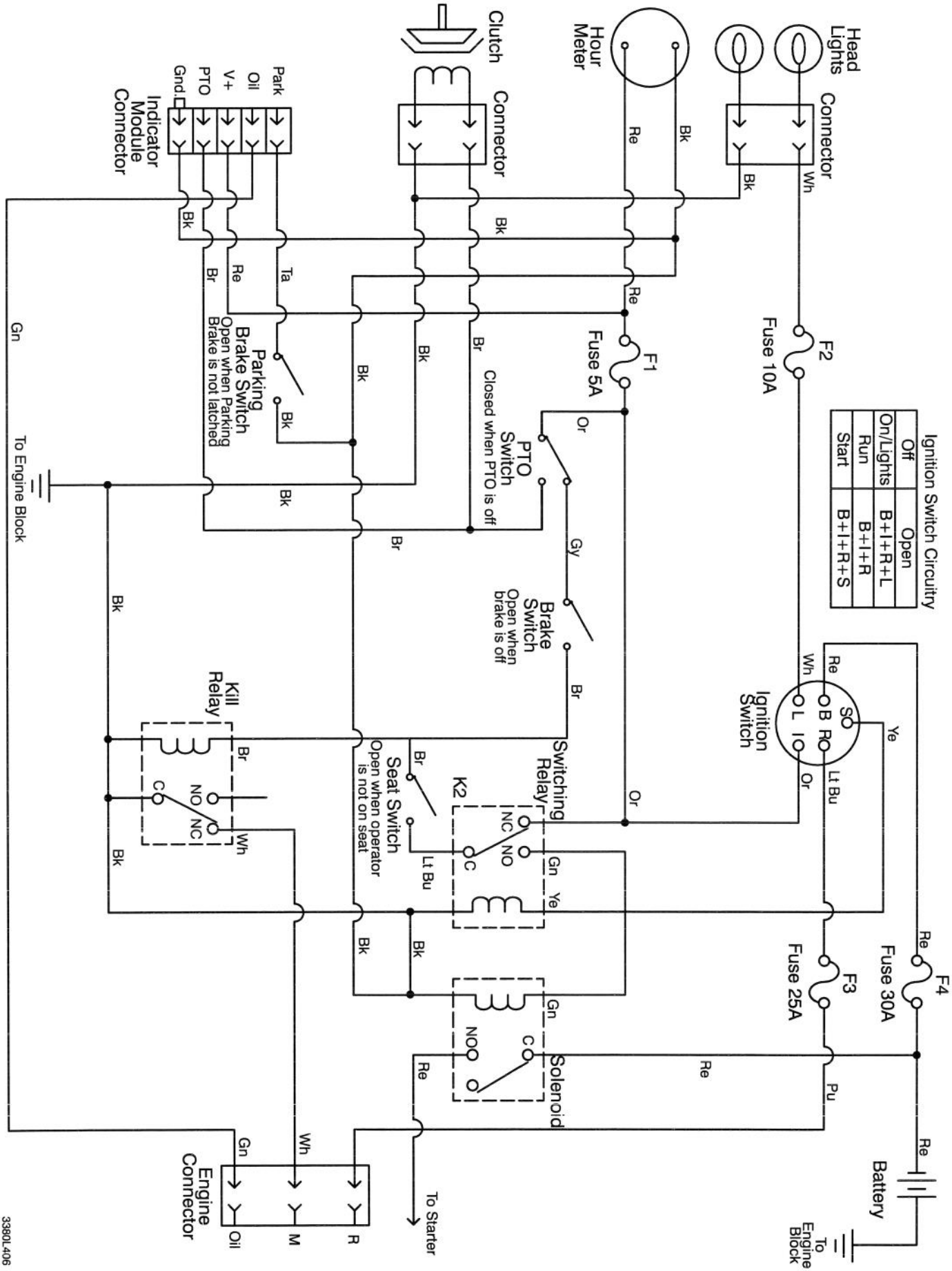


C–1944

# Wire Harness Routing — Single Cylinder Engine

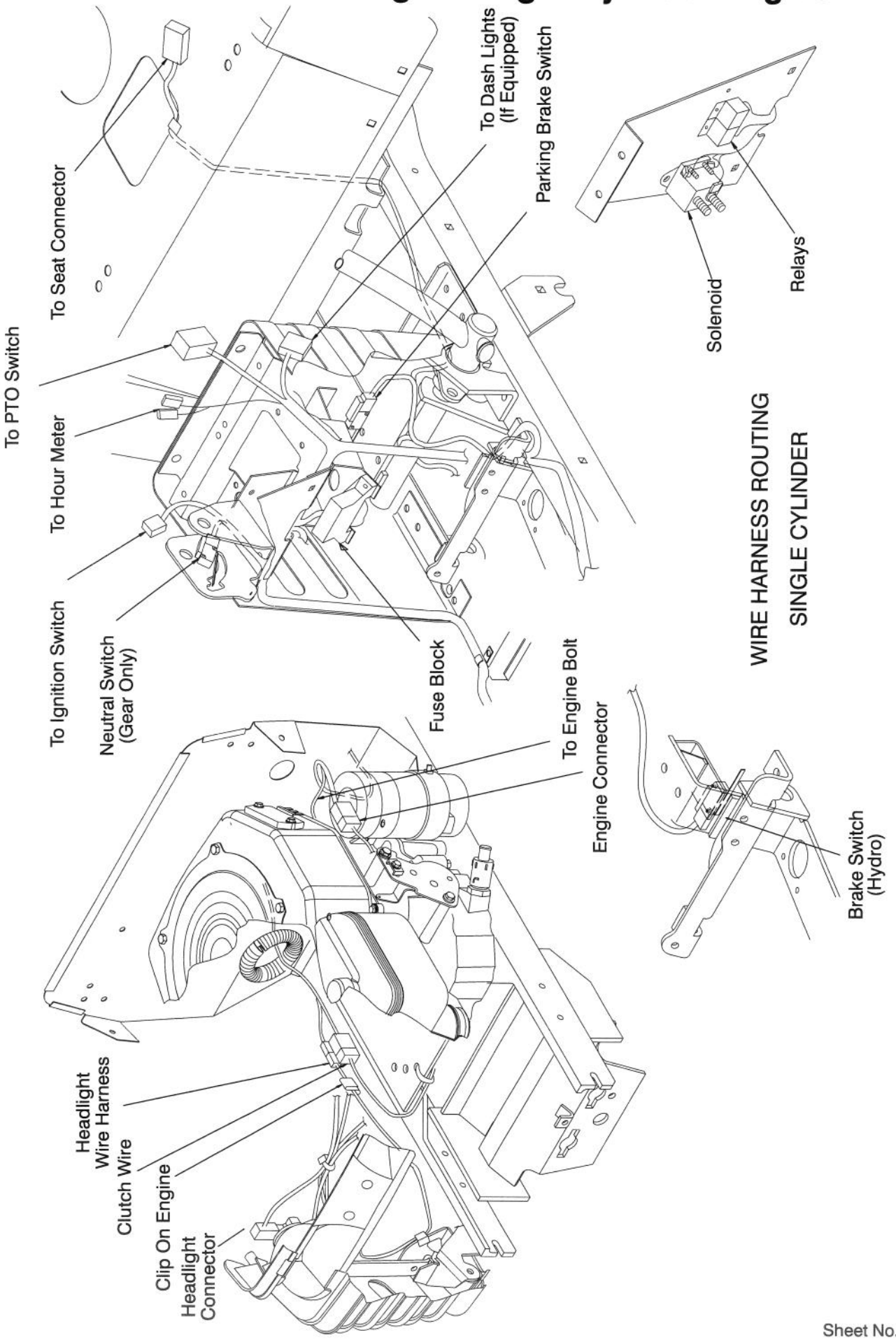

# Toro Part Number Index

| Part No. | Page No. | Ref. No. | Qty. | Description |
|---|---|---|---|---|
| 1278 | 4 | 11 | 2 | Washer–Shim |
| 1278 | 5 | 17 | 4 | Washer–Shim |
| 2534 | 15 | 1 | 2 | Clip–Spring |
| 3624 | 13 | 13 | 1 | Spring–Compression |
| 5108 | 5 | 3:3 | 2 | Valve–Tire Tubeless |
| 5108 | 19 | 1:2 | 2 | Valve–Tire Tubeless |
| 5210 | 5 | 18 | 4 | Washer–Shim |
| 5618 | 5 | 19 | 1 | Ring–Retaining |
| 7896 | 3 | 4 | 1 | Washer–Bowed |
| 8130 | 13 | 14 | 1 | Retainer–Spring |
| 8830 | 14 | 16 | 1 | Retainer–"j" |
| 8870 | 13 | 25 | 1 | Trunnion |
| 104047 | 8 | 3:2 | 1 | Bushing |
| 104048 | 8 | 3:1 | 1 | Fuel Valve |
| 105503 | 1 | 16 | 2 | Bushing |
| 105503 | 6 | 14 | 2 | Bushing |
| 105842 | 11 | 12 | 1 | Battery |
| 106269 | 13 | 43 | 1 | Bearing–Flange |
| 106288 | 7 | 16 | 2 | Clamp |
| 106557 | 6 | 12 | 2 | Reflector |
| 106948 | 11 | 6 | 1 | Tray–Battery |
| 107069 | 7 | 20 | 4 | Nut–Speed |
| 108881 | 4 | 5 | 1 | Nut–Hex |
| 109189 | 4 | 7 | 1 | Bearing–Flange |
| 109547 | 11 | 8 | 2 | Hook–Battery |
| 109553 | 11 | 15 | 1 | Boot–Battery Cable |
| 109989 | 6 | 21 | 2 | Spacer |
| 110391 | 4 | 6 | 1 | Bearing–Wheel |
| 110513 | 5 | 3:2 | 4 | Bearing–Wheel |
| 111078 | 11 | 5 | 1 | Cable–Battery Black |
| 111383 | 4 | 8 | 1 | Collar W/Set Screw |
| 111418 | 4 | 3 | 1 | Bushing |
| 111418 | 15 | 11 | 1 | Bushing |
| 111419 | 4 | 1 | 1 | Washer–Bearing |
| 111419 | 15 | 5 | 1 | Washer–Bearing |
| 111646 | 4 | 9 | 1 | Grip Ring |
| 112168 | 13 | 16 | 1 | Decal–Lift (Only On: 72046) |
| 112843 | 9 | 8 | 1 | Washer–PTO |
| 114064 | 10 | 4 | 2 | Bearing–Elec Clutch (Only On: 72064) |
| 114621 | 6 | 6 | 1 | Decal–Noise (Only On: 72064) |
| 114720 | 11 | 9 | 1 | Tube–Battery Drain |
| 115203 | 9 | 9 | 1 | Screw–HH |
| 115593 | 13 | 8 | 1 | Knob |
| 116397 | 2 | 31 | 2 | Relay |
| 116744 | 19 | 1:3 | 2 | Tire |
| 117127 | 5 | 3:4 | 2 | Tire |
| 117316 | 11 | 2 | 1 | Rod–Battery Hold Down |
| 147665 | 13 | 3 | 2 | Screw |
| 147665 | 16 | 17 | 2 | Screw |
| 609900 | 7 | 9 | 2 | Nut–Speed |
| 614249 | 1 | 30 | 1 | Tie Strap |
| 614249 | 12 | 17 | 1 | Tie Strap |
| 614249 | 12 | 27 | 1 | Tie Strap |
| 614249 | 14 | 11 | 1 | Tie Strap |
| 700806 | 6 | 18 | 2 | Knob |
| 700919 | 2 | 15 | 1 | Nut |
| 701178 | 6 | 10 | 2 | Cap–Protector |
| 702366 | 1 | 27 | 1 | Clip–Wire Retainer |
| 702366 | 7 | 2 | 1 | Clip–Wire Retainer |
| 702366 | 9 | 2 | 1 | Clip–Wire Retainer |
| 933141 | 13 | 7 | 1 | Pin–Spirol |
| 933148 | 13 | 12 | 1 | Pin–Spirol |

*Not Illustrated

# Toro Part Number Index (cont.)

| Part No. | Page No. | Ref. No. | Qty. | Description |
|---|---|---|---|---|
| 933270 | 5 | 5 | 2 | Pin–Roll |
| 936118 | 18 | 12 | 2 | Snap Ring |
| 9150026 | 5 | 8 | 4 | Nut–Lock |
| 9202154 | 17 | 12 | 1 | Washer–Flat |
| 9202324 | 5 | 16 | 2 | Washer–10 GA |
| 9266934 | 9 | 1 | 3 | Screw–HWHTF |
| 9267154 | 5 | 10 | 1 | Screw |
| 5–1336 | 19 | 5 | 2 | Key |
| 24–7924 | 12 | 19 | 2 | Cover–Drive Shaft |
| 28–2480 | 5 | 20 | 2 | Washer–Flat |
| 38–1420 | 6 | 2 | 1 | Switch–Seat |
| 46–8093 | 1 | 31 | 2 | Screw–TAP |
| 46–8093 | 12 | 22 | 2 | Screw–TAP |
| 48–7730 | 3 | 20 | 2 | Screw–HH |
| 48–7730 | 9 | 13 | 4 | Screw–HH |
| 49–2040 | 18 | 15 | 3 | Screw–HH |
| 61–9780 | 5 | 1 | 2 | Hubcap |
| 62–7770 | 2 | 14 | 1 | Key–Ignition |
| 65–2920 | 16 | 16 | 1 | Pad–Pedal |
| 66–0120 | 2 | 10 | 2 | Knob |
| 76–1340 | 7 | 27 | 1 | Decal–USA (Only On: 72046) |
| 78–1221 | 19 | 1:1 | 2 | Wheel |
| 78–1940–01 | 5 | 12 | 1 | Arm–Front Spindle RH |
| 78–1950–01 | 5 | 6 | 1 | Arm–Front Spindle LH |
| 78–2140 | 13 | 41 | 1 | Trunnion |
| 78–2431 | 13 | 29 | 1 | Rod |
| 78–2491–03 | 14 | 15 | 1 | Stop–PTO |
| 78–2601–01 | 5 | 13 | 2 | Spindle |
| 78–2610 | 4 | 2 | 1 | Gear–Sector |
| 78–2920 | 5 | 7:2 | 1 | Joint–Ball |
| 78–2920 | 5 | 9:2 | 1 | Joint–Ball |
| 78–5801 | 5 | 7:3 | 1 | Joint–Ball RH W/ Jam Nut |
| 78–5811 | 5 | 9:3 | 1 | Joint–Ball LH |
| 78–6810–03 | 13 | 35 | 1 | Plate |
| 78–6820–03 | 11 | 7 | 1 | Plate–Battery |
| 78–6831 | 13 | 30 | 1 | Shaft |
| 78–7360 | 13 | 33 | 1 | Rod |
| 78–7390 | 13 | 28 | 1 | Link |
| 78–7960–01 | 5 | 4 | 1 | Axle–Front |
| 78–9150–03 | 4 | 4 | 1 | Plate |
| 78–9740 | 13 | 9 | 1 | Decal–HOC Knob |
| 79–0950–03 | 6 | 17 | 1 | Bracket–Pivot RH |
| 79–0970–03 | 6 | 15 | 1 | Bracket–Pivot LH |
| 79–1250 | 13 | 27 | 2 | Pin |
| 79–3401–03 | 13 | 24 | 1 | Gage Shaft |
| 79–3500 | 8 | 10 | 1 | Reservoir |
| 79–7530 | 15 | 9 | 1 | Spring–Extension |
| 83–2720 | 19 | 6 | 10 | Bolt–Lug |
| 83–6620 | 12 | 13 | 1 | Decal–Instruction |
| 88–3870 | 3 | 6:1 | 1 | Cover–Steering Wheel |
| 88–3950 | 6 | 1 | 1 | Seat (Only On: 72046) |
| 88–3970 | 1 | 28 | 1 | Reflector–Lamp |
| 88–3980 | 8 | 2 | 1 | Gas Cap ASM |
| 88–4320 | 1 | 29 | 1 | Harness–Wire |
| 88–4590 | 15 | 4 | 1 | Bolt–Shoulder |
| 88–9930 | 13 | 2 | 1 | Switch–Micro |
| 88–9932 | 16 | 18 | 1 | Switch – Micro |
| 92–3014 | 10 | 1 | 3 | Nut & Spring ASM (Only On: 72064) |
| 92–3015 | 10 | 2 | 1 | Rotor ASM W/Bearing (Only On: 72064) |
| 92–3016 | 10 | 3 | 1 | Field ASM W/Bearing (Only On: 72064) |
| 92–6511 | 6 | 1 | 1 | Seat (Only On: 72064) |
| 92–6656 | 1 | 23 | 1 | Lens–Headlight |

*Not Illustrated

# Toro Part Number Index (cont.)

| Part No. | Page No. | Ref. No. | Qty. | Description |
|---|---|---|---|---|
| 92–6674–03 | 14 | 7 | 1 | Support–Fender |
| 92–6680 | 2 | 8 | 1 | Boot–Steering |
| 92–6686 | 18 | 10 | 1 | Pulley |
| 92–6687 | 7 | 21 | 1 | Mat–Foot RH |
| 92–6688 | 7 | 18 | 1 | Mat–Foot LH |
| 92–6702 | 4 | 10 | 1 | Shaft–Steering Lower |
| 92–6705 | 2 | 26 | 1 | Lens–Dash |
| 92–6709 | 2 | 28 | 1 | Light–Indicator (Only On: 72046) |
| 92–6710 | 13 | 11 | 1 | Grip–Handle |
| 92–6711 | 13 | 10 | 1 | Tip–Rod |
| 92–6716 | 9 | 20 | 1 | Gasket–Exhaust |
| 92–6717 | 3 | 18 | 1 | U–Joint–Steering |
| 92–6718 | 18 | 9 | 1 | Belt–Hydro |
| 92–6720 | 2 | 18 | 1 | Decal–Choke/PTO (Only On: 72046) |
| 92–6721 | 2 | 13 | 1 | Decal–Throttle/Ignition (Only On: 72046) |
| 92–6725 | 7 | 23 | 1 | Decal–HOC (Only On: 72046) |
| 92–6726 | 18 | 3 | 1 | Decal–Hydro Valve (Only On: 72046) |
| 92–6727 | 7 | 5 | 1 | Decal–Fuel Level |
| 92–6728 | 1 | 12 | 1 | Decal–Hood LH |
| 92–6729 | 1 | 13 | 1 | Decal–Hood RH |
| 92–6730 | 7 | 3 | 1 | Decal–Rear Fender |
| 92–6732 | 2 | 28 | 1 | Housing–Indicator Light (Only On: 72064) |
| 92–6737 | 8 | 8 | 1 | Hose |
| 92–6742 | 18 | 14 | 1 | Fan |
| 92–6746–01 | 7 | 13 | 1 | Footrest–LH |
| 92–6747–01 | 7 | 19 | 1 | Footrest–RH |
| 92–6750 | 6 | 3 | 2 | Spacer–Nylon |
| 92–6754 | 8 | 5 | 1 | Hose–Fuel Line |
| 92–6769 | 18 | 2 | 2 | U–Bolt |
| 92–6776 | 3 | 13 | 1 | Bracket–Detent |
| 92–6777–03 | 3 | 1 | 1 | Bracket–Support |
| 92–6778–03 | 12 | 9 | 1 | Support–Column |
| 92–6780 | 9 | 18 | 2 | Nut–HHF |
| 92–6781 | 2 | 24 | 1 | Control–Choke |
| 92–6782 | 2 | 22 | 1 | Control–Throttle |
| 92–6785 | 2 | 17 | 1 | Switch–Ignition |
| 92–6794 | 13 | 4 | 1 | Wedge–HOC Adjust |
| 92–6795–01 | 7 | 28 | 1 | Fender |
| 92–6796 | 2 | 11 | 1 | Cover–Slot RH |
| 92–6797 | 2 | 19 | 1 | Cover–Slot LH |
| 92–6798 | 3 | 11 | 1 | Cap–Rod |
| 92–6855–03 | 13 | 32 | 1 | Arm |
| 92–6859–03 | 12 | 6 | 1 | Support–Dash |
| 92–6860 | 12 | 8 | 4 | Nut–Retainer |
| 92–6862 | 9 | 19 | 1 | Muffler |
| 92–6867–01 | 9 | 17 | 1 | Shield–Muffler |
| 92–6868–03 | 14 | 4 | 1 | Bracket–Idler |
| 92–6877 | 9 | 5 | 1 | Valve–Oil Drain |
| 92–6878–03 | 9 | 21 | 1 | Baffle–Muffler |
| 92–6883 | 5 | 7 | 1 | Steering Link RH |
| 92–6884 | 5 | 9 | 1 | Steering Link LH |
| 92–6885 | 9 | 7 | 1 | Clutch–PTO (Only On: 72064) |
| 92–6888 | 9 | 6 | 1 | Pulley |
| 92–6900 | 15 | 7 | 1 | Arm–Idler |
| 92–6902 | 17 | 18 | 1 | Pad–Pedal Forward |
| 92–6903 | 17 | 1 | 1 | Pad–Pedal Reverse |
| 92–6913–03 | 17 | 2 | 1 | Pedal–Hydro |
| 92–6914–03 | 1 | 32 | 1 | Baffle–Hood Upper |
| 92–6917–03 | 1 | 10 | 1 | Bracket–Hinge RH |
| 92–6918–03 | 1 | 9 | 1 | Bracket–Hinge LH |
| 92–6936–03 | 12 | 15 | 1 | Cover–Side LH |
| 92–6937–03 | 12 | 2 | 1 | Cover–Side RH |

*Not Illustrated

# Toro Part Number Index (cont.)

| Part No. | Page No. | Ref. No. | Qty. | Description |
|---|---|---|---|---|
| 92–6943 | 18 | 13 | 1 | Spacer–Fan |
| 92–6949 | 16 | 16 | 1 | Tube–Brake |
| 92–6960 | 12 | 24 | 2 | Latch–Hood |
| 92–6962 | 17 | 7 | 1 | Bushing |
| 92–6964–03 | 14 | 6 | 1 | Bracket–HOC |
| 92–6965 | 13 | 6 | 1 | Rod–HOC |
| 92–6966 | 17 | 17 | 1 | Spacer–Hydro Pedal |
| 92–6968 | 16 | 5 | 1 | Trunnion–Brake |
| 92–6970 | 17 | 8 | 1 | Rod–Bypass |
| 92–6971 | 3 | 5 | 1 | Lever–Tilt |
| 92–6972–03 | 6 | 5 | 1 | Support–Seat |
| 92–6975 | 2 | 25 | 1 | Decal–Dash Lens (Only On: 72064) |
| 92–6977–03 | 13 | 17 | 1 | Rod–Lift Lever |
| 92–6978 | 13 | 38 | 1 | Rod–HOC Indicator |
| 92–6979 | 13 | 42 | 1 | Plate–HOC Gage |
| 92–6982 | 16 | 14 | 1 | Spacer–Brake |
| 92–6986 | 6 | 8 | 2 | Bolt–Shoulder |
| 92–6987 | 1 | 24 | 1 | Decal–Horsehead |
| 92–6988 | 16 | 8 | 1 | Rod–Brake |
| 92–6989 | 2 | 1 | 1 | Cable–Battery Red |
| 92–6990 | 11 | 1 | 1 | Cable–Battery Red |
| 92–6992–03 | 14 | 12 | 1 | Bracket–Steering |
| 92–6996–03 | 1 | 18 | 1 | Hinge–Hood RH |
| 92–6997–03 | 1 | 17 | 1 | Hinge–Hood LH |
| 92–6998 | 3 | 22 | 1 | Spacer–Yoke |
| 92–6999 | 3 | 15 | 1 | Spacer–Yoke |
| 92–7000–03 | 16 | 4 | 1 | Bracket–Park Brake |
| 92–7004–03 | 16 | 22 | 1 | Support–Park Brake |
| 92–7006 | 1 | 4 | 4 | Nut |
| 92–7007 | 13 | 39 | 1 | Spring–Extension |
| 92–7008 | 17 | 15 | 2 | Rod End |
| 92–7009 | 16 | 2 | 1 | Grip–Parking Brake |
| 92–7018 | 17 | 4 | 1 | Rod |
| 92–7020 | 7 | 25 | 4 | Screw–TTH |
| 92–7020 | 12 | 1 | 9 | Screw–TTH |
| 92–7048–03 | 1 | 21 | 1 | Bracket–Hood Hinge RH |
| 92–7049–03 | 1 | 20 | 1 | Bracket–Hood Hinge LH |
| 92–7054 | 6 | 7 | 2 | Spring–Compression |
| 92–7057–03 | 5 | 11 | 1 | Pin–Front |
| 92–7077 | 1 | 3 | 1 | Inlet–Seal Air |
| 92–7090 | 18 | 3 | 1 | Decal–Bypass (Only On: 72064) |
| 92–7092 | 7 | 23 | 1 | Decal–HOC (Only On: 72064) |
| 92–7101 | 15 | 8 | 1 | Pulley–Flat |
| 92–7102 | 15 | 13 | 2 | Pulley–Idler |
| 92–7148 | 1 | 6 | 2 | Foam–Sidepanel |
| 92–8747 | 14 | 14 | 2 | Decal–Attach A Matic |
| 92–8946 | 7 | 26 | 1 | Decal–Danger (Only On: 72046) |
| 92–9845 | 2 | 4 | 1 | Solenoid |
| 93–0302 | 12 | 12 | 1 | Decal–Slope/Park Brake (Only On: 72046) |
| 93–0354 | 31 | 9 | 1 | Bolt |
| 93–0355 | 31 | 14 | 1 | Magnet |
| 93–0356 | 31 | 7 | 1 | Plug/Packing INC 5–6 |
| 93–0360 | 31 | 3 | 1 | Ring |
| 93–0361 | 31 | 4 | 2 | Seal |
| 93–0362 | 31 | 11 | 1 | Bolt |
| 93–0363 | 31 | 8 | 11 | Screw–TAP |
| 93–0364 | 31 | 10 | 2 | Screw–TAP |
| 93–0365 | 33 | 10 | 1 | Cylinder ASM INC 6–9 |
| 93–0365 | 34 | 13 | 1 | Cylinder ASM INC 6–9 |
| 93–0370 | 33 | 3 | 1 | Spring |
| 93–0371 | 33 | 1 | 2 | Washer |
| 93–0371 | 34 | 7 | 1 | Washer |

*Not Illustrated

# Toro Part Number Index (cont.)

| Part No. | Page No. | Ref. No. | Qty. | Description |
|---|---|---|---|---|
| 93–0372 | 33 | 5 | 1 | Shaft–Pump |
| 93–0373 | 33 | 4 | 3 | Ring–Snap |
| 93–0373 | 34 | 6 | 2 | Ring–Snap |
| 93–0373 | 43 | 3 | 1 | Ring–Snap |
| 93–0374 | 33 | 2 | 1 | Bearing–Ball |
| 93–0374 | 34 | 8 | 1 | Bearing–Ball |
| 93–0375 | 34 | 5 | 1 | Housing |
| 93–0376 | 34 | 11 | 1 | Bearing–Thrust |
| 93–0386 | 34 | 9 | 1 | Shaft–Motor |
| 93–0387 | 34 | 10 | 1 | E Ring |
| 93–0388 | 35 | 7 | 2 | Thrust Metal |
| 93–0389 | 35 | 13 | 1 | Swash Plate INC 8–9 |
| 93–0392 | 35 | 11 | 1 | Bearing |
| 93–0393 | 35 | 12 | 1 | Plate–Thrust |
| 93–0394 | 35 | 10 | 1 | Plate–Thrust |
| 93–0395 | 35 | 1 | 1 | Arm |
| 93–0396 | 35 | 3 | 1 | Spring |
| 93–0397 | 35 | 2 | 1 | Shaft–Bypass |
| 93–0398 | 35 | 5 | 1 | Block Set INC 6 |
| 93–0400 | 35 | 4 | 1 | Packing |
| 93–0401 | 36 | 1 | 1 | Rod–Bypass |
| 93–0402 | 36 | 2 | 1 | Arm–Valve Release |
| 93–0403 | 36 | 3 | 1 | Pin–Roll |
| 93–0404 | 37 | 2 | 1 | Arm |
| 93–0405 | 37 | 5 | 1 | Shock Absorber |
| 93–0406 | 37 | 9 | 1 | Stud |
| 93–0407 | 37 | 3 | 1 | Bolt |
| 93–0408 | 37 | 6 | 2 | Washer |
| 93–0409 | 37 | 4 | 1 | Washer |
| 93–0410 | 37 | 7 | 1 | Ring |
| 93–0410 | 39 | 8 | 1 | Ring |
| 93–0411 | 37 | 1 | 1 | Pin–Roll |
| 93–0411 | 39 | 1 | 2 | Pin–Roll |
| 93–0412 | 37 | 8 | 1 | Pin–Cotter |
| 93–0412 | 39 | 12 | 1 | Pin–Cotter |
| 93–0413 | 38 | 1 | 1 | Fulcrum |
| 93–0414 | 38 | 2 | 1 | Shaft ASM INC 3–4 |
| 93–0417 | 38 | 5 | 1 | Washer |
| 93–0418 | 38 | 6 | 1 | Packing |
| 93–0418 | 39 | 3 | 2 | Packing |
| 93–0419 | 38 | 7 | 1 | Packing |
| 93–0420 | 38 | 8 | 1 | Nut |
| 93–0421 | 39 | 9 | 1 | Bushing |
| 93–0422 | 39 | 11 | 1 | Return–Brake |
| 93–0423 | 39 | 18 | 1 | Rod ASM INC 13–17 |
| 93–0424 | 39 | 17 | 1 | Adjuster |
| 93–0425 | 39 | 15 | 1 | Guide–Spring |
| 93–0426 | 39 | 14 | 1 | Holder–Spring |
| 93–0427 | 39 | 16 | 1 | Spring |
| 93–0428 | 39 | 13 | 1 | Rod–Adjuster |
| 93–0429 | 39 | 19 | 1 | Arm–Brake |
| 93–0430 | 39 | 10 | 1 | Shaft–Brake |
| 93–0431 | 39 | 5 | 1 | Rod–Brake |
| 93–0432 | 39 | 4 | 1 | Arm–Brake A |
| 93–0433 | 39 | 2 | 1 | Arm–Brake B |
| 93–0434 | 39 | 7 | 1 | Pin–Snap |
| 93–0435 | 39 | 6 | 2 | Washer |
| 93–0440 | 40 | 2 | 1 | Differential Gear ASM |
| 93–0443 | 40 | 3 | 1 | Shaft–Pinion |
| 93–0444 | 40 | 1 | 2 | Washer–Thrust |
| 93–0445 | 40 | 4 | 1 | Gear–Final |
| 93–0446 | 41 | 1 | 1 | Bearing |

*Not Illustrated

# Toro Part Number Index (cont.)

| Part No. | Page No. | Ref. No. | Qty. | Description |
|---|---|---|---|---|
| 93–0447 | 41 | 2 | 1 | Shaft–Final Pinion |
| 93–0448 | 41 | 3 | 1 | Gear–Final Shaft |
| 93–0449 | 41 | 4 | 1 | Washer |
| 93–0450 | 41 | 5 | 1 | Bushing |
| 93–0451 | 42 | 1 | 2 | Seal |
| 93–0452 | 42 | 2 | 1 | Shaft–Axle Right |
| 93–0453 | 42 | | 1 | Shaft–Axle Left |
| 93–0454 | 42 | 3 | 2 | Bushing |
| 93–0455 | 42 | 4 | 2 | Washer–Thrust |
| 93–0456 | 42 | 5 | 2 | Ring |
| 93–0457 | 43 | 1 | 3 | Bolt W/Washer |
| 93–0458 | 43 | 2 | 1 | Band–Brake Interlock |
| 93–0460 | 43 | 4 | 1 | Drum–Brake |
| 93–0461 | 32 | 1 | 2 | Holder–Bypass |
| 93–0465 | 32 | 5 | 2 | Packing |
| 93–0466 | 32 | 6 | 2 | Ring–Back Up |
| 93–0471 | 32 | 11 | 2 | Pin–Knock |
| 93–0472 | 32 | 12 | 2 | Bushing |
| 93–0474 | 32 | 14 | 1 | Plug |
| 93–0475 | 32 | 15 | 1 | Packing |
| 93–0476 | 32 | 16 | 1 | Connector |
| 93–0478 | 32 | 18 | 1 | Filter |
| 93–0479 | 32 | 19 | 3 | Bolt |
| 93–0480 | 32 | 20 | 1 | Plug |
| 93–0481 | 32 | 17 | 1 | Packing |
| 93–0481 | 32 | 21 | 1 | Packing |
| 93–0482 | 32 | 22 | 1 | Valve ASM A1 INC 1–10 |
| 93–0483 | 32 | 23 | 1 | Valve ASM A2 |
| 93–0484 | 32 | 13 | 1 | Case INC 11–12 & 20–23 |
| 93–0486–03 | 12 | 14 | 1 | Hoodstand W/Decals (Only On: 72046) |
| 93–0488–03 | 12 | 14 | 1 | Hoodstand W/Decals (Only On: 72064) |
| 93–0489–01 | 7 | 24 | 1 | Plate–Footrest W/Decal (Only On: 72046) |
| 93–0490 | 1 | 2 | 1 | Hood |
| 93–0491 | 1 | 7 | 1 | Sidepanel–LH Hood |
| 93–0492 | 1 | 8 | 1 | Sidepanel–RH Hood |
| 93–0494 | 1 | 22 | 1 | Grille & Screen ASM |
| 93–0520–03 | 16 | 21 | 1 | Bracket–Micro Sw |
| 93–0523–03 | 13 | 44 | 1 | Bracket–Pivot Linkage |
| 93–0540 | 16 | 9 | 1 | Spring–Extension |
| 93–0546–03 | 18 | 8 | 1 | Strap–Torque |
| 93–1131 | 12 | 23 | 1 | Trim–Seal |
| 93–1144 | 8 | 6 | 2 | Spacer–Fuel Tank |
| 93–1146 | 3 | 3 | 1 | Bushing–Steering |
| 93–1148–03 | 3 | 12 | 1 | Column |
| 93–1357 | 3 | 14 | 1 | Spring–Extension |
| 93–3167 | 16 | 1 | 1 | Rod–Park Brake |
| 93–3240 | 16 | 20 | 1 | Seal–Plunger |
| 93–3658 | 15 | 12 | 2 | Spacer |
| 93–3659–03 | 19 | 2 | 2 | Hub–Wheel |
| 93–6668 | 11 | 13 | 1 | Decal–Battery Charge Ins (Only On: 72064) |
| 93–7255 | 2 | 13 | 1 | Decal–Dash (Only On: 72064) |
| 93–7256 | 2 | 18 | 1 | Decal–Dash (Only On: 72064) |
| 93–7276 | 11 | 14 | 1 | Decal–Danger (Only On: 72064) |
| 93–7313 | 12 | 12 | 1 | Decal–Danger (Only On: 72064) |
| 93–7314 | 7 | 26 | 1 | Decal–Danger (Only On: 72064) |
| 93–7323 | 13 | 16 | 1 | Decal–Lift (Only On: 72064) |
| 93–7324 | 14 | 13 | 2 | Decal–Installation (Only On: 72064) |
| 93–7328 | 8 | 1 | 1 | Decal–Oil Check (Only On: 72064) |
| 93–9275 | 8 | 15 | 1 | Guard–Fan (Only On: 72064) |
| 93–9801 | 5 | 3:1 | 2 | ASM–Wheel W/Zerk |
| 93–9998 | 2 | 16 | 1 | Switch–PTO |
| 94–0293 | 7 | 1 | 1 | Decal–Model/Serial Ce (Only On: 72064) |

*Not Illustrated

# Toro Part Number Index (cont.)

| Part No. | Page No. | Ref. No. | Qty. | Description |
|---|---|---|---|---|
| 94–1248 | 2 | 25 | 1 | Decal–Dash Lens (Only On: 72046) |
| 94–1712–03 | 12 | 4 | 1 | Panel–Support |
| 94–1717–03 | 7 | 6 | 1 | W.a.–Rear Panel |
| 94–1720 | 16 | 16 | 1 | Lever–Brake |
| 94–1722–03 | 16 | 10 | 1 | Lever–Brake |
| 94–1749–03 | 12 | 18 | 1 | Firewall |
| 94–1894 | 2 | 7 | 1 | Dash–Hydro |
| 94–1980 | 1 | 1 | 2 | Foam–Hood |
| 94–2514 | 9 | 7 | 1 | Clutch–Electric PTO (Only On: 72046) |
| 94–2668 | 14 | 10 | 1 | Frame Wa |
| 94–2862 | 11 | 10 | 1 | Harness–Wire |
| 94–2869 | 6 | 20 | 2 | Washer–Flat |
| 94–2869 | 7 | 12 | 4 | Washer–Flat |
| 94–2874 | 3 | 9 | 1 | Shaft–Steer Upper |
| 94–2966 | 2 | 9 | 1 | Clip–Boot |
| 94–2970 | 9 | 3 | 1 | Decal–Toro Power Plus 15 |
| 94–2973 | 12 | 16 | 2 | Decal–265–H |
| 94–2979 | 8 | 3 | 1 | Tank–Gas |
| 94–3329 | 9 | 4 | 1 | Engine–Kohler (Only On: 72046) |
| 94–3330 | 9 | 4 | 1 | Engine–Kohler (Only On: 72064) |
| 94–3500 | 3 | 6 | 1 | Steering Wheel–14" (Only On: 72046) |
| 94–3501 | 3 | 6 | 1 | Steering Wheel–Soft Touc (Only On: 72064) |
| 94–3552–03 | 13 | 34 | 1 | Lift Arm W.a. |
| 94–3761–03 | 13 | 15 | 1 | Lift Lever Wa |
| 94–4205 | 18 | 4 | 1 | Transaxle–Hydro |
| 94–4206 | 31 | 1 | 1 | Upper Case ASM INC 2–6 |
| 94–4207 | 31 | 13 | 1 | Case–Lower |
| 94–4208 | 2 | 27 | 1 | Hourmeter |
| 94–4233–03 | 16 | 15 | 1 | Brake Pedal Wa |
| 94–4243–01 | 7 | 24 | 1 | Plate–Footrest W/Decal (Only On: 72064) |
| 94–4909 | 6 | 1:1 | 1 | Trim–Seat (Service) (Only On: 72064) |
| 237–141 | 2 | 6 | 1 | Grommet |
| 2412–98 | 8 | 4 | 2 | Clamp–Hose |
| 2412–129 | 8 | 9 | 2 | Clamp–Hose |
| 256–90 | 13 | 31 | 2 | Bushing–Flange |
| 256–90 | 16 | 12 | 2 | Bushing–Flange |
| 302–5 | 5 | 14 | 2 | Fitting–Grease |
| 302–11 | 5 | 15 | 1 | Fitting–Grease 1/4–28x45 |
| 302–26 | 17 | 16 | 1 | Fitting–Grease |
| 321–4 | 2 | 5 | 2 | Screw–HH |
| 321–4 | 3 | 2 | 4 | Screw–HH |
| 321–4 | 7 | 8 | 2 | Screw–HH |
| 321–4 | 8 | 7 | 2 | Screw–HH |
| 321–4 | 11 | 3 | 2 | Screw–HH |
| 321–4 | 12 | 10 | 4 | Screw–HH |
| 322–3 | 1 | 15 | 2 | Screw–HH |
| 322–3 | 3 | 17 | 1 | Screw–HH |
| 322–5 | 6 | 4 | 4 | Screw–HH |
| 322–5 | 14 | 8 | 1 | Screw–HH |
| 322–5 | 15 | 14 | 2 | Screw–HH |
| 322–6 | 18 | 1 | 1 | Screw–HH |
| 322–12 | 18 | 7 | 1 | Screw HH |
| 322–17 | 3 | 23 | 1 | Screw–HH |
| 323–7 | 17 | 13 | 1 | Screw–HH |
| 323–10 | 15 | 2 | 3 | Screw–HH |
| 323–10 | 17 | 10 | 1 | Screw–HH |
| 3217–9 | 3 | 7 | 1 | Nut–HH |
| 3218–3 | 19 | 4 | 4 | Nut–HJ |
| 3220–3 | 17 | 3 | 2 | Nut–Hex Jam |
| 3229–11 | 12 | 5 | 4 | Bolt–CARR |
| 3230–1 | 1 | 26 | 2 | Screw–CARR |
| 3230–2 | 6 | 19 | 4 | Screw–CARR |

*Not Illustrated

# Toro Part Number Index (cont.)

| Part No. | Page No. | Ref. No. | Qty. | Description |
|---|---|---|---|---|
| 3230–2 | 7 | 4 | 6 | Screw–CARR |
| 3230–2 | 14 | 3 | 2 | Screw–CARR |
| 3230–20 | 7 | 15 | 4 | Bolt–CARR |
| 3230–23 | 7 | 22 | 3 | Screw–CARR |
| 3230–23 | 7 | 29 | 1 | Screw–CARR |
| 3231–4 | 4 | 12 | 1 | Bolt–CARR |
| 3231–25 | 9 | 14 | 2 | Screw–CARR |
| 3231–25 | 13 | 21 | 2 | Screw–CARR |
| 3243–5 | 19 | 3 | 4 | Screw–Set |
| 3245–32 | 4 | 8:1 | 1 | Screw–Set |
| 3245–32 | 18 | 11 | 1 | Screw–Set |
| 3253–4 | 3 | 19 | 2 | Washer–Lock |
| 3253–4 | 9 | 12 | 4 | Washer–Lock |
| 3253–5 | 17 | 14 | 1 | Washer–Lock |
| 3253–7 | 3 | 8 | 1 | Washer–Lock |
| 3256–22 | 7 | 7 | 2 | Washer–Flat |
| 3256–22 | 8 | 12 | 4 | Washer–Flat |
| 3256–23 | 3 | 16 | 2 | Washer–Flat |
| 3256–23 | 7 | 10 | 2 | Washer–Flat |
| 3256–23 | 14 | 2 | 2 | Washer–Flat |
| 3256–23 | 15 | 15 | 2 | Washer–Flat |
| 3256–23 | 16 | 7 | 1 | Washer–Flat |
| 3256–23 | 18 | 5 | 5 | Washer–Flat |
| 3256–24 | 9 | 15 | 2 | Washer–Flat |
| 3256–24 | 13 | 22 | 2 | Washer–Flat |
| 3256–24 | 15 | 6 | 7 | Washer–Flat |
| 3256–24 | 16 | 13 | 1 | Washer–Flat |
| 3256–24 | 17 | 6 | 5 | Washer–Flat |
| 3256–26 | 13 | 20 | 6 | Washer–Flt |
| 3256–28 | 3 | 10 | 1 | Washer–Flat |
| 3256–49 | 6 | 13 | 4 | Washer–Flt |
| 3272–2 | 17 | 9 | 1 | Pin–Cotter |
| 3272–6 | 13 | 18 | 1 | Pin–Cotter |
| 3272–6 | 16 | 6 | 2 | Pin–Cotter |
| 3272–16 | 17 | 11 | 1 | Pin–Cotter |
| 3272–17 | 5 | 2 | 2 | Pin–Cotter |
| 3290–282 | 6 | 11 | 4 | Pop Rivet |
| 3290–354 | 13 | 1 | 1 | Nut–Speed |
| 3290–354 | 16 | 19 | 1 | Nut–Speed |
| 3290–479 | 7 | 17 | 14 | Fastener–Panel |
| 3296–8 | 3 | 24 | 4 | Nut–Lock |
| 3296–8 | 12 | 7 | 4 | Nut–Lock |
| 3296–23 | 13 | 26 | 1 | Nut–Lock |
| 3296–29 | 1 | 19 | 4 | Nut–Lock |
| 3296–29 | 3 | 21 | 2 | Nut–Lock |
| 3296–29 | 6 | 16 | 6 | Nut–Lock |
| 3296–29 | 7 | 11 | 14 | Nut–Lock |
| 3296–29 | 14 | 1 | 2 | Nut–Lock |
| 3296–29 | 14 | 9 | 1 | Nut–Lock |
| 3296–29 | 15 | 3 | 3 | Nut–Lock |
| 3296–29 | 18 | 6 | 6 | Nut–Lock |
| 3296–39 | 9 | 16 | 2 | Nut–Lock |
| 3296–39 | 13 | 23 | 2 | Nut–Lock |
| 3296–39 | 17 | 5 | 1 | Nut–Lock |
| 3296–42 | 2 | 3 | 2 | Nut–Lock |
| 3296–42 | 8 | 13 | 2 | Nut–Lock |
| 3296–42 | 12 | 11 | 3 | Nut–Lock |
| 3296–58 | 6 | 9 | 2 | Nut–Flange |
| 3296–59 | 15 | 10 | 4 | Nut–Lock |
| 32103–22 | 11 | 4 | 4 | Nut–Wing |
| 32103–22 | 12 | 21 | 4 | Nut–Wing |
| 32104–96 | 8 | 16 | 2 | Screw–HHST |

*Not Illustrated

# Toro Part Number Index (cont.)

| Part No. | Page No. | Ref. No. | Qty. | Description |
|---|---|---|---|---|
| 32104–118 | 2 | 29 | 3 | Screw–PH |
| 32105–15 | 1 | 5 | 12 | Screw–HH |
| 32120–47 | 13 | 19 | 5 | Ring–Retaining |
| 32121–25 | 13 | 40 | 1 | Pin–Roll |
| 32121–69 | 16 | 11 | 1 | Pin–Spring |
| 32121–103 | 13 | 37 | 1 | Pin–Spring |
| 32128–10 | 1 | 14 | 8 | Nut–Lock HHF |
| 32144–4 | 12 | 20 | 2 | Screw–TAP |
| 32144–4 | 13 | 5 | 1 | Screw–TAP |
| 32144–8 | 2 | 30 | 2 | Screw–PPH |
| 32144–8 | 12 | 26 | 2 | Screw–PPH |
| 32144–14 | 1 | 11 | 2 | Screw–HH |
| 32144–14 | 11 | 11 | 1 | Screw–HH |
| 32144–14 | 12 | 25 | 2 | Screw–HH |
| 32144–14 | 13 | 36 | 2 | Screw–HH |
| 32144–14 | 13 | 45 | 2 | Screw–HH |
| 32144–14 | 14 | 5 | 6 | Screw–HH |
| 32144–14 | 16 | 3 | 4 | Screw–HH |
| 32144–14 | 8 | 14 | 2 | Screw–HH (Only On: 72064) |
| 32144–32 | 1 | 33 | 2 | Screw–Plastic |
| 32144–32 | 2 | 23 | 4 | Screw–Plastic |
| 32149–2 | 2 | 2 | 2 | Nut–Hex Lock |
| 32149–2 | 12 | 3 | 2 | Nut–Hex Lock |

*Not Illustrated

# MAINTENANCE RECORD

| Date | | | | | | | | |
|---|---|---|---|---|---|---|---|---|
| | | | | | | | | |
| | | | | | | | | |
| | | | | | | | | |
| | | | | | | | | |
| | | | | | | | | |
| | | | | | | | | |
| | | | | | | | | |
| | | | | | | | | |
| | | | | | | | | |
| | | | | | | | | |
| | | | | | | | | |
| | | | | | | | | |
| | | | | | | | | |
| | | | | | | | | |
| | | | | | | | | |
| | | | | | | | | |
| | | | | | | | | |
| | | | | | | | | |
| | | | | | | | | |
| | | | | | | | | |
| | | | | | | | | |
| | | | | | | | | |
| | | | | | | | | |
| | | | | | | | | |
| | | | | | | | | |
| | | | | | | | | |
| | | | | | | | | |
| | | | | | | | | |
| | | | | | | | | |
| | | | | | | | | |
| | | | | | | | | |

# MAINTENANCE RECORD

| Date | | | | | | | | |
|---|---|---|---|---|---|---|---|---|
| | | | | | | | | |
| | | | | | | | | |
| | | | | | | | | |
| | | | | | | | | |
| | | | | | | | | |
| | | | | | | | | |
| | | | | | | | | |
| | | | | | | | | |
| | | | | | | | | |
| | | | | | | | | |
| | | | | | | | | |
| | | | | | | | | |
| | | | | | | | | |
| | | | | | | | | |
| | | | | | | | | |
| | | | | | | | | |
| | | | | | | | | |
| | | | | | | | | |
| | | | | | | | | |
| | | | | | | | | |
| | | | | | | | | |
| | | | | | | | | |
| | | | | | | | | |
| | | | | | | | | |
| | | | | | | | | |
| | | | | | | | | |
| | | | | | | | | |
| | | | | | | | | |
| | | | | | | | | |
| | | | | | | | | |
| | | | | | | | | |