Form No. 3364-796 Rev B

TORO®

Count on it.

Operator's Manual

TX 525 Compact Utility Loader

Model No. 22323—Serial No. 290000501 and Up

Model No. 22324—Serial No. 290000501 and Up

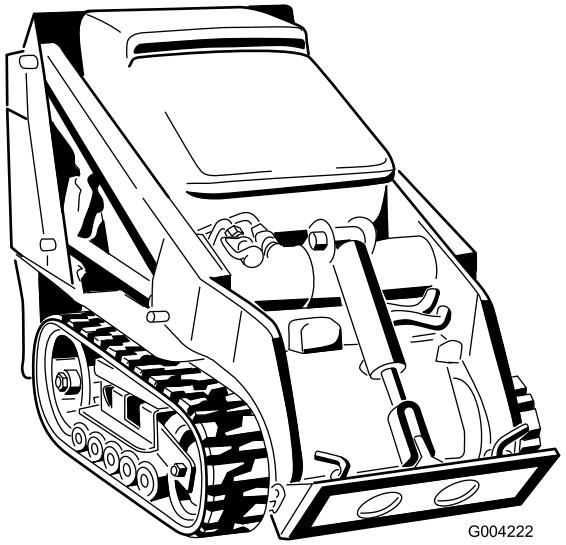

G004222

CE

To register your product or download an *Operator's Manual* or *Parts Catalog* at no charge, go to www.Toro.com.

Original Instructions (EN)

This product complies with all relevant European directives, for details please see the separate product specific Declaration of Conformity (DOC) sheet.

WARNING

CALIFORNIA
Proposition 65 Warning

Diesel engine exhaust and some of its constituents are known to the State of California to cause cancer, birth defects, and other reproductive harm.

Because in some areas there are local, state, or federal regulations requiring that a spark arrester be used on the engine of this machine, a spark arrester is available as an option. If you require a spark arrestor, contact your Authorized Toro Service Dealer.

Genuine Toro spark arresters are approved by the USDA Forestry Service.

Important: It is a violation of California Public Resource Code Section 4442 to use or operate the engine on any forest-covered, brush-covered, or grass-covered land without a spark arrester muffler maintained in working order, or the engine constricted, equipped, and maintained for the prevention of fire. Other states or federal areas may have similar laws.

The enclosed *Engine Owner's Manual* is supplied for information regarding the US Environmental Protection Agency (EPA) and the California Emission Control Regulation of emission systems, maintenance, and warranty. Replacements may be ordered through the engine manufacturer.

Introduction

This machine is a compact utility loader intended for use in various earth and materials moving activities for landscaping and construction work. It is designed to operate a wide variety of attachments each of which perform a specialized function.

Read this information carefully to learn how to operate and maintain your product properly and to avoid injury and product damage. You are responsible for operating the product properly and safely.

You may contact Toro directly at www.Toro.com for product and accessory information, help finding a dealer, or to register your product.

Whenever you need service, genuine Toro parts, or additional information, contact an Authorized Service Dealer or Toro Customer Service and have the model and serial numbers of your product ready. Figure 1 identifies the location of the model and serial numbers on the product. Write the numbers in the space provided.

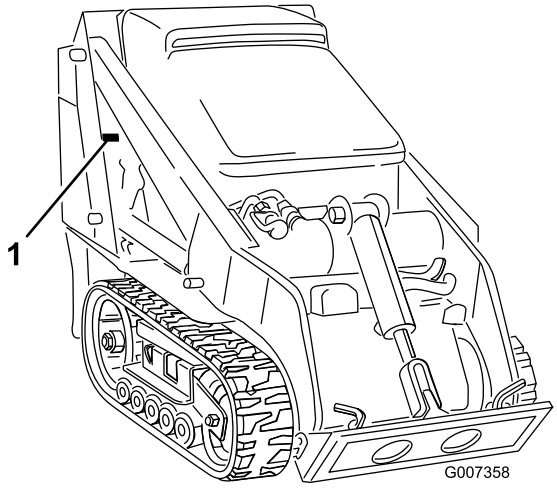

Figure 1

1. Model and serial number location

Model No. _____

Serial No. _____

This manual identifies potential hazards and has safety messages identified by the safety alert symbol (Figure 2), which signals a hazard that may cause serious injury or death if you do not follow the recommended precautions.



Figure 2

1. Safety alert symbol

This manual uses 2 other words to highlight information. **Important** calls attention to special mechanical information and **Note** emphasizes general information worthy of special attention.

© 2010—The Toro® Company
8111 Lyndale Avenue South
Bloomington, MN 55420

Contact us at www.Toro.com.
Printed in the USA.
All Rights Reserved

Contents

Introduction 2
Safety 4
- Safe Operating Practices 4
- Sound Pressure Level 6
- Sound Power 6
- Vibration Level 6
- Stability Data 7
- Slope Indicator 8
- Safety and Instructional Decals 9

Product Overview 13
- Controls 13
- Specifications 16
- Attachments/Accessories 16

Operation 17
- Adding Fuel 17
- Filling the Fuel Tank 17
- Checking the Engine Oil Level 18
- Checking the Hydraulic Fluid Level 19
- Checking, Adding, and Bleeding the Engine Coolant 20
- Bleeding the Fuel System 21
- Starting and Stopping the Engine 21
- Stopping the Traction Unit 22
- Moving a Non-functioning Traction Unit 22
- Using the Cylinder Lock 22
- Using Attachments 23
- Securing the Traction Unit for Transport 25
- Lifting the Traction Unit 25

Maintenance 26
- Recommended Maintenance Schedule(s) 26
- Premaintenance Procedures 27
  - Opening the Hood 27
  - Closing the Hood 27
  - Opening the Rear Access Cover 28
  - Closing the Rear Access Cover 28
  - Removing the Side Screens 28
  - Installing the Side Screens 28
- Lubrication 29
  - Greasing the Traction Unit 29
- Engine Maintenance 29
  - Servicing the Air Cleaner 29
  - Servicing the Engine Oil 30
- Fuel System Maintenance 32
  - Checking the Fuel Lines and Connections 32
  - Draining the Fuel Filter/Water Separator 32
  - Replacing the Fuel Filter Canister and In-line Filter 32
  - Draining the Fuel Tank 33
- Electrical System Maintenance 33
  - Servicing the Battery 33
- Drive System Maintenance 36
  - Servicing the Tracks 36
- Cooling System Maintenance 39
  - Servicing the Cooling System 39
- Belt Maintenance 40
  - Checking the Condition of the Hydraulic Pump Belt 40
  - Checking the Alternator/Fan Belt Tension 40
- Controls System Maintenance 41
  - Adjusting the Traction Control Alignment 41
  - Adjusting the Traction Control Neutral Position 41
  - Adjusting the Tracking of the Traction Control, Full Forward Position 42
- Hydraulic System Maintenance 43
  - Replacing the Hydraulic Filter 43
  - Changing the Hydraulic Fluid 43
  - Checking the Hydraulic Lines 44
- Cleaning 45
  - Removing Debris from the Traction Unit 45
  - Cleaning the Chassis 45

Storage 45
Troubleshooting 46
Schematics 49

Safety

Improper use or maintenance by the operator or owner can result in injury. To reduce the potential for injury, comply with these safety instructions and always pay attention to the safety alert symbol ⚠, which means: *Caution*, *Warning*, or *Danger*—personal safety instruction. Failure to comply with the instruction may result in personal injury or death.

Safe Operating Practices

This product is capable of amputating hands and feet. Always follow all safety instructions to avoid serious injury or death.

⚠ WARNING

Engine exhaust contains carbon monoxide, an odorless, deadly poison that can kill you.

Do not run the engine indoors or in an enclosed area.

Training

- Read the *Operator's Manual* and other training material. If the operator(s) or mechanic(s) can not read English, it is the owner's responsibility to explain this material to them.
- Become familiar with the safe operation of the equipment, operator controls, and safety signs.
- All operators and mechanics should be trained. The owner is responsible for training the users.
- Never let children or untrained people operate or service the equipment. Local regulations may restrict the age of the operator.
- The owner/user can prevent and is responsible for accidents or injuries occurring to himself or herself, other people or property.

Preparation

- Evaluate the terrain to determine what accessories and attachments are needed to properly and safely perform the job. Only use accessories and attachments approved by the manufacturer.
- Wear appropriate clothing including hard hat, safety glasses, long pants, safety shoes, and hearing protection. Long hair, loose clothing or jewelry may get tangled in moving parts.
- Inspect the area where the equipment is to be used and remove all objects such as rocks, toys, and wire which can be thrown by the machine.
- Use extra care when handling fuels. They are flammable and vapors are explosive.
  - Use only an approved container
  - Never remove the fuel cap or add fuel with the engine running. Allow the engine to cool before refueling. Do not smoke.
  - Never refuel or drain the machine indoors.
- Check that the operator's presence controls, safety switches, and shields are attached and functioning properly. Do not operate unless they are functioning properly.

Operation

- Never run an engine in an enclosed area.
- Only operate in good light, keeping away from holes and hidden hazards.
- Be sure all drives are in neutral and parking brake is engaged before starting the engine. Only start the engine from the operator's position.
- Slow down and use extra care on hillsides. Be sure to travel in the recommended direction on hillsides. Turf conditions can affect the machine's stability.
- Slow down and use caution when making turns and when changing directions on slopes.
- Never operate with the guards not securely in place. Be sure all interlocks are attached, adjusted properly, and functioning property.
- Do not change the engine governor setting or overspeed the engine.
- Stop on level ground, lower implements, disengage the auxiliary hydraulics, engage parking brake, shut off the engine before leaving the operator's position for any reason.
- Keep hands and feet away from moving attachments.
- Look behind and down before backing up to be sure of a clear path.
- Never carry passengers and keep pets and bystanders away.
- Slow down and use caution when making turns and crossing roads and sidewalks.
- Do not operate the machine under the influence of alcohol or drugs.
- Use care when loading or unloading the machine into a trailer or truck.
- Use care when approaching blind corners, shrubs, trees, or other objects that may obscure vision.
- Read all attachment manuals.

- Ensure that the area is clear of other people before operating the traction unit. Stop the traction unit if anyone enters the area.
- Never leave a running traction unit unattended. Always lower the loader arms, stop the engine, set the parking brake, and remove the key before leaving.
- Do not exceed the rated operating capacity, as the traction unit may become unstable which may result in loss of control.
- Do not carry a load with the arms raised. Always carry loads close to the ground.
- Do not over-load the attachment and always keep the load level when raising the loader arms. Logs, boards, and other items could roll down the loader arms, injuring you.
- Never jerk the controls; use a steady motion.
- Watch for traffic when operating near or crossing roadways.
- Do not touch parts which may be hot from operation. Allow them to cool before attempting to maintain, adjust, or service.
- Check for overhead clearances (i.e. branches, doorways, electrical wires) before driving under any objects and do not contact them.
- Ensure that you operate the traction unit in areas where there are no obstacles in close proximity to the operator. Failure to maintain adequate distance from trees, walls, and other barriers may result in injury as the traction unit backs up during operation if the operator is not attentive to the surroundings. Only operate the unit in areas where there is sufficient clearance for the operator to safely maneuver the product.
- Before digging, have the area marked for underground utilities, and do not dig in marked areas.
- Locate the pinch point areas marked on the traction unit and attachments and keep hands and feet away from these areas.
- Before operating the traction unit with an attachment, ensure that the attachment is properly installed.
- Lightning can cause severe injury or death. If lightning is seen or thunder is heard in the area, do not operate the machine; seek shelter.

Slope Operation

Slopes are a major factor related to loss-of-control and tip-over accidents, which can result in severe injury or death. All slopes require extra caution.

- Do not operate the traction unit on hillsides or slopes exceeding the angles recommended in Stability Data (page 7), and those in the attachment *Operator's Manual*. See also the Slope Indicator (page 8).
- **Operate up and down slopes with the heavy end of the traction unit uphill.** Weight distribution changes. An empty bucket will make the rear of the traction unit the heavy end, and a full bucket will make the front of the traction unit the heavy end. Most other attachments will make the front of traction unit the heavy end.
- Raising the loader arms on a slope will affect the stability of the machine. Whenever possible, keep the loader arms in the lowered position when on slopes.
- Removing an attachment on a slope will make the rear of the traction unit heavy. Refer to Stability Data (page 7), to determine whether the attachment can be safely removed on the slope.
- Remove obstacles such as rocks, tree limbs, etc. from the work area. Watch for holes, ruts, or bumps, as uneven terrain could overturn the traction unit. Tall grass can hide obstacles.
- Use only Toro-approved attachments. Attachments can change the stability and the operating characteristics of the traction unit. Warranty may be voided if used with unapproved attachments.
- Keep all movements on slopes slow and gradual. Do not make sudden changes in speed or direction.
- Avoid starting or stopping on a slope. If the traction unit loses traction, proceed slowly, straight down the slope.
- Avoid turning on slopes. If you must turn, turn slowly and keep the heavy end of the traction unit uphill.
- Do not operate near drop-offs, ditches, or embankments. The traction unit could suddenly turn over if a track goes over the edge of a cliff or ditch, or if an edge caves in.
- Do not operate on wet grass. Reduced traction could cause sliding.
- Do not park the traction unit on a hillside or slope without lowering the attachment to the ground, setting the parking brake, and chocking the tracks.

Maintenance and Storage

- Disengage the auxiliary hydraulics, lower the attachment, set the parking brake, stop the engine, and remove the key. Wait for all movement to stop before adjusting, cleaning, or repairing.

- Clean debris from attachments, drives, mufflers, and engine to help prevent fires. Clean up oil or fuel spillage.
- Let the engine cool before storing and do not store near flame.
- Do not store fuel near flames or drain indoors.
- Park the machine on level ground. Never allow untrained personnel to service the machine.
- Use jack stands to support components when required.
- Carefully release pressure from components with stored energy.
- Disconnect the battery before making any repairs. Disconnect the negative terminal first and the positive last. Reconnect positive first and negative last.
- Keep hands and feet away from moving parts. If possible, do not make adjustments with the engine running.
- Charge batteries in an open well ventilated area, away from spark and flames. Unplug the charger before connecting or disconnecting it from the battery. Wear protective clothing and use insulated tools.
- Keep all parts in good working condition and all hardware tightened. Replace all worn or damaged decals.
- If any maintenance or repair requires the loader arms to be in the raised position, secure the arms in the raised position with the hydraulic cylinder lock.
- Secure the loader arm valve with the loader valve lock anytime you need to stop the machine with the loader arms raised.
- Keep nuts and bolts tight. Keep equipment in good condition.
- Never tamper with safety devices.
- Keep the traction unit free of grass, leaves, or other debris build-up. Clean up oil or fuel spillage. Allow the traction unit to cool before storing.
- Use extra care when handling fuels. They are flammable and vapors are explosive.
  - Use only an approved container.
  - Never remove the fuel cap or add fuel when the engine is running. Allow the engine to cool before refueling. Do not smoke.
  - Never refuel the traction unit indoors.
  - Never store the traction unit or fuel container inside where there is an open flame, such as near a water heater or furnace.
  - Never fill a container while it is inside a vehicle, trunk, pick-up bed, or any surface other than the ground.
  - Keep container nozzle in contact with the tank during filling.
- Stop and inspect the equipment if you strike an object. Make any necessary repairs before restarting.
- Use only genuine Toro replacement parts to ensure that original standards are maintained.
- Battery acid is poisonous and can cause burns. Avoid contact with skin, eyes, and clothing. Protect your face, eyes, and clothing when working with a battery.
- Battery gases can explode. Keep cigarettes, sparks and flames away from the battery.
- Keep your body and hands away from pin hole leaks or nozzles that eject high pressure hydraulic fluid. Use cardboard or paper to find hydraulic leaks; never use your hands. Hydraulic fluid escaping under pressure can penetrate skin and cause injury requiring surgery within a few hours by a qualified surgeon or gangrene may result.

Sound Pressure Level

Sound Pressure Level This unit has a sound pressure level at the operator's ear of 93 dBA, which includes an Uncertainty Value (K) of 1 dBA.

Sound pressure level was determined according to the procedures outlined in EN 11201.

Sound Power

This unit has a guaranteed sound power level of 101 dBA, which includes an Uncertainty Value (K) of 1 dBA.

The sound power level was determined according to the procedures outlined in ISO 6395.

Vibration Level

Measured vibration level for right hand = 1.5 m/s^2

Measured vibration level for left hand = 1.3 m/s^2

Uncertainty Value (K) = 0.8 m/s^2

Measured values were determined according to the procedures outlined in EN ISO 20643.

Stability Data

The following tables list the maximum slope recommended for the traction unit in the positions listed in the tables. Slopes over the listed degree may cause the traction unit to become unstable. The data in the tables assume that the loader arms are fully lowered; raised arms may affect the stability.

In each attachment manual is a set of three stability ratings, one for each hill position. To determine the maximum slope you can traverse with the attachment installed, find the degree of slope that corresponds to the stability ratings of the attachment. Example: If the attachment installed on a TX model 22323 traction unit has a Front Uphill rating of B, a Rear Uphill rating of D, and a Side Uphill rating of C, then you could drive forward up a 19° slope, rearward up a 12° slope, or sideways on a 14° slope, as listed in the following table.

Model 22323			
	Maximum Recommended Slope when Operating with:		
Configuration	**Front Uphill** 	**Rear Uphill** 	**Side Uphill** 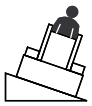
Traction unit without attachment	11°	21°	19°
Traction unit with an attachment rated with one of the following stability ratings for each slope position:*			
A	25°	25°	20°
B	19°	19°	18°
C	16°	15°	14°
D	10°	12°	9°
E	5°	5°	5°

Model 22324			
	Maximum Recommended Slope when Operating with:		
Configuration	**Front Uphill** 	**Rear Uphill** 	**Side Uphill** 
Traction unit without attachment	12°	19°	21°
Traction unit with an attachment rated with one of the following stability ratings for each slope position:*			
A	25°	25°	23°
B	22°	22°	20°
C	18°	16°	14°
D	10°	10°	10°
E	5°	5°	5°

Slope Indicator

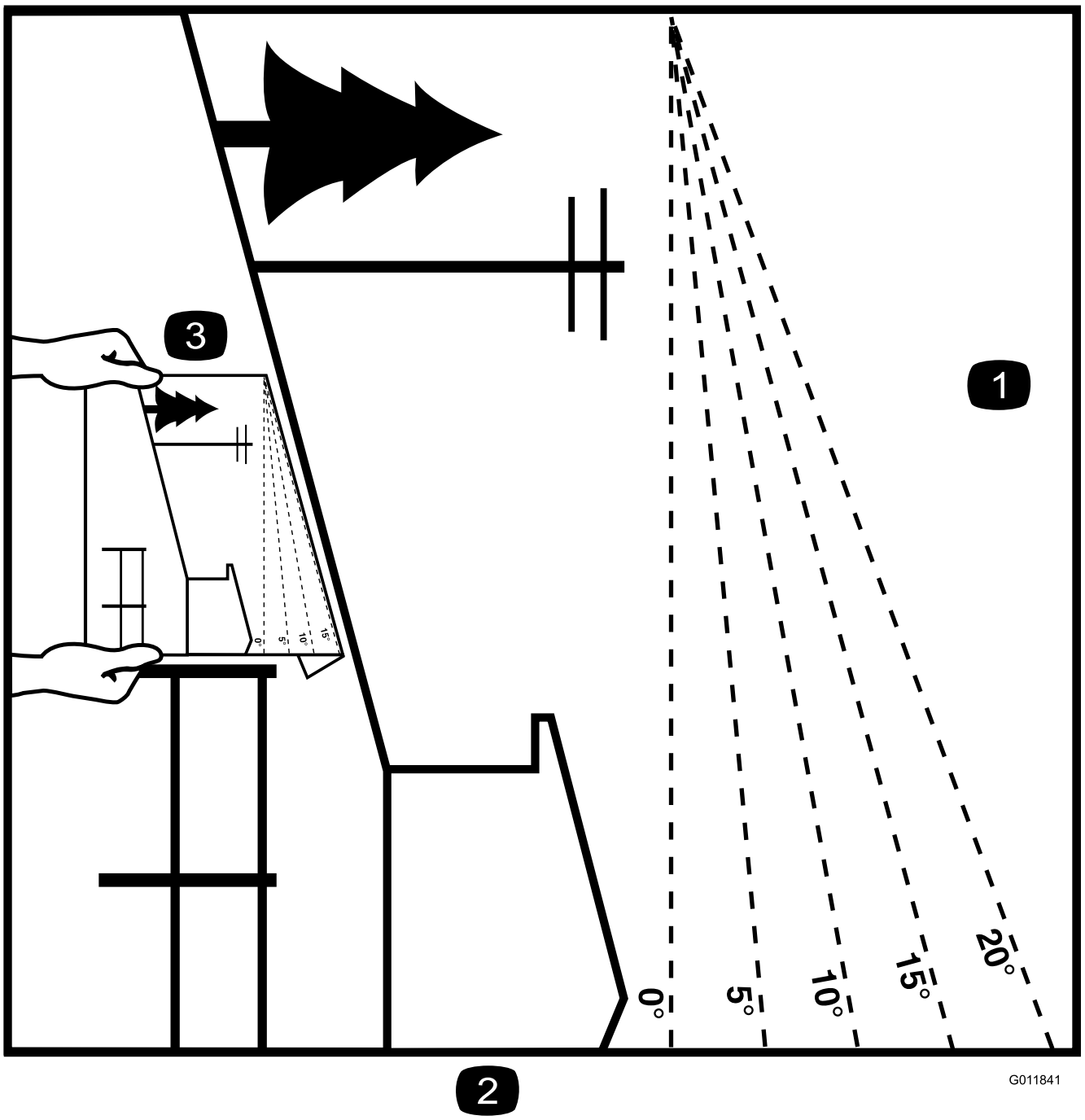

Figure 3

This page may be copied for personal use.

1. To determine the maximum slope you can safely operate the machine on, refer to the Stability Data section. Use the slope indicator to determine the degree of slope of hills before operating. **Do not operate this machine on a slope greater than that specified in the Stability Data section.** Fold along the appropriate line to match the recommended slope.
2. Align this edge with a vertical surface, a tree, building, fence pole, etc.
3. Example of how to compare slope with folded edge.

Safety and Instructional Decals

Safety decals and instructions are easily visible to the operator and are located near any area of potential danger. Replace any decal that is damaged or lost.

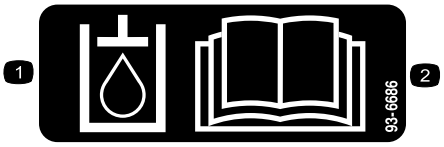

93-6686

1. Hydraulic oil
2. Read the *Operator's Manual*.



100-8821

1. Crushing hazard and cutting hazard of hand—stay a safe distance from the front of the traction unit when the loader arms are raised.

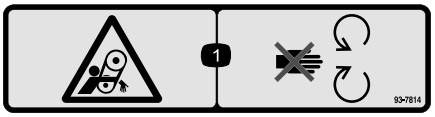

93-7814

1. Entanglement hazard, belt—stay away from moving parts.

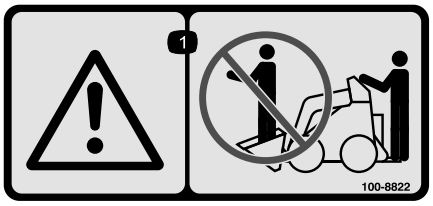

100-8822

1. Warning—do not carry passengers.

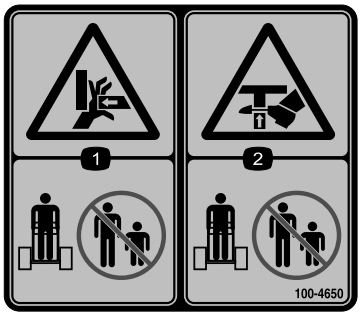

100-4650

1. Crushing hazard of hand—keep bystanders a safe distance from the machine.
2. Crushing hazard of foot—keep bystanders a safe distance from the machine.

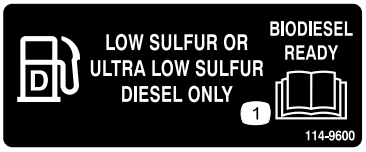

114-9600

1. Read the *Operator's Manual*.

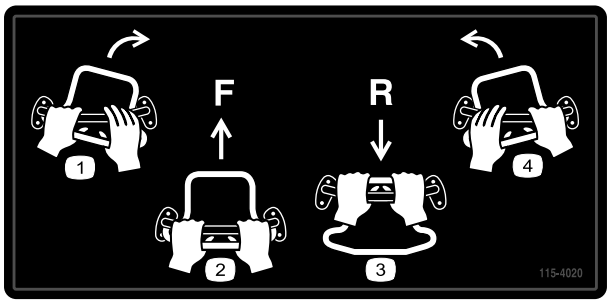

115-4020

1. Turn right
2. Forward
3. Reverse
4. Turn left

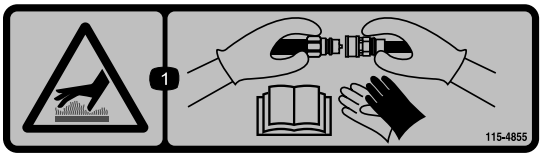

115-4855

1. Hot surface/burn hazard—wear protective gloves when handling the hydraulic couplers and read the *Operator's Manual* for information on handling hydraulic components.

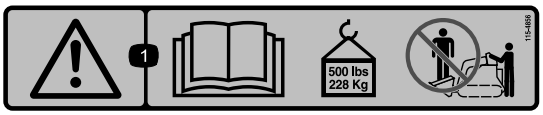

115-4856

1. Warning—read the *Operator's Manual*; maximum load rating of 500 lb (228 Kg); no riders.

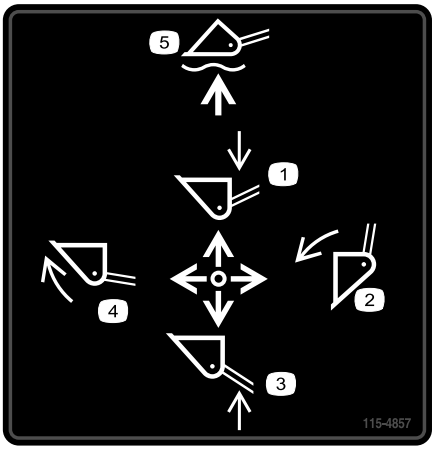

115-4857

1. Lower the loader arms.
2. Dump the bucket.
3. Raise the loader arms.
4. Curl the bucket.
5. Float the bucket on the ground.



115-4858

1. Crushing hazard of hands or feet—install the cylinder lock.



115-4859

1. Disengaged
2. Parking brake
3. Engaged

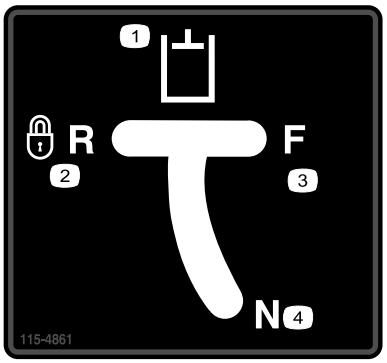

115-4861

1. Auxiliary hydraulics
2. Locked reverse (detent)
3. Forward
4. Neutral (off)

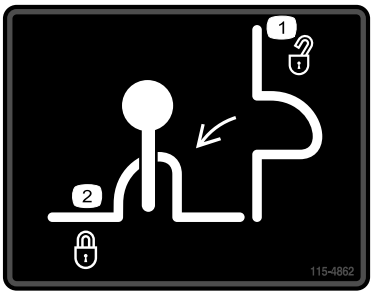

115-4862

1. Loader valve lock, unlocked
2. Loader valve lock, locked



106-6755

1. Engine coolant under pressure.
2. Explosion hazard—read the *Operator's Manual.*
3. Warning—do not touch the hot surface.
4. Warning—read the *Operator's Manual.*



93-9084

1. Lift point
2. Tie-down point



Battery Symbols

Some or all of these symbols are on your battery

1. Explosion hazard
2. No fire, open flame, or smoking.
3. Caustic liquid/chemical burn hazard
4. Wear eye protection
5. Read the *Operator's Manual.*
6. Keep bystanders a safe distance from the battery.
7. Wear eye protection; explosive gases can cause blindness and other injuries
8. Battery acid can cause blindness or severe burns.
9. Flush eyes immediately with water and get medical help fast.
10. Contains lead; do not discard.

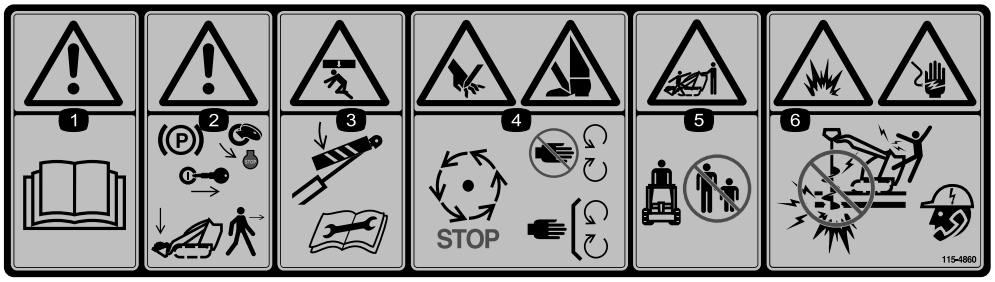

115-4860

1. Warning—read the *Operator's Manual.*
2. Warning—set the parking brake, stop the engine, remove the ignition key and lower the loader arms before leaving the machine.
3. Crushing hazard—install the cylinder lock and read the instructions before servicing or performing maintenance.
4. Cutting hazard of hands or feet—wait for all moving parts to stop; stay away from moving parts; keep all guards and shields in place.
5. Crushing/dismemberment hazard of bystanders—keep bystanders a safe distance from the machine.
6. Explosion and electric shock hazard—do not dig in areas with buried gas or electrical lines; contact local power organizations before digging.

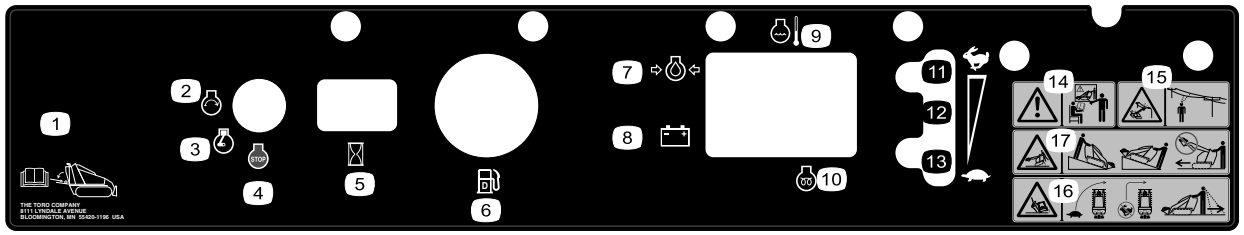

115-4864

1. *Operator's Manual* location
2. Engine—start
3. Engine—run
4. Engine—stop
5. Hour meter
6. Fuel gauge—diesel
7. Engine oil pressure
8. Battery
9. Engine temperature
10. Glow plug
11. Fast
12. Continuous variable setting (engine speed)
13. Slow
14. Warning— do not operate this machine unless you are trained.
15. Electric shock hazard, overhead power lines—stay away from overhead power lines.
16. Tipping hazard—slow the traction unit when turning, do not travel fast when turning, look behind and down when reversing.
17. Tipping hazard—move the traction unit with the heavy end up hill; do not travel with the loader arms raised.

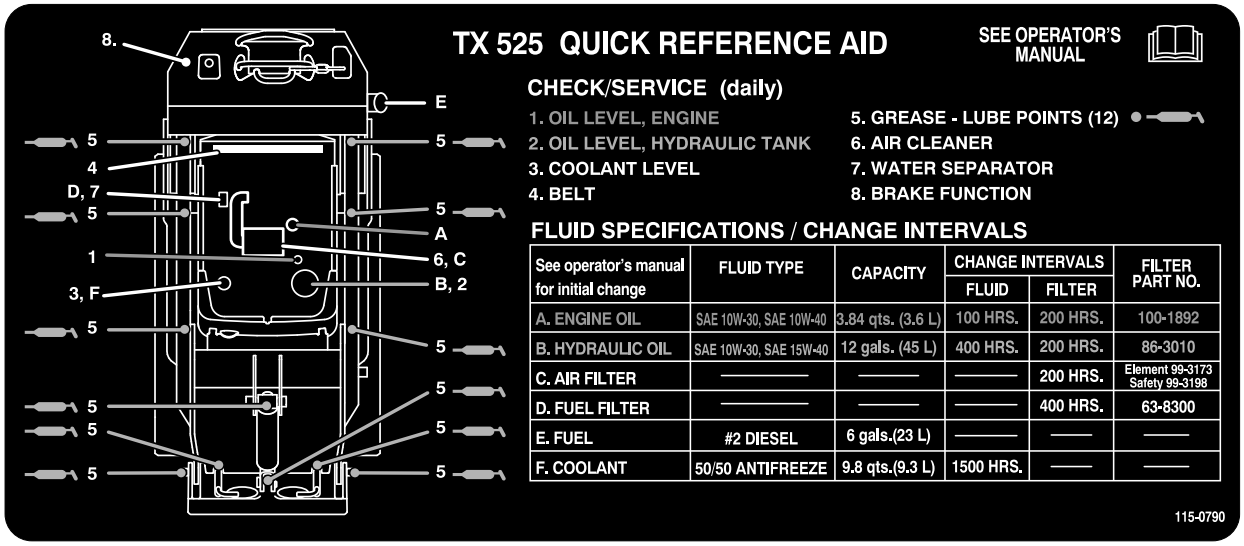

115-0790

Product Overview

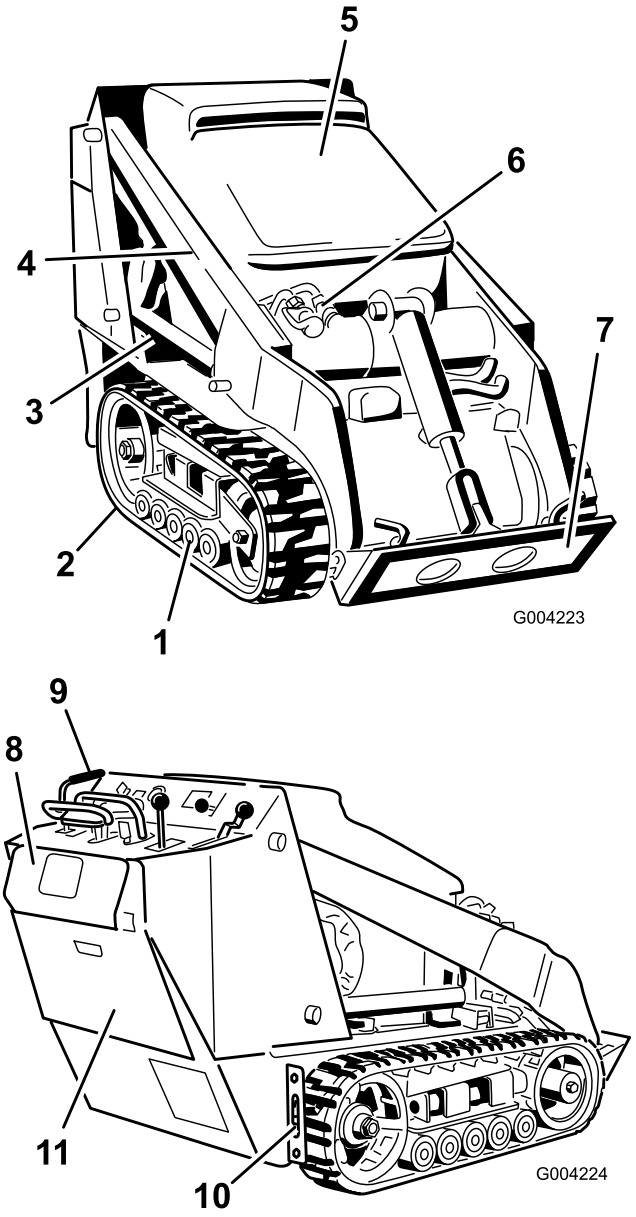

Figure 4

1. Road wheels
2. Track
3. Lift cylinder
4. Loader arms
5. Hood
6. Auxiliary hydraulic couplers
7. Mount plate
8. Reverse safety plate
9. Control panel
10. Tie-down/lift loop
11. Rear access cover

Controls

Become familiar with all the controls (Figure 5) before you start the engine and operate the traction unit.

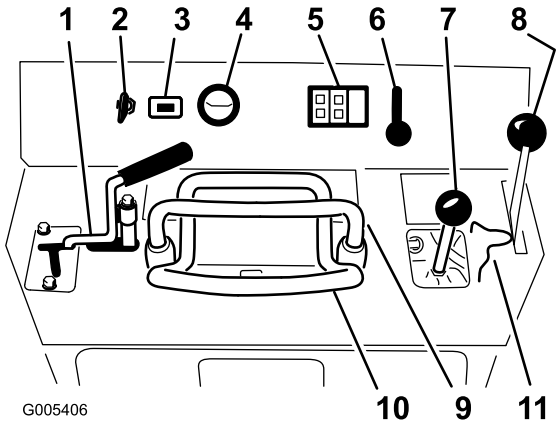

Figure 5

1. Auxiliary hydraulics lever
2. Key switch
3. Hour meter
4. Fuel gauge
5. Indicator lights and glow plug switch
6. Throttle lever
7. Loader arm/attachment tilt lever
8. Parking brake lever
9. Reference bar
10. Traction control
11. Loader valve lock

Key Switch

The key switch, used to start and stop the engine, has three positions: off, run, and start.

To start the engine, rotate the key to the start position. Release the key when engine starts and it will move automatically to the run position.

To stop the engine, rotate the key to the off position.

Throttle Lever

Move the control forward to increase the engine speed and rearward to decrease speed.

Reference Bar

When driving the traction unit, use the reference bar as a handle and a leverage point for controlling the traction control and the auxiliary hydraulics lever. To ensure smooth, controlled operation, do not take both hands off of the reference bar while operating the traction unit.

Traction Control

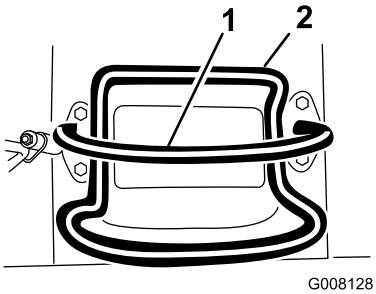

Figure 6

1. Reference bar (does not move to give you a reference point and a fixed handle to hold while operating the traction unit)
2. Traction control (moves to control the machine)

- To move forward, move the traction control forward (Figure 7).

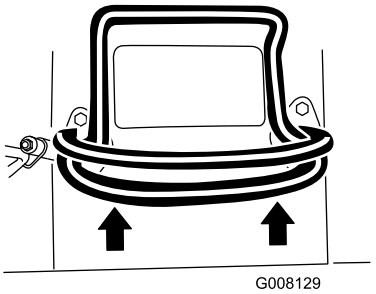

Figure 7

- To move rearward, move the traction control rearward (Figure 8). **When reversing, look behind for obstructions and keep your hands on the reference bar.**

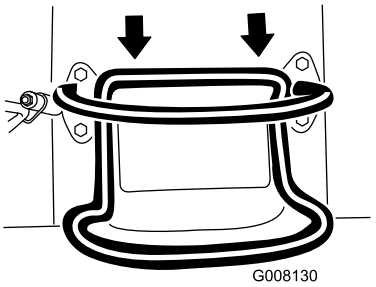

Figure 8

- To turn right, rotate the traction control clockwise (Figure 9).

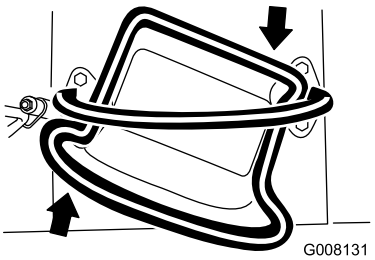

Figure 9

- To turn left, rotate the traction control counterclockwise (Figure 10).

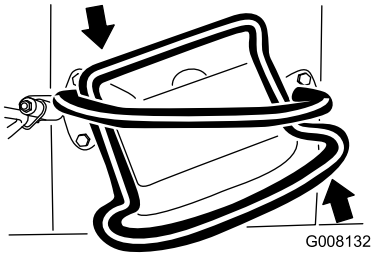

Figure 10

- To stop, release the traction control (Figure 6).

Note: The farther you move the traction control in any direction, the faster the machine will move in that direction.

Loader Arm/Attachment Tilt Lever

To tilt the attachment forward, slowly move the lever to the right (Figure 11).

To tilt the attachment rearward, slowly move the lever to the left (Figure 11).

To lower the loader arms, slowly move the lever forward (Figure 11).

To raise the loader arms, slowly move the lever rearward (Figure 11).

You can also push the lever fully forward into a detent position (Figure 11) to release the loader arms so that the attachment rests on the ground. This allows attachments such as the leveler and the hydraulic blade to follow the contours of the ground (i.e., float) when grading.

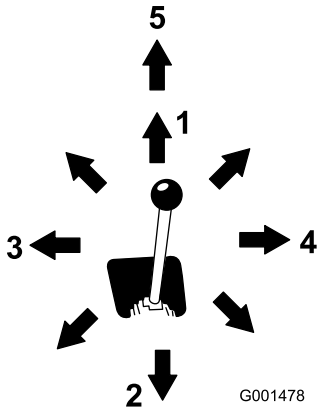

Figure 11

1. Lower the loader arms
2. Raise the loader arms
3. Tilt the attachment rearward
4. Tilt the attachment forward
5. Detent (Float) position

By moving the lever to an intermediate position (such as, forward and left), you can move the loader arms and tilt the attachment at the same time.

Loader Valve Lock

The loader valve lock secures the loader arm/attachment tilt lever so that you cannot push it forward. This helps to ensure that no one will accidentally lower the loader arms during maintenance. Secure the loader arms with the lock anytime you need to stop the machine with the loader arms raised.

To set the lock, lift up on it so it clears the hole in the control panel and swing it to the left in front of the loader arm lever, pushing it down into the locked position (Figure 12).

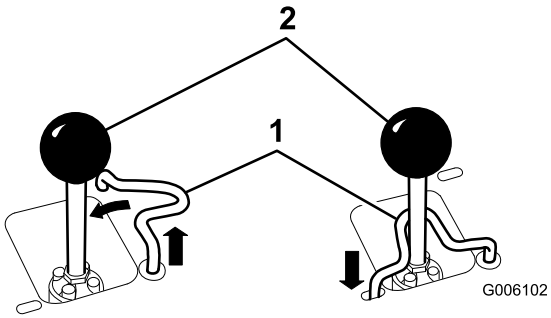

Figure 12

1. Loader valve lock
2. Loader arm/attachment tilt lever

Auxiliary Hydraulics Lever

To operate a hydraulic attachment in the forward direction, rotate the auxiliary hydraulics lever rearward and pull it down to the reference bar (Figure 13, number 1).

To operate a hydraulic attachment in reverse direction, rotate the hydraulics lever rearward, then move it left into the upper slot (Figure 13, number 2).

If you release the lever while in the forward position, the lever will automatically return to the neutral position (Figure 13, number 3). If it is in the reverse position, it will remain there until you pull it out of the slot.

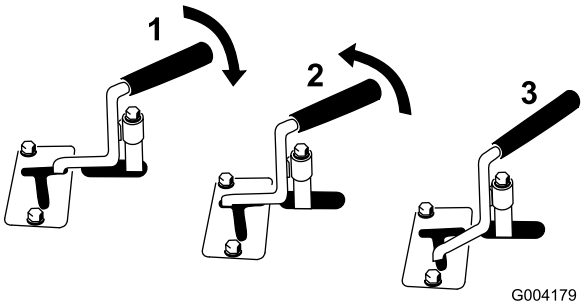

Figure 13

1. Forward flow hydraulics
2. Reverse flow hydraulics
3. Neutral

Parking Brake Lever

To set the parking brake, push the brake lever forward and to the left and then pull it rearward (Figure 14).

Note: The traction unit may roll slightly before the brakes engage in the drive sprocket.

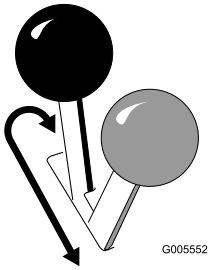

Figure 14

To release the brake, push the lever forward and then right, into the notch.

Fuel Gauge

This gauge measures the amount of fuel in the fuel tank.

Engine Oil Pressure Light

If the engine oil pressure gets too low, this light illuminates and an audible alarm sounds. If this happens, stop the engine immediately and check the oil. If low, add oil and/or look for possible leaks.

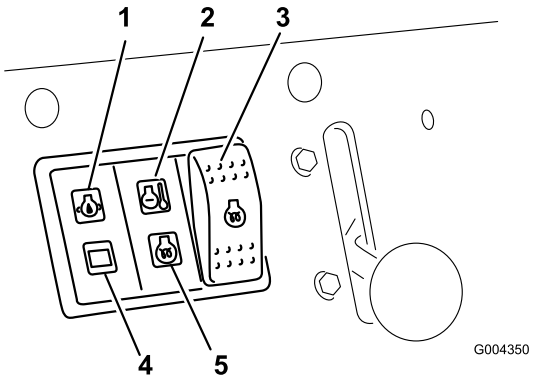

Figure 15

1. Engine oil pressure light
2. Engine coolant temperature light
3. Glow plug switch
4. Battery charge indicator light
5. Glow plug light

Battery Charge Indicator Light

If the battery charge becomes too low, this light illuminates and an audible alarm sounds. If this happens, stop the engine and charge or replace the battery. Check the tension of the alternator belt; refer to your *Engine Operator's Manual.*

Engine Coolant Temperature Light

If the engine coolant gets too hot, this light illuminates and an audible alarm sounds. If this happens, stop the engine and allow the traction unit to cool. Check the coolant level when the engine has fully cooled.

Glow Plug Light

Illuminates while the glow plugs are charged and warming the engine.

Glow Plug Switch

Press and hold this switch for 10 seconds to activate the glow plugs before starting the engine.

Hour Meter

The hour meter displays the number of hours of operation that have been logged on the traction unit.

Specifications

Note: Specifications and design are subject to change without notice.

Model 22323 Specifications

Width	34 inches (86 cm)
Length	71 inches (180 cm)
Height	46 inches (117 cm)
Weight	1904 lb (864 Kg)
Operating capacity	553 lb (251 Kg)
Tipping capacity	1580 lb (717 Kg)
Wheelbase	31.2 inches (79 cm)
Dump height (with narrow bucket)	47 inches (119 cm)
Reach—fully raised (with narrow bucket)	22 inches (55 cm)
Height to hinge pin (narrow bucket in highest position)	66 inches (168 cm)

Model 22324 Specifications

Width	41 inches (104 cm)
Length	71 inches (180 cm)
Height	43 inches (109 cm)
Weight	2013 lb (913 Kg)
Operating capacity	553 lb (251 Kg)
Tipping capacity	1580 lb (717 Kg)
Wheelbase	31.2 inches (79 cm)
Dump height (with narrow bucket)	47 inches (119 cm)
Reach—fully raised (with narrow bucket)	22 inches (55 cm)
Height to hinge pin (narrow bucket in highest position)	66 inches (168 cm)

Attachments/Accessories

A selection of Toro approved attachments and accessories are available for use with the machine to enhance and expand its capabilities. Contact your Authorized Service Dealer or Distributor or go to www.Toro.com for a list of all approved attachments and accessories.

Important: Use only Toro approved attachments. Other attachments may create an unsafe operating environment or damage the traction unit.

Operation

Note: Determine the left and right sides of the machine from the normal operating position.

Important: Before operating, check the fuel and oil level, and remove debris from the traction unit. Also, ensure that the area is clear of people and debris. You should also know and have marked the locations of all utility lines.

Adding Fuel

Use only clean, fresh diesel fuel or biodiesel fuels with low (<500 ppm) or ultra low (<15 ppm) sulfur content. The minimum cetane rating should be 40. Purchase fuel in quantities that can be used within 180 days to ensure fuel freshness.

Fuel tank capacity: 5.85 US gallons (22 l)

Use summer grade diesel fuel (No. 2-D) at temperatures above 20° F (-7° C) and winter grade (No. 1-D or No. 1-D/2-D blend) below that temperature. Use of winter grade fuel at lower temperatures provides lower flash point and cold flow characteristics which will ease starting and reduce fuel filter plugging.

Use of summer grade fuel above 20° F (-7° C) will contribute toward longer fuel pump life and increased power compared to winter grade fuel.

Important: Do not use kerosene or gasoline instead of diesel fuel. Failure to observe this caution will damage the engine.

⚠ WARNING

Fuel is harmful or fatal if swallowed. Long-term exposure to vapors can cause serious injury and illness.

- **Avoid prolonged breathing of vapors.**
- **Keep face away from nozzle and fuel tank or conditioner opening.**
- **Keep fuel away from eyes and skin.**

Biodiesel Ready

This machine can also use a biodiesel blended fuel of up to B20 (20% biodiesel, 80% petrodiesel). The petrodiesel portion should be low or ultra low sulfur. Observe the following precautions:

- The biodiesel portion of the fuel must meet specification ASTM D6751 or EN14214.
- The blended fuel composition should meet ASTM D975 or EN590.
- Painted surfaces may be damaged by biodiesel blends.
- Use B5 (biodiesel content of 5%) or lesser blends in cold weather.
- Monitor seals, hoses, gaskets in contact with fuel as they may be degraded over time.
- Fuel filter plugging may be expected for a time after converting to biodiesel blendsd.
- Contact your distributor if you wish for more information on biodiesel.

Filling the Fuel Tank

⚠ DANGER

In certain conditions, fuel is extremely flammable and highly explosive. A fire or explosion from fuel can burn you and others and can damage property.

- **Fill the fuel tank outdoors, in an open area, when the engine is cold. Wipe up any fuel that spills.**
- **Never fill the fuel tank inside an enclosed trailer.**
- **Never smoke when handling fuel, and stay away from an open flame or where fuel fumes may be ignited by a spark.**
- **Store fuel in an approved container and keep it out of the reach of children. Never buy more than a 30-day supply of fuel.**
- **Do not operate without entire exhaust system in place and in proper working condition.**

⚠ DANGER

In certain conditions during fueling, static electricity can be released causing a spark which can ignite the fuel vapors. A fire or explosion from fuel can burn you and others and can damage property.

- **Always place fuel containers on the ground away from your vehicle before filling.**
- **Do not fill fuel containers inside a vehicle or on a truck or trailer bed because interior carpets or plastic truck bed liners may insulate the container and slow the loss of any static charge.**
- **When practical, remove equipment from the truck or trailer and refuel the equipment with its wheels on the ground.**
- **If this is not possible, then refuel such equipment on a truck or trailer from a portable container, rather than from a fuel dispenser nozzle.**
- **If a fuel dispenser nozzle must be used, keep the nozzle in contact with the rim of the fuel tank or container opening at all times until fueling is complete.**

1. Remove the fuel tank cap (Figure 16).

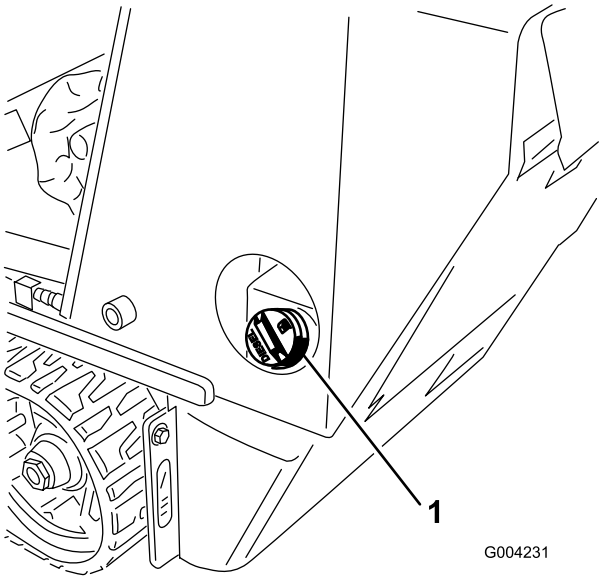

Figure 16

1. Fuel tank cap

2. Fill the tank to about one inch below the top of the tank, not the filler neck, with diesel fuel.
3. Install the fuel tank cap.

Checking the Engine Oil Level

Service Interval: Before each use or daily

1. Park the traction unit on a level surface, lower the loader arms, and stop the engine.
2. Remove the key and allow the engine to cool.
3. Open the hood.
4. Clean around the oil dipstick (Figure 17).

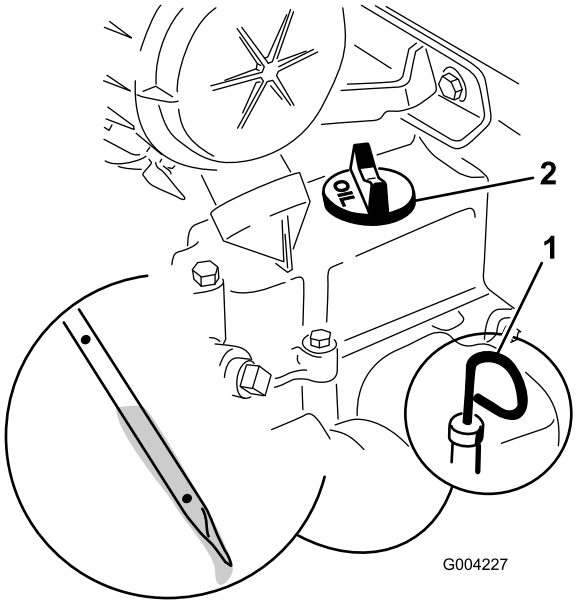

Figure 17

1. Oil dipstick
2. Oil filler cap

5. Pull out the dipstick and wipe the metal end clean (Figure 17).
6. Slide the dipstick fully into the dipstick tube (Figure 17).
7. Pull the dipstick out and look at the metal end.
8. If the oil level is low (below the bottom hole), clean around the oil filler cap and remove the cap (Figure 17).
9. Slowly pour only enough oil into the valve cover to raise the level to the top hole on the dipstick.

   Important: Do not overfill the crankcase with oil because the engine may be damaged.

10. Replace the filler cap and dipstick.
11. Close the hood.

Checking the Hydraulic Fluid Level

Service Interval: Every 25 hours

Hydraulic Tank Capacity: 12 US gallons (45.4 l)

Use 10W-30 or 15W-40 detergent, diesel engine oil (API service CH-4 or higher).

1. Remove the attachment, if one is installed; refer to Removing an Attachment.
2. Park the traction unit on a level surface, lower the loader arms, and fully retract the tilt cylinder.
3. Stop the engine, remove the key, and allow the engine to cool.
4. Open the hood.
5. Clean the area around the filler neck of the hydraulic tank (Figure 18).

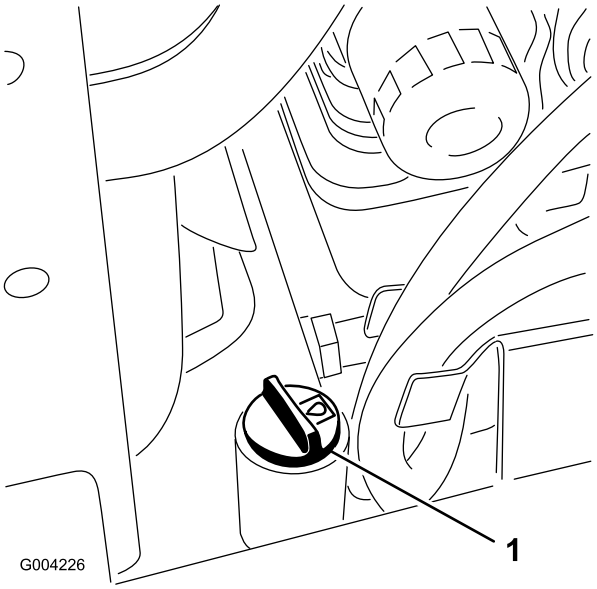

Figure 18

1. Hydraulic filler neck cap

6. Remove the cap from the filler neck and check the fluid level on the dipstick (Figure 19).

   The fluid level should be between the marks on the dipstick.

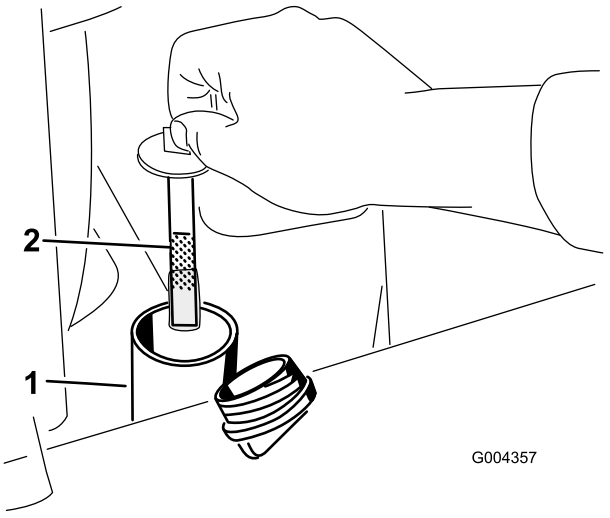

Figure 19

1. Filler neck
2. Dipstick

7. If the level is low, add enough fluid to raise it to the proper level.
8. Install the cap on the filler neck.
9. Close the hood.

Checking, Adding, and Bleeding the Engine Coolant

Service Interval: Before each use or daily

Clean debris off of the screen, oil cooler, and front of the radiator daily and more often if conditions are extremely dusty and dirty

The cooling system is filled with a 50/50 solution of water and permanent ethylene glycol antifreeze. Check the level of coolant in the expansion tank at the beginning of each day before starting the engine.

⚠ DANGER

If the engine has been running, the pressurized, hot coolant can escape and cause severe burns.

- **Do not remove the radiator cap when the engine is hot. Always allow the engine to cool at least 15 minutes or until the radiator cap is cool enough to touch without burning your hand before removing the radiator cap.**
- **Do not touch radiator and surrounding parts that are hot.**
- **Use a rag when opening the radiator cap, and open the cap slowly to allow steam to escape.**

⚠ DANGER

Rotating shaft and fan can cause personal injury.

- **Do not operate the machine without the covers in place.**
- **Keep fingers, hands and clothing clear of rotating fan and drive shaft.**
- **Shut off the egine and remove the ignition key before performing maintenance.**

1. Check the level of coolant in the expansion tank (Figure 20).

   The coolant level should be at or above the mark on the side of the tank.

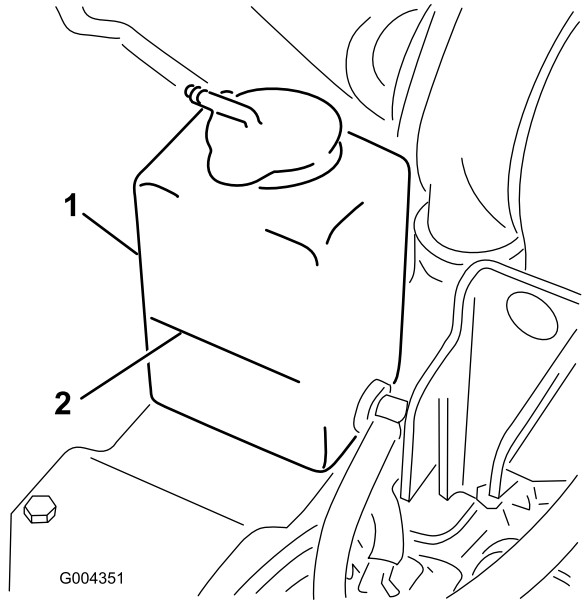

Figure 20

1. Expansion tank
2. Full mark

2. If the coolant level is low, complete the following procedure:

   A. Remove the coolant fill cap (Figure 21).

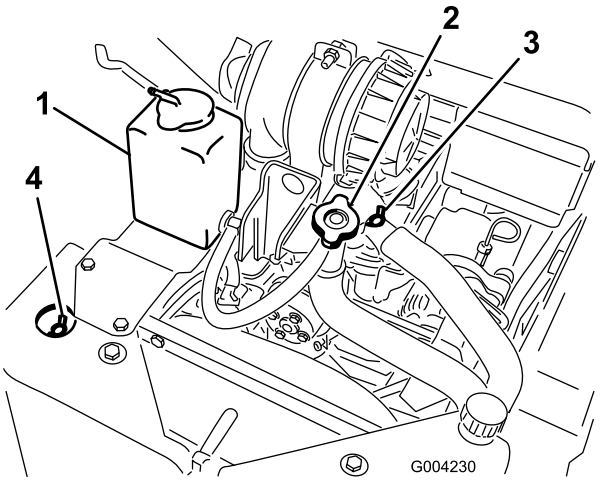

Figure 21

1. Expansion tank
2. Coolant fill cap and filler neck
3. Top coolant bleed valve
4. Front coolant bleed valve

   B. Open the front and top coolant bleed valves (Figure 21).

   C. Pour coolant into the coolant filler neck until the coolant begins to come out of the front coolant bleed valve (Figure 21).

   D. Close the front coolant bleed valve (Figure 21).

   E. Pour coolant into the coolant filler neck until the coolant begins to come out of the top coolant bleed valve (Figure 21).

F. Close the top coolant bleed valve (Figure 21).

G. Pour coolant into the coolant filler neck until the coolant level comes into the filler neck (Figure 21).

H. Install the coolant fill cap (Figure 21).

I. Add coolant into the expansion tank until it reaches the Full line on the side of the tank (Figure 21).

3. Install the expansion tank cap.

Bleeding the Fuel System

You must bleed the fuel system before starting the engine if any of the following situations have occurred:

- Initial start up of a new machine.
- Engine has ceased running due to lack of fuel.
- Maintenance has been performed upon fuel system components (e.g., filter replaced).

⚠ DANGER

Under certain conditions, diesel fuel and fuel vapors are highly flammable and explosive. A fire or explosion from fuel can burn you and others and can cause property damage.

- **Use a funnel and fill the fuel tank outdoors, in an open area, when the engine is off and is cold. Wipe up any fuel that spills.**
- **Do not fill the fuel tank completely full. Add fuel to the fuel tank until the level is 1/4 to 1/2 in. (6 to 13 mm) below the bottom of the filler neck. This empty space in the tank allows the fuel to expand.**
- **Never smoke when handling fuel, and stay away from an open flame or where fuel fumes may be ignited by a spark.**
- **Store fuel in a clean, safety-approved container and keep the cap in place.**

1. Ensure that the fuel tank is at least half full.
2. Open the hood.
3. Open the air bleed screw on the fuel injection pump (Figure 22).

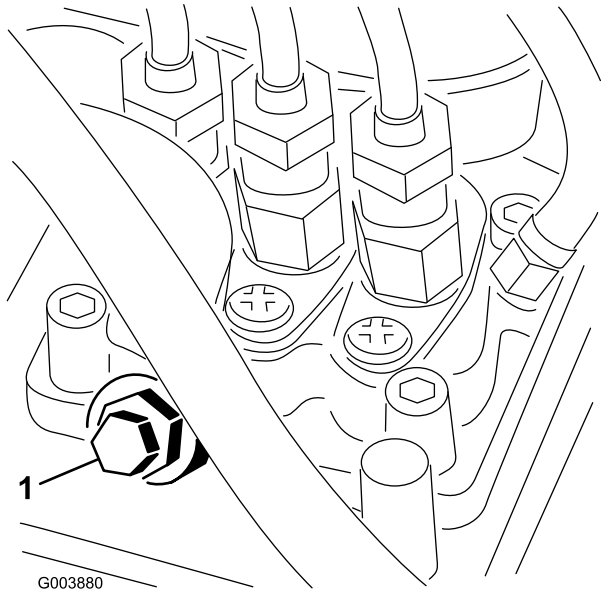

Figure 22

1. Fuel injection pump bleed screw

4. Turn the key in the ignition switch to the On position. The electric fuel pump will begin operation, thereby forcing air out around the air bleed screw. Leave the key in the On position until a solid stream of fuel flows out around the screw.
5. Tighten the screw and turn the key to the Off position.

Note: Normally, the engine should start after the above bleeding procedures are followed. However, if engine does not start, air may be trapped between injection pump and injectors; contact your Authorized Service Dealer.

Starting and Stopping the Engine

Starting the Engine

1. Ensure that the auxiliary hydraulics lever is in neutral.
2. Move the throttle lever midway between slow (turtle) and fast (rabbit) positions.
3. Turn the ignition key to the Run position.
4. Press the glow plug switch and hold it for 10 seconds.
5. Turn the ignition key to the Start position. When the engines starts, release the key.

Important: Do not engage the starter for more than 10 seconds at a time. If the engine fails to start, allow a 30 second cool-down period

between attempts. Failure to follow these instructions can burn out the starter motor.

6. Move the throttle lever to desired setting.

   Important: If the engine is run at high speeds when the hydraulic system is cold (i.e., when the ambient air temperature is near freezing or lower), hydraulic system damage could occur. When starting the engine in cold conditions, allow the engine to run in the middle throttle position for 2 to 5 minutes before moving the throttle to fast (rabbit).

   Note: If outdoor temperature is below freezing, store the traction unit in a garage to keep it warmer and aid in starting.

Stopping the Engine

1. Move the throttle lever to the slow (turtle) position.
2. Lower the loader arms to the ground.
3. Turn the ignition key off.

   Note: If the engine has been working hard or is hot, let it idle for a minute before turning the ignition key off. This helps cool the engine before it is stopped. In an emergency, the engine may be stopped immediately.

Stopping the Traction Unit

To stop the traction unit, release the traction control, move the throttle lever to slow (turtle), lower loader arms to the ground, and stop the engine. Set the parking brake and remove the key.

⚠ CAUTION

A child or untrained bystander could attempt to operate the traction unit and be injured.

Remove the key from the switch when leaving the traction unit, even if just for a few seconds.

Moving a Non-functioning Traction Unit

Important: Do not tow or pull the traction unit without first opening the tow valves, or the hydraulic system will be damaged.

1. Stop the engine.
2. Open the rear access cover.
3. Using a wrench, turn the tow valves on the hydraulic pumps twice counter-clockwise (Figure 23).

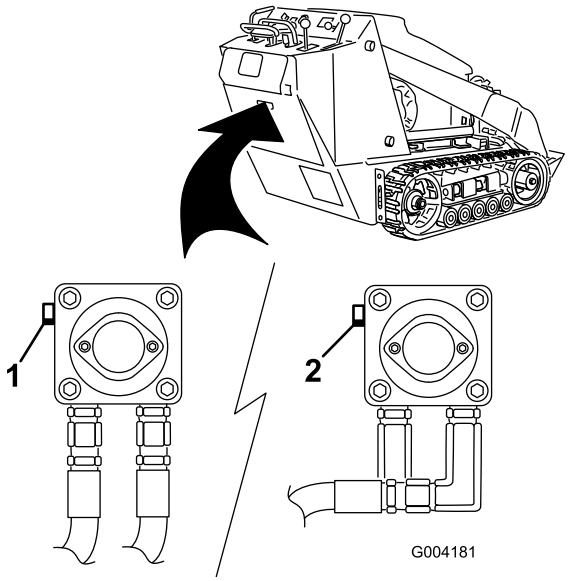

Figure 23

1. Left tow valve (right track) 2. Right tow valve (left track)

4. Tow the traction unit as required.
5. When the traction unit has been repaired, close the tow valves before operating it.

Using the Cylinder Lock

⚠ WARNING

The loader arms may lower when in the raised position crushing anyone under them.

Install the cylinder lock before performing maintenance that requires raised loader arms.

Installing the Cylinder Lock

1. Remove the attachment.
2. Raise the loader arms to the fully raised position.
3. Stop the engine.
4. Remove the lynch pin securing the cylinder lock to the loader arm (Figure 24).

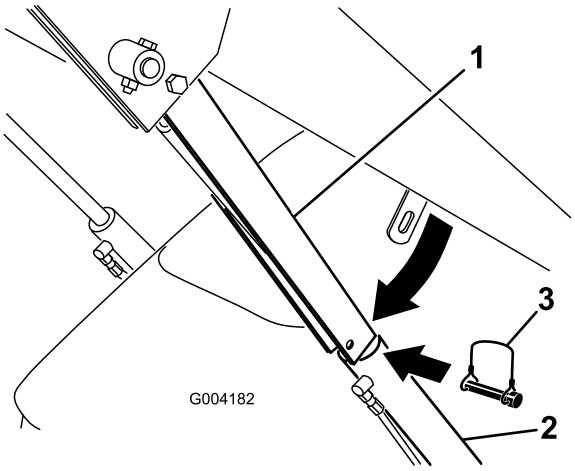

Figure 24

1. Cylinder lock
2. Lift cylinder
3. Lynch pin

5. Lower the cylinder lock over the cylinder rod and secure it with the lynch pin (Figure 24).
6. **Slowly** lower the loader arms until cylinder lock contacts the cylinder body and rod end.

Removing/Storing the Cylinder Lock

Important: Ensure that the cylinder lock is removed from the rod and fully secured in the storage position before operating the traction unit.

1. Start the engine.
2. Raise the loader arms to the fully raised position.
3. Stop the engine.
4. Remove the lynch pin securing the cylinder lock.
5. Rotate the cylinder lock up to the loader arm and secure it with the lynch pin.
6. Lower the loader arms.

Using Attachments

Important: If you are using an attachment with a serial number of 200999999 or earlier, the manual for the attachment may contain information specific to the use of the attachment with other traction unitsmodels, such as settings for the flow divider control and speed selector lever and the use of a counterweight on the traction unit. These systems are built into the TX, and you should ignore any references to them.

Installing an Attachment

Important: Use only Toro-approved attachments. Attachments can change the stability and the operating characteristics of the traction unit. The warranty of the traction unit may be voided if used with unapproved attachments.

Important: Before installing the attachment, ensure that the mount plates are free of any dirt or debris and that the pins rotate freely. If the pins do not rotate freely, grease them.

1. Position the attachment on a level surface with enough space behind it to accommodate the traction unit.
2. Start the engine.
3. Tilt the attachment mount plate forward.
4. Position mount plate into the upper lip of the attachment receiver plate (Figure 25).

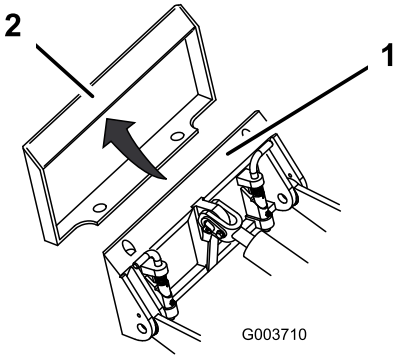

Figure 25

1. Mount plate
2. Receiver plate

5. Raise the loader arms while tilting back the mount plate at the same time.

   Important: The attachment should be raised enough to clear the ground, and the mount plate should be tilted all the way back.
6. Stop the engine.
7. Engage the quick attach pins, ensuring that they are fully seated in the mount plate (Figure 26).

   Important: If the pins do not rotate to the engaged position, the mount plate is not fully aligned with the holes in the attachment receiver plate. Check the receiver plate and clean it if necessary.

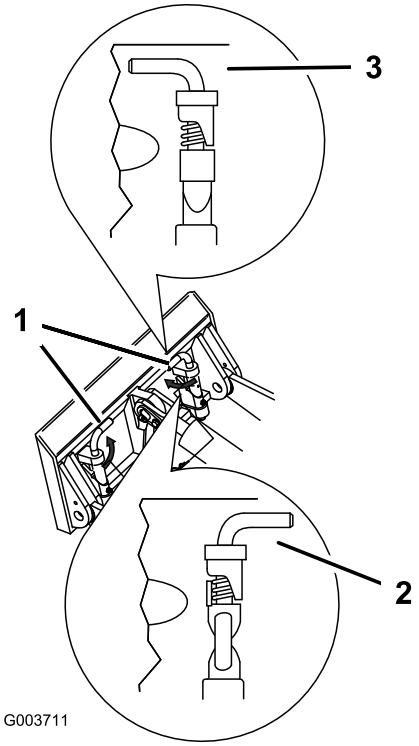

Figure 26

1. Quick attach pins (shown in engaged position)
2. Disengaged position
3. Engaged position

⚠ WARNING

If you do not fully seat the quick attach pins through the attachment mount plate, the attachment could fall off of the traction unit, crushing you or bystanders.

Ensure that your quick attach pins are fully seated in the attachment mount plate.

Connecting the Hydraulic Hoses

If the attachment requires hydraulics for operation, connect the hydraulic hoses as follows:

1. Stop the engine.
2. Move the auxiliary hydraulics lever forward, backward, and back to neutral to relieve pressure at the hydraulic couplers.
3. Move the auxiliary hydraulics lever into the reverse position.
4. Remove the protective covers from the hydraulic couplers on the traction unit.
5. Ensure that all foreign matter is cleaned from the hydraulic connectors.
6. Push the attachment male connector into the female connector on the traction unit.

Note: When you connect the attachment male connector first, you will relieve any pressure built up in the attachment.

⚠ WARNING

Hydraulic fluid escaping under pressure can penetrate skin and cause injury. Fluid injected into the skin must be surgically removed within a few hours by a doctor familiar with this form of injury or gangrene may result.

- **Keep your body and hands away from pin hole leaks or nozzles that eject high pressure hydraulic fluid.**
- **Use cardboard or paper to find hydraulic leaks, never use your hands.**

⚠ CAUTION

Hydraulic couplers, hydraulic lines/valves, and hydraulic fluid may be hot. If you contact hot components you may be burned.

- **Wear gloves when operating the hydraulic couplers.**
- **Allow the traction unit to cool before touching hydraulic components.**
- **Do not touch hydraulic fluid spills.**

7. Push the attachment female connector into the male connector on the traction unit.
8. Confirm that the connection is secure by pulling on the hoses.
9. Move the auxiliary hydraulics lever to neutral.

Removing an Attachment

1. Lower the attachment to the ground.
2. Stop the engine.
3. Disengage the quick attach pins by turning them to the outside.
4. If the attachment uses hydraulics, move the auxiliary hydraulics lever forward, backward, and back to neutral to relieve pressure at the hydraulic couplers.
5. If the attachment uses hydraulics, slide the collar back on the hydraulic couplers and disconnect them.

   Important: Connect the attachment hoses together to prevent hydraulic system contamination during storage.
6. Install the protective covers onto the hydraulic couplers on the traction unit.
7. Start the engine, tilt the mount plate forward, and back the traction unit away from the attachment.

Securing the Traction Unit for Transport

When transporting the traction unit on a trailer, always use the following procedure:

Important: Do not operate or drive the traction unit on roadways.

1. Lower the loader arms.
2. Stop the engine.
3. Secure the traction unit to the trailer with chains or straps using the tie-down/lift loops (Figure 4) to secure the rear of the traction unit and the loader arms/mount plate to secure the front of the traction unit.

Lifting the Traction Unit

You can lift the traction unit using the tie-down/lift loops as lift points (Figure 4).

Maintenance

Note: Determine the left and right sides of the machine from the normal operating position.

Recommended Maintenance Schedule(s)

Maintenance Service Interval	Maintenance Procedure
After the first 8 hours	• Replace the hydraulic filter.
After the first 50 hours	• Change the engine oil and filter. • Check and adjust the track tension.
Before each use or daily	• Check the engine oil level. • Check the cooling system. • Grease the traction unit. (Grease immediately after every washing.) • Check the air filter service indicator. • Drain water and other contaminants from the fuel filter/water separator. • Clean the tracks. • Check the tracks for excessive wear (If the tracks are worn, replace them.) • Clean the radiator. • Remove debris from the traction unit. • Check for loose fasteners.
Every 25 hours	• Check the hydraulic fluid level. • Remove air cleaner cover, clean out debris, and check the air filter service indicator.
Every 100 hours	• Change the engine oil. • Check the battery electrolyte level (replacement battery only). • Check the battery cable connections. • Check and adjust the track tension. • Check the cooling system hoses. • Check the alternator/fan belt tension (refer to the Engine Operator's Manual for instructions). • Check the hydraulic lines for leaks, loose fittings, kinked lines, loose mounting supports, wear, weather, and chemical deterioration. • Check for dirt build-up in the chassis.
Every 200 hours	• Change the oil filter. • Replace the hydraulic filter.
Every 250 hours	• Check and grease the road wheels.
Every 400 hours	• Check the fuel lines and connections for deterioration, damage, or loose connections. • Replace the fuel filter canister and in-line filter. • Change the hydraulic fluid.
Every 500 hours	• Replace the alternator/fan belt (refer to the Engine Operator's Manual for instructions).
Every 600 hours	• Replace the safety air filter.
Every 1,500 hours	• Replace all moving hydraulic hoses.
Yearly	• Change the engine coolant (Authorized Service Dealer only). • Check the condition of the hydraulic pump belt.
Yearly or before storage	• Check and adjust the track tension. • Touch up chipped paint
Every 2 years	• Drain and clean the fuel tank (Authorized Service Dealer only).

Important: **Refer to your *Engine Operator's Manual* for additional maintenance procedures.**

⚠ CAUTION

If you leave the key in the ignition switch, someone could accidently start the engine and seriously injure you or other bystanders.

Remove the key from the ignition before you do any maintenance.

Premaintenance Procedures

Before opening any of the covers, stop the engine and remove the key. Allow the engine to cool before opening any covers

Opening the Hood

1. Loosen the hood locking screw (Figure 27)

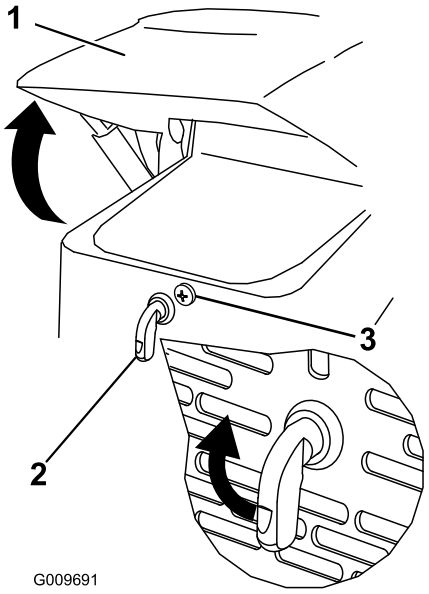

Figure 27

1. Hood
2. Lever hood latch
3. Hood locking screw

2. Turn the hood latch clockwise (Figure 27).
3. Swing the hood up (Figure 27).

Closing the Hood

1. Lift up on the tab securing the prop-rod (Figure 28)

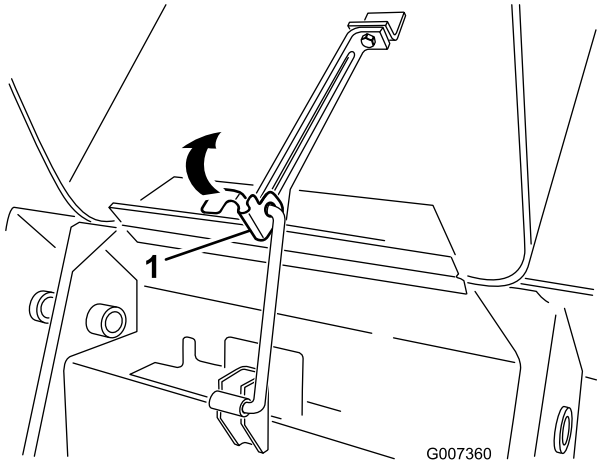

Figure 28

1. Prop-rod tab

2. Lower the hood and secure it by pushing down on the front of the hood until it locks in place.
3. Tighten the hood locking screw to secure the latch (Figure 27).

Opening the Rear Access Cover

1. Unscrew the 2 hand knobs securing the rear access cover to the machine (Figure 29).

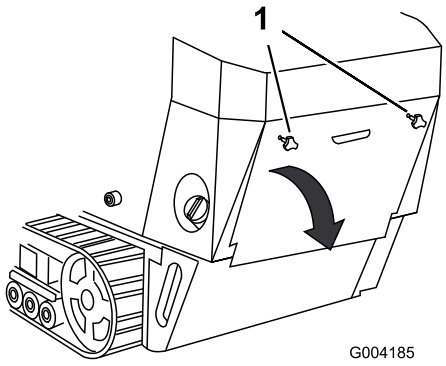

Figure 29

1. Hand knob

2. Tilt the rear access cover down and remove to access the internal components (Figure 29).

Closing the Rear Access Cover

1. Move the rear access cover in place over the back of the traction unit making sure the tabs line up in the slots.
2. Push the access cover forward, lining up the hand knob screws with the threaded holes in the machine.
3. Screw the hand knobs tight to secure the rear access cover in place.

Removing the Side Screens

1. Open the hood.
2. Slide the side screens (Figure 30) up and out of the slots in the front screen and frame.

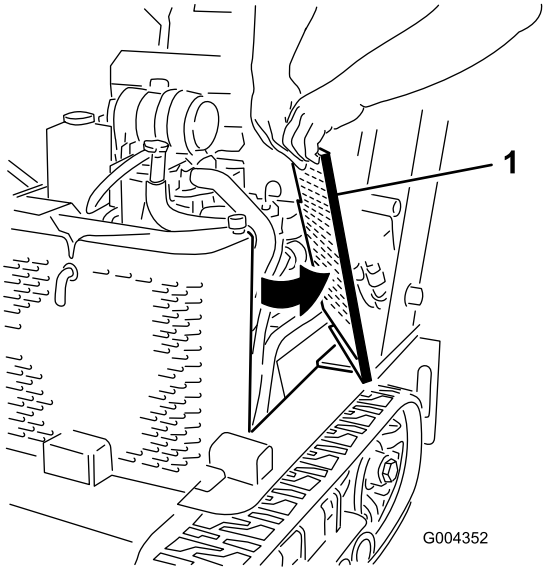

Figure 30

1. Side screen

Installing the Side Screens

Slide the side screens into place in the slots in the front screen and frame.

Lubrication

Greasing the Traction Unit

Service Interval: Before each use or daily (Grease immediately after every washing.)

Grease Type: General-purpose grease.

1. Lower the loader arms and stop the engine. Remove the key.
2. Clean the grease fittings with a rag.
3. Connect a grease gun to each fitting (Figure 31 and Figure 32).

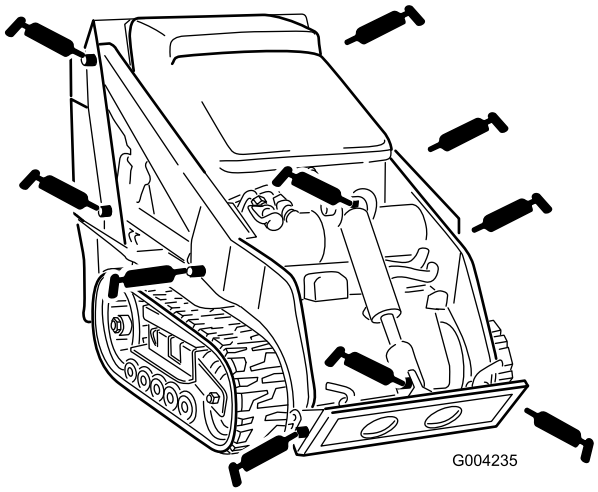

Figure 31

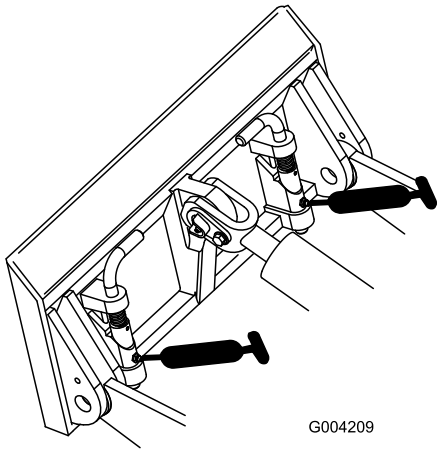

Figure 32

4. Pump grease into the fittings until grease begins to ooze out of the bearings (approximately 3 pumps).
5. Wipe up any excess grease.

Engine Maintenance

Servicing the Air Cleaner

Service Interval: Before each use or daily—Check the air filter service indicator.

Every 25 hours—Remove air cleaner cover, clean out debris, and check the air filter service indicator.

Every 600 hours—Replace the safety air filter.

Servicing the Air Cleaner Cover and Body

Important: Service the air cleaner filter only when the service indicator shows red (Figure 33). Changing the air filter before it is necessary only increases the chance of dirt entering the engine when the filter is removed.

1. Lower the loader arms, stop the engine, and remove the key.
2. Open the hood.
3. Check the air cleaner body for damage which could cause an air leak.. Check the whole intake system for leaks, damage, or loose hose clamps. Replace of repair and damaged components.
4. Release the latches on the air cleaner and pull the air cleaner cover off of the air cleaner body (Figure 33).

Important: Do not remove the air filters.

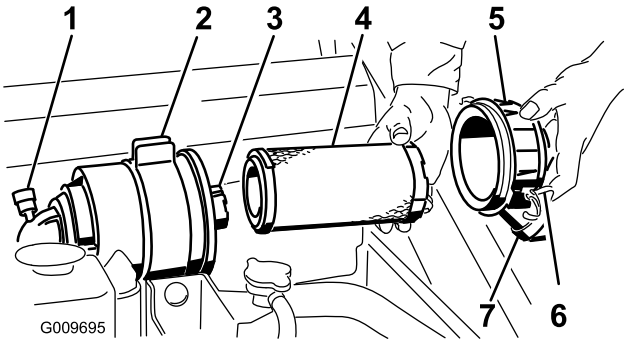

Figure 33

1. Air filter service indicator.
2. Air filter body
3. Safety filter
4. Primary filter
5. Air cleaner cover
6. Latches
7. Dust cap

5. Squeeze the dust cap sides to open it and knock the dust out.
6. Clean the inside of the air cleaner cover with compressed air.
7. Check the air filter service indicator.

- If the service indicator is clear, clean any debris from cover and install cover.

  Ensure that the cover is seated correctly and seals with the air cleaner body.

- If the service indicator is red, replace the air filter as described in Replacing the Filters.

Replacing the Filters

1. Gently slide the primary filter out of the air cleaner body (Figure 33). Avoid knocking the filter into the side of the body.

   Important: Do not attempt to clean the primary filter.

2. Remove the safety filter only if you intend to replace it.

   Important: Never attempt to clean the safety filter. If the safety filter is dirty, then the primary filter is damaged and you should replace both filters.

3. Inspect the new filter(s) for damage by looking into the filter while shining a bright light on the outside of the filter. Holes in the filter will appear as bright spots. Inspect the element for tears, an oily film, or damage to the rubber seal. If the filter is damaged do not use it.

4. If you are replacing the safety filter, carefully slide the new filter into the filter body (Figure 33).

   Important: To prevent engine damage, always operate the engine with both air filters and cover installed.

5. Carefully slide the primary filter over the safety filter (Figure 33). Ensure that it is fully seated by pushing on the outer rim of the filter while installing it.

   Important: Do not press on the soft inside area of the filter.

6. Install the air cleaner cover with the side indicated as UP facing up and secure the latches (Figure 33).

7. Close the hood.

Servicing the Engine Oil

Service Interval: After the first 50 hours—Change the engine oil and filter.

Every 100 hours—Change the engine oil.

Every 200 hours—Change the oil filter.

Note: Change oil and oil filter more frequently when operating conditions are extremely dusty or sandy.

Oil Type: Detergent diesel engine oil (API service CH-4 or higher)

Crankcase Capacity: w/filter, 0.98 US gallons (3.7 l)

Viscosity: See table below

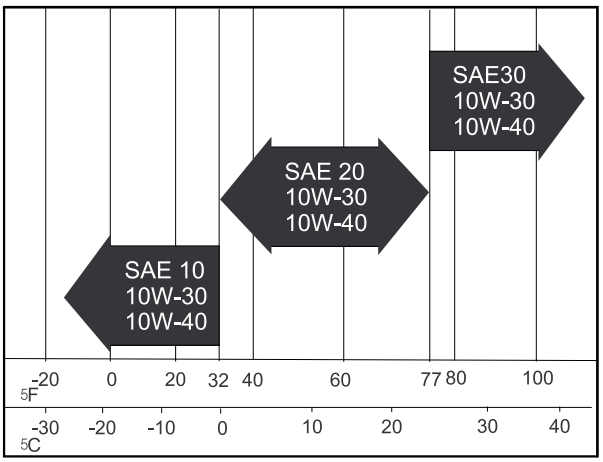

Figure 34

Changing the Oil

1. Start the engine and let it run for five minutes. This warms the oil so it drains better.
2. Park the traction unit so that the drain side is slightly lower than the opposite side to ensure that the oil drains completely.
3. Lower the loader arms, set the parking brake, stop the engine, and remove the key.

   ⚠ CAUTION

   Components will be hot if the traction unit has been running. If you touch hot components you may be burned.

   Allow the traction unit to cool before performing maintenance or touching components under the hood.

4. Remove the drain plug (Figure 35).

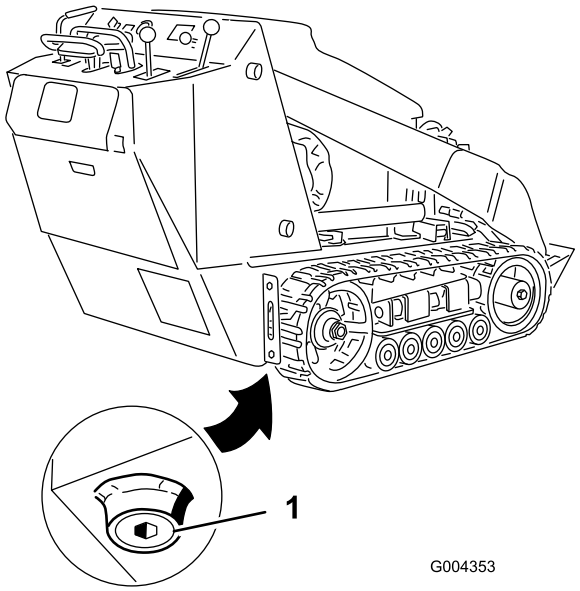

Figure 35

1. Oil drain plug



Figure 36

1. Oil filter

5. When the oil has drained completely, replace the plug.

   Note: Dispose of the used oil at a certified recycling center.

6. Remove the oil fill cap and slowly pour approximately 80% of the specified amount of oil in through the valve cover.
7. Check the oil level; refer to Checking the Engine Oil Level (page 18).
8. Slowly add additional oil to bring the level to the upper hole on the dipstick.
9. Replace the fill cap.

Changing the Oil Filter

1. Drain the oil from the engine; refer to Changing the Oil.
2. Place a shallow pan or rag under the filter to catch oil.
3. Remove the old filter (Figure 36) and wipe the surface of the filter adapter gasket.
4. Pour new oil of the proper type through the center hole of the filter. Stop pouring when the oil reaches the bottom of the threads.
5. Allow a minute or two for the oil to be absorbed by filter material, then pour off the excess oil.
6. Apply a thin coat of new oil to the rubber gasket on the replacement filter.
7. Install the replacement oil filter to the filter adapter. Turn the oil filter clockwise until the rubber gasket contacts the filter adapter, then tighten the filter an additional 1/2 turn.
8. Fill the crankcase with the proper type of new oil; refer to Changing the Oil.

Fuel System Maintenance

⚠ DANGER

Under certain conditions, diesel fuel and fuel vapors are highly flammable and explosive. A fire or explosion from fuel can burn you and others and can cause property damage.

- **Use a funnel and fill the fuel tank outdoors, in an open area, when the engine is off and is cold. Wipe up any fuel that spills.**
- **Do not fill the fuel tank completely full. Add fuel to the fuel tank until the level is 1/4 to 1/2 in. (6 to 13 mm) below the bottom of the filler neck. This empty space in the tank allows the fuel to expand.**
- **Never smoke when handling fuel, and stay away from an open flame or where fuel fumes may be ignited by a spark.**
- **Store fuel in a clean, safety-approved container and keep the cap in place.**

Checking the Fuel Lines and Connections

Service Interval: Every 400 hours/Yearly (whichever comes first)

Inspect the fuel lines and connections for deterioration, damage, or loose connections. Tighten any loose connections and contact your Authorized Service Dealer for assistance in fixing damaged fuel lines.

Draining the Fuel Filter/Water Separator

Service Interval: Before each use or daily

1. Locate the fuel filter on the right side of the engine (Figure 37) and place a clean container under it.

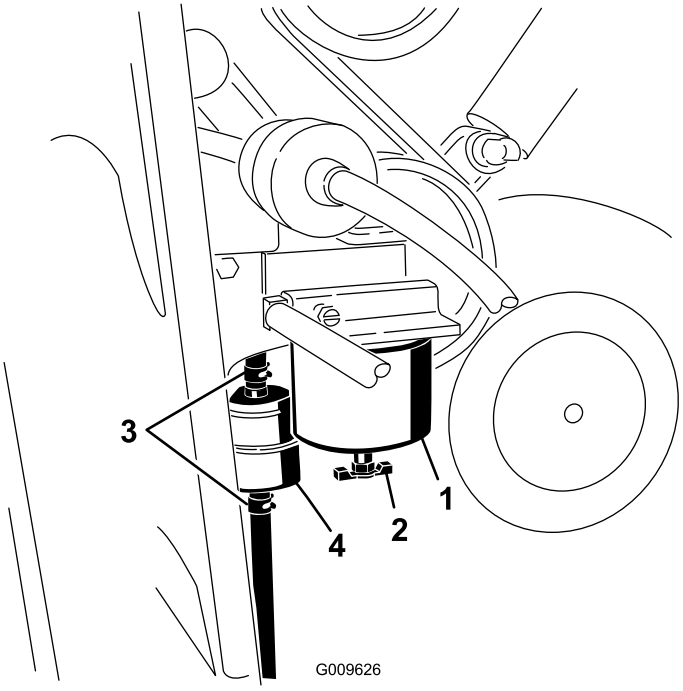

Figure 37

1. Fuel filter canister/water separator
2. Drain valve
3. Hose clamps
4. In-line filter

2. Loosen the drain valve on the bottom of the filter canister and allow the water to drain.
3. When finished, tighten the drain valve.

Replacing the Fuel Filter Canister and In-line Filter

Service Interval: Every 400 hours

1. Locate the fuel filters on the right side of the engine (Figure 37) and place a clean container under it.
2. Clean the area where the filter canister mounts (Figure 37).
3. Remove the filter canister and clean the mounting surface (Figure 37).
4. Lubricate the gasket on the new filter canister with clean oil.
5. Install the filter canister by hand until the gasket contacts the mounting surface, then rotate it an additional 1/2 turn (Figure 37).
6. Locate the in-line filter behind the fuel filter canister (Figure 37) and note the direction of flow arrow on the side of the in-line filter.
7. Open the clamps on each end of the in-line filter and slide the hoses off of it (Figure 37). Discard the filter.
8. Slide the hoses over the end of a new filter (Figure 37), ensuring that the arrow on the filter is

pointing in the same direction as the one on the old filter.

9. Secure the hoses with the hose clamps.

Draining the Fuel Tank

Service Interval: Every 2 years

Have an Authorized Service Dealer drain and clean the fuel tank.

Electrical System Maintenance

Servicing the Battery

Service Interval: Every 100 hours—Check the battery electrolyte level (replacement battery only).

Every 100 hours—Check the battery cable connections.

WARNING

CALIFORNIA
Proposition 65 Warning

Battery posts, terminals, and related accessories contain lead and lead compounds, chemicals known to the State of California to cause cancer and reproductive harm. Wash hands after handling.

Important: The following procedures apply when servicing a (dry) battery that has replaced the original battery. The original (wet) battery does not require service.

Always keep the battery clean and fully charged. Use a paper towel to clean the battery case. If the battery terminals are corroded, clean them with a solution of four parts water and one part baking soda. Apply a light coating of grease to the battery terminals to reduce corrosion.

Voltage: 12 v, 585 Cold Cranking Amps

Checking the Electrolyte Level

1. Stop the engine and remove the key.
2. Look at the side of the battery. The electrolyte must be up to the Upper line (Figure 38). Do not allow the electrolyte to fall below the Lower line (Figure 38).

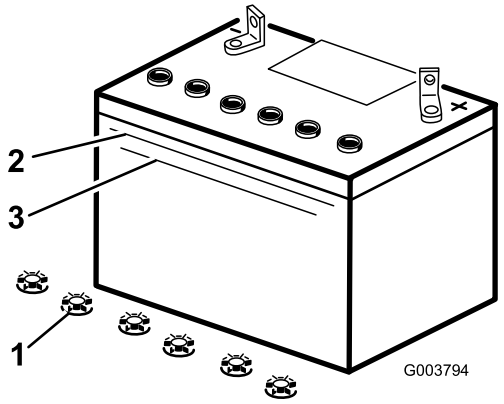

Figure 38

1. Filler caps
2. Upper line
3. Lower line

3. If the electrolyte is low, add the required amount of distilled water; refer to Adding Water to the Battery.

Adding Water to the Battery

The best time to add distilled water to the battery is just before you operate the traction unit. This lets the water mix thoroughly with the electrolyte solution.

⚠ DANGER

Battery electrolyte contains sulfuric acid which is a deadly poison and causes severe burns.

- **Do not drink electrolyte and avoid contact with skin, eyes or clothing. Wear safety glasses to shield your eyes and rubber gloves to protect your hands.**
- **Fill the battery where clean water is always available for flushing the skin.**

1. Remove the battery from the traction unit.

   Important: Never fill the battery with distilled water while the battery is installed in the traction unit. Electrolyte could be spilled on other parts and cause corrosion.

2. Clean the top of the battery with a paper towel.
3. Remove the filler caps from the battery (Figure 38).
4. Slowly pour distilled water into each battery cell until the electrolyte level is up to the Upper line (Figure 38) on the battery case.

   Important: Do not overfill the battery because electrolyte (sulfuric acid) can cause severe corrosion and damage to the chassis.

5. Wait five to ten minutes after filling the battery cells. Add distilled water, if necessary, until the electrolyte level is up to the Upper line (Figure 38) on the battery case.
6. Install the battery filler caps.

Charging the Battery

⚠ WARNING

Charging the battery produces gasses that can explode.

Never smoke near the battery and keep sparks and flames away from battery.

Important: Always keep the battery fully charged (1.265 specific gravity). This is especially important to prevent battery damage when the temperature is below 32°F (0°C).

1. Check the electrolyte level; refer to Checking Electrolyte Level.
2. Make sure the filler caps are installed in the battery.
3. Charge the battery for 10 to 15 minutes at 25 to 30 amps or 30 minutes at 4 to 6 amps (Figure 39). Do not overcharge the battery.

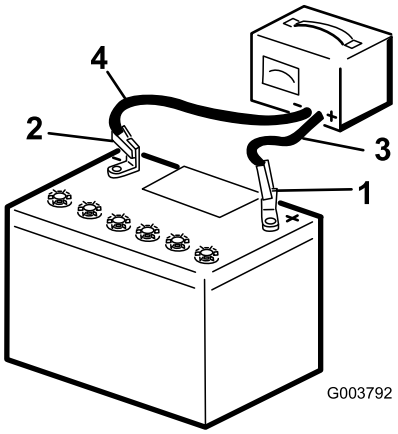

Figure 39

1. Positive battery post
2. Negative battery post
3. Red (+) charger lead
4. Black (-) charger lead

4. When the battery is fully charged, unplug the charger from the electrical outlet, then disconnect the charger leads from the battery posts (Figure 39).
5. Replace the battery cover.

Servicing the Fuses

The electrical system is protected by fuses. It requires no maintenance; however, if a fuse blows, check the component/circuit for a malfunction or a short.

Figure 40 illustrates the fuse block and identifies the fuse positions.

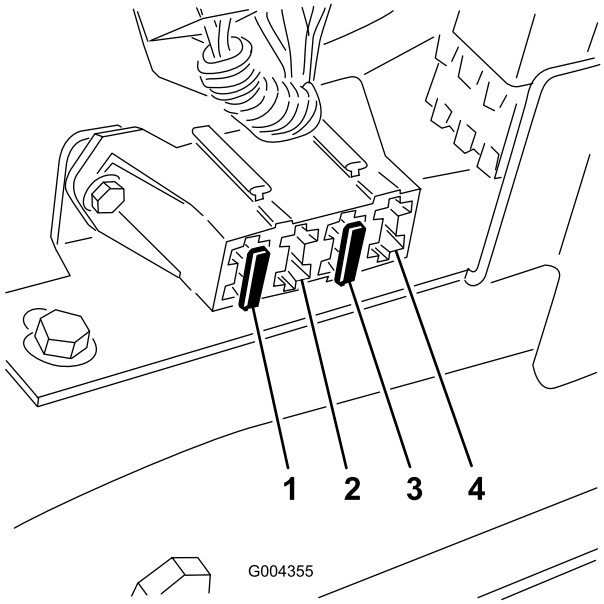

Figure 40

1. 30 amp. fuse—main circuit
2. Empty
3. 10 amp fuse—control panel/relay
4. Open position for optional accessories

Note: If the traction unit will not start, either the main circuit or control panel/relay fuse could be blown.

To access the fuses, you must remove the fuse panel, as follows:

1. Stop the engine and remove the key.
2. Raise the hood.
3. Pull the hairpin cotter from the bottom end of the hood prop-rod and slide the prop rod out of the retaining brackets and the prop-rod tab (Figure 41).

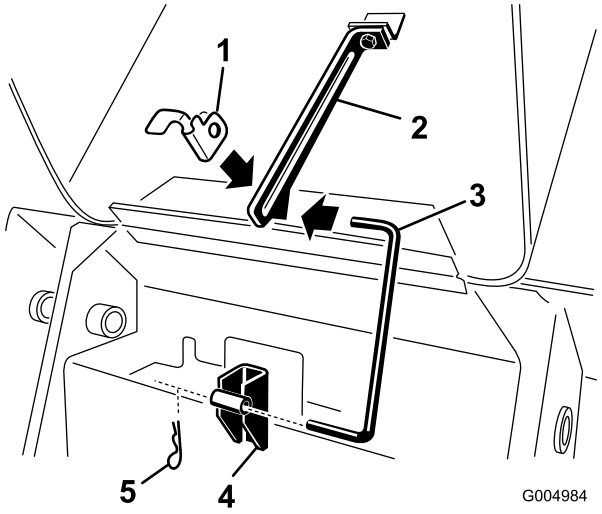

Figure 41

1. Prop-rod tab
2. Retaining bracket—top
3. Prop-rod
4. Retaining bracket—bottom
5. Hairpin cotter

4. Remove the 4 screws securing the fuse panel and then pull the panel out and up to remove it (Figure 42).

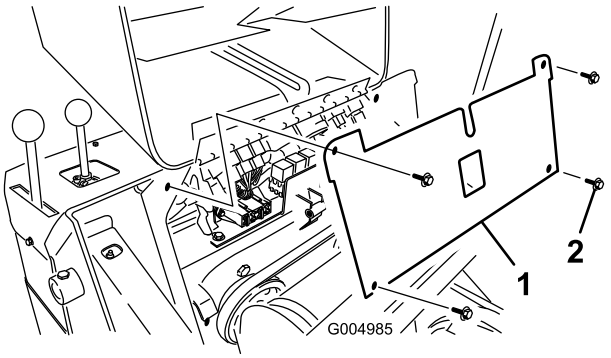

Figure 42

1. Fuse panel
2. Screw

5. Check the fuses.
6. Install the fuse panel using the 4 screws removed previously.
7. Install the prop-rod into the retaining brackets and prop-rod tab and secure it with the hairpin cotter (Figure 41).
8. Close the hood.

Drive System Maintenance

Servicing the Tracks

Service Interval: After the first 50 hours—Check and adjust the track tension.

Before each use or daily—Clean the tracks.

Before each use or daily—Check the tracks for excessive wear (If the tracks are worn, replace them.)

Every 100 hours—Check and adjust the track tension.

Every 250 hours/Yearly (whichever comes first)—Check and grease the road wheels.

Cleaning the Tracks

1. With a bucket on the loader arms, lower the bucket to the ground so that the front of the traction unit lifts off of the ground a few inches.
2. Stop the engine, and remove the key.
3. Using a water hose or pressure washer, remove dirt from each track system.

Important: Ensure that you use high-pressure water to wash only the track area. Do not use a high-pressure washer to clean the rest of the traction unit. Do not use high pressure water between the drive sprocket and the traction unit or you may damage the motor seals. High-pressure washing can damage the electrical system and hydraulic valves or deplete grease.

Important: Ensure that you fully clean the road wheels, the tension wheel, and the drive sprocket (Figure 43). The road wheels should rotate freely when clean.

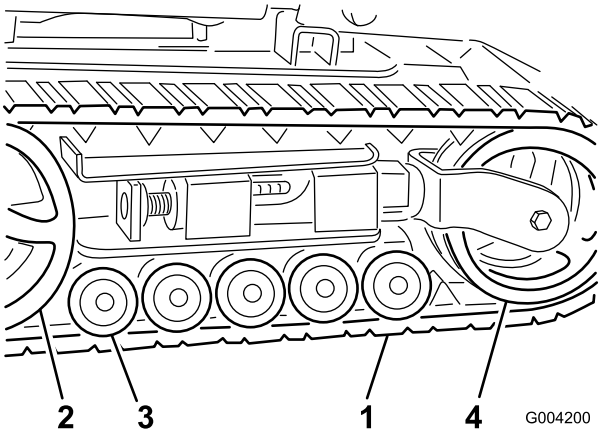

Figure 43

1. Track
2. Drive sprocket
3. Road wheels
4. Tension wheel

Adjusting the Track Tension

There should be 2-3/4 inches (7 cm) between the tension nut and the back of the tension tube (Figure 44). If not, adjust the track tension using the following procedure:

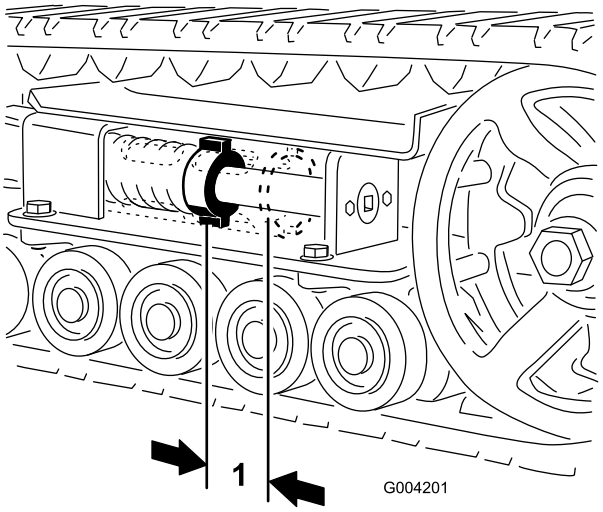

Figure 44

1. 2-3/4 inches (7 cm)

1. Lower the loader arms, stop the engine, and remove the key.
2. Lift/support the side of the unit to be worked on so that the track is off of the ground.
3. Remove the locking bolt and nut (Figure 45).

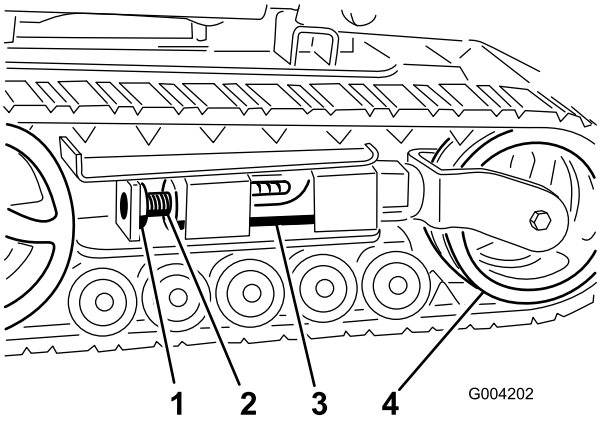

Figure 45

1. Locking bolt
2. Tensioning screw
3. Tension tube
4. Tension wheel

4. Using a 1/2 inch drive socket (Figure 46), turn the tensioning screw counter-clockwise until the distance between the tension nut and the back of the tension tube (Figure 44) is 2-3/4 inches (7 cm).
5. Align the closest notch in the tension screw to the locking bolt hole and secure the screw with the locking bolt and nut (Figure 45).
6. Lower the traction unit to the ground.

Replacing the Tracks (Model 22323)

When the tracks are badly worn, replace them.

1. Lower the loader arms, stop the engine, and remove the key.
2. Lift/support the side of the unit to be worked on so that the track is 3 to 4 inches (7.6 to 10 cm) off of the ground.
3. Remove the locking bolt and nut (Figure 45).
4. Using a 1/2 inch drive socket, release the drive tension by turning the tensioning screw clockwise (Figure 45 and Figure 46).

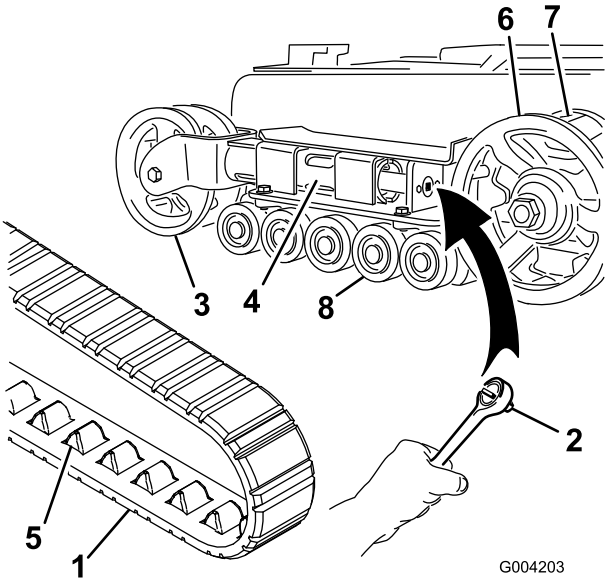

Figure 46

1. Track
2. 1/2 inch socket
3. Tension wheel
4. Fork tube
5. Track lug
6. Drive sprocket
7. Sprocket spacer
8. Road wheels

5. Push the tension wheel toward the rear of the unit to move the fork tube against the frame (Figure 46). (If it does not touch the frame, continue turning the tensioning screw until it does.)
6. Begin removing the track at the top of the tension wheel, peeling it off of the wheel while rotating the track forwards.
7. When the track is off of the tension wheel, remove it from the drive sprocket and road wheels (Figure 46).
8. Beginning at the drive sprocket, coil the new track around the sprocket, ensuring that the lugs on the track fit between the spacers on the sprocket (Figure 46).
9. Push the track under and between the road wheels (Figure 46).
10. Starting at the bottom of the tension wheel, install the track around the wheel by rotating the track rearward while pushing the lugs into the wheel.
11. Turn the tensioning screw counter-clockwise until the distance between the tension nut and the back of the fork tube (Figure 44) is 2-3/4 inches (7 cm).
12. Align the closest notch in the tension screw to the locking bolt hole and secure the screw with the locking bolt and nut.
13. Lower the traction unit to the ground.
14. Repeat steps 2 through 13 to replace the other track.

Replacing the Tracks (Model 22324)

When the tracks are badly worn, replace them.

1. Lower the loader arms, stop the engine, and remove the key.
2. Lift/support the side of the unit to be worked on so that the track is 3 to 4 inches (7.6 to 10 cm) off of the ground.
3. Remove the locking bolt and nut (Figure 45).
4. Using a 1/2 inch drive socket, release the drive tension by turning the tensioning screw clockwise (Figure 45 and Figure 47).

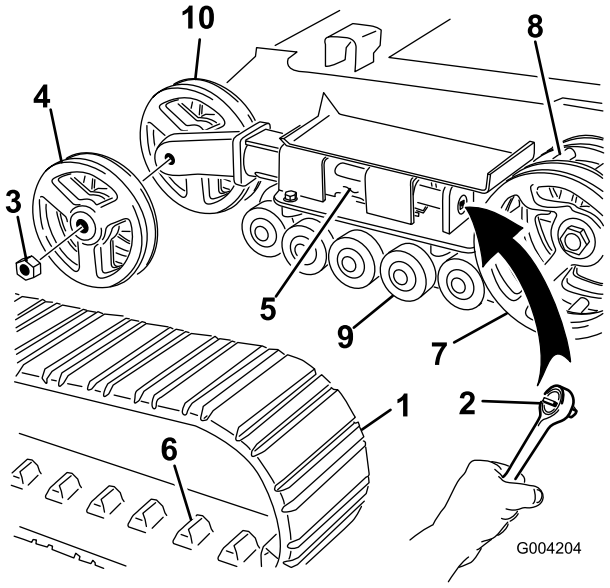

Figure 47

1. Track
2. 1/2 inch socket
3. Tension wheel nut
4. Outer tension wheel
5. Fork tube
6. Track lug
7. Drive sprocket
8. Sprocket spacer
9. Road wheels
10. Inner tension wheel

5. Push the tension wheel toward the rear of the unit to move the tension tube against the frame (Figure 47). (If it does not touch the frame, continue turning the tensioning screw until it does.)
6. Remove the nut securing the outer tension wheel and remove the wheel (Figure 47).
7. Remove the track (Figure 47).
8. Remove the nut securing the inner tension wheel and remove the wheel (Figure 47).
9. Pull the 4 large washers out of the 2 wheels, 1 on each side of each wheel.
10. Clean the old grease and dirt out of the area between where the washers were installed and the bearings inside the wheels, then fill this area on each side of each wheel with grease.
11. Install the large washers on the wheels over the grease.
12. Install the inner tension wheel and secure it with the nut removed previously (Figure 47).
13. Torque the nut to 300 ft-lb (407 N-m).
14. Install the new track, ensuring that the lugs in the track fit between the spacers in the middle of the drive sprocket (Figure 47).
15. Install the outer tension wheel and secure it with the nut removed previously (Figure 47).
16. Torque the nut to 300 ft-lb (407 N-m).
17. Turn the tensioning screw counter-clockwise until the distance between the tension nut and the back of the tension tube (Figure 44) is 2-3/4 inches (7 cm).
18. Align the closest notch in the tension screw to the locking bolt hole and secure the screw with the locking bolt and nut.
19. Repeat steps 2 through 18 to replace the other track.
20. Lower the traction unit to the ground.

Maintaining the Road Wheels

1. Remove the tracks; refer to Replacing the Tracks.
2. Remove the 4 bolts securing each lower track guide which contains the road wheels, and remove them (Figure 48).

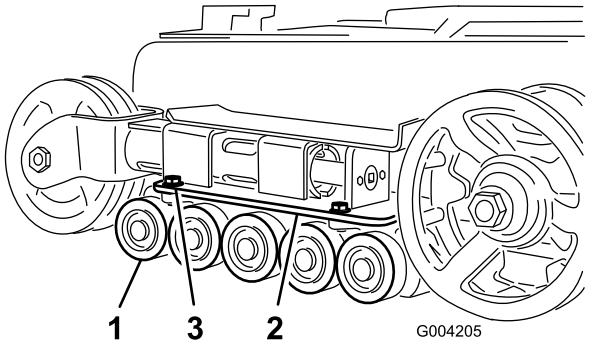

Figure 48

1. Road wheels
2. Lower track guide
3. Track guide bolts (only two shown)

3. Remove the snap ring and cap from a road wheel (Figure 49).

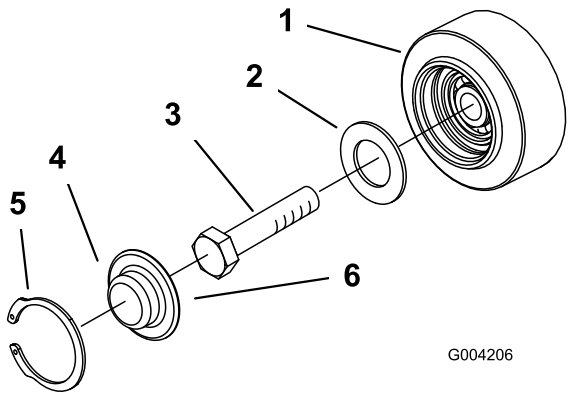

Figure 49

1. Road wheel
2. Gasket
3. Bolt
4. Road wheel cap
5. Snap ring
6. Add grease under the cap

4. Check the grease under the cap and around the gasket (Figure 49). If it is dirty, gritty, or depleted, clean out all of the grease, replace the gasket, and add new grease.
5. Ensure that the road wheel turns smoothly on the bearing. If it is frozen, replace the road wheel as described in the *Road Wheel Kit Installation Instructions* or contact your Authorized Service Dealer for repair.
6. Place the greased road wheel cap over the bolt head (Figure 49).
7. Secure the road wheel cap with the snap ring (Figure 49).
8. Repeat steps 3 through 7 for the other road wheels.
9. Install each track guide to the traction unit frame using the fasteners you removed previously. Torque the bolts to 67 to 83 ft-lb (91 to 112 N-m).
10. Install the tracks; refer to Replacing the Tracks.

Cooling System Maintenance

Servicing the Cooling System

Service Interval: Before each use or daily—Clean the radiator.

Every 100 hours—Check the cooling system hoses.

Yearly—Change the engine coolant (Authorized Service Dealer only).

⚠ DANGER

If the engine has been running, the pressurized, hot coolant can escape and cause severe burns.

- **Do not remove the radiator cap when the engine is hot. Always allow the engine to cool at least 15 minutes or until the radiator cap is cool enough to touch without burning your hand before removing the radiator cap.**
- **Do not touch radiator and surrounding parts that are hot.**
- **Use a rag when opening the radiator cap, and open the cap slowly to allow steam to escape.**

⚠ DANGER

Rotating shaft and fan can cause personal injury.

- **Do not operate the machine without the covers in place.**
- **Keep fingers, hands and clothing clear of rotating fan and drive shaft.**
- **Shut off the engine and remove the ignition key before performing maintenance.**

⚠ CAUTION

Swallowing engine coolant can cause poisoning.

- **Do not swallow engine coolant.**
- **Keep out of reach from children and pets.**

Cleaning Radiator Screen

Before each use, check and clean the radiator screen, located behind the grill at the front of the traction unit. Remove any build-up of grass, dirt or other debris from the radiator screen with compressed air.

Changing the Engine Coolant

Have an Authorized Service Dealer change the engine coolant yearly.

If you need to add engine coolant, refer to Checking, Adding, and Bleeding the Engine Coolant (page 20).

Belt Maintenance

Checking the Condition of the Hydraulic Pump Belt

Service Interval: Yearly

Check the condition of the hydraulic pump belt (Figure 50) yearly. Have an Authorized Service Dealer replace it if it becomes damaged or worn.

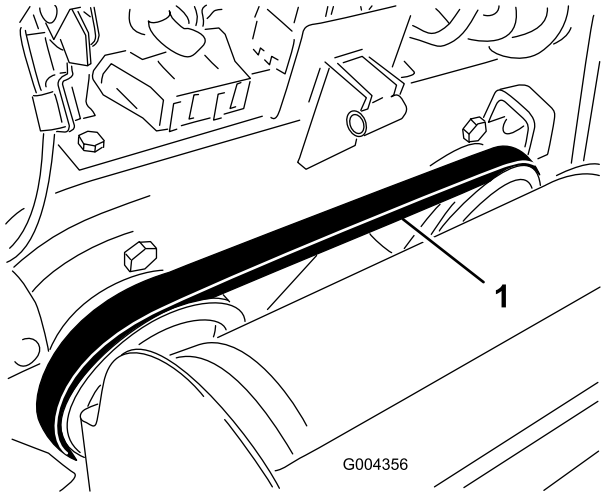

Figure 50

1. Hydraulic Pump Belt

Checking the Alternator/Fan Belt Tension

Service Interval: Every 100 hours—Check the alternator/fan belt tension (refer to the *Engine Operator's Manual* for instructions).

Every 500 hours—Replace the alternator/fan belt (refer to the *Engine Operator's Manual* for instructions).

Controls System Maintenance

The factory adjusts the controls before shipping the traction unit. However, after many hours of use, you may need to adjust the traction control alignment, the neutral position of the traction control, and the tracking of the traction control in the full forward position.

Important: To adjust the controls properly, complete each procedure in the order listed.

Adjusting the Traction Control Alignment

If the traction control bar does not rest flush and square with the reference bar when in the full backward position, immediately complete the following procedure:

1. Park the traction unit on a flat surface and lower the loader arm.
2. Stop the engine and remove the key.
3. Pull straight back on the traction control so the front of the control contacts the reference bar (Figure 51).

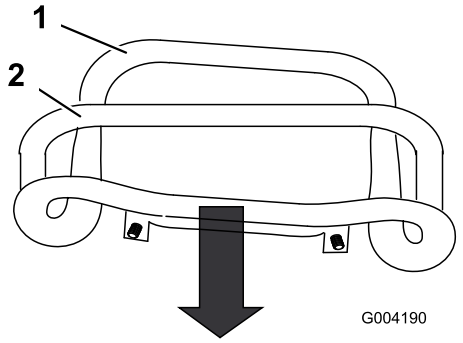

Figure 51

1. Front of the control, out of alignment
2. Reference bar

4. If the front of the traction control does not rest square and flush with the reference bar, loosen the flange nut and bolt in the stem of the traction control (Figure 52).

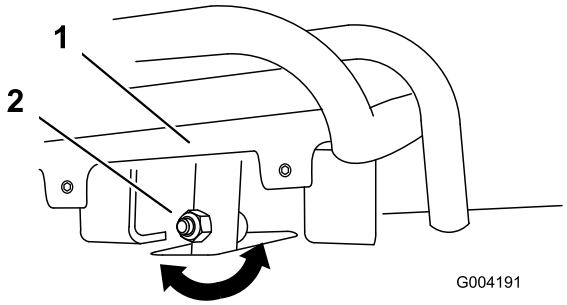

Figure 52

1. Traction control
2. Stem , bolt and nut

5. Adjust the traction control so that it rests flush against the reference bar when it is pulled straight back (Figure 52 and Figure 53).

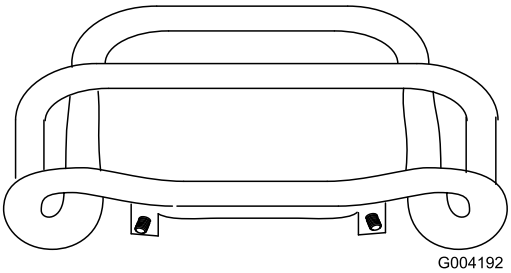

Figure 53

6. Tighten the flange nut and bolt in the traction control stem.

Adjusting the Traction Control Neutral Position

If the traction unit creeps forward or backward when the traction control is in neutral and the unit is warm, immediately complete the following procedure:

1. Lift/support the traction unit so that both tracks are off of the ground.
2. Open the rear access cover.
3. Loosen the jam nuts on the traction rods, under the control panel (Figure 54).

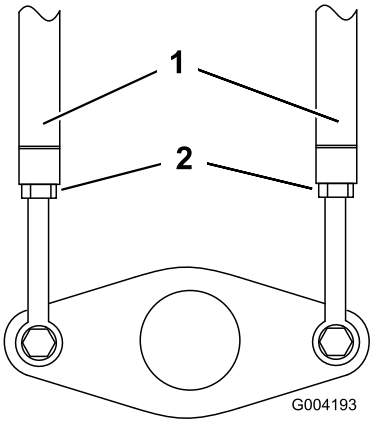

Figure 54

1. Traction rod
2. Jam nut

4. Start the traction unit and set the throttle to about 1/3 open position.

⚠ WARNING

When the traction unit is running, you could be caught and injured in moving parts or burned on hot surfaces.

Stay away from pinch points, moving parts, and hot surfaces when adjusting the running traction unit.

5. If the **left** track moves, lengthen or shorten the **right** traction rod until the track stops moving.
6. If the **right** track moves, lengthen or shorten the **left** traction rod until the track stops moving.
7. Tighten the jam nuts.
8. Close the rear access cover.
9. Stop the engine and lower the traction unit to the ground.
10. Drive the traction unit in full reverse, checking to see if the unit tracks straight. If it does not, note the direction the traction unit veers. Repeat the adjustment previously described so that it tracks straight in reverse.

Adjusting the Tracking of the Traction Control, Full Forward Position

If the traction unit does not drive straight when you hold the traction control against the reference bar, complete the following procedure:

1. Drive the traction unit with the traction control against the reference bar, noting which direction the traction unit veers.
2. Release the traction control.
3. If the traction unit veers to the **left**, loosen the **right** jam nut and adjust the tracking set screw on the front of the traction control (Figure 55).
4. If the traction unit veers to the **right**, loosen the **left** jam nut and adjust the tracking set screw on the front of the traction control (Figure 55).

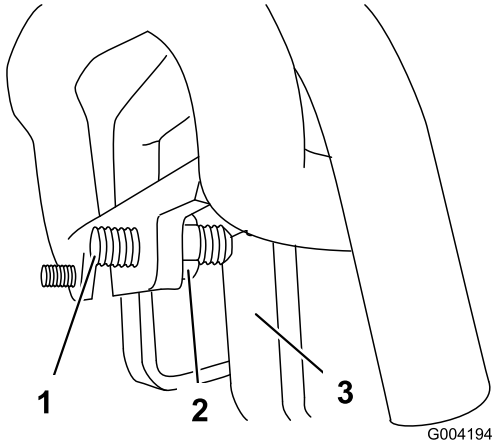

Figure 55

1. Set screw
2. Jam nut
3. Stop

5. Repeat steps 1 through 4 until the traction unit drives straight in the full forward position.

Important: Ensure the tracking set screws touch the stops in the full forward position to avoid over stroking the hydraulic pumps.

Hydraulic System Maintenance

Replacing the Hydraulic Filter

Service Interval: After the first 8 hours

Every 200 hours

Important: Do not substitute an automotive oil filter or severe hydraulic system damage may result.

1. Position traction unit on a level surface.
2. Lower the loader arms, stop the engine, and remove the key.
3. Open the rear access cover.
4. Place a drain pan under the filter (Figure 56).

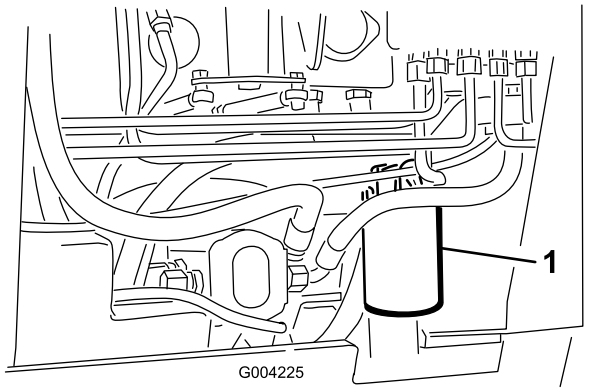

Figure 56

1. Hydraulic filter

5. Remove the old filter (Figure 56) and wipe the surface of the filter adapter gasket clean.
6. Apply a thin coat hydraulic fluid to the rubber gasket on the replacement filter.
7. Install the replacement hydraulic filter onto the filter adapter (Figure 56). Tighten it clockwise until the rubber gasket contacts the filter adapter, then tighten the filter an additional 3/4 turn.
8. Clean up any spilled fluid.
9. Start the engine and let it run for about two minutes to purge air from the system.
10. Stop the engine and check for leaks.

⚠ WARNING

Hydraulic fluid escaping under pressure can penetrate skin and cause injury. Fluid injected into the skin must be surgically removed within a few hours by a doctor familiar with this form of injury or gangrene may result.

- **Keep your body and hands away from pin hole leaks or nozzles that eject high pressure hydraulic fluid.**
- **Use cardboard or paper to find hydraulic leaks, never use your hands.**

11. Check the fluid level in the hydraulic tank (refer to Checking the Hydraulic Fluid Level (page 19)) and add fluid to raise the level to mark on dipstick. Do not over fill the tank.
12. Close the rear access cover.

Changing the Hydraulic Fluid

Service Interval: Every 400 hours/Yearly (whichever comes first)

1. Position the traction unit on a level surface.
2. Open the hood.
3. Install the cylinder lock, stop the engine, and remove the key.
4. Allow the traction unit to cool completely.
5. Remove the hydraulic tank cap and dipstick (Figure 57).

Note: The filler cap is behind the front screen. If you want to improve your access to it, remove the screen.

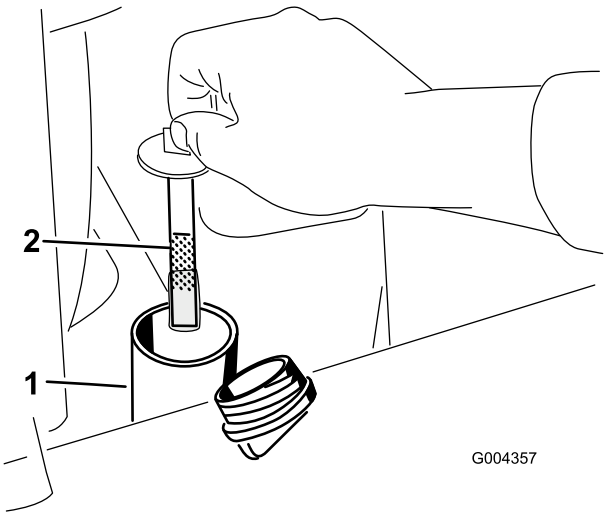

Figure 57

1. Filler neck
2. Dip stick

6. Place a large drain pain (capable of holding 15 US gallons) under the drain plug on the front of the traction unit (Figure 58).

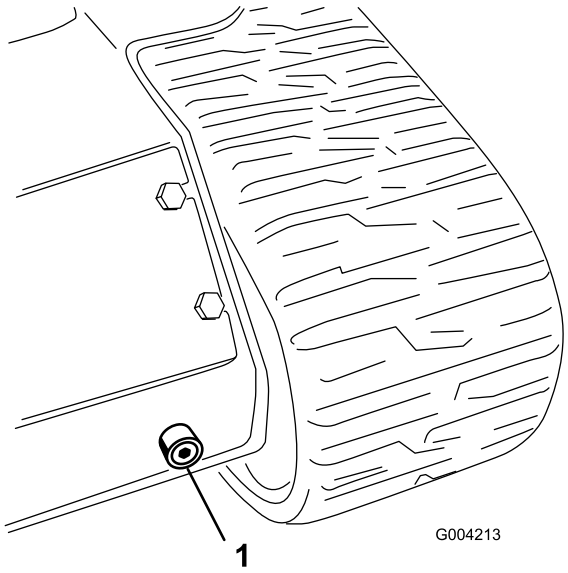

Figure 58

1. Drain plug

7. Remove the drain plug and allow the oil to drain into the pan (Figure 58).
8. When finished, install and tighten the drain plug.

   Note: Dispose of the used oil at a certified recycling center.
9. Fill the hydraulic tank with approximately 12 US gallons (45.4 l) of 10W-30 or 15W-40 detergent, diesel engine oil (API service CH-4 or higher); refer to Checking the Hydraulic Fluid Level (page 19).
10. Start the engine and let it run for a few minutes.
11. Stop the engine.
12. Check the hydraulic fluid level and top it off if necessary; refer to Checking the Hydraulic Fluid Level (page 19).
13. Close the hood.

Checking the Hydraulic Lines

Service Interval: Every 100 hours—Check the hydraulic lines for leaks, loose fittings, kinked lines, loose mounting supports, wear, weather, and chemical deterioration. (Make necessary repairs before operating.)

Every 1,500 hours/Every 2 years (whichever comes first)—Replace all moving hydraulic hoses.

⚠ WARNING

Hydraulic fluid escaping under pressure can penetrate skin and cause injury. Fluid injected into the skin must be surgically removed within a few hours by a doctor familiar with this form of injury or gangrene may result.

- **Keep your body and hands away from pin hole leaks or nozzles that eject high pressure hydraulic fluid.**
- **Use cardboard or paper to find hydraulic leaks, never use your hands.**

Cleaning

Removing Debris from the Traction Unit

Service Interval: Before each use or daily

Important: Operating the engine with blocked screens and/or cooling shrouds removed, will result in engine damage from overheating.

1. Park the traction unit on a level surface, lower the loader arms, and stop the engine.
2. Remove the key and allow the engine to cool.
3. Open the hood.
4. Clean any debris from the front and side screens.
5. Wipe away debris from the air cleaner.
6. Clean any debris build-up on the engine and in the oil cooler fins with a brush or blower.

   Important: It is preferable to blow dirt out, rather than washing it out. If water is used, keep it away from electrical items and hydraulic valves. Do not use a high-pressure washer. High-pressure washing can damage the electrical system and hydraulic valves or deplete grease.
7. Clean debris from the hood opening, muffler, and heat shields.
8. Close the hood.

Cleaning the Chassis

Service Interval: Every 100 hours—Check for dirt build-up in the chassis.

Over time, the chassis under the engine collects dirt and debris that must be removed. Using a flashlight, open the hood and inspect the area under the engine on a regular basis. When the debris is 1 to 2 inches deep, have an Authorized Service Dealer remove the rear of the traction unit, fuel tank, and battery and flush the chassis clean.

Storage

1. Lower the loader arms, stop the engine, and remove the key.
2. Remove dirt and grime from the entire traction unit.

   Important: You can wash the traction unit with mild detergent and water. Do not pressure wash the traction unit. Avoid excessive use of water, especially near the control panel, engine, hydraulic pumps, and motors.
3. Service the air cleaner; refer to Servicing the Air Cleaner.
4. Grease the traction unit; refer to Greasing the Traction Unit.
5. Change the crankcase oil; refer to Servicing the Engine Oil.
6. Charge the battery; refer to Servicing the Battery.
7. Check and adjust the track tension; refer to Adjusting the Track Tension.
8. Check and tighten all bolts, nuts, and screws. Repair or replace any part that is damaged.
9. Paint all scratched or bare metal surfaces. Paint is available from your Authorized Service Dealer.
10. Store the traction unit in a clean, dry garage or storage area. Remove the key from the ignition switch and keep it in a memorable place.
11. Cover the traction unit to protect it and keep it clean.

Troubleshooting

Problem	Possible Cause	Corrective Action
The starter does not crank	1. The electrical connections are corroded or loose.	1. Check the electrical connections for good contact.
	2. A fuse is blown or loose.	2. Correct or replace the fuse.
	3. The battery is discharged.	3. Charge the battery or replace it.
	4. The relay or switch is damaged.	4. Contact your Authorized Service Dealer.
	5. A damaged starter or starter solenoid.	5. Contact your Authorized Service Dealer.
	6. Seized internal engine components.	6. Contact your Authorized Service Dealer.
The engine cranks, but will not start.	1. Incorrect starting procedure.	1. Refer to Starting and Stopping the Engine
	2. The fuel tank is empty.	2. Fill with fresh fuel.
	3. The fuel shut-off valve is closed.	3. Open the fuel shut-off valve.
	4. Dirt, water, stale fuel, or incorrect fuel is in the fuel system.	4. Drain and flush the fuel system; add fresh fuel.
	5. Clogged fuel line.	5. Clean or replace.
	6. There is air in the fuel.	6. Bleed the nozzles and check for air leaks at the fuel hose connections and fittings between the fuel tank and engine.
	7. Inoperative glow plugs.	7. Check the fuse, glow plugs, and wiring.
	8. Slow cranking speed.	8. Check the battery, oil viscosity, and starting motor (contact your Authorized Service Dealer).
	9. The air cleaner filters are dirty.	9. Service the air filters.
	10. The fuel filter is clogged.	10. Replace the fuel filter.
	11. Improper fuel grade for cold weather use.	11. Drain the fuel system and replace the fuel filter. Add fresh fuel of proper grade for ambient temperature conditions. You may need to warm the entire traction unit.
	12. Low compression.	12. Contact your Authorized Service Dealer.
	13. The injection nozzles or pump are malfunctioning.	13. Contact your Authorized Service Dealer.
	14. The ETR solenoid is broken.	14. Contact your Authorized Service Dealer.
The engine starts, but does not keep running.	1. The fuel tank vent is restricted.	1. Loosen the cap. If the engine runs with the cap loosened, replace the cap.
	2. Dirt or water is in the fuel system.	2. Drain and flush the fuel system; add fresh fuel.
	3. The fuel filter is clogged.	3. Replace the fuel filter.
	4. There is air in the fuel.	4. Bleed the nozzles and check for air leaks at fuel hose connections and fittings between the fuel tank and engine.
	5. Improper fuel grade for cold weather use.	5. Drain the fuel system and replace the fuel filter. Add fresh fuel of proper grade for ambient temperature conditions.
	6. The spark arrestor screen is clogged.	6. Clean or replace the spark arrestor screen.
	7. The fuel pump is damaged.	7. Contact your Authorized Service Dealer.

Problem	Possible Cause	Corrective Action
The engine runs, but knocks or misses.	1. Dirt, water, stale fuel, or incorrect fuel is in the fuel system. 2. Engine overheating. 3. There is air in the fuel. 4. The injection nozzles are damaged. 5. Low compression 6. The injection pump timing is incorrect. 7. Excessive carbon build-up. 8. Internal wear or damage.	1. Drain and flush the fuel system; add fresh fuel. 2. Refer to Engine Overheats. 3. Bleed nozzles and check for air leaks at the fuel hose connections and fittings between the fuel tank and engine. 4. Contact your Authorized Service Dealer. 5. Contact your Authorized Service Dealer. 6. Contact your Authorized Service Dealer. 7. Contact your Authorized Service Dealer. 8. Contact your Authorized Service Dealer.
The engine will not idle.	1. The fuel tank vent is restricted. 2. Dirt, water, stale fuel, or incorrect fuel is in the fuel system. 3. The air cleaner filters are dirty. 4. The fuel filter is clogged. 5. There is air in the fuel. 6. The fuel pump is damaged. 7. Low compression	1. Loosen the cap. If the engine runs with the cap loosened, replace the cap. 2. Drain and flush the fuel system; add fresh fuel. 3. Service the air filters. 4. Replace the fuel filter. 5. Bleed the nozzles and check for air leaks at fuel hose connections and fittings between the fuel tank and engine. 6. Contact your Authorized Service Dealer. 7. Contact your Authorized Service Dealer.
The engine overheats.	1. More coolant is needed. 2. Restricted air flow to the radiator. 3. The crankcase oil level is incorrect. 4. Excessive loading. 5. Incorrect fuel is in the fuel system. 6. The thermostat is damaged. 7. The fan belt is loose or broken. 8. Injection timing is incorrect. 9. Coolant pump is damaged.	1. Check and add coolant. 2. Inspect and clean the radiator screen with every use. 3. Fill or drain to the full mark. 4. Reduce load; use lower ground speed. 5. Drain and flush the fuel system; add fresh fuel. 6. Contact your Authorized Service Dealer. 7. Contact your Authorized Service Dealer. 8. Contact your Authorized Service Dealer. 9. Contact your Authorized Service Dealer.
Excessive black smoke from exhaust.	1. Excessive loading. 2. The air cleaner filters are dirty. 3. Incorrect fuel is in the fuel system. 4. The injection pump timing is incorrect. 5. The injection pump is damaged. 6. The injection nozzles are damaged.	1. Reduce load; use lower ground speed. 2. Service the air filters. 3. Drain the fuel system and refill with specified fuel. 4. Contact your Authorized Service Dealer. 5. Contact your Authorized Service Dealer. 6. Contact your Authorized Service Dealer.

Problem	Possible Cause	Corrective Action
Excessive white smoke from exhaust.	1. The key was turned to the start position before the glow plug light turned off.	1. Turn the key to the run position and allow the glow plug light to turn off before starting the engine.
	2. The engine temperature is low.	2. Check the thermostat.
	3. The glow plugs are inoperative.	3. Check the fuse, glow plugs and wiring.
	4. The injection pump timing is incorrect.	4. Contact your Authorized Service Dealer.
	5. The injection nozzles are damaged.	5. Contact your Authorized Service Dealer.
	6. Low compression	6. Contact your Authorized Service Dealer.
The engine loses power.	1. The engine load is excessive.	1. Reduce ground speed.
	2. The crankcase oil level is incorrect.	2. Fill or drain to the full mark.
	3. The air cleaner filters are dirty.	3. Service the air filters.
	4. Dirt, water, stale fuel, or incorrect fuel is in the fuel system.	4. Drain and flush the fuel system; add fresh fuel.
	5. Engine overheating.	5. Refer to Engine Overheats.
	6. The spark arrestor screen is clogged.	6. Clean or replace the spark arrestor screen.
	7. There is air in the fuel.	7. Bleed the nozzles and check for air leaks at fuel hose connections and fittings between the fuel tank and engine.
	8. Low compression	8. Contact your Authorized Service Dealer.
	9. The fuel tank vent is restricted.	9. Contact your Authorized Service Dealer.
	10. The injection pump timing is incorrect.	10. Contact your Authorized Service Dealer.
	11. The injection pump is damaged.	11. Contact your Authorized Service Dealer.
Traction unit does not drive.	1. The parking brake is on.	1. Release the parking brake.
	2. Hydraulic fluid level low.	2. Add hydraulic fluid to the reservoir.
	3. The tow valves are open.	3. Close the tow valves.
	4. Pump and/or wheel motor is damaged.	4. Contact your Authorized Service Dealer.
	5. Relief valve is damaged.	5. Contact your Authorized Service Dealer.

Schematics

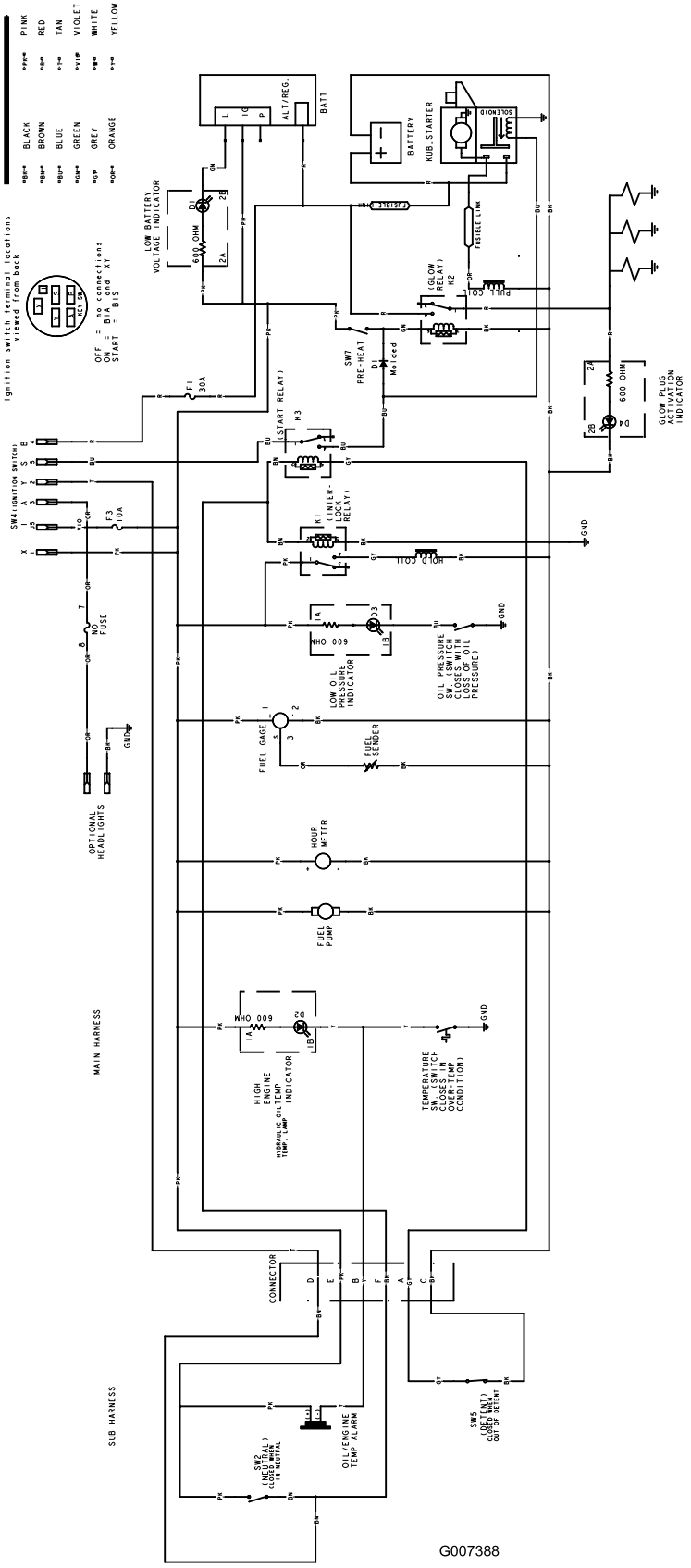

Electrical Schematic (Rev. B)

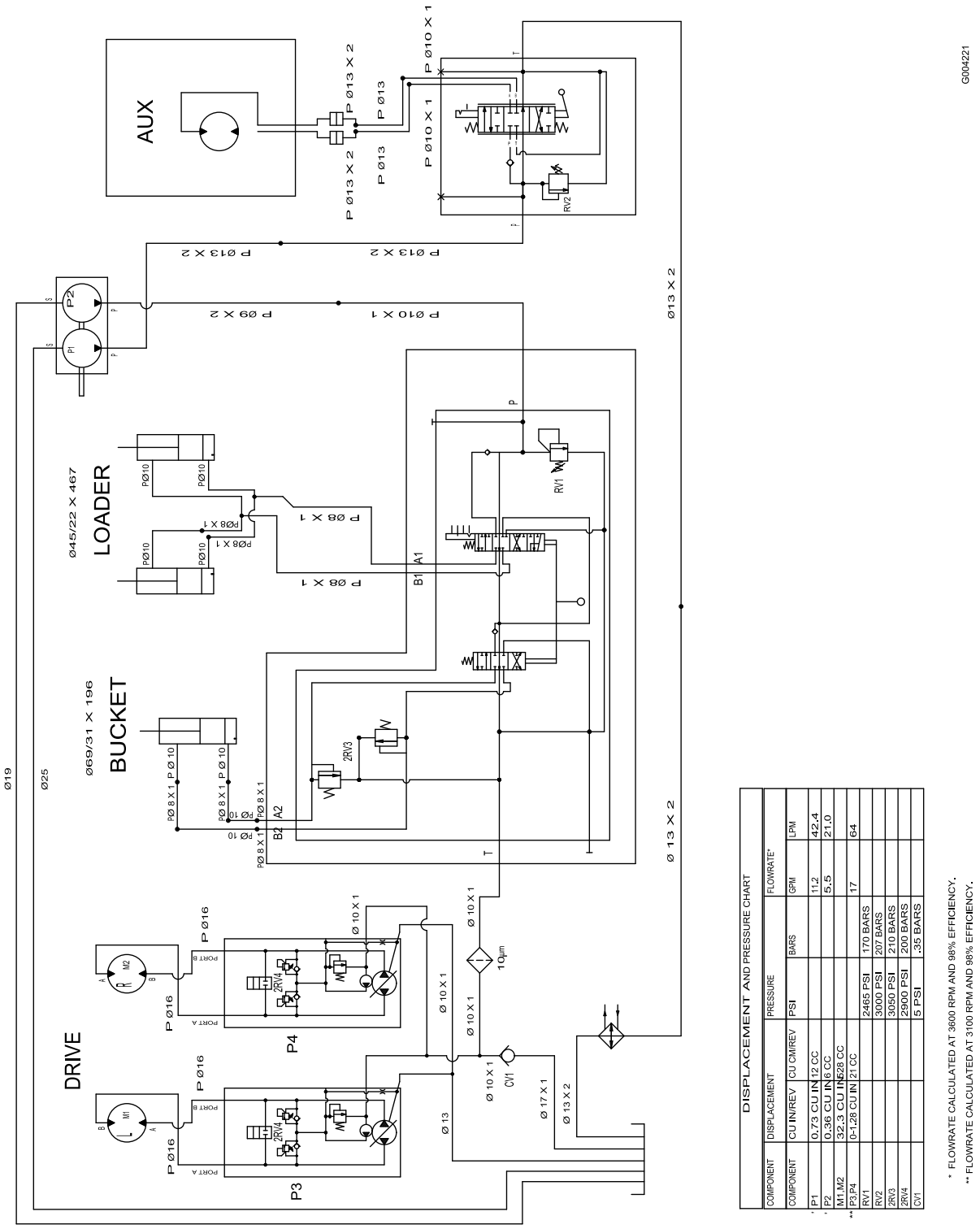

DISPLACEMENT AND PRESSURE CHART

COMPONENT	DISPLACEMENT	PRESSURE		FLOWRATE*	
COMPONENT	CU IN/REV / CU CM/REV	PSI	BARS	GPM	LPM
* P1	0.73 CU IN 12 CC			11.2	42.4
* P2	0.36 CU IN 6 CC			5.5	21.0
M1,M2	32.3 CU IN 528 CC				
** P3,P4	0-1.28 CU IN 21 CC			17	64
RV1		2465 PSI	170 BARS		
RV2		3000 PSI	207 BARS		
2RV3		3050 PSI	210 BARS		
2RV4		2900 PSI	200 BARS		
CV1		5 PSI	.35 BARS		

* FLOWRATE CALCULATED AT 3600 RPM AND 98% EFFICIENCY.

** FLOWRATE CALCULATED AT 3100 RPM AND 98% EFFICIENCY.

G004221

Hydraulic Schematic (Rev. A)

Notes:

Toro Compact Utility Equipment Warranty

A One-Year Limited Warranty

CUE Products

Conditions and Products Covered

The Toro® Company and its affiliate, Toro Warranty Company, pursuant to an agreement between them, jointly warrant your Toro Compact Utility Equipment ("Product") to be free from defects in materials or workmanship. The following time periods apply from the date of purchase:

Products	Warranty Period
Loaders, Trenchers and Attachments	1 year or 1000 operating hours, whichever occurs first
Kohler Engines	3 years
All other Engines	2 years

Where a warrantable condition exists, we will repair the Product at no cost to you including diagnosis, labor, and parts.

Instructions for Obtaining Warranty Service

If you think that your Toro Product contains a defect in materials or workmanship, follow this procedure:

1. Contact any Authorized Toro Compact Utility Equipment (CUE) Service Dealer to arrange service at their dealership. To locate a dealer convenient to you, access our website at www.Toro.com. You may also call our Toro Customer Care Department toll free at 888-865-5676 (U.S. customers) or 888-865-5691 (Canadian customers).
2. Bring the product and your proof of purchase (sales receipt) to the Service Dealer.
3. If for any reason you are dissatisfied with the Service Dealer's analysis or with the assistance provided, contact us at:

   LCB Customer Care Department
   Toro Warranty Company
   8111 Lyndale Avenue South
   Bloomington, MN 55420-1196
   Toll Free: 888-865-5676 (U.S. customers)
   Toll Free: 888-865-5691 (Canada customers)

Owner Responsibilities

You must maintain your Toro Product by following the maintenance procedures described in the *Operator's Manual*. Such routine maintenance, whether performed by a dealer or by you, is at your expense. Parts scheduled for replacement as required maintenance ("Maintenance Parts"), are warranted for the period of time up to the scheduled replacement time for that part. Failure to perform required maintenance and adjustments can be grounds for disallowing a warranty claim.

Items and Conditions Not Covered

Not all product failures or malfunctions that occur during the warranty period are defects in materials or workmanship. This express warranty does not cover the following:

- Product failures which result from the use of non-Toro replacement parts, or from installation and use of add-on, modified, or unapproved accessories
- Product failures which result from failure to perform required maintenance and/or adjustments
- Product failures which result from operating the Product in an abusive, negligent or reckless manner
- Parts subject to consumption through use unless found to be defective. Examples of parts which are consumed, or used up, during normal Product operation include, but are not limited to, digging teeth, tines, spark plugs, tires, tracks, filters, chains, etc.
- Failures caused by outside influence. Items considered to be outside influence include, but are not limited to, weather, storage practices, contamination, use of unapproved coolants, lubricants, additives, or chemicals, etc.
- Normal "wear and tear" items. Normal "wear and tear" includes, but is not limited to, worn painted surfaces, scratched decals or windows, etc.
- Any component covered by a separate manufacturer's warranty
- Pickup and delivery charges

General Conditions

Repair by an Authorized Toro Compact Utility Equipment (CUE) Service Dealer is your sole remedy under this warranty.

Neither The Toro® Company nor Toro Warranty Company is liable for indirect, incidental or consequential damages in connection with the use of the Toro Products covered by this warranty, including any cost or expense of providing substitute equipment or service during reasonable periods of malfunction or non-use pending completion of repairs under this warranty. All implied warranties of merchantability and fitness for use are limited to the duration of this express warranty. Some states do not allow exclusions of incidental or consequential damages, or limitations on how long an implied warranty lasts, so the above exclusions and limitations may not apply to you.

This warranty gives you specific legal rights, and you may also have other rights which vary from state to state.

Except for the engine warranty coverage and the Emissions warranty referenced below, if applicable, there is no other express warranty. The Emissions Control System on your Product may be covered by a separate warranty meeting requirements established by the U.S. Environmental Protection Agency (EPA) or the California Air Resources Board (CARB). The hour limitations set forth above do not apply to the Emissions Control System Warranty. Refer to the California Emission Control Warranty Statement supplied with your Product or contained in the engine manufacturer's documentation for details.

Countries Other than the United States or Canada

Customers who have purchased Toro products exported from the United States or Canada should contact their Toro Distributor (Dealer) to obtain guarantee policies for your country, province, or state. If for any reason you are dissatisfied with your Distributor's service or have difficulty obtaining guarantee information, contact the Toro importer. If all other remedies fail, you may contact us at Toro Warranty Company.