Form No. 3313-593 Rev A

TORO®

Count on it.

Parts Catalog

624 Power Shift® Snowthrower

Model No. 38510—Serial No. 9000001 and Up

Ordering Replacement Parts

To order replacement parts, please supply the part number, the quantity, and the description of each part desired.

Understanding Reference Numbers

Each identified part in an illustration has a reference number. The reference number for a part also appears in the parts list, along with other information about the part.

This catalog uses two special reference number formats, one to indicate parts in a service assembly and another to indicate the quantity of a given part in an illustration.

Service Assembly Reference Numbers

Parts in service assemblies have reference numbers in the form a:b. The a represents the reference number of the entire service assembly and the b represents a sequential number unique to each part within the service assembly.

For example, a wheel assembly might be identified by reference number 6, the tire by 6:1, the valve by 6:2, and the wheel by 6:3. When you order the assembly identified by reference number 6, you receive all parts identified by reference numbers 6:1,6:2, and 6:3. However, you may also order any part individually. Reference numbers of this type appear in illustration and in parts lists.

Reference Numbers Indicating Quantity

In an illustration, if a reference number indicates more than one part, the reference number has the form nX y. The n represents the quantity of the part, the X is the multiplication symbol, and the y represents the reference number.

For example, in an illustration, the reference number 2X 37 means that two of the parts identified by reference number 37 are indicated.

List of Abbreviations

AR: as required

ASM: assembly

BBC: blade brake clutch

CARR: carriage

CCW: counter clock wise

CW: clockwise

DEG: degrees

ECM: electronic control module

EXT: external

FH: flat head

GA: gauge

HD: heavy-duty

HF: hex flange

HH: hex head

HHF: hex head flange

HHFTF: hex head flange thread forming

HJ: hex jam

HLH: hex lag head

HOC: height-of-cut

HSBH: hex socket button head

HSFH: hex socket flat head

HSH: hex socket head

HWH: hex washer head

HWHTF: hex washer head thread forming

HYD: hydraulic

LH: left hand

NI: nylon insert

NPTF: national pipe thread fine

PFH: phillips flat head

PPH: phillips pan head

PPHTF: phillips pan head thread forming

PRH: phillips round head

PTH: phillips truss head

PTO: power-take-off

RH: right hand

ROPS: roll-over protection system

RRB: rear roller brush

SFH: slotted fillister head

SHH: slotted hex head

SHWH: slotted hex washer head

SPH: slotted pan head

SQH: square head

SRH: slotted round head

STD: standard

TAP: self tapping

TTH: torx truss head

© 2010—The Toro® Company
8111 Lyndale Avenue South
Bloomington, MN 55420

Contact us at www.Toro.com.
Printed in the USA.
All Rights Reserved

Contents

Housing and Chute Assembly 4
24 Inch Gear Case Assembly 6
Engine Assembly 7
Transmission Assembly No. 66-8030 8
Traction Drive Assembly 10
Traction Linkage Assembly 11
Handle Assembly 12
Drift Breaker Assembly No. 66-7960 (optional) 14
Light Kit No. 66-7930 (optional) 15
Snow Cab Assembly No. 66-6200 (optional) 16
Electric Starter Motor Kit No. 38-7590 (optional) 17
Engine Tecumseh Model No. H60-75504w 18
Carburetor Tecumseh No. 632379 22
Rewind Starter Tecumseh No. 590604 23

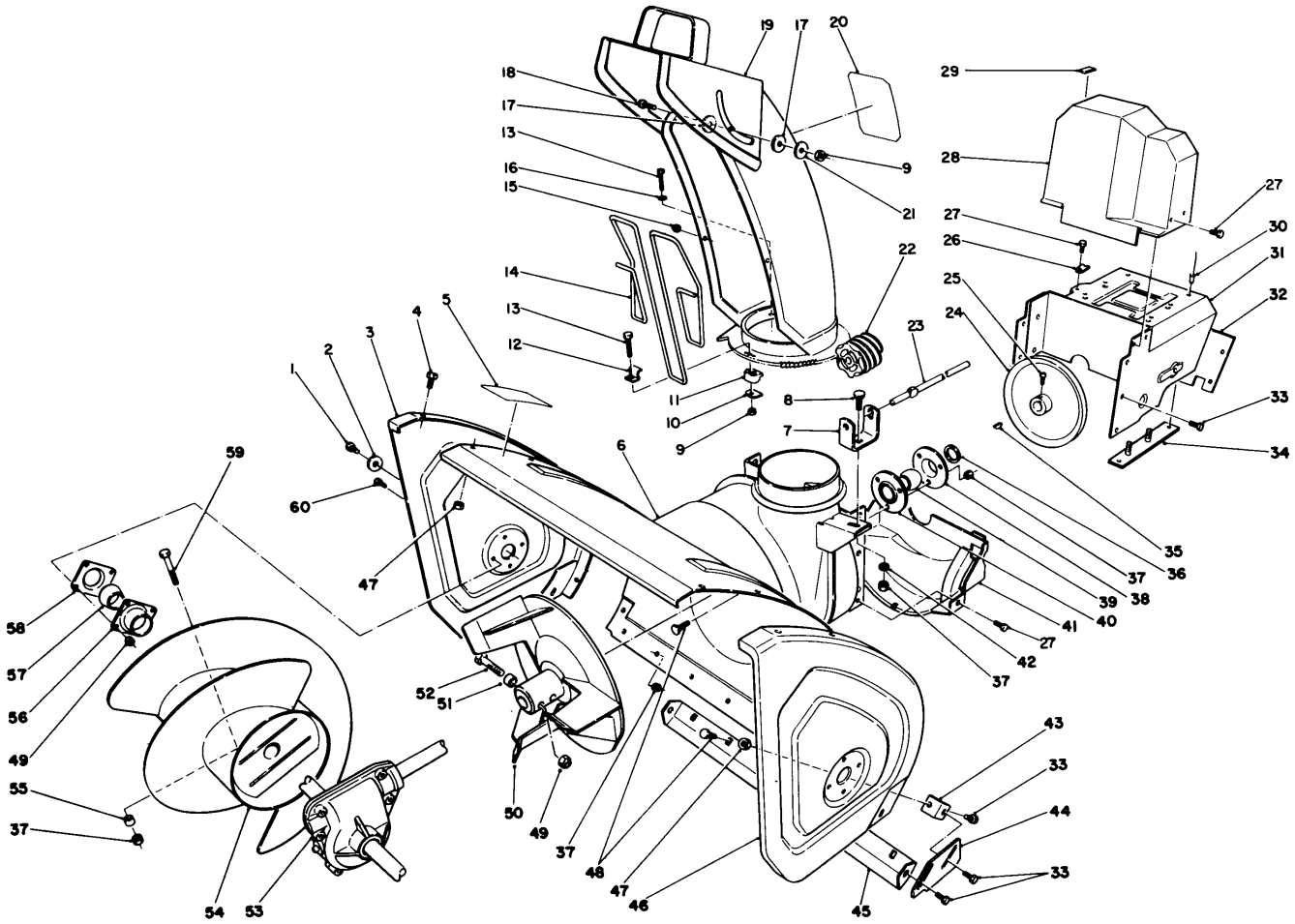

Housing and Chute Assembly

Ref.	Part Number	Qty.	Description
1	323-6	2	Screw-HH
2	3-0750	2	Washer
3	66-7820	1	Plate-Side, RH
4	3234-28	10	Screw-HHF
5	53-7670	1	Decal-Warning, Auger
6	62-0720	1	Housing-24 Inch
7	63-2180	1	Bracket-Worm, Chute
8	3230-2	1	Bolt-CARR
9	3296-2	4	Nut-Lock, NI
10	63-2670	3	Plate-Retainer, Chute
11	62-1430	3	Retainer-Chute
12	63-3130	1	Clip-Guard, Chute
13	3274-13	3	Screw-HSH
14	63-3020	1	Guard-Chute
15	3290-326	2	Nut-Push
16	3256-14	1	Washer-Flat
17	63-2900	2	Washer-Plastic
18	32122-32	1	Screw
19	62-0840	1	Assembly
20	63-3740	1	Decal-Danger
	53-7660	1	Decal-Danger
21	3256-61	1	Washer-Flat
22	62-0820	1	Gear-Worm
23	62-1720	1	Rod-Chute, Lower
24	62-1300	1	Pulley-Impeller
25	3242-4	2	Screw-Set, SQH

● Not illustrated

Ref.	Part Number	Qty.	Description
26	63-2300	1	Retainer-Cable
27	32144-4	6	Screw-HWH
28	63-2080	1	Cover-Belt, Upper
29	63-3290	1	Cover-Cable
30	3269-23	4	Rivet-Pop
31	66-7780	1	Frame-Engine
32	62-1440	1	Cover-Frame, Engine
33	3234-7	12	Screw-HHF
34	68-4070	1	LH Frame Plate ASM
	68-4060	1	LH Frame Plate ASM
35	3257-23	1	Key-Woodruff
36	252-80	1	Washer-Thrust
37	3296-29	12	Nut-Lock, NI
38		1	Flange-Bearing (Rear) ■
39	63-3450	1	Bearing-Ball
40		1	Flange-Bearing (Front) ■
41	62-1400	1	Cover-Belt (Lower)
42	3256-23	1	Washer-Flat
43	62-1240	2	Bracket-Skid
44	62-0980	1	Plate-Skid LH
	62-0990	1	Plate-Skid RH ●
45	66-7762	1	Blade-Scraper
46	66-7830	1	Plate-Side LH
47	3296-47	12	Nut-Lock, NI
48	3230-23	9	Screw-CARR
49	3296-42	10	Nut-Lock, NI

■ Not serviced separately

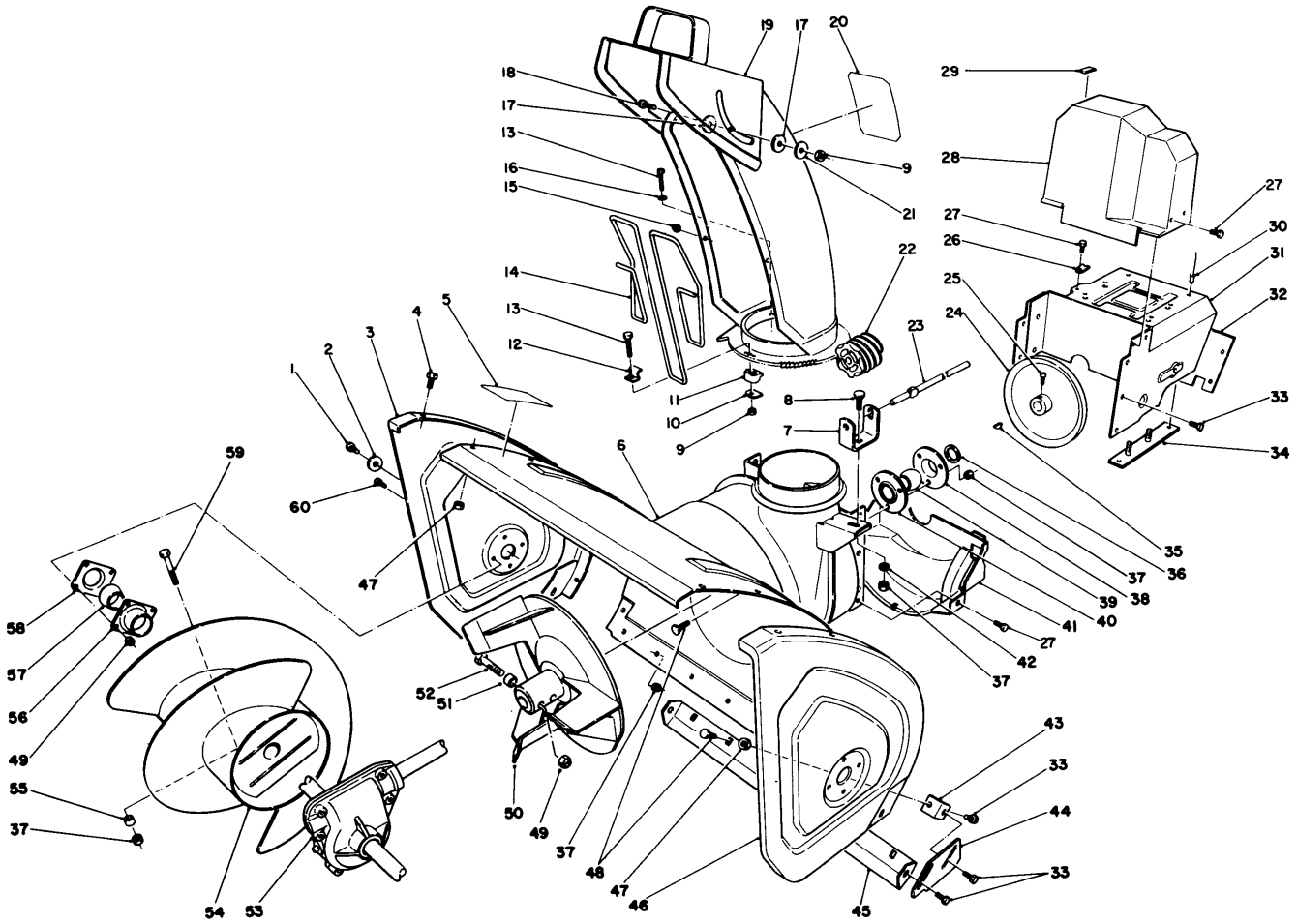

Housing and Chute Assembly (continued)

Ref.	Part Number	Qty.	Description
50	66-7910	1	Impeller
51	66-8010	2	Spacer-Hub, Impeller
52	321-44	2	Screw-HHF
53	66-8020	1	Auger Gearbox ASM
54	63-2750	1	Auger-RH
	63-2760	1	Auger-LH ●
	68-7450	1	Auger-RH ●
	68-7460	1	Washer ●

Ref.	Part Number	Qty.	Description
55	25-5090	2	Spacer-Hub, Auger
56	20-0990	2	Bearing-Flange, Front
57	20-0980	2	Bearing
58	20-1000	2	Bearing-Flange, Rear
59	17-7030	2	Auger Bolt
60	321-3	8	Screw-HH
	12-8789	1	Impeller Bearing ASM (Incl. Ref. #38-40) ●

● Not illustrated

■ Not serviced separately

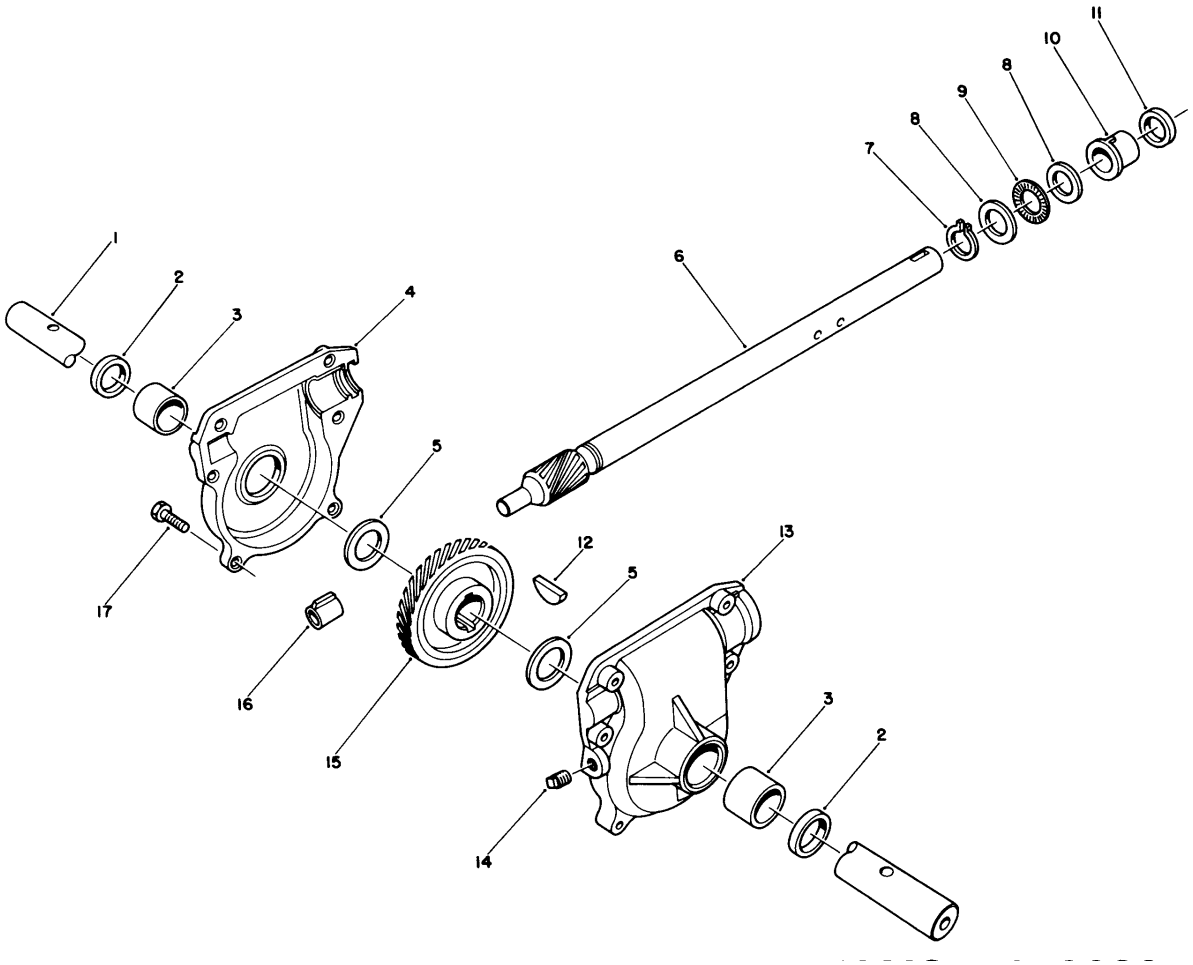

24 Inch Gear Case Assembly

Ref.	*Part Number*	*Qty.*	*Description*
1	62-1530	1	Shaft-Auger
2	7-0045	2	Seal-Oil
3	256-237	2	Bushing
4	62-0570	2	RH Gearcase ASM (Incl. Ref. # 2-3)
5	252-71	2	Washer-Thrust
6	66-7810	1	Shaft-Impeller
7	32151-33	1	Ring-Retaining, EXT
8	252-78	2	Washer-Thrust
9	252-76	1	Bearing-Thrust
10	37-6560	1	Bushing-Input
11	253-149	1	Seal-Oil
12	3257-10	1	Key-Woodruff
13	62-0580	1	LH Gearcase ASM (Incl. Ref. #2-3)
14	281-1	1	Plug-Pipe, SQH
15	62-0120	1	Gear-Helical
16	62-1150	1	Bushing-Worm
17	32144-86	6	Screw-HWHTF

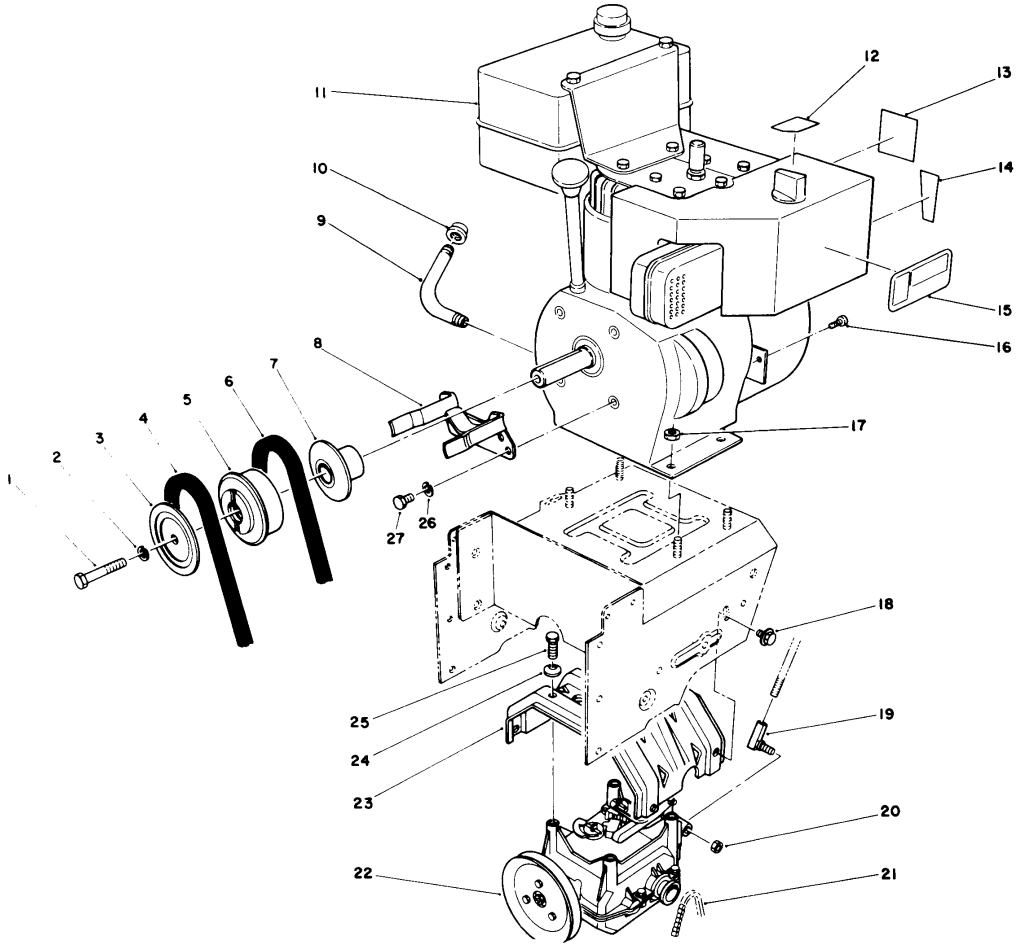

Engine Assembly

Ref.	Part Number	Qty.	Description
1	3211-9	1	Screw-HH
2	3253-21	1	Washer-Lock
3	63-3320	1	Sheave Half-Impeller
4	63-2961	1	V-Belt
5	63-3310	1	Center Engine Pulley
6	63-2951	1	V-Belt-Traction
7	63-3300	1	Sheave-Traction Half
8	68-7510	1	Guide-Belt
9	67-9290	1	Tube-Drain
10	288-9	1	Cap-Pipe
11		1	Engine-Tecumseh Model No. H60 Type No. 75504W ■
12	63-2420	1	Decal-Choke
	63-2430	1	Decal-Choke, Int'l ●
13	62-5760	1	Decal-Primer
14	63-3190	1	Decal-Throttle
15	62-7290	1	Decal-Hot
	63-2310	1	Decal-Hot Surface, Warning ●
16	32144-4	1	Screw-HWH
17	32128-20	4	Nut-HF
18	3234-7	4	Screw-HHF
19	63-2640	1	Joint-Ball
20	3296-17	1	Nut-Lock, NI
21	63-2940	1	Chain
22	66-8030	1	Traction Gearcase ASM
23	63-2990	1	Frame-Transmission
24	3290-461	4	Washer-Spring
25	11-0590	4	Screw-HWHTF
26	3253-4	2	Washer-Lock
27	3210-1	2	Screw-HH

● Not illustrated

■ Not serviced separately

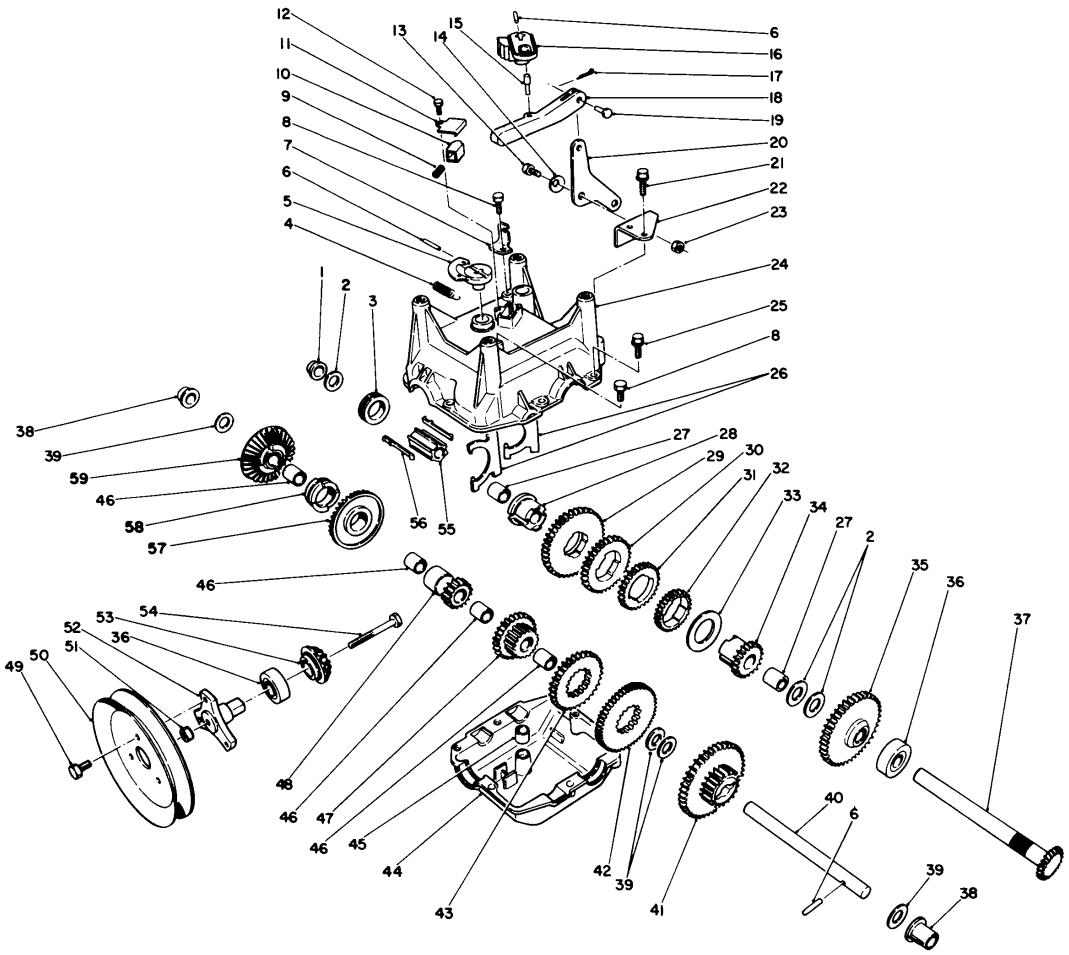

Transmission Assembly No. 66-8030

Ref.	Part Number	Qty.	Description
1	62-1180	1	Bushing-Flange, Output
2	252-59	3	Bearing-Thrust
3	62-0430	1	Collar-Shift
4	63-2920	1	Spring-Extension
5	62-0880	1	Lever
6	32121-106	3	Pin-Spring
7	62-1740	1	Bracket-Cable
8	32144-4	2	Screw-HWH
9	63-2890	1	Spring-Detent
10	62-1020	1	Button-Detent
11	62-1690	1	Cover-Detent
12	32104-71	1	Screw-HWH
13	63-3410	1	Screw-Shoulder
14	3290-477	1	Washer-Curved
15	63-2190	1	Pin-Link, Gear Shift
16	62-0870	1	Lever-Shift, Gear
17	3272-1	1	Pin-Cotter
18	62-0860	1	Link-Shift, Gear
19	283-3	1	Pin-Clevis
20	63-2600	1	Bellcrank
21	32104-95	2	Screw-HWH
22	62-1190	1	Bracket-Bellcrank
23	3296-42	1	Nut-Lock, NI
24	62-0490	1	Gearcase-Upper, Casing
25	32144-86	6	Screw-HWHTF
26	62-1040	2	Yoke-Shift
27	62-1350	2	Bushing-Output
28	62-0320	1	Sleeve-Gear

Ref.	Part Number	Qty.	Description
29	62-0240	1	Gear-45 T
30	62-0220	1	Gear-34 T
31	62-0200	1	Gear-27 T
32	62-0250	1	Gear-29 T
33	63-2280	1	Washer-Thrust
34	62-0340	1	Gear-Sleeve, 19 T
35	62-0370	1	Gear-41 T
36	38-7820	2	Bearing-Ball
37	62-1080	1	Shaft-Output
38	62-1170	2	Bushing-Intermediate
39	257-10	4	Washer-Thrust
40	62-0330	1	Shaft-Intermediate
41	62-0360	1	Gear-19/41 T
42	62-0260	1	Gear-51 T
43	62-0210	1	Gear-33 T
44	62-0480	1	Gearcase-Lower, Casing
45	29-9570	1	Bushing-Yoke
46	62-1160	4	Bushing-Output
47	68-4310	1	Gear-26 T
48	62-0500	1	Gear-Bevel, 15 T
49	12-3270	3	Screw
50	62-1310	1	Traction-Sheave, Half
51	32128-32	1	Nut-HHF
52	62-0380	1	Hub-Pulley
53	62-0350	1	Pinion-Bevel
54	321-15	1	Screw-HH
55	68-4320	1	Sleeve-Shift
56	62-0310	2	Key-Shift

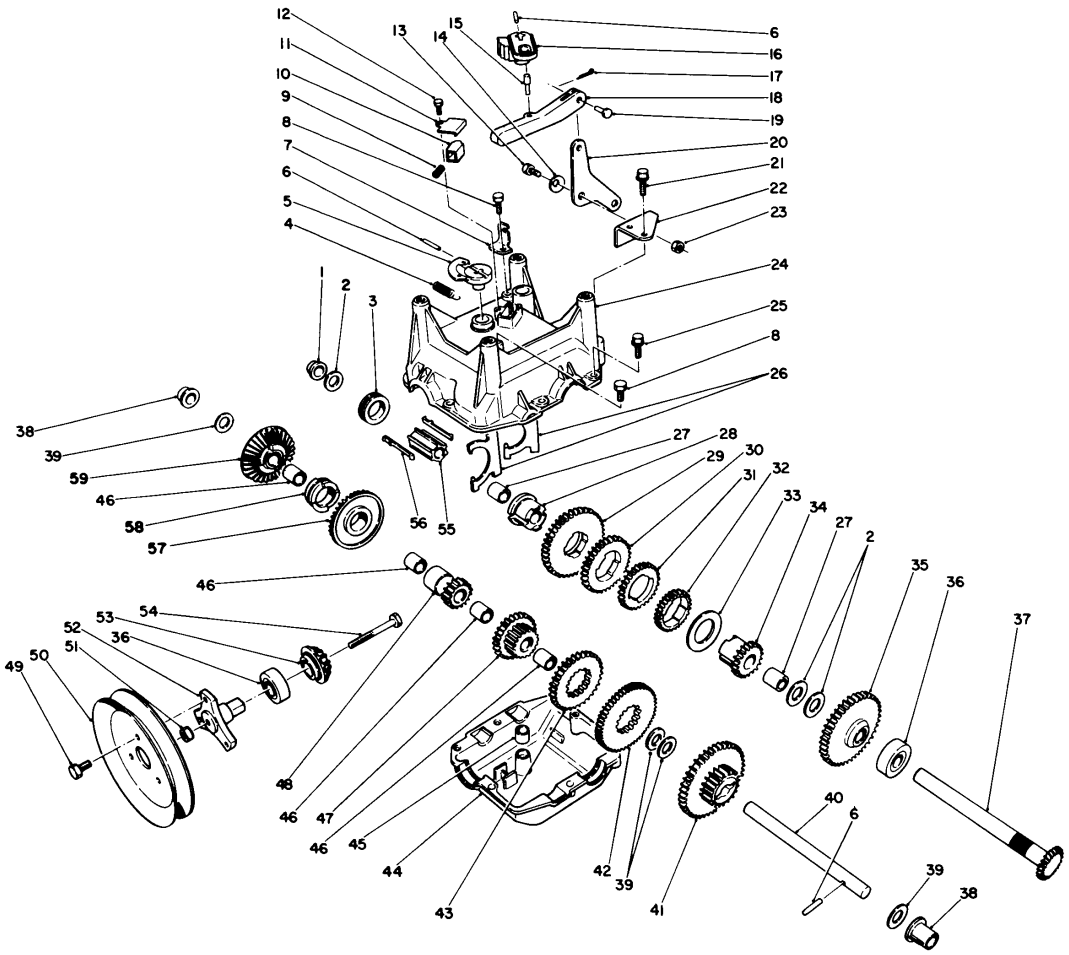

Transmission Assembly No. 66-8030 (continued)

Ref.	Part Number	Qty.	Description
57	67-5870	1	Gear-Bevel, 36 T
58	67-5880	1	Collar-Shift
59	67-5860	1	Gear-Bevel, Rev, 36 T

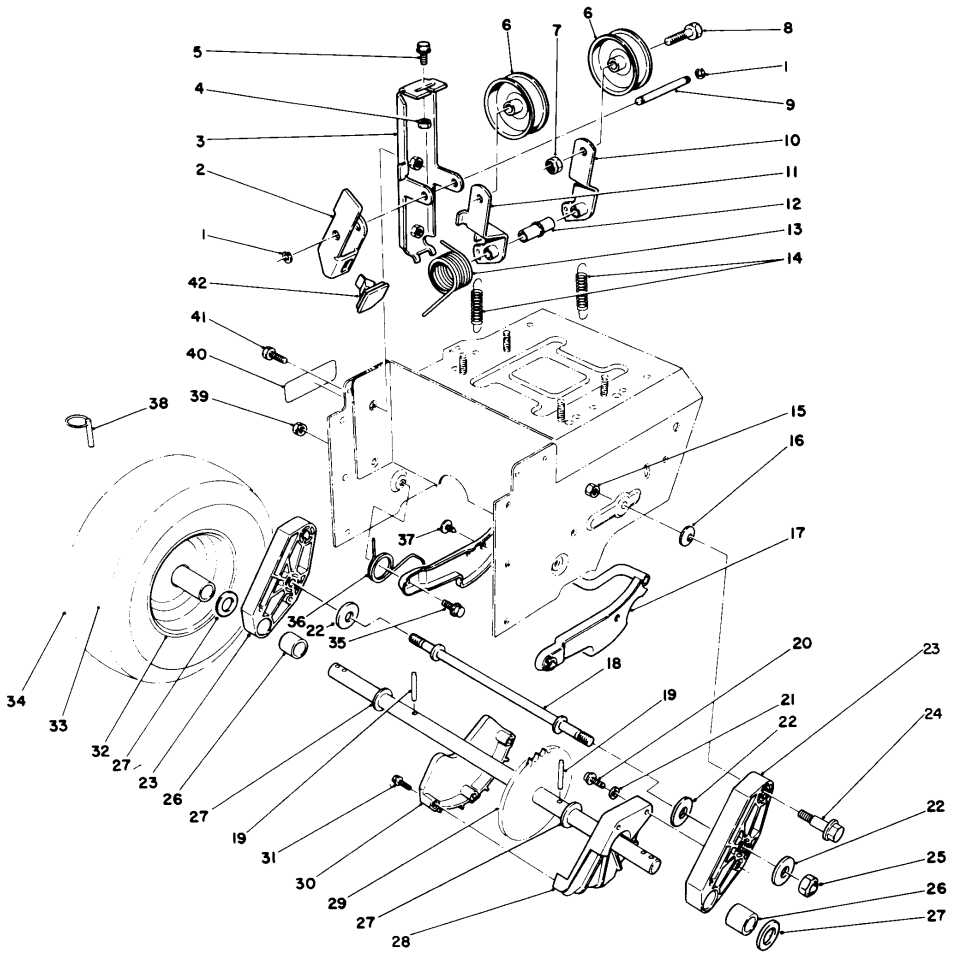

Traction Drive Assembly

Ref.	Part Number	Qty.	Description
1	32120-46	2	Ring-Retaining
2	63-2810	1	Arm-Brake
3	63-2850	1	Idler Arm Bracket ASM
4	3296-42	1	Nut-Lock, NI
5	3234-13	1	Screw-HHF
6	3-4244	2	Pulley-Idler
7	3296-59	2	Nut-Lock, NI
8	323-7	2	Screw-HH
9	62-0970	1	Pin-Idler
10	62-1260	1	Arm-Idler, Traction
11	62-1280	1	Arm-Idler, Impeller
12	62-1210	1	Bushing-Idler
13	63-2880	1	Spring-Torsion
14	63-2870	2	Spring-Extension
15	3296-39	2	Nut-Lock, NI
16	3290-461	2	Washer-Spring
17	62-0470	1	Latch-Arm
18	66-7720	1	Rod-Latch
19	32121-9	2	Pin-Roll, Slotted
20	32144-4	2	Screw-HWH
21	3256-1	2	Washer-Flat
22	63-3340	4	Washer-Support
23	66-7740	2	Pivot Arm ASM (Incl. Ref. #26)
24	62-1330	2	Bolt-Shoulder
25	3296-23	2	Nut-Lock, NI
26	63-2250	2	Bushing-Axle
27	252-80	4	Washer-Thrust
28	62-1010	1	Guard-Chain, LH
29	63-2111	1	Axle ASM
30	62-1000	1	Guard-Chain, RH
31	32104-118	3	Screw-PPH
32	241-128	2	Wheel
33	232-46	2	Tube
34	231-120	2	Tire
35	5-2490	2	Screw-Shoulder
36	63-2740	1	Spring-Latch, Torsion
37	3290-476	1	Fastener-Panel
38	3290-243	2	Pin-Lynch
39	3296-47	2	Nut-Lock, NI
40	63-3460	1	Decal-Warning
	63-3470	1	Decal-Warning ●
41	3234-7	2	Screw-HHF
42	66-8060	1	Pad-Brake
	67-9220	1	Wheel And Tire ASM (Incl. Ref. #32-34) ●
	56-2700	1	Chains-Tire ●

● Not illustrated

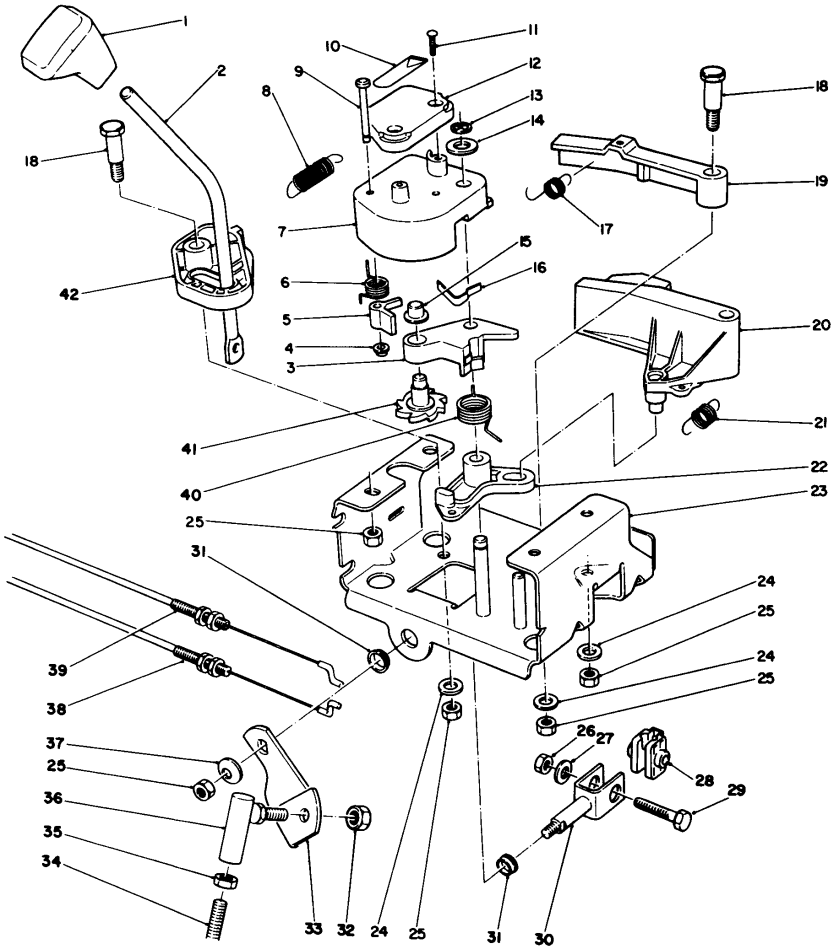

Traction Linkage Assembly

Ref.	Part Number	Qty.	Description
1	62-1290	1	Knob-Shift
2	67-9240	1	Rod-Shift
3	62-1110	1	Lever-Wheel, Index
4	3290-422	1	Nut-Push
5	62-0180	1	Tang-Index
6	62-1650	1	Spring-Torsion
7	62-1100	1	Latch-Lever
8	63-2220	1	Spring-Extension
9	63-2610	1	Pin-Tang
10	63-2480	1	Decal
11	32104-118	2	Screw-PPH
12	62-1140	1	Cover-Latch
13	32120-46	1	Ring-Retaining
14	257-9	1	Washer-Thrust
15	3290-320	1	Retainer-Push On
16	62-1710	1	Spring-Flat
17	63-2240	1	Spring-Extension
18	63-2650	2	Screw-Shoulder
19	62-1700	1	Lever-Lockout
20	62-1130	1	Lever-Reverse
21	63-2230	1	Spring-Extension

Ref.	Part Number	Qty.	Description
22	62-1120	1	Lever-Reverse, Switch
23	63-2150	1	Frame-Control
24	3256-23	3	Washer-Flat
25	3296-29	7	Nut-Lock, NI
26	3296-42	1	Nut-Lock, NI
27	3256-1	1	Washer-Flat
28	67-9250	1	Retainer-Rod, Shift
29	321-43	1	Capscrew
30	66-7730	1	Clevis ASM
31	256-296	2	Bushing
32	3296-17	1	Nut-Lock, NI
33	63-2630	1	Bracket-Shift
34	63-2830	1	Rod-Bent Shift, Lower
35	3220-3	2	Nut-HJ
36	63-2640	1	Joint-Ball
37	3290-456	1	Washer-Belleville
38	63-2210	1	Cable-Gearbox
39	63-2200	1	Cable-Arm, Latch
40	63-2270	1	Spring-Torsion
41	62-0170	1	Wheel-Index
42	62-1470	1	Base-Lockout

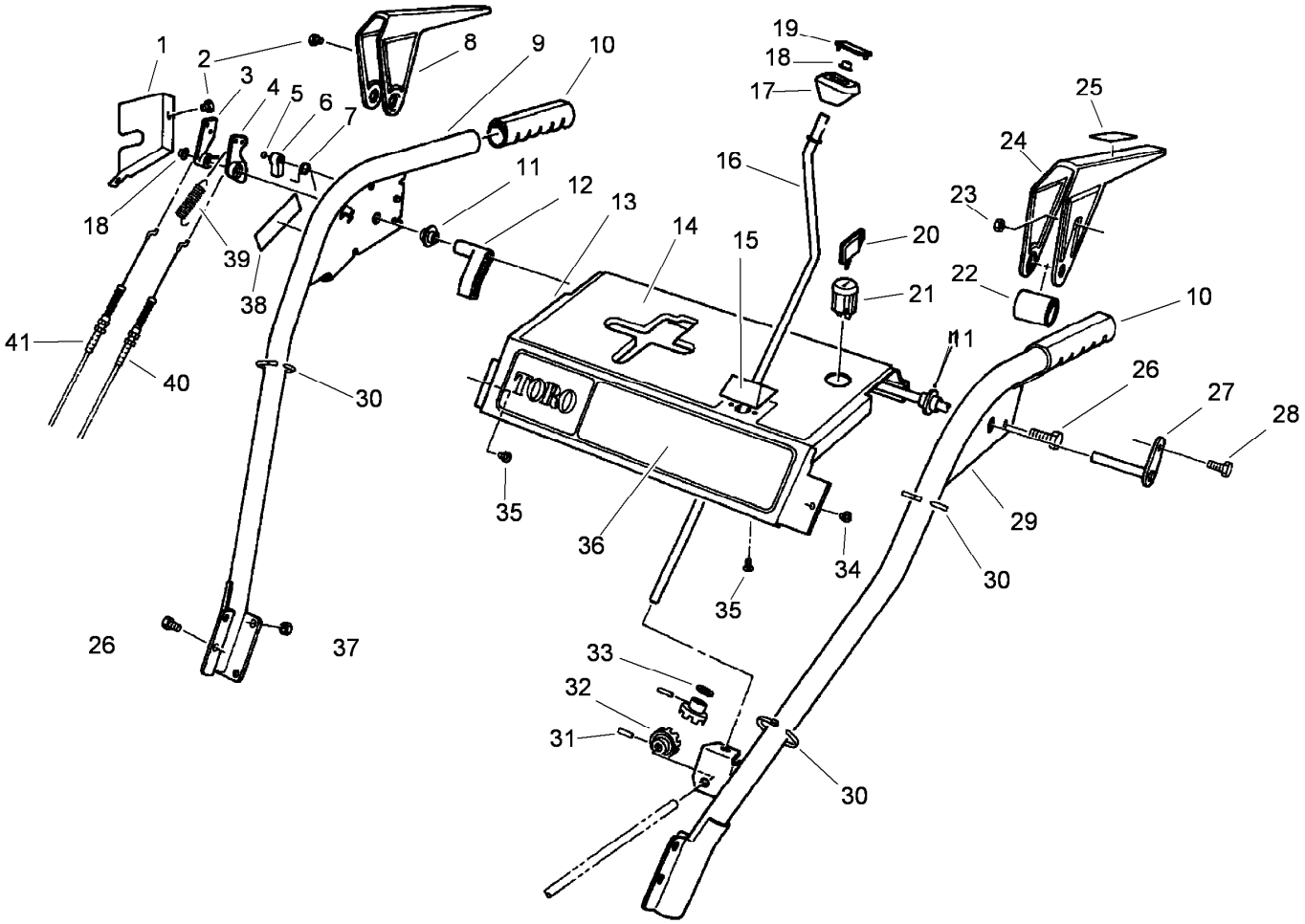

Handle Assembly

Ref.	Part Number	Qty.	Description
1	63-2170	1	Cover Lever Lock
2	2210-250	3	Screw-HH
3	62-0300	1	Tang-Locking
4	62-0290	1	Cam-Release
5	32151-66	1	E-Ring-Retainer
6	62-0280	1	Latch-Locking
7	63-2910	1	Spring-Torsion
8	62-1050	1	Lever-Impeller
9	62-1380	1	Handle-RH
10	66-7850	2	Grip-Handle
11	62-1070	2	Bushing-Lever
12	62-1640	1	Lever-Trip
13	66-8100	1	Panel-Control
14	63-2540	1	Decal-Panel, Top
	63-2550	1	Decal-Panel, Top ●
15	62-1490	1	Plate-Guide
16	63-2160	1	Crank-Rod, Chute
17	62-1320	1	Knob-Control, Chute
18	3290-320	2	Retainer-Push On

Ref.	Part Number	Qty.	Description
19	62-1520	1	Cover-Knob
20	62-7770	1	Key-Ignition
21	40-5940	1	Switch
22	3296-2	1	Nut-Lock, NI
23	62-1060	1	Lever-Traction
24	63-3380	1	Spacer-Lever, Traction
25	63-3050	1	Decal-Lever
26	3234-7	6	Screw-HHF
27	63-2030	1	Cross Rod ASM
28	3290-359	1	Screw-HWH
29	66-8090	1	Handle-LH
30	3290-378	3	Tie-Cable
31	32121-50	2	Pin-Spring
32	62-1460	2	Gear-Universal
33	62-1230	1	Washer-Rubber
34	32104-76	2	Screw
35	32104-118	2	Screw-PPH
36	63-2500	1	Decal-Front Panel
37	3296-47	4	Nut-Lock, NI

● Not illustrated

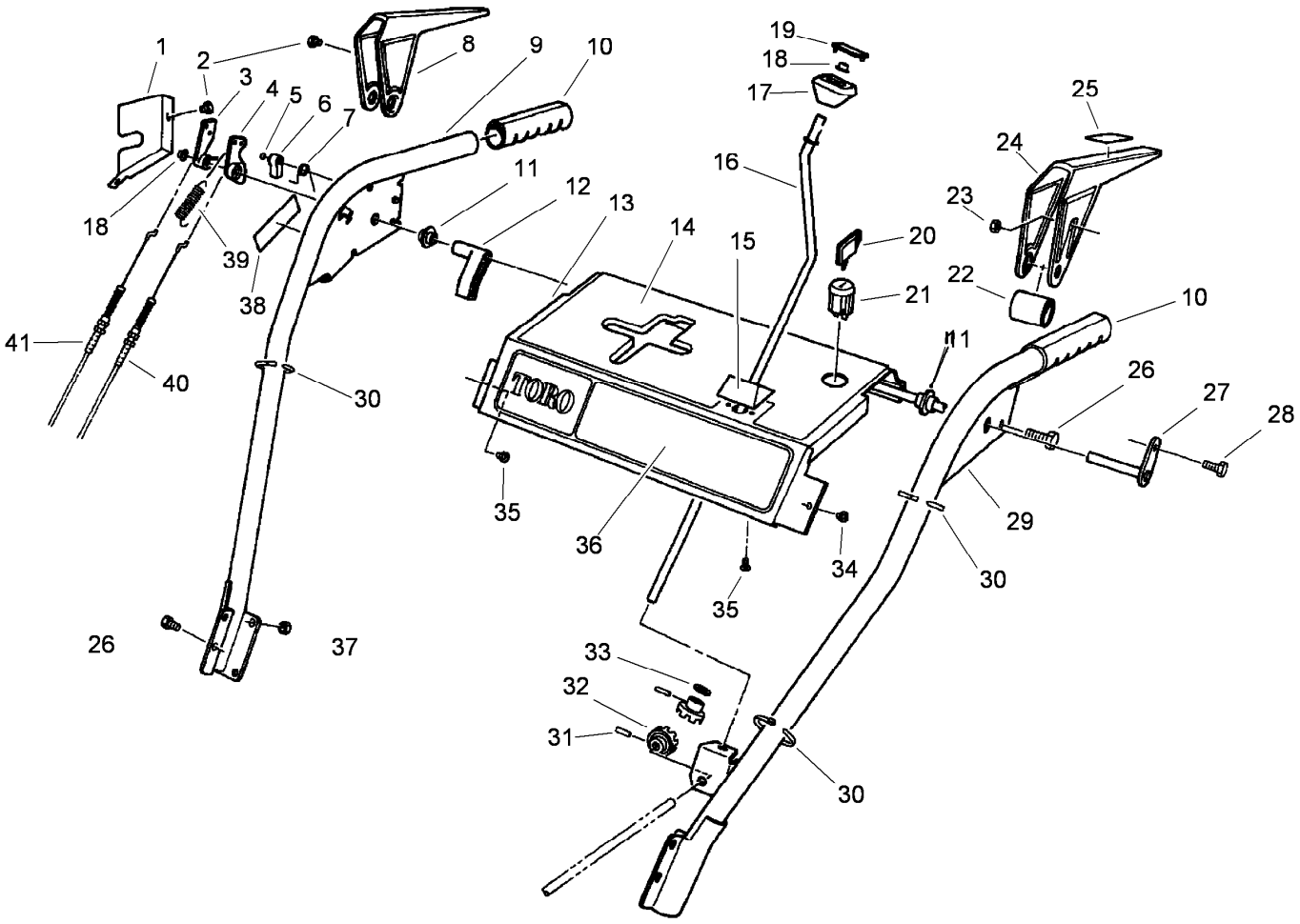

Handle Assembly (continued)

Ref.	Part Number	Qty.	Description
38	63-3460	1	Decal-Warning
	63-3470	1	Decal-Warning ●
39	63-2720	1	Spring-Extension
40	63-2710	1	Cable-Traction
41	63-2700	1	Cable-Impeller
	63-3420	1	Harness-Wiring ●

● Not illustrated

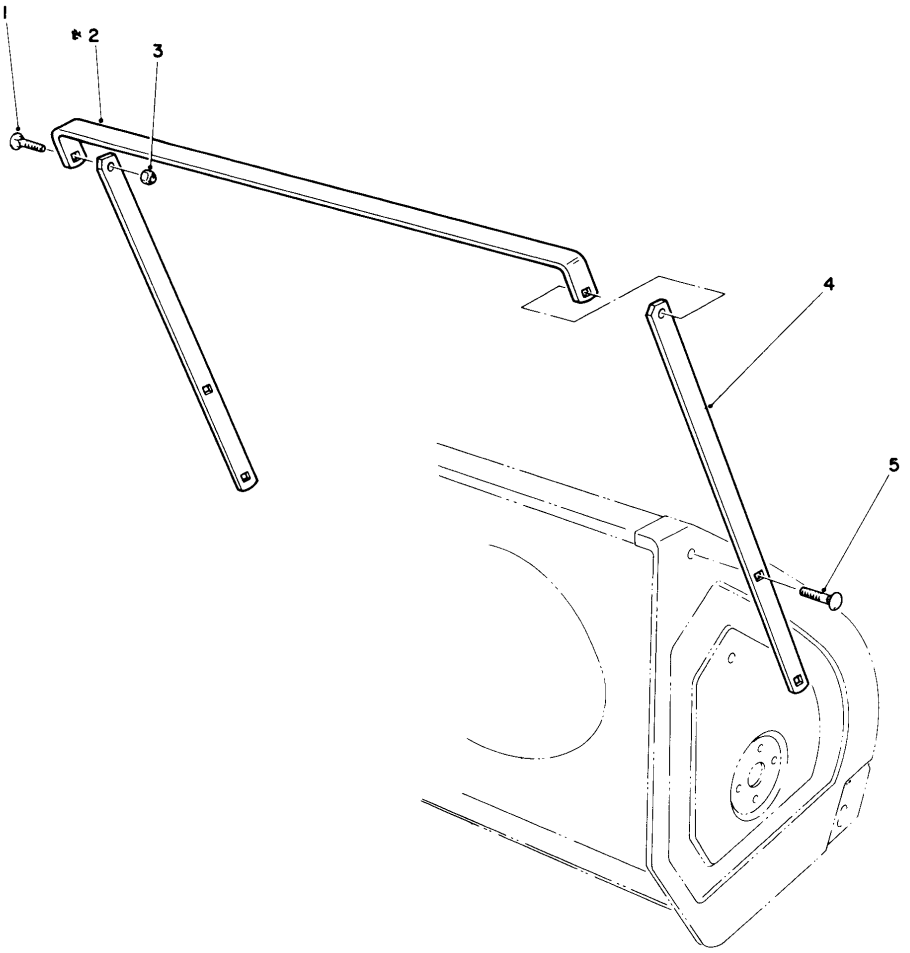

Drift Breaker Assembly No. 66-7960 (optional)

Ref.	*Part Number*	*Qty.*	*Description*
1	3230-16	2	Screw-CARR
2	68-7180	1	Breaker-Top, 24 Inch
3	3296-29	6	Nut-Lock, NI
4	68-7170	2	Breaker-Side
5	3230-1	4	Bolt-CARR

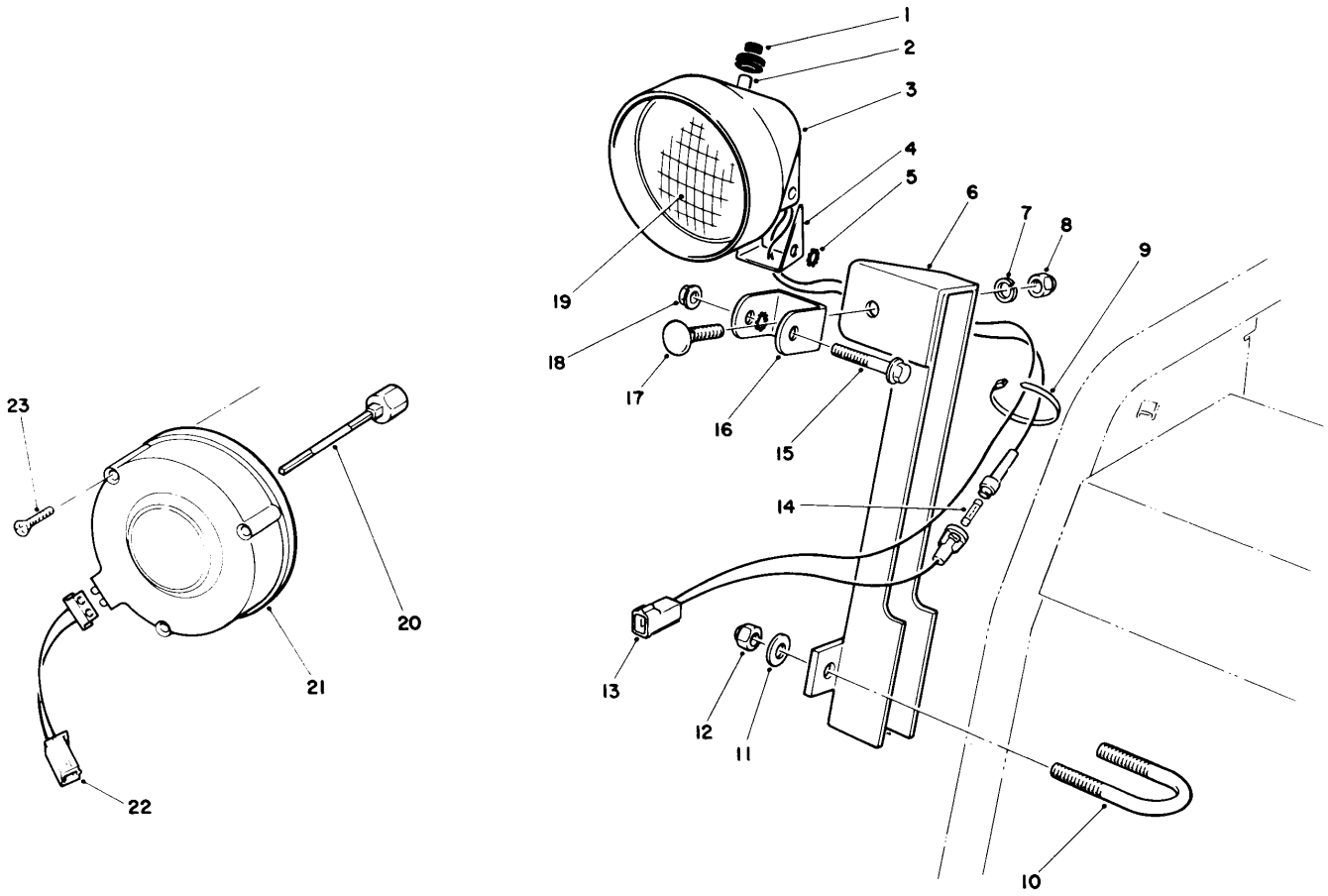

Light Kit No. 66-7930 (optional)

Ref.	Part Number	Qty.	Description
1	218-473	1	Boot-Switch
2	218-553	1	Switch ASM
3	218-552	1	Bucket-Headlamp
4	218-554	1	To Be Discontined-Not Needed On Product
5	3255-8	2	Washer-Lock
6	68-7110	1	Mount-Lamp
7	3253-21	1	Washer-Lock
8	3217-7	1	Nut-Hex
9	3290-378	2	Tie-Cable
10	68-7140	1	U-Bolt
11	3256-23	2	Washer-Flat
12	3296-29	2	Nut-Lock, NI
13	218-555	1	Wire ASM
14		1	Fuse-7-1/2 Amp. ■
15	322-13	1	Screw-HH
16	218-556	1	Bracket
17	3231-2	1	Screw-CARR
18	32128-35	1	Nut-HF
19	218-16	1	Beam-Sealed
20	2210-268	1	Shaft-Alternator, 3 Inch
	2210-269	1	Shaft-Alternator, 4 Inch ●
21	2210-274	1	Alternator
22	2210-272	1	Connector-Wire
23	2210-273	3	Self TAP Screw
	2210-270	1	Tube-Centering ●
	2210-271	1	Tube-Centering, 4 Inch ●
	54-9871	1	Headlamp ASM (Incl. Ref. #1-5, 7, 8 & 13-19) ●

● Not illustrated

■ Not serviced separately

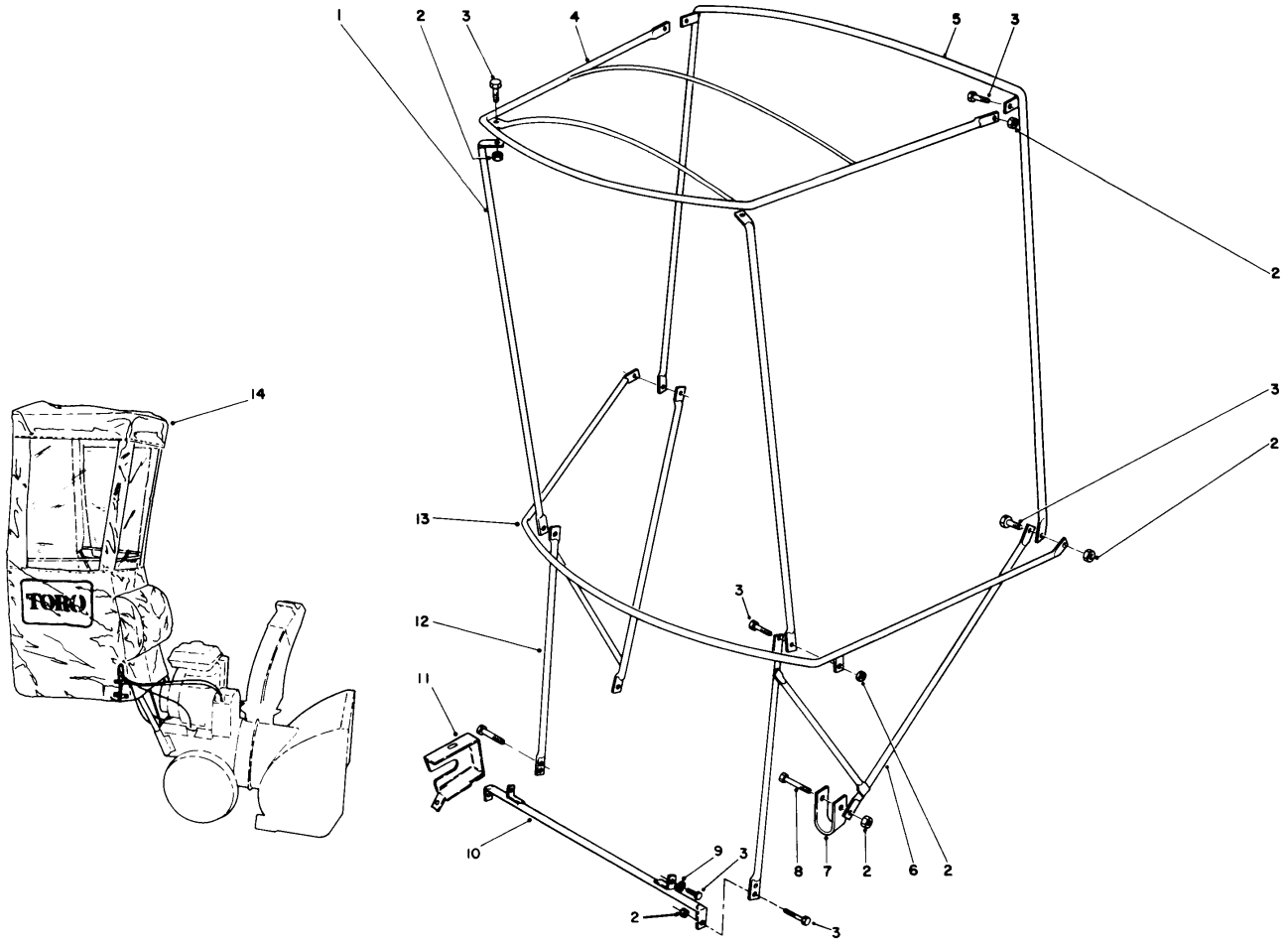

Snow Cab Assembly No. 66-6200 (optional)

Ref.	*Part Number*	*Qty.*	*Description*
1	12-8040	2	Post
2	32153-4	14	Nut-Hex, Side Deform
3	321-4	12	Screw-HH
4	12-8010	1	Frame-Top
5	12-8030	1	Bow-Vertical, Rear
6	66-6230	1	Bracket-LH
7	66-6240	2	Clamp
8	321-11	2	Screw-HH
9	3256-58	2	Washer-Flat
10	66-6210	1	Bracket-Base
11	63-3330	1	Cover-Lock, Lever
12	66-6220	1	Bracket-RH
13	12-8020	1	Bow-Curved
14		1	Cover-Vinyl ●

● Not serviced separately

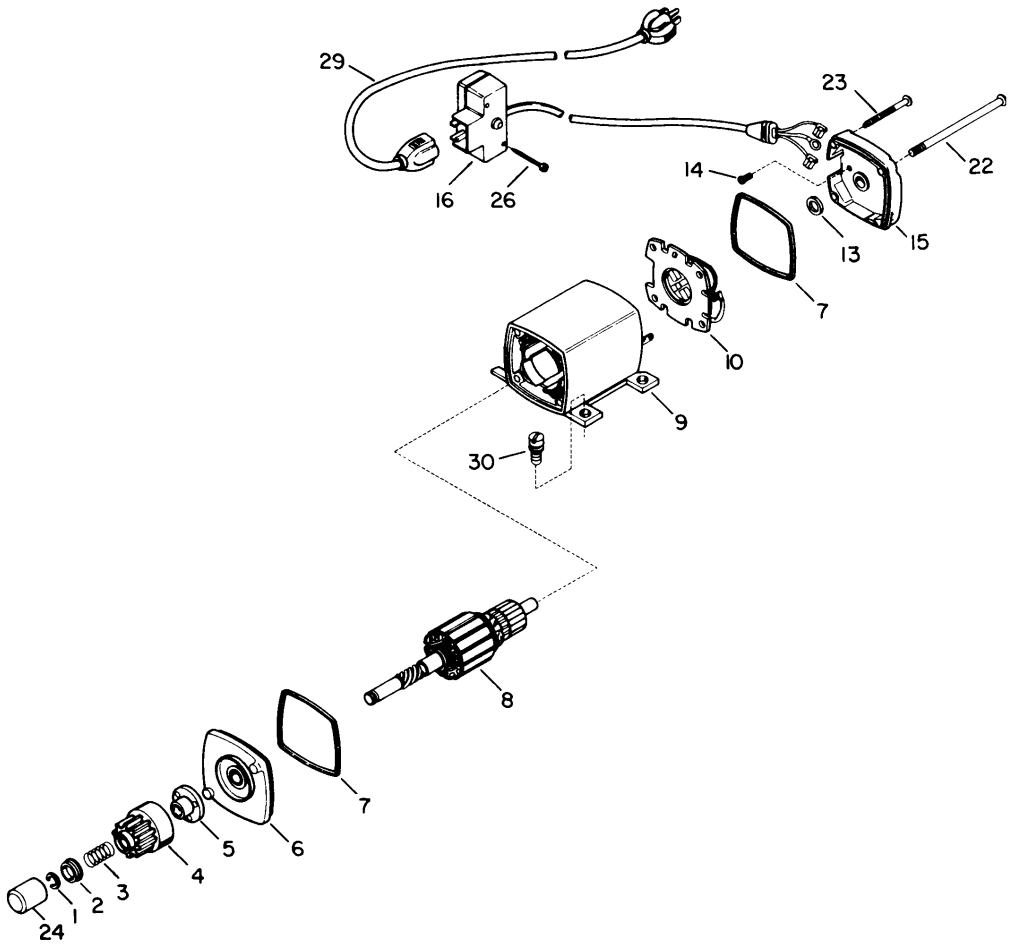

Electric Starter Motor Kit No. 38-7590 (optional)

Ref.	*Part Number*	*Qty.*	*Description*
1	33842	1	Ring-Retainer
2	33430	1	Retainer-Spring
3	33431	1	Spring-Anti Drift
4	33432	1	Gear
5	33433	1	Nut-Engaging
6	35449	1	Drive End Cap ASM (Incl. Ref. #7)
7	35450	2	O-Ring
8	33436A	1	Armature
9	35457	1	Housing ASM
10	35452	1	Card ASM
13	590500	1	Washer-Thrust
14	33441	1	Screw-Ground
15	35453	1	Commutator End Cap ASM (Incl. Ref. #7)
16	35454	1	Switch Box ASM
22	35455	2	Bolt-Case
23	35456	1	Screw-Ground
24	33451	1	Cover-Dust
26	650819	2	Screw
29	32450A	1	Cord-Extension
30	30063	2	Screw

Engine Tecumseh Model No. H60-75504w

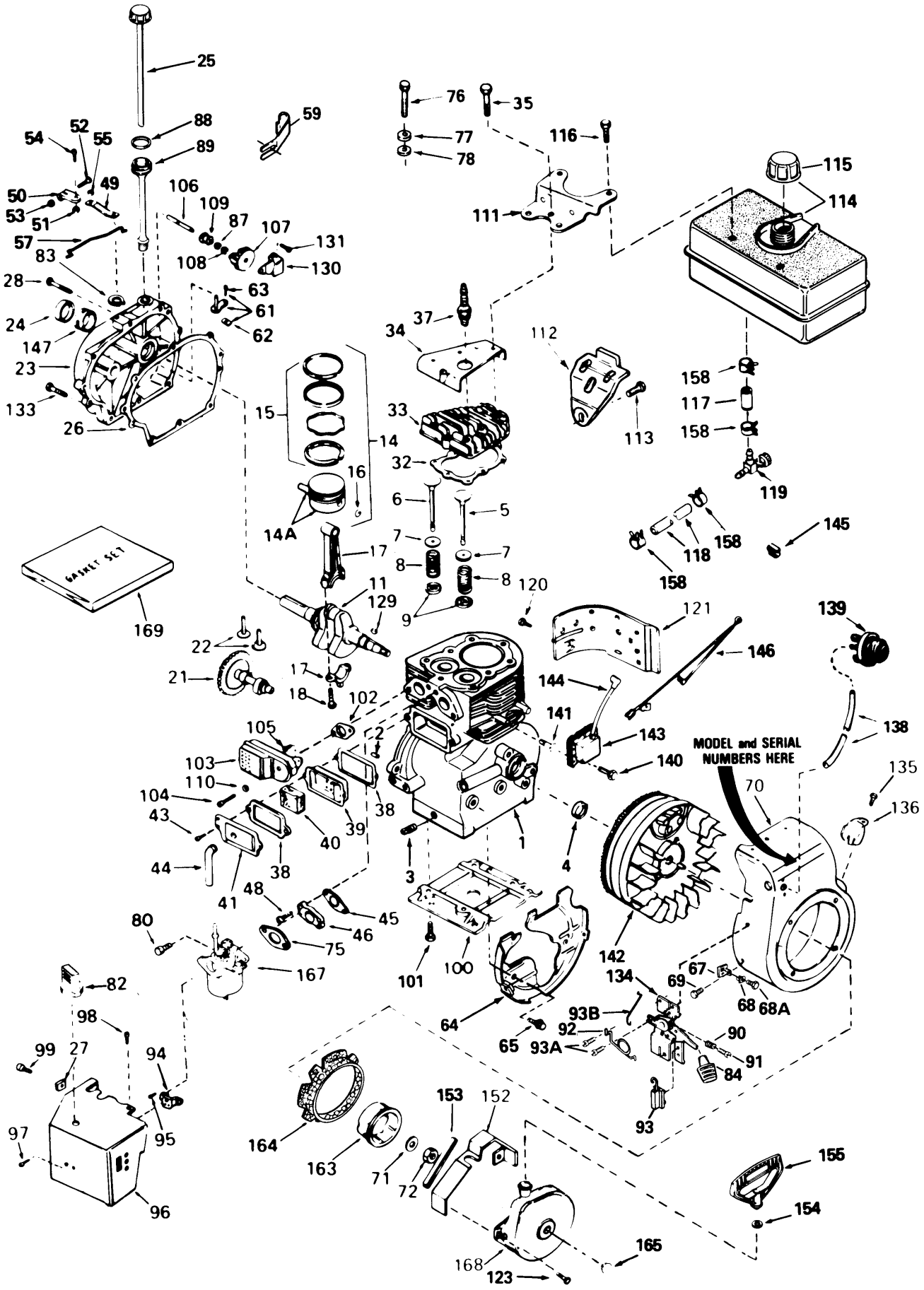

Engine Tecumseh Model No. H60-75504w (continued)

Ref.	Part Number	Qty.	Description
1	34919A	1	Cylinder (Incl. Ref. #2-4)
2	27652	2	Pin-Dowel
3	27642	1	Plug-Drain, Oil (SQH 1/4-18)
4	32630	1	Oil Seal
5	32783	1	Valve-Intake (Std.)(Incl. Ref. #9)
	32784	1	Valve-Intake (.03" Os.)(Incl. Ref. #9) ●
6	27878A	1	Valve-Exhaust (Std.)(Incl. Ref. #9)
	27880A	1	Valve-Exhaust (.03" Os.)(Incl. Ref. #9) ●
7	27882	1	Cap-Spring, Valve
8	27881	2	Spring-Valve
9	32581	2	Keeper-Spring, Valve
11	35562	1	Crankshaft
14	34531	1	Piston Pin And Ring ASM (Std.)(Incl. Ref. #14A-16)
	34532	1	Piston Pin And Ring ASM (.01" Os.)(Incl. Ref. #14A-16) ●
	34533	1	Piston Pin And Ring ASM (.02" Os.)(Incl. Ref. #14A-16) ●
14A	33312B	1	Piston And Pin ASM (Std.)(Incl. Ref. #16)
	33313B	1	Piston And Pin ASM (.01" Os.)(Incl. Ref. #16) ●
	33314B	1	Piston And Pin ASM (.02" Os.)(Incl. Ref. #16) ●
15	34854	1	Ring Set (Std.)
	34855	1	Ring Set (.020" Os) ●
	34856	1	Ring Set (.010" Os) ●
16	27888	2	Ring-Retaining, Piston Pin
17	31380C	1	Connecting Rod ASM (Incl. Ref. #18)
18	650662C	2	Bolt-Connecting Rod
21	32115	1	55012A Gil Snwthwr
22	34034	2	Lifter-Valve
23	31303B	1	Cylinder Cover ASM (Incl. Ref. #24, 106 & 147)
24	28427	1	Oil Seal
25	35555	1	Dipstick
26	30684	1	Gasket-Cover, Cylinder
27	650764	1	Nut-U Type
28	650488	7	Screw (1/4-20 X 1-1/4)
32	28938B	1	Gasket-Head, Cylinder
33	30938A	1	Head-Cylinder (Incl. 3 Ref. #35)
34	30939A	1	Cover-Head, Cylinder
35	650697A	8	Screw (5/16-18 X 2-1/2)
37	35395	1	Spark Plug-Resistor (R J19 L M)
38	27896	2	Gasket-Breather
39	28423	1	Body-Breather
40	28424	1	Element-Breather
41	28425	1	Cover-Valve
43	650128	2	Screw
44	35350	1	Tube-Breather
45	27915	1	Gasket-Intake
46	34712	1	Flange-Carburetor (Incl. Ref. #80)
48	30196	2	Screw
49	33454	1	Lever-Governor
50	29916	1	Clamp-Lever, Governor
51	30322	1	Nut-Lock
52	29826	1	Screw
53	29216	1	Nut-Lock
54	650548	1	Screw
55	29918	1	Washer-Lock
57	34661	1	Governor Link
59	35540	1	Clip-Tube, Fill
61	30699C	1	Governor Rod ASM (Incl. Ref. #62-63)
62	30700	1	Yoke-Governor
63	650494	1	Screw (6-40X5/16)
64	35326	1	Baffle-Blower Housing
65	650561	2	Screw (1/4-20X19/32)
67	34126	1	Bracket
68	28545	1	Grommet
68A	650760	1	Screw (8-32 X 3/8)
69	29747B	2	Screw
70	35260	1	Blower Housing ASM (Incl. Ref #135-136)
71	650815	1	Washer-Belleville
72	650871	1	Flywheel Nut
75	31688	1	Gasket-Carburetor
76	650697A	1	Screw (5/16-18 X 2-1/2)
77	650690	1	Washer-Belleville
78	650691	1	Washer-Flat
80	650517	2	Screw (T-30, 1/4-20 X 27-32)
82	35439	1	Knob-Choke
83	29642	1	Ring-Retaining
84	35440	1	Knob-Control
87	30590A	1	Washer-Flat
88	35499	1	O-Ring
89	35554	1	Tube-Fill, Oil
90	31342	1	Spring-Compression
91	650549	1	Screw
92	34663	1	Spring-Throttle
93	610973	1	Terminal
93A	650821	2	Screw (10-32 X 1/2)
93B	34662	1	Link-Throttle
94	32398	1	Bracket-Choke
95	28820	2	Screw (10-32 X 1/2)
96	35060	1	Carburetor Cover
97	650257	2	Screw (8-32 X 5/16)
98	650765	1	Screw (10-32X1/2)
99	650760	1	Screw (8-32 X 3/8)
100	29538	1	Base Engine
101	650542	4	Screw
102	27930	1	Gasket Exhaust
103	32401	1	Muffler
104	650694A	1	Screw (5/16-18 X 2)
105	30196	1	Screw

● Not illustrated

Engine Tecumseh Model No. H60-75504w (continued)

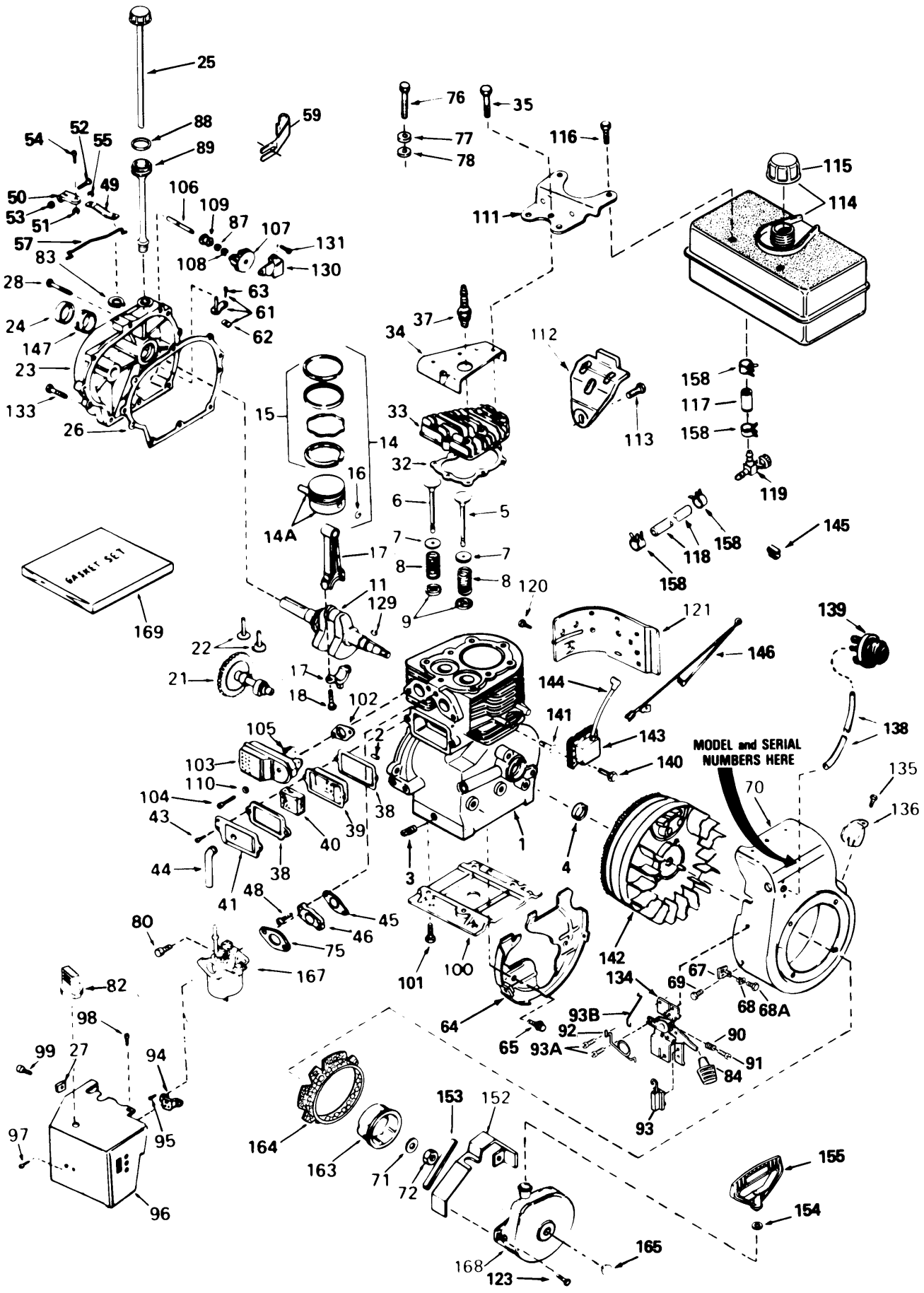

Engine Tecumseh Model No. H60-75504w (continued)

Ref.	Part Number	Qty.	Description
115	35355	1	Cap-Fuel
116	650665	2	Screw (1/4-15X7/8)
117	30962	1	Line-Fuel
118	29774	1	Line-Fuel (8.62)
119	32961	1	Valve-Shut Off
120	650128	1	Screw
121	30622A	1	Extension-Blower Hsng.
123	29716	4	Screw
129	32589	1	Key-Flywheel
130	31843A	1	Bracket, Governor
131	650836	4	Screw (10-24X1/2)
133	650493	1	Screw
134	34677	1	Remote Speed Control ASM (Incl. Ref. #90-93)
135	650760	1	Screw (8-32 X 3/8)
136	33013	1	Screw
138	32180C	1	Line-Primer
139	570682	1	Primer-Asm
140	650814	2	Screw
141	650872	2	Stud
142	611085	1	Flywheel
143	34443A	1	Solid State
144	610118	1	Cover-Spark Plug
145	29443	1	Clip-Wire
146	35253	1	Ground Wire
147	31546	1	Bushing-Crankshaft
152	34127	1	Guard-Starter
153	32576	1	Seal, Snowguard
154	650168	1	Washer
155	590574	1	Handle-Starter, Mitten Grip
158	26460	4	Clamp-Line, Fuel
163	32125	1	Cup-Starter
164	35354	1	Screen-Starter
165	35392	1	Plug Starter
167	632379	1	Carburetor ASM (Incl. Ref. #75)
168	590604	1	Starter-Rewind
169	33235	1	Gasket Set

● Not illustrated

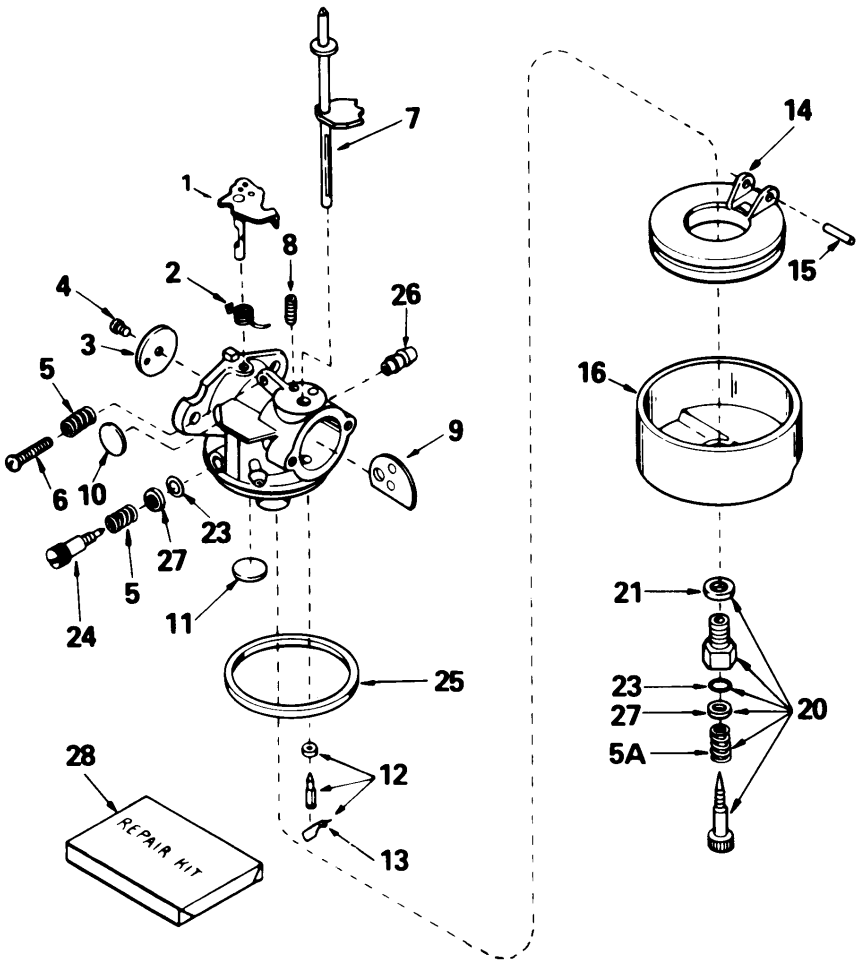

Carburetor Tecumseh No. 632379

Ref.	Part Number	Qty.	Description
1	31834	1	Shaft/Lever-Throttle
2	631767	1	Spring-Return, Throttle
3	631036	1	Shutter-Throttle
4	650506	2	Screw-Shutter
5	630766	1	Spring-Tension
5A	630738	1	Spring
6	650417	1	Screw-Throttle Crack Screw / Idle Speed
7	632373	1	Shaft-Choke
8	630735	1	Spring-Positioning, Choke
9	632372	1	Shutter-Choke
10	630748	1	Plug-Welch, Idle Mixture Well
11	631027	1	Plug-Welch, Atmospheric Vent

Ref.	Part Number	Qty.	Description
12	631021	1	Inlet Needle, Seat & Clip Assy. (Incl. Ref. #13)
13	631022	1	Clip-Spring
14	632019	1	Float
15	631024	1	Shaft-Float
16	631867	1	Bowl-Float (No Drain)
20	31839	1	Adjustment Screw Assy. (Incl. Ref. #5A, 21, 23 & 27)
21	27110	1	Washer-Bowl Nut
23	630740	1	"o"ring
24	631838	1	Screw-Idle
25	631028	1	O Ring-Bowl, Float
26	632164	1	Fitting-Fuel
27	630739	1	Washer
28	31840	1	Kit-Repair

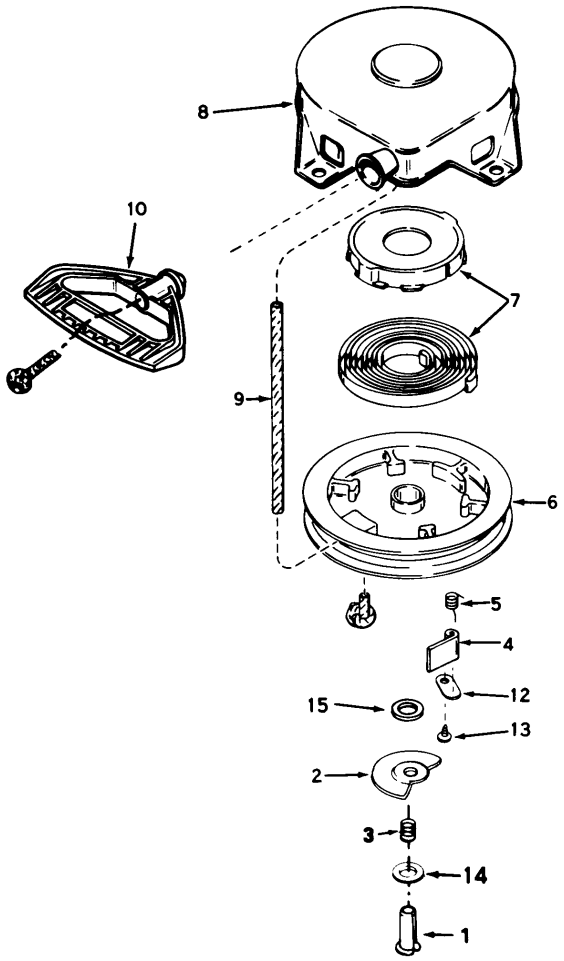

Rewind Starter Tecumseh No. 590604

Ref.	*Part Number*	*Qty.*	*Description*
1	590599A	1	Pin-Spring (Incl. Ref. #15)
2	590603	1	Washer
3	590598	1	Brake Spring
4	590148	2	Dog-Starter
5	590475	2	Spring-Dog
6	590478	1	Pulley
7	590414	1	Spring & Keeper Assy
8	590605	1	Housing-Starter
9	590451a	1	Rope-Starter
10	590574	1	Handle-Starter, Mitten Grip
12	590476	1	Retainer-Dog
13	590477	1	Screw
14	590600	1	Washer
15	590601	1	Washer



Count on it.