Form No. 3364-603 Rev B

TORO®

Count on it.

Parts Catalog

CCR™ 2450 GTS® Snowthrower

Model No. 38515—Serial No. 310006876 and Up

Ordering Replacement Parts

To order replacement parts, please supply the part number, the quantity, and the description of each part desired.

Understanding Reference Numbers

Each identified part in an illustration has a reference number. The reference number for a part also appears in the parts list, along with other information about the part.

This catalog uses two special reference number formats, one to indicate parts in a service assembly and another to indicate the quantity of a given part in an illustration.

Service Assembly Reference Numbers

Parts in service assemblies have reference numbers in the form a:b. The a represents the reference number of the entire service assembly and the b represents a sequential number unique to each part within the service assembly.

For example, a wheel assembly might be identified by reference number 6, the tire by 6:1, the valve by 6:2, and the wheel by 6:3. When you order the assembly identified by reference number 6, you receive all parts identified by reference numbers 6:1,6:2, and 6:3. However, you may also order any part individually. Reference numbers of this type appear in illustration and in parts lists.

Reference Numbers Indicating Quantity

In an illustration, if a reference number indicates more than one part, the reference number has the form nX y. The n represents the quantity of the part, the X is the multiplication symbol, and the y represents the reference number.

For example, in an illustration, the reference number 2X 37 means that two of the parts identified by reference number 37 are indicated.

List of Abbreviations

AR: as required

ASM: assembly

BBC: blade brake control

BHTF: button head thread forming

CARR: carriage

CCW: counter clockwise

CCW: counter clock wise

CW: clockwise

CW: clockwise

DEG: degrees

ECM: electronic control module

ECM: electronic control module

EXT: external

FH: flat head

GA: gauge

HD: heavy-duty

HF: hex flange

HH: hex head

HHF: hex head flange

HHFTF: hex head flange thread forming

HJ: hex jam

HLH: hex lag head

HOC: height-of-cut

HSBH: hex socket button head

HSFH: hex socket flat head

HSH: hex socket head

HWH: hex washer head

HWHTF: hex washer head thread forming

HWHTF: hex washer head thread forming

HYD: hydraulic

LH: left hand

NI: nylon insert

NPTF: national pipe thread fine

PFH: phillips flat head

PPH: phillips pan head

PPHTF: phillips pan head thread forming

PRH: phillips round head

PTH: phillips truss head

PTO: power-take-off

RH: right hand

ROPS: roll-over protection system

RRB: rear roller brush

SFH: slotted fillister head

SHH: slotted hex head

SHWH: slotted hex washer head

SPH: slotted pan head

SQH: square head

SRH: slotted round head

STD: standard

TAP: self tapping

TTH: torx truss head

© 2010—The Toro® Company
8111 Lyndale Avenue South
Bloomington, MN 55420

Contact us at www.Toro.com.
Printed in the USA.
All Rights Reserved

Contents

Rotor Housing and Scraper Assembly 4
Impeller Drive Assembly 5
Chute Assembly 6
Rotor Assembly 7
Engine, Fuel Tank and Frame Assembly 8
Shroud and Control Panel Assembly. 9
Handle Assembly 10
Cylinder, Piston, and Connecting Rod Assembly Briggs and Stratton 084132-0120-E8 11
Muffler, Carburetor and Intake Manifold Assembly Briggs and Stratton 084132-0120-E8 12
Flywheel, Blower Housing and Rewind Starter Assembly Briggs and Stratton 084132-0120-E8 14
Attachments and Accessories 15

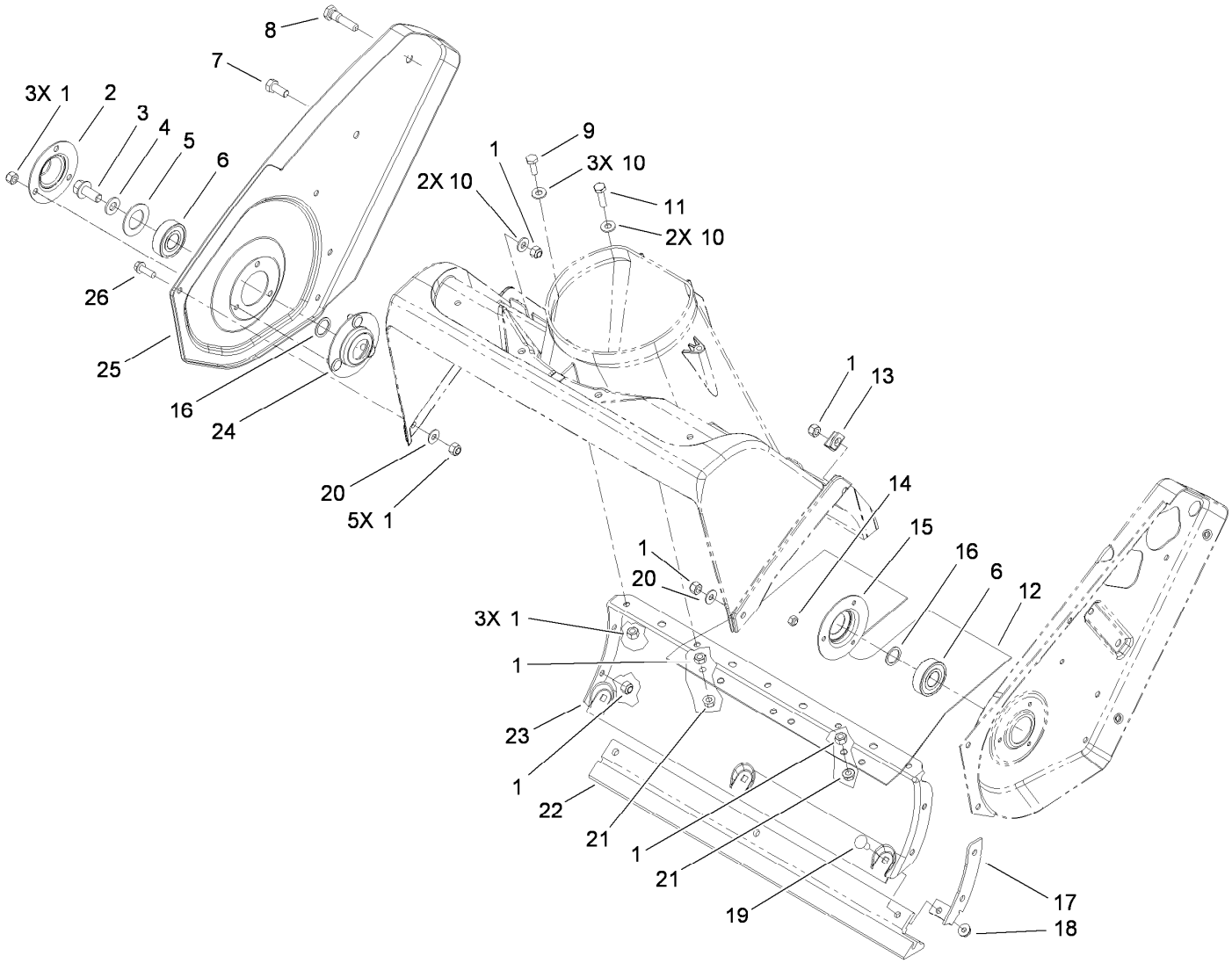

Rotor Housing and Scraper Assembly

Ref.	Part Number	Qty.	Description
1	3296-42	17	Nut-Lock, NI
2	52-7290-03	1	Retainer-Bearing
3	3234-25	1	Screw-HHF
4	3256-24	1	Washer-Flat
5	52-7270	1	Washer-Rubber
6	100-1048	2	Bearing-Ball
7	322-43	1	Screw-HH
8	38-8211	1	Pin-Rotor
9	321-4	3	Screw-HH
10	3256-22	7	Washer-Flat
11	321-6	2	Screw-HH
12	55-9512	1	Cover-Bottom
13	55-9430	1	Bracket-Housing

Ref.	Part Number	Qty.	Description
14	3296-2	3	Nut-Lock, NI
15	38-8620	1	Flange-Bearing
16	52-7280	2	Washer-Thrust
17	56-2610	1	Bracket-Housing, Lower
18	32149-2	3	Nut-Keps
19	3229-11	3	Screw-CARR
20	3256-1	2	Washer-Flat
21	32128-10	2	Nut-Lock, HHF
22	55-8760	1	Scraper
23	105-1967-03	1	Housing-Lower
24	52-9110	1	Flange-Bearing
25	105-1952-03	1	Sideplate-Right
26	32105-15	5	Screw

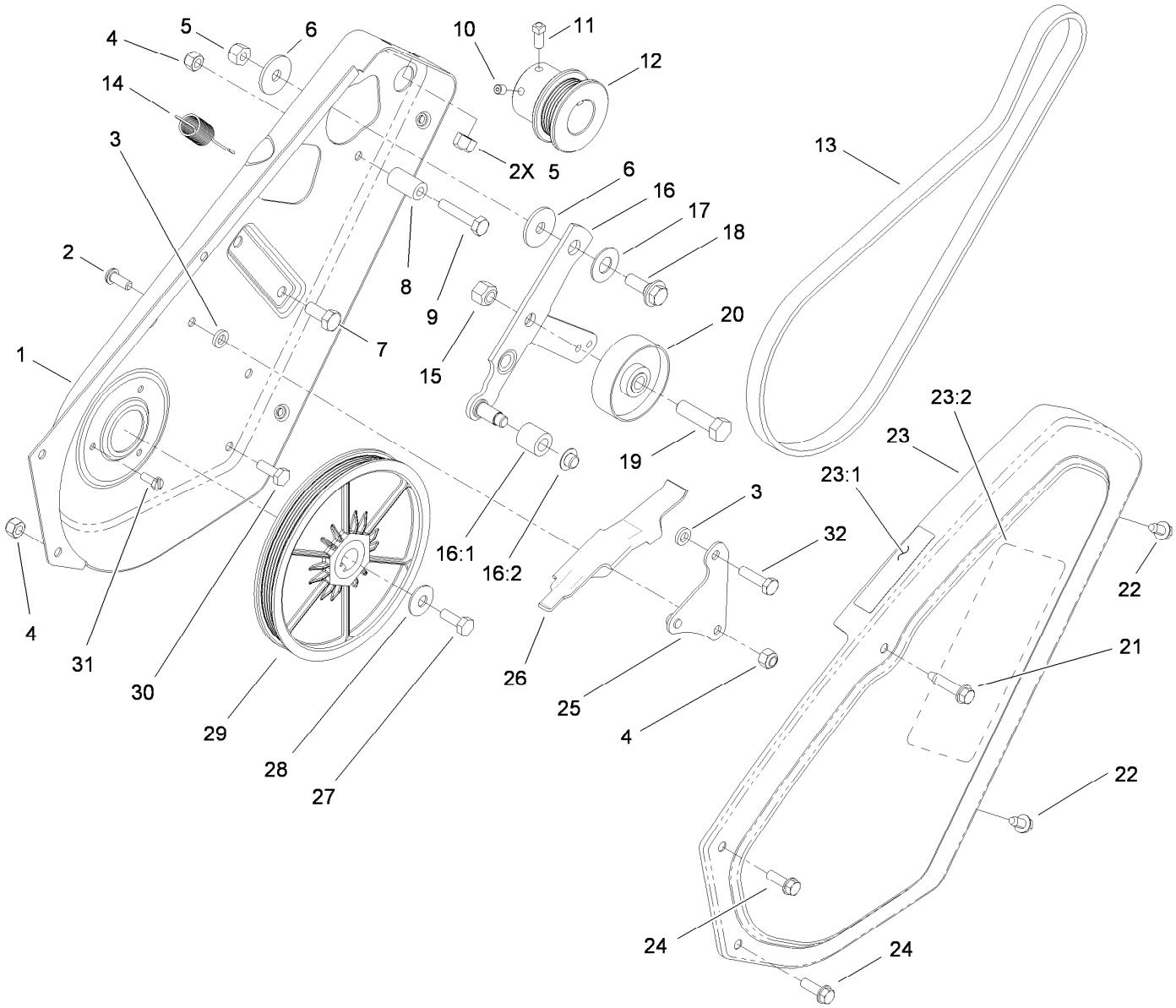

Impeller Drive Assembly

Ref.	Part Number	Qty.	Description
1	55-8851-03	1	Plate-Side, LH
2	3274-31	1	Screw-HSBH
3	55-9620	2	Spacer-Plate, Pivot
4	3296-42	3	Nut-Lock, NI
5	3296-29	3	Nut-Lock, NI
6	5-4460	2	Washer-Pivot
7	322-3	2	Screw-HH
8	55-9530	1	Sleeve-Guide, Belt
9	321-13	1	Screw-HH
10	3245-32	1	Screw-HSH
11	3241-7	1	Screw-SQH
12	95-2673	1	Pulley-Engine
13	95-6151	1	Belt-Drive
14	55-9280	1	Spring-Extension
15	32152-2	1	Nut-Lock, Cone
16	105-3542	1	Idler Arm ASM
16:1	55-9520	1	Roller-Brake
16:2	32112-11	1	Nut-Push

Ref.	Part Number	Qty.	Description
17	25-5641	1	Washer
18	27-0410	1	Screw-Shoulder
19	323-29	1	Screw-HH
20	55-9290	1	Pulley-Idler
21	32144-110	1	Screw-HWH
22	12-3270	2	Screw
23	105-1997	1	Cover-Drive
23:1	104-2767	1	Decal-Warning
23:2	60-9480	1	Decal
24	32105-15	2	Screw
25	55-9570	1	Pivot Plate ASM
26	55-9550	1	Brake-Arm
27	321-30	1	Screw-HH
28	3290-456	1	Washer-Belleville
29	95-2672	1	Pulley Rotor ASM
30	321-4	2	Screw-HH
31	32105-8	3	Screw-SHH
32	321-6	1	Screw-HH

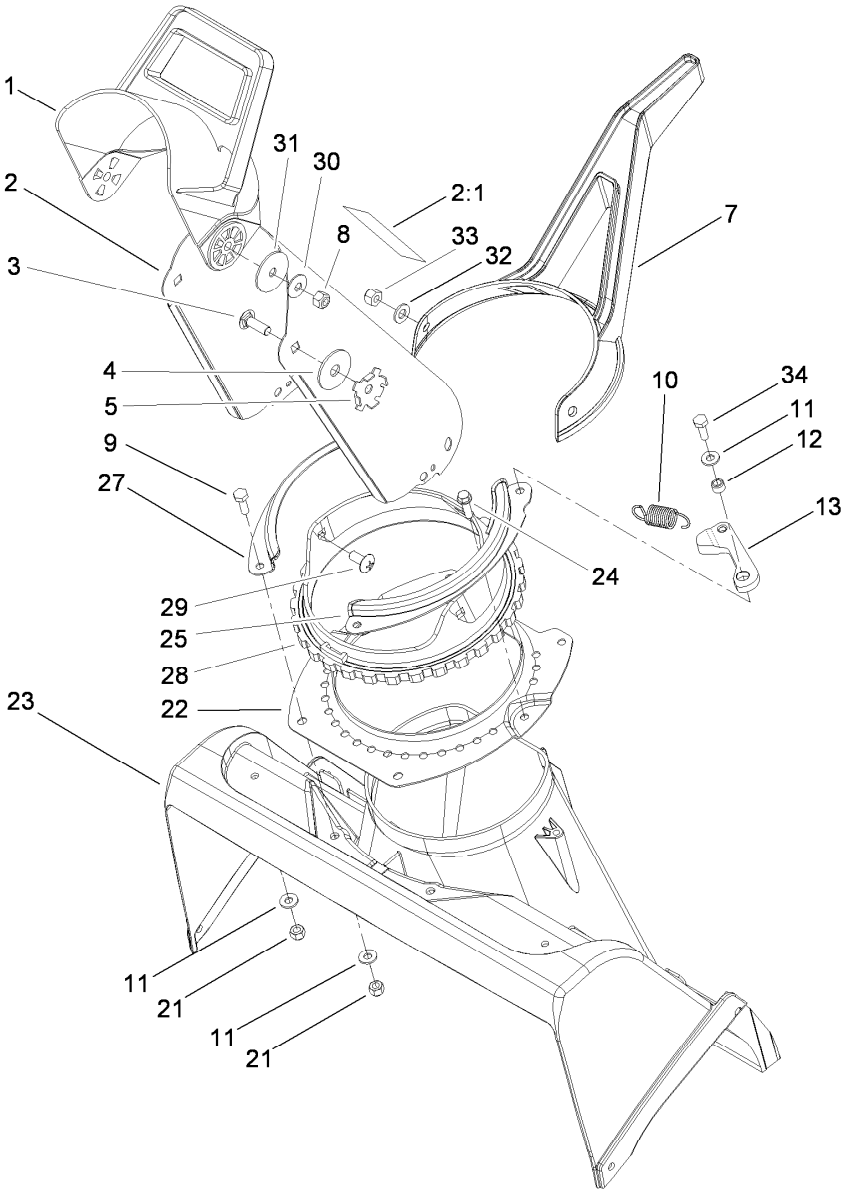

Chute Assembly

Ref.	Part Number	Qty.	Description
1	56-2680	1	Chute-Deflector
2	104-4115	1	Chute ASM
2:1	104-4135	1	Decal-Danger
3	3230-22	2	Screw-CARR
4	20-4320	2	Washer-Rubber
5	55-8950	2	Plate-Friction
7	94-9914	1	Handle-Control, Chute
8	3296-29	2	Nut-Lock, NI
9	321-4	3	Screw-HH
10	80-4600	1	Spring-Extension
11	3256-22	5	Washer-Flat
12	55-9370	1	Spacer-Blade, Rotor
13	80-4610	1	Detent

Ref.	Part Number	Qty.	Description
21	3296-42	6	Nut-Lock, NI
22	55-8921-03	1	Ring-Support, Chute
23	105-1950	1	Housing-Rotor, Upper
24	46-8091	2	Screw-HWH
25	71-4980-03	1	Retainer-Chute, LH
27	71-4990-03	1	Retainer-Chute, RH
28	104-2763	1	Ring-Chute
29	100-5487	3	Screw-PTH
30	3290-456	2	Washer-Belleville
31	3256-68	2	Washer-Flat
32	3256-70	3	Washer-Flat
33	3296-47	3	Nut-Lock, NI
34	321-6	1	Screw-HH

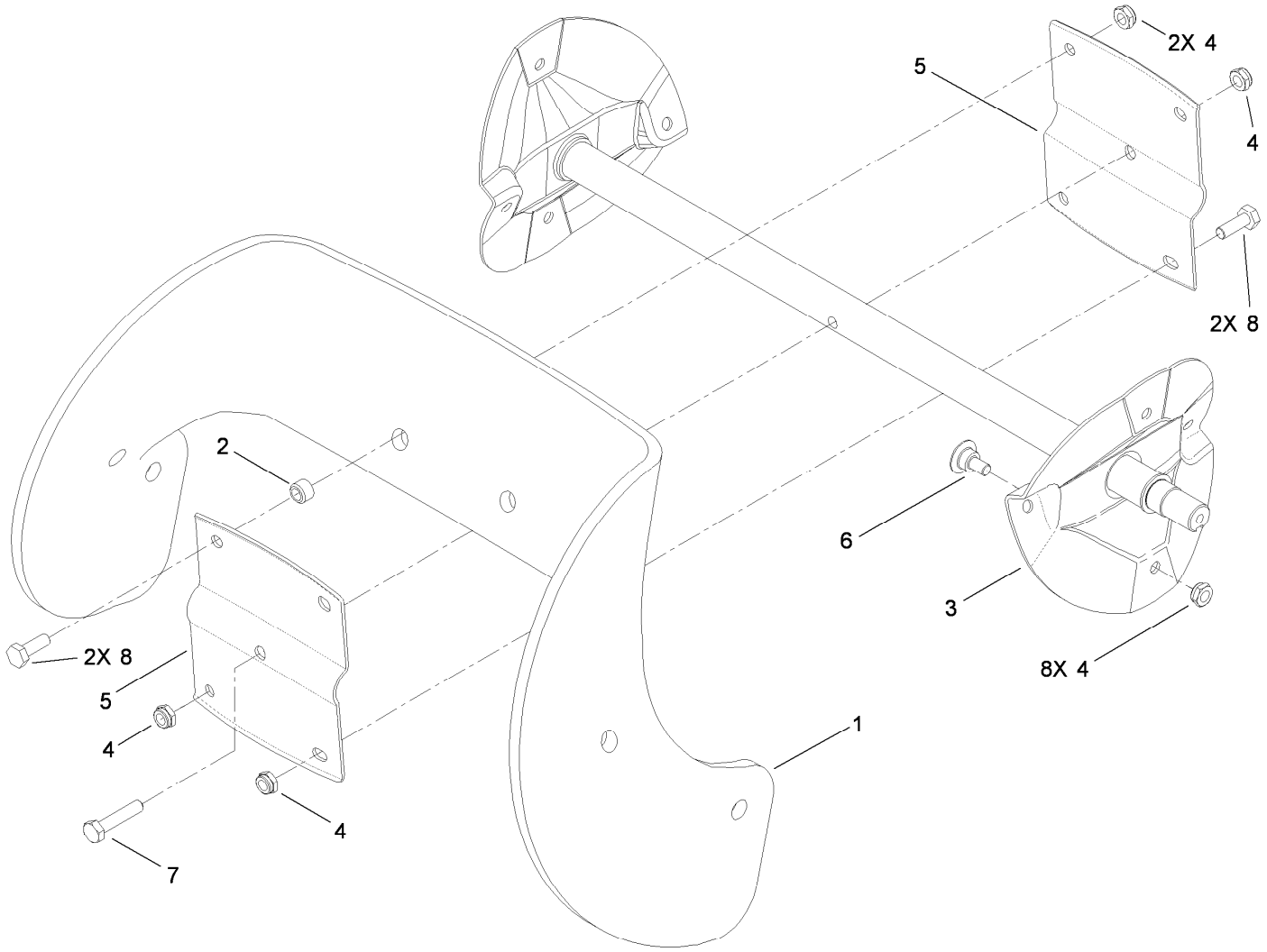

Rotor Assembly

Ref.	*Part Number*	*Qty.*	*Description*
1	99-9313	2	Blade-Rotor
2	55-9370	4	Spacer-Blade, Rotor
3	100-5478-03	1	Rotor ASM
4	3296-56	13	Nut-Lock, NI
5	66-6600-03	2	Half-Rotor
6	84-1971	8	Screw
7	321-8	1	Screw-HH
8	321-4	4	Screw-HH

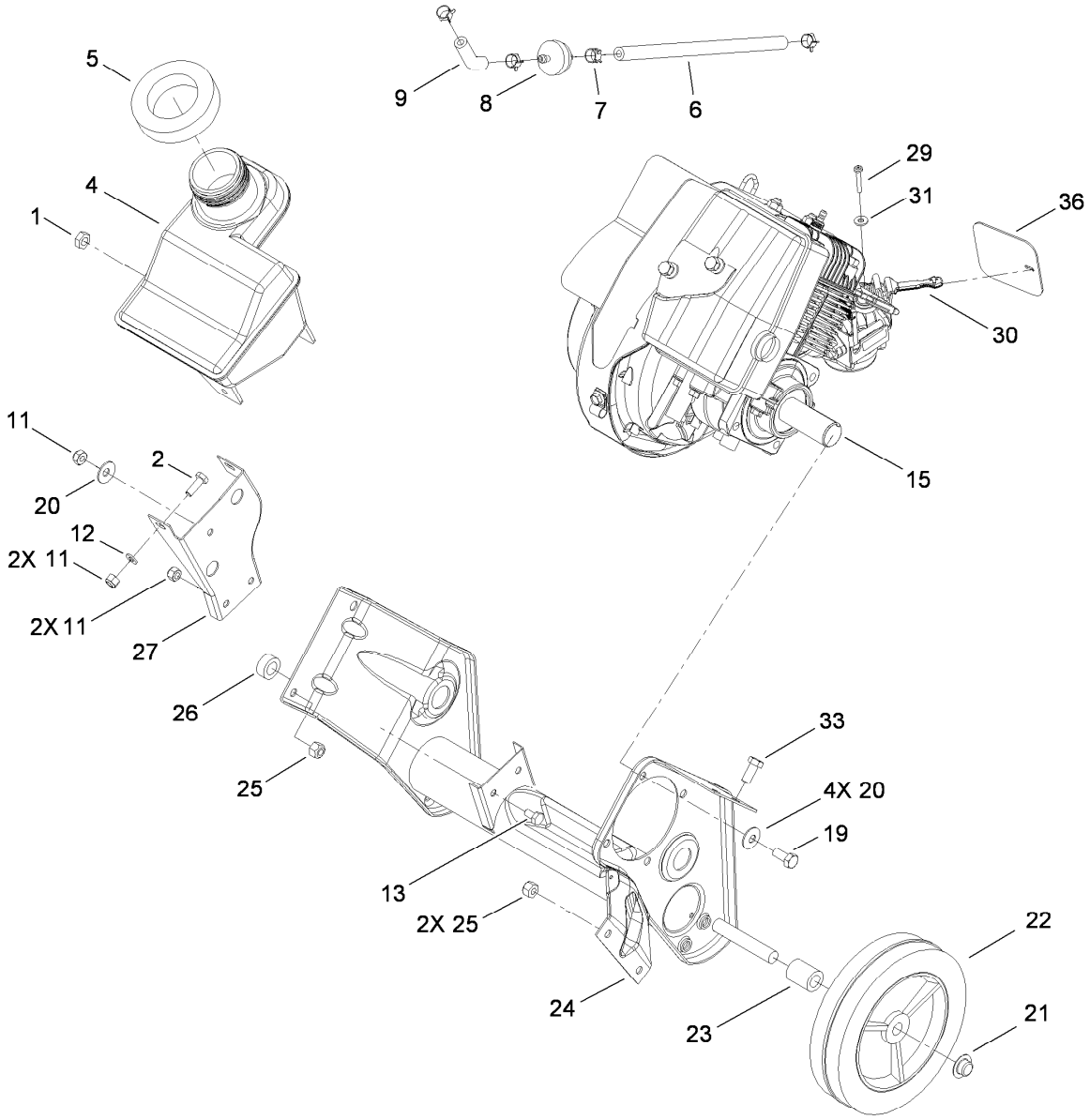

Engine, Fuel Tank and Frame Assembly

Ref.	Part Number	Qty.	Description
1	32152-8	1	Nut-Lock, Cone
2	321-4	2	Screw-HH
4	105-8952	1	Tank-Gas
5	55-9310	1	Seal-Foam
6	110-4894	1	Hose-Fuel
7	2412-98	4	Clamp
8	56-6360	1	Filter-Fuel
9	109-0304	1	Hose-Fuel
11	3296-42	5	Nut-Lock, NI
12	3256-22	2	Washer-Flat
13	321-2	2	Screw-HH
15		1	Engine-B & S, 084132-0120-E8 ●
19	322-3	4	Screw-HH

Ref.	Part Number	Qty.	Description
20	3290-456	5	Washer-Belleville
21	32112-14	2	Nut-Push
22	66-6510	2	Wheel
23	66-6501	1	Spacer-Wheel
24	105-1965-03	1	Frame
25	3296-29	3	Nut-Lock, NI
26	66-6500	1	Spacer-Wheel
27	105-1968-03	1	Bracket-Support, Recoil
29	32144-97	1	Screw-PPH, Plastite
30	104-0878	1	Lever-Choke
31	3256-14	1	Washer-Flat
33	322-43	2	Screw-HH
36	110-3444	1	Shield-Choke Hole

● Not serviced separately

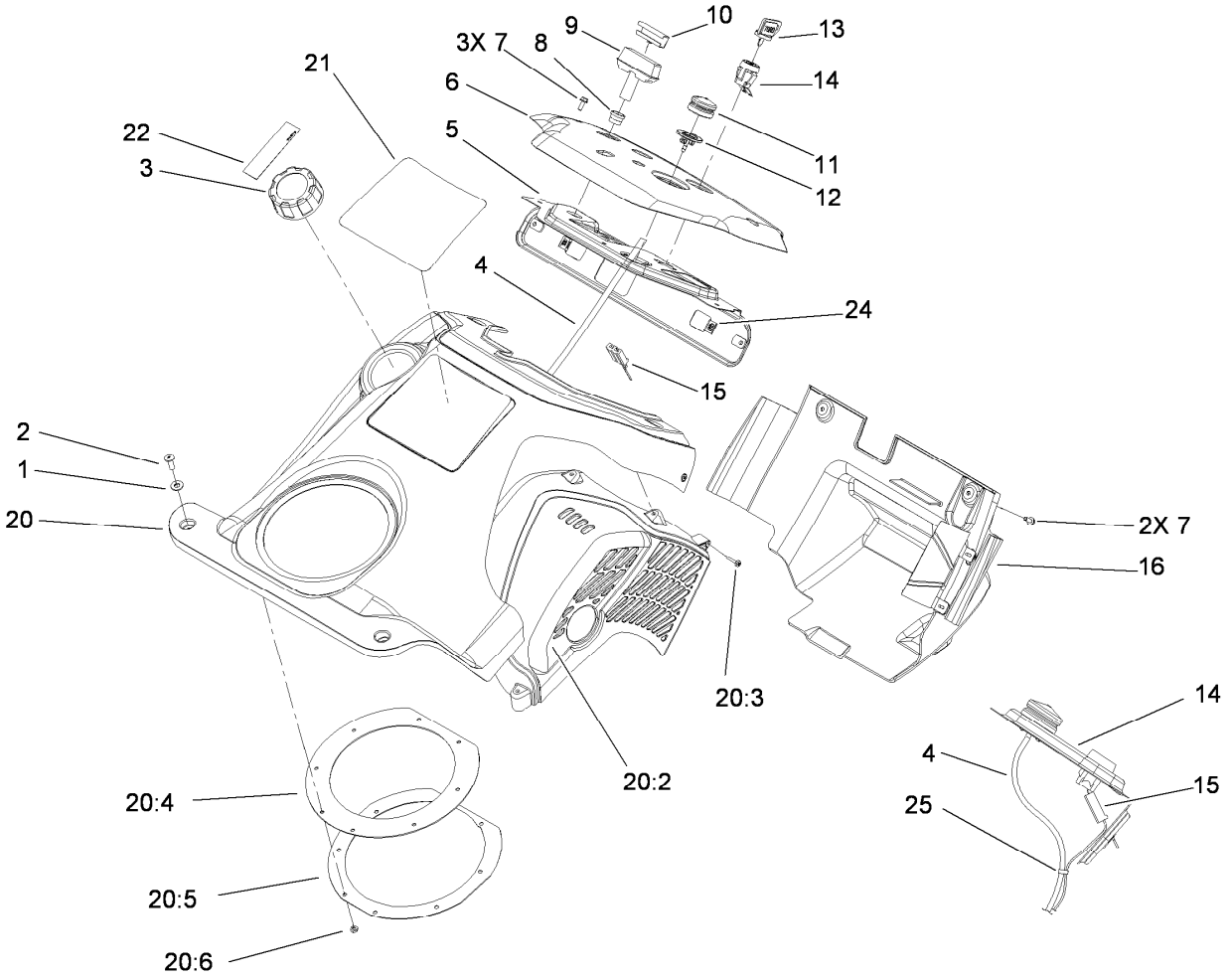

Shroud and Control Panel Assembly

Ref.	Part Number	Qty.	Description
1	3256-22	2	Washer-Flat
2	3250-32	2	Screw-PPH
3	104-4133	1	Gas Cap ASM
4	98-1372	1	Hose-Primer
5	105-1999-03	1	Panel-Support, Control
6	105-3521	1	Panel-Control
7	32144-112	5	Screw-HWH
8	55-9410	1	Guide-Rope, Starter
9	612825	1	Handle-Start
10	612824	1	Clip-Starter
11	66-7460	1	Bulb-Primer
12	44-2750	1	Body-Primer
13	63-8360	1	Key-Ignition

Ref.	Part Number	Qty.	Description
14	40-5940	1	Switch
15	218-532	1	Connector-Body
16	108-7335	1	Lower Shroud/Baffle ASM
20	110-2187	1	Upper Shroud ASM
20:2	108-7333	1	Shield-Heat
20:3	94-4496	5	Screw-PPH
20:4	105-3543	1	Seal-Chute
20:5	55-9540-03	1	Retainer-Seal, Chute
20:6	3290-474	8	Palnut
21	114-9268	1	Decal
22	104-9748	1	Tape-Mix, Oil
24	100-9889	2	Nut-Speed
25	250-4	1	Tie-Cable

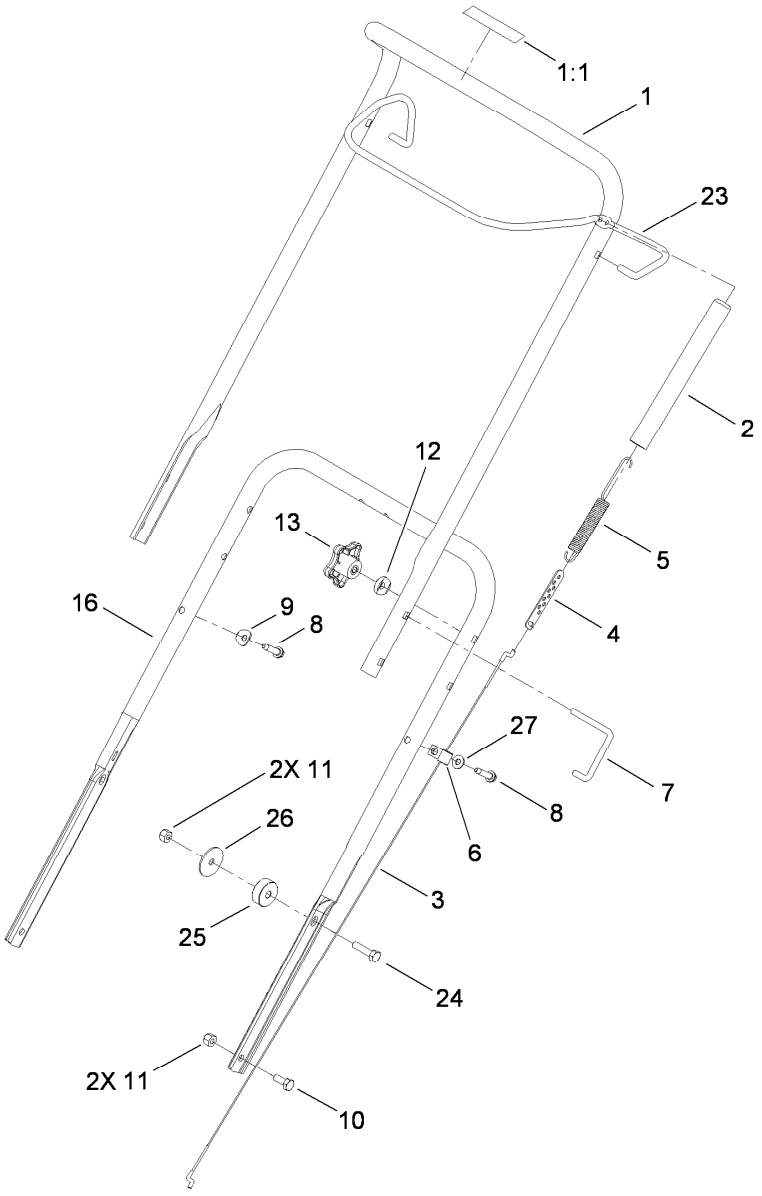

Handle Assembly

Ref.	Part Number	Qty.	Description
1	95-2669	1	Upper Handle ASM
1:1	104-2775	1	Decal-Drive, Rotor
2	71-5530	1	Cover-Spring
3	110-2182	1	Cable-Clutch
4	71-5330	1	Adjuster-Cable, Clutch
5	110-2181	1	Spring-Extension
6	2412-91	1	Clamp
7	98-2266	2	Lock-Handle
8	32144-110	2	Screw-HWH
9	3-7501	1	Washer

Ref.	Part Number	Qty.	Description
10	322-3	2	Screw-HH
11	3296-29	4	Nut-Lock, NI
12	107-3844	2	Washer
13	106-4161	2	Knob-Handle
16	55-9121-03	1	Handle-Lower
23	100-5473-03	1	Bail-Control
24	322-6	2	Screw-HH
25	105-1961	2	Spacer
26	3256-68	2	Washer-Flat
27	3256-22	1	Washer-Flat

1036 EMISSIONS LABEL

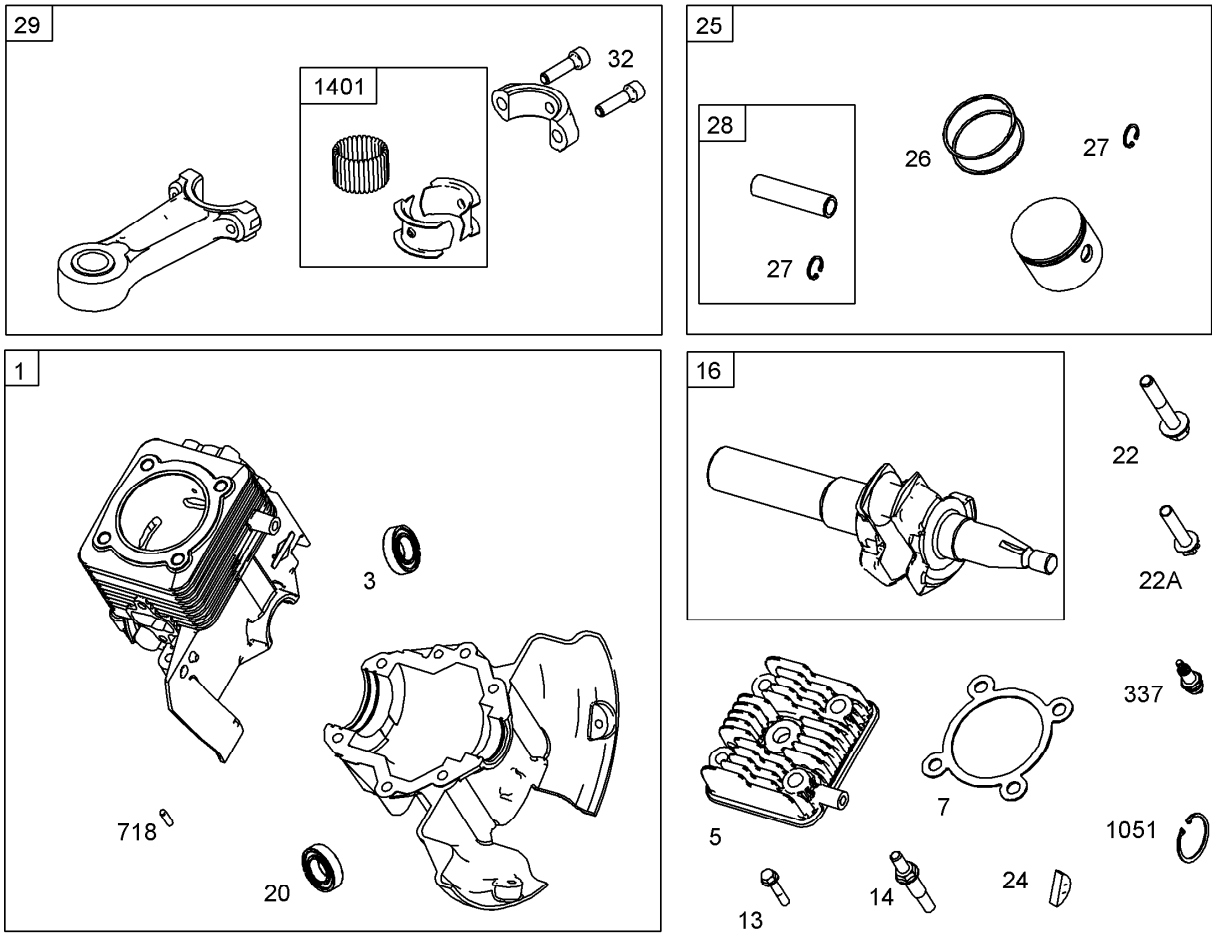

Cylinder, Piston, and Connecting Rod Assembly
Briggs and Stratton 084132-0120-E8

Ref.	*Part Number*	*Qty.*	*Description*
1	801260	1	Cylinder Asm (Non Boost, Rewind Start) ●
3	801262	1	Seal-Oil (Magneto Side) ●
5	801283	1	Head-Cylinder ●
7	801263	1	Gasket-Head, Cylinder ●
13	801264	1	Screw (Cylinder Head) ●
14	801265	1	Stud (Cylinder Head) ●
16	801220	1	Crankshaft ASM ●
20	801261	1	Seal-Oil (PTO Side) ●
22	801266	1	Screw (Crankcase Cover/Sump) ●
22A	801271	1	Screw (Crankcase Cover/Sump) ●
24	801234	1	Key-Flywheel ●
25	801279	1	Piston ASM ●
26	801280	1	Ring Set ●
27	801275	1	Lock-Pin, Piston ●
28	801276	1	Pin-Piston ●
29	801277	1	Rod-Connecting ●
32	801278	1	Screw (Connecting Rod) ●
337	801254	1	Sparkplug ●
718	690959	1	Pin-Locating ●
1051	801274	1	Ring-Retaining ●
1036		1	Label-Emissions ●
1401	801290	1	Roller-Strip ●

● Obtain parts from www.briggsandstratton.com

Muffler, Carburetor and Intake Manifold Assembly
Briggs and Stratton 084132-0120-E8

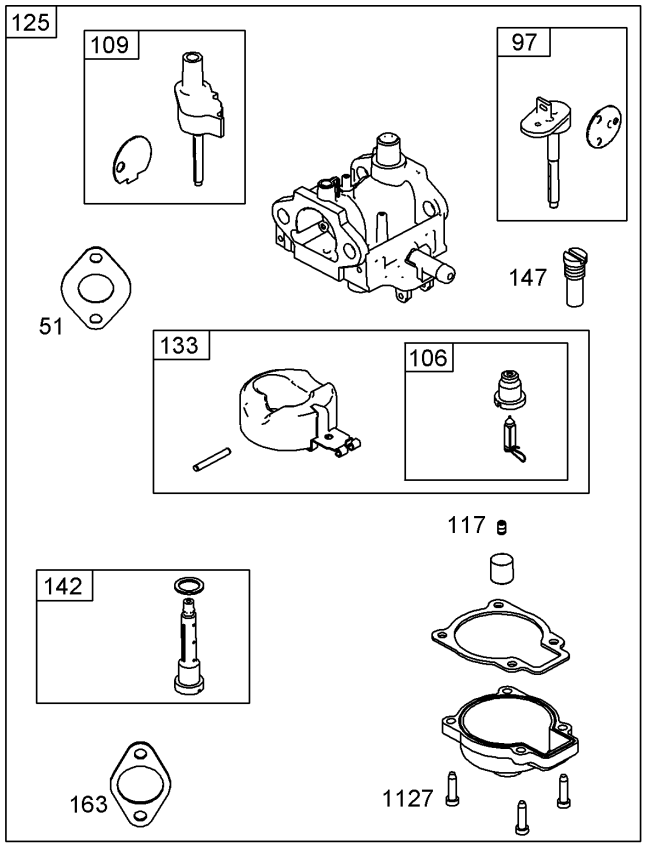

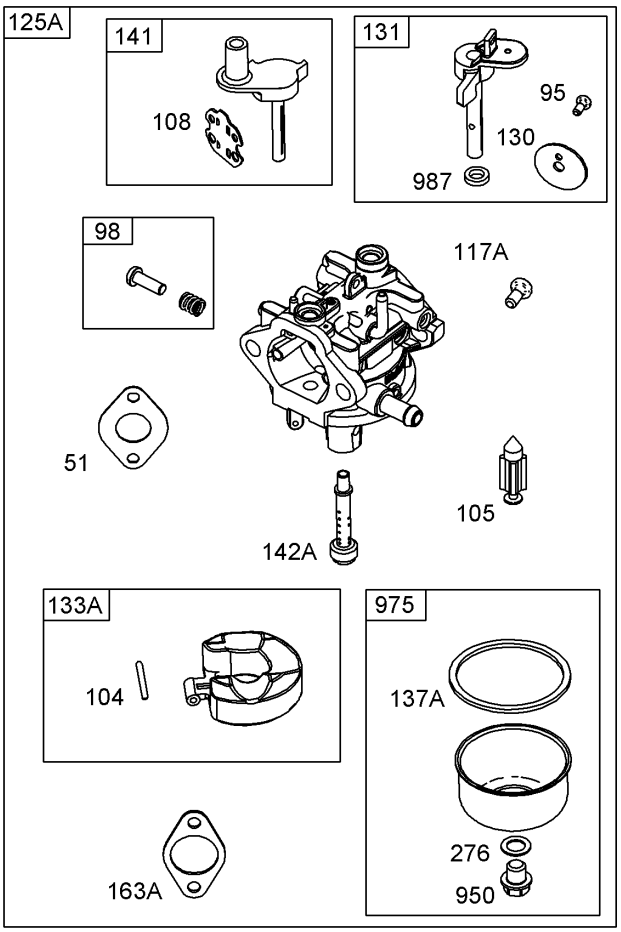

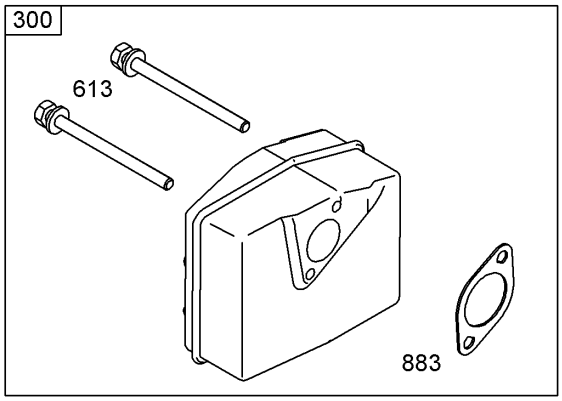

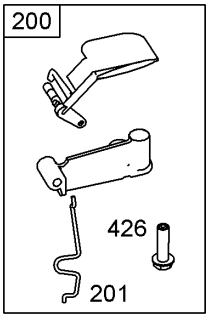

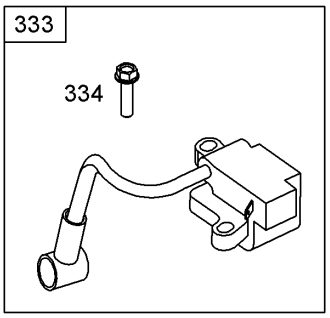

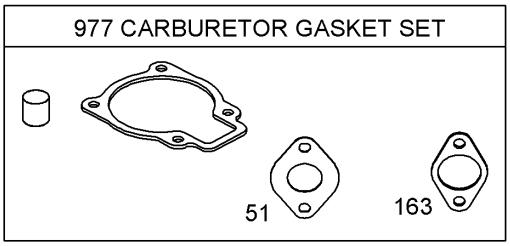

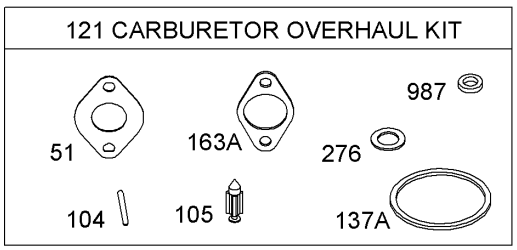

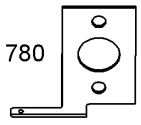

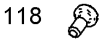





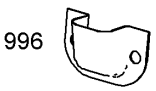





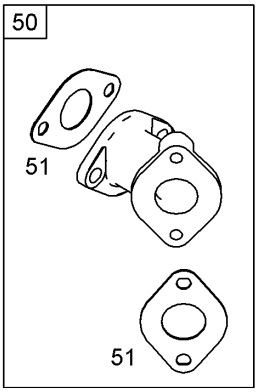

Muffler, Carburetor and Intake Manifold Assembly
Briggs and Stratton 084132-0120-E8 (continued)

Ref.	Part Number	Qty.	Description
50	801232	1	Manifold-Intake ●
51	801224	1	Gasket-Intake ●▲■
54	801230	1	Screw (Intake Manifold) ●
95	801415	1	Screw (Throttle Valve) (Used After Code Date 06060600) ●
97	801306	1	Shaft-Throttle (Used Before Code Date 06060700) ●
98	801419	1	Idle Speed Kit (Used After Code Date 06060600) ●
104	691242	1	Pin-Hinge, Float (Used After Code Date 06060600) ●▲
105	801423	1	Valve-Needle, Float (Used After Code Date 06060600) ●▲
106	801317	1	Seat-Inlet (Used Before Code Date 06060700) ●
108	801413	1	Valve-Choke (Used After Code Date 06060600) ●
109	801307	1	Shaft-Choke (Used Before Code Date 06060700) ●
117	801310	1	Jet-Main (Standard) (Used Before Code Date 06060700) ●
117A	801425	1	Jet-Main (Used After Code Date 06060600) ●
118	801426	1	Jet-Main (Used After Code Date 06060600) ●
121	801427	1	Carburetor Overhaul Kit (Used After Code Date 06060600) ●
125	801233	1	Carburetor (Used Before Code Date 06060700) ●
125A	801396	1	Carburetor (Used After Code Date 06060600) ●
130	801414	1	Valve-Throttle (Used After Code Date 06060600) ●
131	801417	1	Throttle Shaft Kit (Used After Code Date 06060600) ●
133	801316	1	Float-Carburetor (Used Before Code Date 06060700) ●
133A	801422	1	Float-Carburetor (Used After Code Date 06060700) ●
137A	693981	1	Gasket-Bowl, Float (Used After Code Date 06060600) ▲●
141	801418	1	Choke Shaft Kit (Used After Code Date 06060600) ●
142	801313	1	Nozzle-Carburetor (Used Before Code Date 06060700) ●
142A	801424	1	Nozzle-Carburetor (Used After Code Date 06060600) ●
147	801308	1	Jet-Pilot (Used Before Code Date 06060700) ●
163	801227	1	Gasket-Cleaner, Air (Used Before Code Date 06060700) ■●
163A	801397	1	Gasket-Cleaner, Air (Used After Code Date 06060600) ▲●
200	801289	1	Blade-Governor ●
201	801225	1	Link-Vane, Air ●
209	801223	1	Spring-Governor ●
276	692255	1	Washer-Sealing (Used After Code Date 06060600) ▲●
300	801250	1	Muffler ●
333	801268	1	Armature-Magneto ●
334	801267	1	Screw (Magneto Armature) ●
426	801231	1	Screw (Governor Blade) ●
613	801251	1	Screw (Muffler) ●
654	801324	1	Nut (Intake Manifold) (Used Before Code Date 05042600) ●
711	801229	1	Screw (Carburetor Shield) ●
780	801228	1	Anchor-Spring ●
789	801253	1	Wire ASM ●
883	801252	1	Gasket-Exhaust ●
950	801421	1	Screw-Bowl, Float (Used After Code Date 06060600) ●
975	801420	1	Bowl-Float (Used After Code Date 06060600) ●
977	801312	1	Gasket Set- (Used Before Code Date 06060700) ●
987	801416	1	Seal-Shaft,Throttle (Used After Code Date 06060600) ●▲
996	801226	1	Shield-Carburetor ●
1127	801318	1	Screw (Float Bowl) (Used Before Code Date 06060700) ●

● Obtain parts from www.briggsandstratton.com
▲ Included in Carburetor Overhaul Kit (Ref. No. 121)
■ Included in Carburetor Gasket Set (Ref. No. 977)

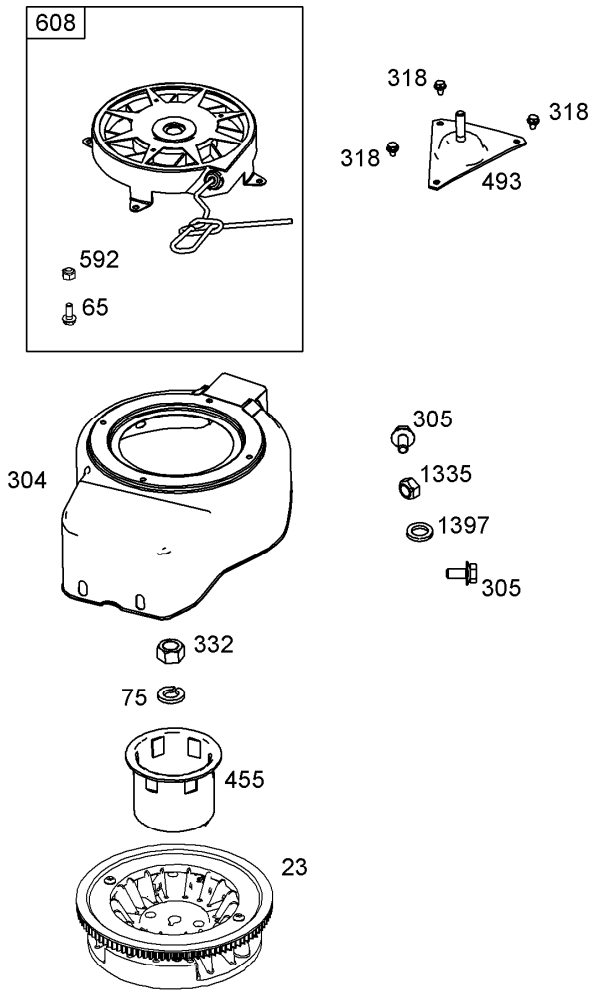

Flywheel, Blower Housing and Rewind Starter Assembly
Briggs and Stratton 084132-0120-E8

Ref.	*Part Number*	*Qty.*	*Description*
23	801246	1	Flywheel ●
65	801243	1	Screw (Rewind Starter) ●
75	801237	1	Washer (Flywheel) ●
304	801257	1	Housing-Blower ●
305	801239	1	Screw (Blower Housing) ●●
318	801241	1	Screw (Mounting Bracket) ●●
332	801238	1	Nut (Flywheel) ●
455	801235	1	Cup-Flywheel ●
493	801240	1	Bracket-Mounting ●
592	801244	1	Nut (Rewind Starter) ●●
608	801242	1	Starter-Rewind ●
1335	801269	1	Nut (Blower Housing) ●●
1397	801270	1	Washer (Blower Housing) ●

● Obtain parts from www.briggsandstratton.com

Attachments and Accessories

For 38515 CCR 2450 GTS Snowthrower

Product Name	Model/Part
Toro 2 Cycle Oil (2.6 oz, 48/Case)	38901
Toro 2 Cycle Oil (2.6 oz, Mini Pallet)	38901P
Toro Single Stage Cover	490-7464
Plain Single Stage Cover	490-7465
Snow Cab	88-0600



Count on it.