Form No. 3319-832 Rev A

TORO®

Count on it.

Parts Catalog

Groundsmaster® 3000-D

2 and 4 Wheel Drive Traction Unit

Model No. 30301—Serial No. 80001 and Up

Model No. 30301TC—Serial No. 80001 and Up

Model No. 30302—Serial No. 80001 and Up

Model No. 30302TC—Serial No. 80001 and Up

Register at www.Toro.com.

Original Instructions (EN)

Ordering Replacement Parts

To order replacement parts, please supply the part number, the quantity, and the description of each part desired.

Understanding Reference Numbers

Each identified part in an illustration has a reference number. The reference number for a part also appears in the parts list, along with other information about the part.

This catalog uses two special reference number formats, one to indicate parts in a service assembly and another to indicate the quantity of a given part in an illustration.

Service Assembly Reference Numbers

Parts in service assemblies have reference numbers in the form a:b. The a represents the reference number of the entire service assembly and the b represents a sequential number unique to each part within the service assembly.

For example, a wheel assembly might be identified by reference number 6, the tire by 6:1, the valve by 6:2, and the wheel by 6:3. When you order the assembly identified by reference number 6, you receive all parts identified by reference numbers 6:1,6:2, and 6:3. However, you may also order any part individually. Reference numbers of this type appear in illustration and in parts lists.

Reference Numbers Indicating Quantity

In an illustration, if a reference number indicates more than one part, the reference number has the form nX y. The n represents the quantity of the part, the X is the multiplication symbol, and the y represents the reference number.

For example, in an illustration, the reference number 2X 37 means that two of the parts identified by reference number 37 are indicated.

List of Abbreviations

AR: as required

ASM: assembly

BBC: blade brake control

BHTF: button head thread forming

CARR: carriage

CCW: counter clockwise

CCW: counter clock wise

CW: clockwise

CW: clockwise

DEG: degrees

ECM: electronic control module

ECM: electronic control module

EXT: external

FH: flat head

GA: gauge

HD: heavy-duty

HF: hex flange

HH: hex head

HHF: hex head flange

HHFTF: hex head flange thread forming

HJ: hex jam

HLH: hex lag head

HOC: height-of-cut

HSBH: hex socket button head

HSFH: hex socket flat head

HSH: hex socket head

HWH: hex washer head

HWHTF: hex washer head thread forming

HWHTF: hex washer head thread forming

HYD: hydraulic

LH: left hand

NI: nylon insert

NPTF: national pipe thread fine

PFH: phillips flat head

PPH: phillips pan head

PPHTF: phillips pan head thread forming

PRH: phillips round head

PTH: phillips truss head

PTO: power-take-off

RH: right hand

ROPS: roll-over protection system

RRB: rear roller brush

SFH: slotted fillister head

SHH: slotted hex head

SHWH: slotted hex washer head

SPH: slotted pan head

SQH: square head

SRH: slotted round head

STD: standard

TAP: self tapping

TTH: torx truss head

© 2010—The Toro® Company
8111 Lyndale Avenue South
Bloomington, MN 55420

Contact us at www.Toro.com.
Printed in the USA.
All Rights Reserved

Contents

Frame, Fuel Tank and Battery Assembly 4
Front Frame and Seat Base Assembly 5
Steering Assembly 6
Steering Control Valve Asm. 93-5165 7
Traction Pedal Assembly 8
Front Axle Assembly 9
Hydraulic Housing Assembly 10
Hydraulic Housing Assembly-Control 12
Front Axle Gear Housing Assembly 13
Front Axle Cover Assembly 14
Front Axle Center Section Assembly 15
Brake Pedal Assembly 16
Control Console Assembly 17
Operator-S Control Console Assembly 18
Seat Assembly 20
Muffler and Rear Bumper Assembly 21
Lift Arm Assembly 22
Hydraulic Cylinder Assembly No. 95-5604 23
Engine Mount Assembly 24
Fan Bracket and Degasser Assembly 25
Radiator and Cooler Assembly 26
Hood Assembly 27
Rear Axle Assembly (model No. 30301) 28
Steering Cylinder Assembly No. 93-5502 29
Rear Axle Assembly (model No. 30302) 30
4wd Axle-Universal Joint and Kingpin Assembly 31
4wd Axle-Housing Assembly 32
Steering Cylinder Assembly No. 93-5962 33
Center Shroud and Air Cleaner Assembly 34
Air Cleaner Assembly No. 93-5111 35
Hydraulic Component Assembly 36
Manifold Assembly No. 94-9291 38
Drive Shaft Assembly 39
Cylinder Block Assembly 40
Cylinder Head Assembly 41
Piston and Crankshaft Assembly 42
Camshaft and Valve Assembly 44
Oil System Assembly 46
Oil Pump Assembly 47
Coolant System Assembly 48
Coolant Outlet Box Assembly 49
Intake Manifold Assembly 50
Injection Pump Assembly 51
Fuel Injector and Plumbing Assembly 52
Engine Mount Assembly 53
Alternator Assembly 54
Starter and Glow Plug Assembly 55
Fuel Filter Assembly 56

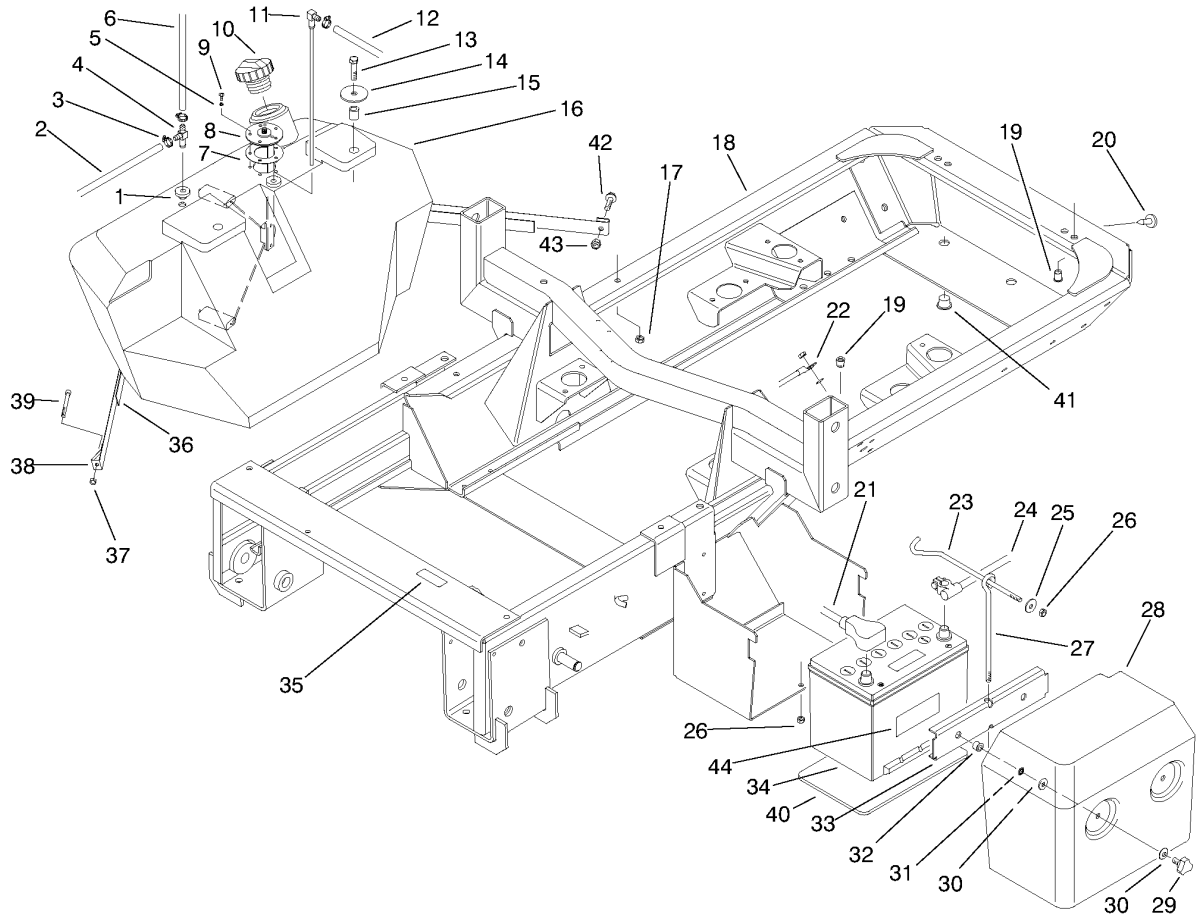

Frame, Fuel Tank and Battery Assembly

Ref.	Part Number	Qty.	Description
1	46-6560	2	Bushing
2	93-5483	1	Hose-Fuel
3	2412-108	3	Clamp-Worm
4	93-5119	1	Fitting
5	3253-15	5	Washer-Lock
6	95-5936	1	Hose-Fuel
7	62-7650	1	Gasket
8	92-9267	1	Sender-Fuel
9	32122-24	5	Screw-PTH
10	93-3102	1	Cap-Fuel
11	93-5453	1	Pipe-Stand
12	93-5484	1	Hose-Fuel
13	33105-040	2	Screw-HHF
14	83-1040	2	Washer-Flat
15	93-5384	2	Spacer
16	95-5621	1	Tank-Fuel
17	33025-00	2	Nut-Lock
18	93-5628	1	Frame (Incl. Ref. #19 & 35)
19	93-5450	7	Nut-Clinch
20	237-37	3	Bumper-Rubber
21	95-5947	1	Cable - Battery, Positive
22	18-2770	1	Cable-Ground
23	93-5118	1	Rod - Battery
24	93-5418	1	Cable-Battery
25	3256-82	1	Washer-Flat
26	33024-00	2	Nut-Lock
27	93-5117	1	Rod - Thread
28	93-5120	1	Cover Battery
29	95-9648	2	Knob
30	3256-3	4	Washer-Flat
31	32151-72	2	Ring-Retaining
32	32148-9	2	Insert-Nut
33	93-5116	1	Bracket-Battery
34		1	Battery ●
35	85-4730	1	Decal-Only, HYD Oil
35	93-8067	1	Decal-Oil
36	93-5273	1	Strap-Felt
37	32146-17	1	Nut-Lock
38	95-3034	1	Strap
39	3274-54	1	Screw-HSH
40	93-5990	1	Pad - Battery
41	95-1587	2	Plug
42	33103-016	1	Screw-HHF
43	33023-00	1	Nut-Lock
44	93-6668	1	Decal-Battery

● Not serviced separately

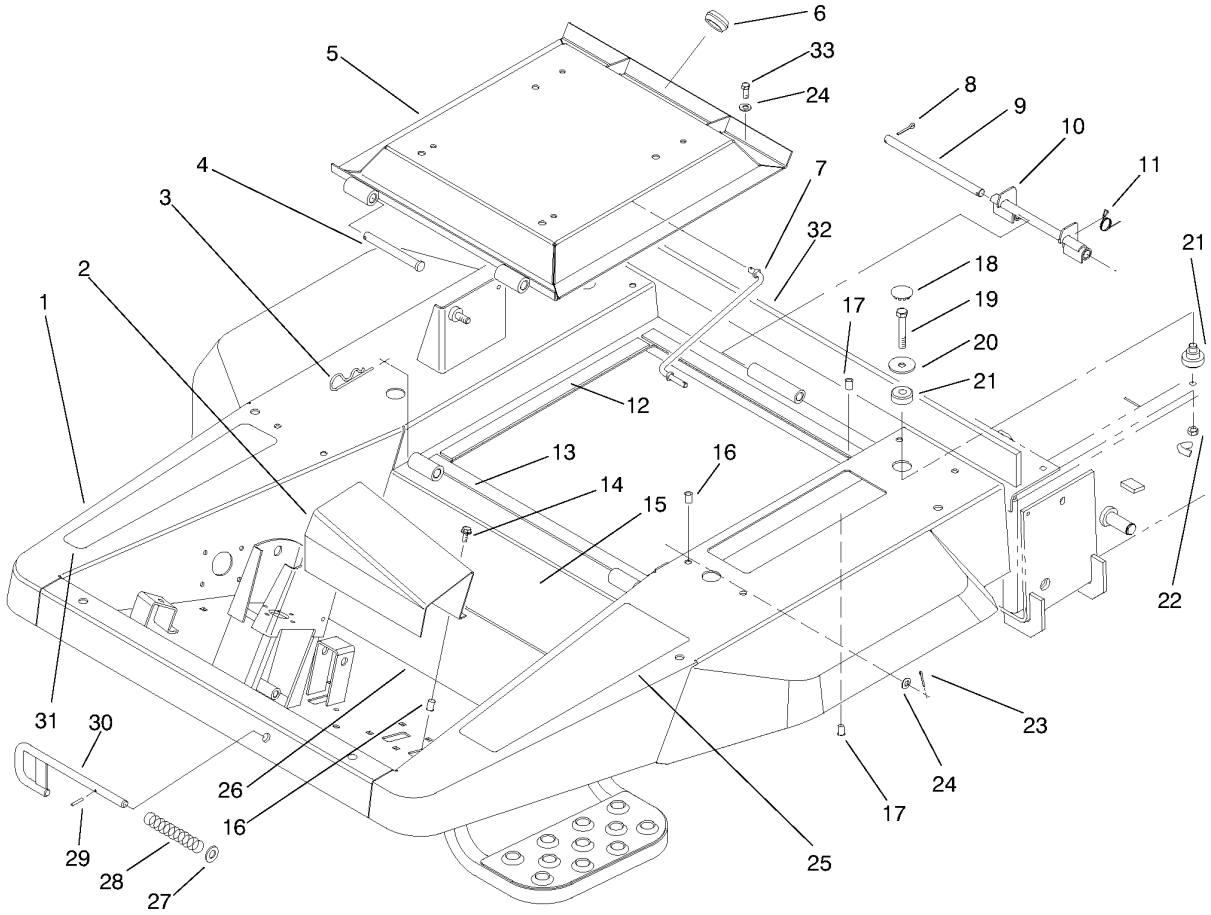

Front Frame and Seat Base Assembly

Ref.	Part Number	Qty.	Description
1	93-5627	1	Platform (Incl. Ref. #15-17, 25-26, &31)
2	93-5310	1	Cover-Tubes
3	3290-355	2	Pin-Hair
4	93-5343	2	Pin-Clevis
5	98-2395	1	Base-Seat
6	240-5	1	Grommet-Rubber
7	93-5338	1	Rod-Prop
8	3272-11	2	Pin-Cotter
9	93-5366	1	Shaft-Latch
10	93-5363	1	Latch ASM
11	93-5367	1	Spring-Torsion
12	93-5334	2	Strip-Foam, Seat
13	93-5335	2	Strip-Foam, Seat
14	33103-016	2	Screw-HHF
15	93-5348	1	Abrasive-Floor
16	93-5447	12	Nut-Clinch
17	93-5449	9	Nut-Clinch

Ref.	Part Number	Qty.	Description
18	93-3094	4	Plug-Cap
19	33115-060	4	Screw-HH
20	93-5308	4	Washer-Iso Mount
21	93-5307	4	Mount-Iso
22	33025-00	4	Nut-Lock
23	3272-5	2	Pin-Cotter
24	3256-23	4	Washer-Flat
25	93-5507	1	Abrasive-Platform
26	93-5349	1	Abrasive-Floor
27	3256-69	1	Washer-Flat
28	28-0570	1	Spring-Compression
29	32121-79	1	Pin-Roll
30	95-3033	1	Rod
31	92-5772	1	Decal - Traction Pedal
31	93-7834	1	Decal-Footrest, RH
32	93-5255	1	Strip-Foam, Plat
33	33114-020	2	Screw-HH

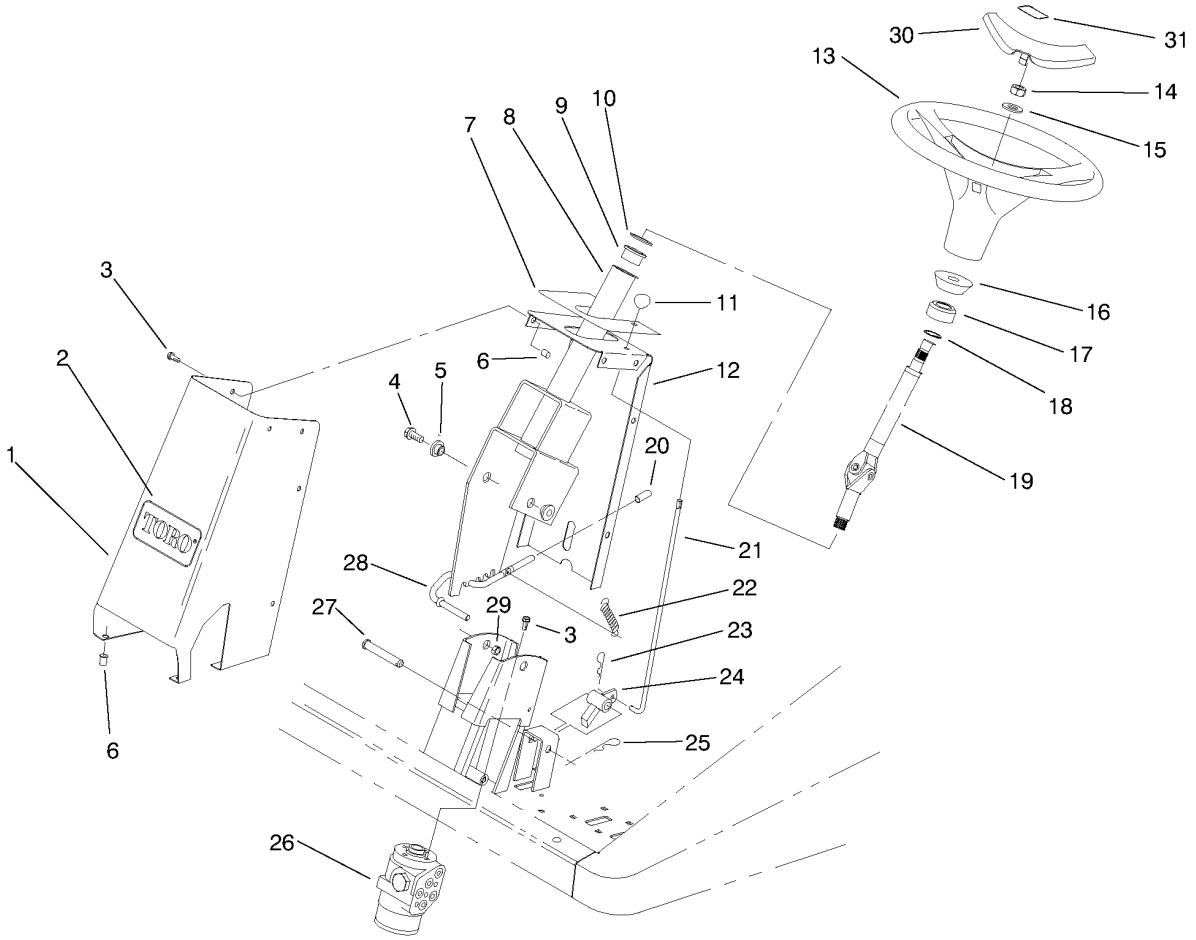

Steering Assembly

Ref.	Part Number	Qty.	Description
1	93-5633	1	Housing-Tower (Incl. Ref. #2 & 6)
2	67-1300	1	Decal
3	33103-016	16	Screw-HHF
4	33105-025	2	Screw-HHF
5	93-5988	2	Hub-Pivot
6	93-5447	12	Nut-Clinch
7	95-0814	1	Decal-Tower, Steering
8	93-5205	1	Column-Steering
9	256-132	2	Bushing-Flange
10	256-260	4	Washer
11	93-5312	1	Knob
12	95-5100	1	Cover-Tower (Incl. Ref. #6 & 7)
13	98-1471	1	Wheel-Steering
14	93-5590	1	Nut-Hex
15	3256-27	1	Washer-Flat
16	93-5429	1	Collar-Foam
17	93-5439	1	Seal-Steering
18	32151-29	2	Ring-Retaining
19	93-5428	1	Steering Shaft ASM
20	93-5446	1	Cap-Vinyl
21	93-5309	1	Rod-Brake Parking
22	93-5985	1	Spring-Extension
23	3272-5	1	Pin-Cotter
24	93-5276	1	Pawl-Brake
25	3272-10	1	Pin-Cotter
26	93-5165	1	Valve-Control, Steering
27	283-5	1	Pin-Clevis
28	93-5989	1	Rod-Tilt
29	33005-00	2	Nut-HF
30	88-3870	1	Cover-Wheel
31	98-1459	1	Decal

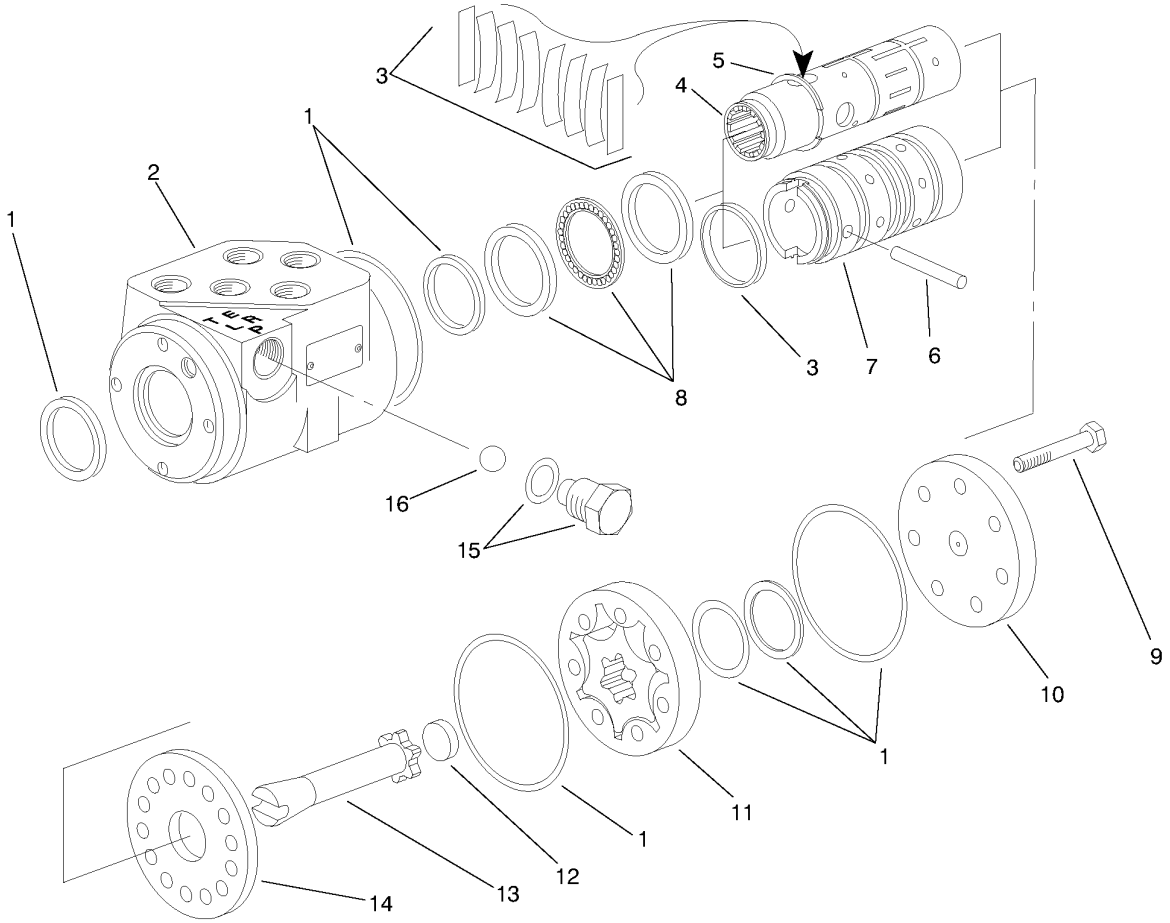

Steering Control Valve Asm. 93-5165

Ref.	*Part Number*	*Qty.*	*Description*
1	94-4099	1	Seal Kit
3	94-4095	1	Centering Spring Kit
4		1	Spool ●
5	94-4098	1	Ring-Retaining
6	94-4094	1	Pin
7		1	Sleeve ●
8	94-4096	1	Bearing Kit
9	94-4088	7	Screw-Cap
10	94-4089	1	Cap-End
11	94-4090	1	Gerotor
12	94-4091	1	Spacer
13	94-4093	1	Drive
14	94-4092	1	Plate-Wear
15	94-4097	1	Plug ASM
16	94-4100	1	Ball

● Not Serviced Separately.

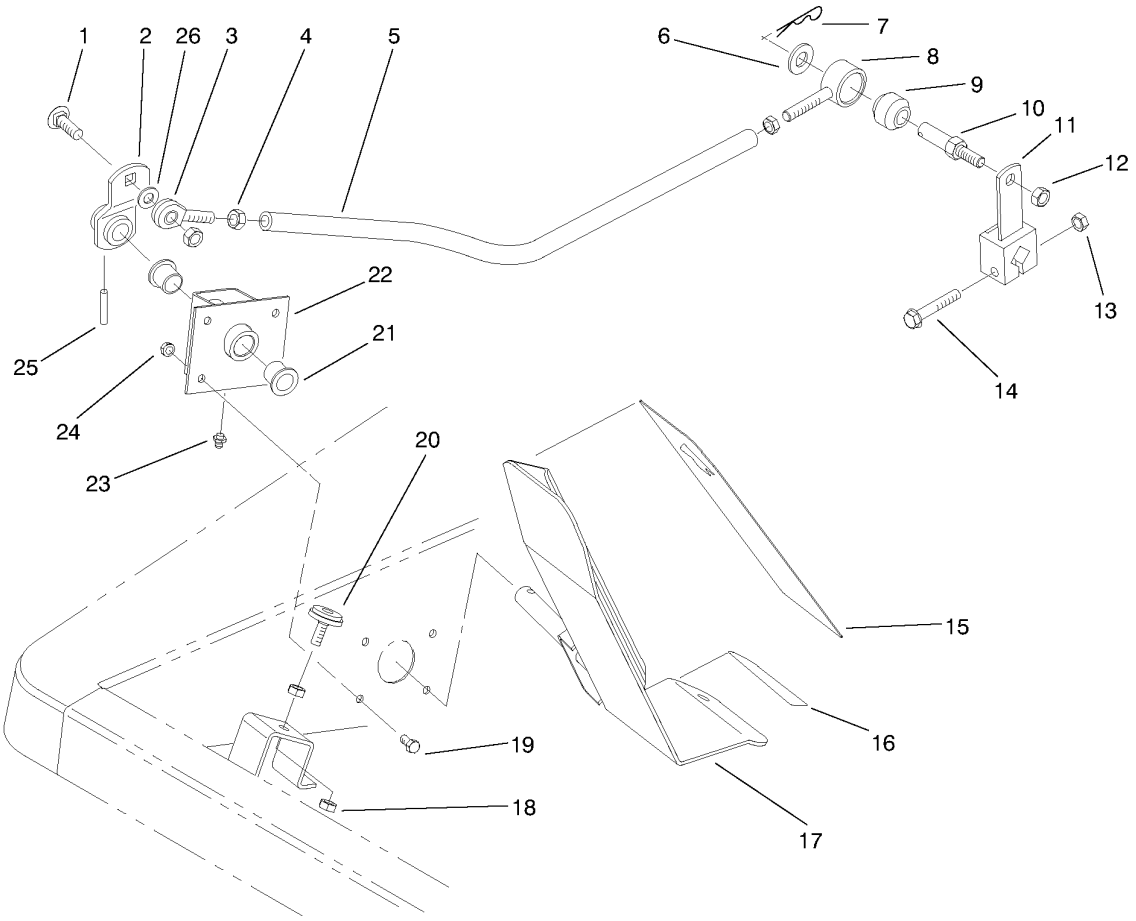

Traction Pedal Assembly

Ref.	Part Number	Qty.	Description
1	3231-25	1	Screw-CARR
2	93-5137	1	Lever-Traction
3	2411-36	1	Bearing-End, Rod
4	3220-3	2	Nut-HJ
5	93-5173	1	Tube-Control
6	3256-26	1	Washer-Flat
7	3290-355	1	Pin-Hair
8	93-5486	1	Hub Wa
9	23-2270	1	Bushing-Rubber
10	93-5488	1	Post - Hub
11	93-5175	1	Lever
12	3296-59	2	Nut-Lock, NI
13	33024-00	1	Nut-Lock

Ref.	Part Number	Qty.	Description
14	33104-050	1	Screw-HHF
15	93-5347	1	Abrasive-Pedal
16	93-5368	1	Abrasive-Pedal
17	93-5133	1	Pedal-Traction
18	3217-6	2	Nut-Hex
19	33113-016	4	Screw-HH
20	32141-36	1	Screw-Adjustment, Level
21	256-10	2	Bushing-Flange
22	93-5129	1	Bracket-Pedal
23	302-5	1	Fitting-Grease
24	33003-00	1	Nut-HF
25	32121-9	1	Pin-Roll, Slotted
26	3256-24	1	Washer-Flat

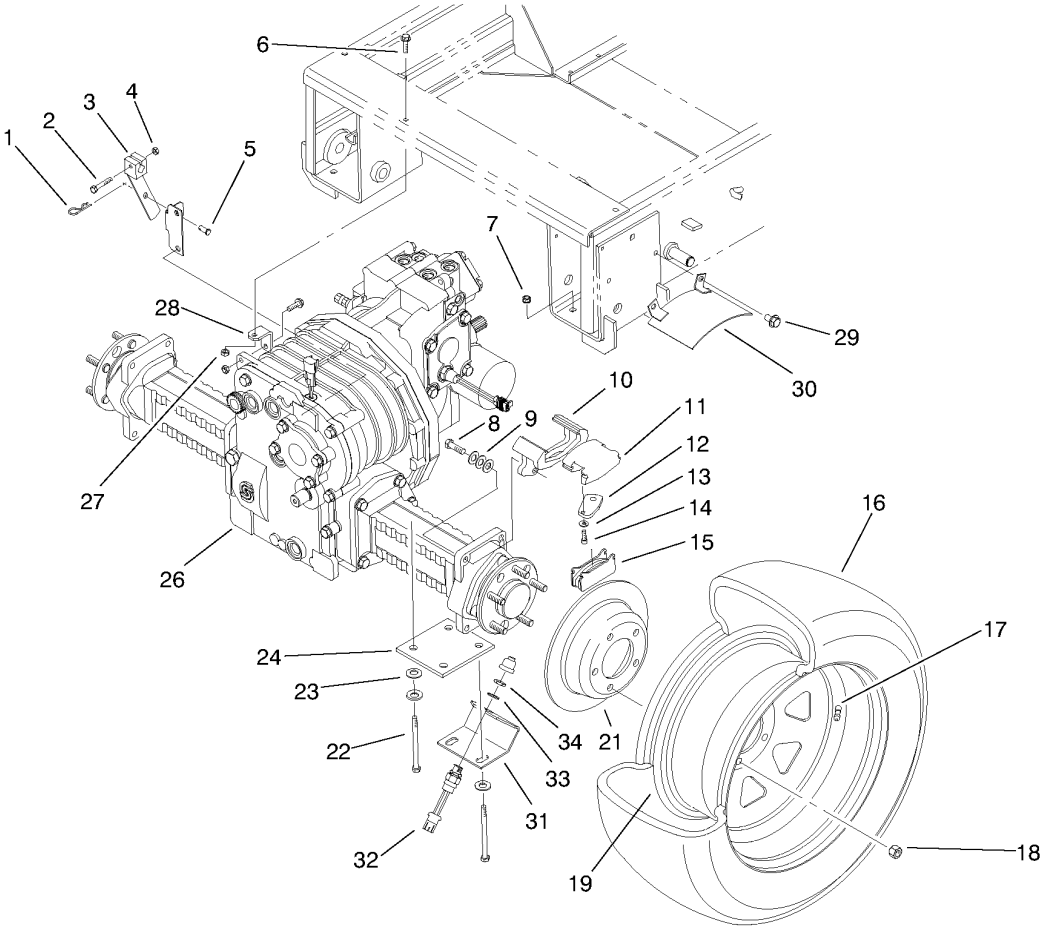

Front Axle Assembly

Ref.	Part Number	Qty.	Description
1	3290-467	1	Pin-Hair
2	33114-040	1	Screw-HH
3	93-5383	1	Lever
4	33024-00	1	Nut-Lock
5	283-62	1	Pin-Clevis
6	33104-025	2	Screw-HHF
7	33006-00	8	Nut-HF
8	323-44	4	Screw-HH
9	3290-461	12	Washer-Spring
10	94-4102	2	Bracket-Mounting
11	94-4104	2	Housing
12	94-4107	2	Lever
13	94-4106	2	Washer
14	94-4105	2	Screw
15	94-4103	4	Pad
16	93-5431	2	Tire

Ref.	Part Number	Qty.	Description
17	232-27	2	Stem-Valve
18	93-5268	10	Nut-Lug
19	93-5548	2	Wheel
21	93-5958	2	Brake-Rotor
22	33116-110	8	Screw-HH
23	3256-26	14	Washer-Flat
24	93-5036	2	Plate-Axle
26	95-5949	1	Axle-2 Speed
27	33024-00	2	Nut-Lock
28	93-5306	1	Bracket-Transaxle
29	32144-14	4	Screw-HWHTF
30	93-5977	2	Shield-Brake
31	93-4869	1	Bracket-Switch
32	94-3429	1	Switch-Ball
33	3254-5	1	Washer-Tooth, Internal
34	3220-6	2	Nut-Jam

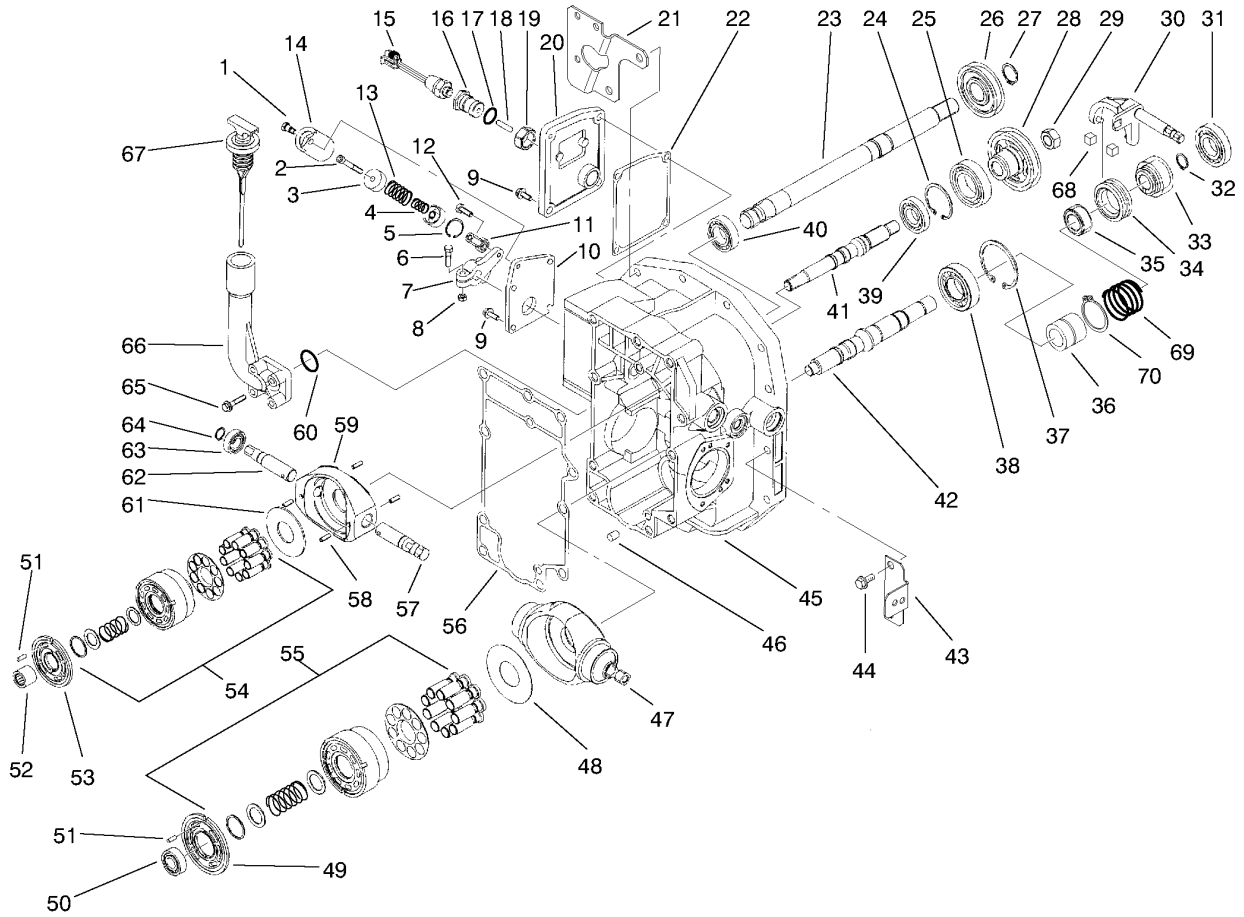

Hydraulic Housing Assembly

Ref.	Part Number	Qty.	Description
1	94-3928	1	Screw-HH
2		1	Screw-Soc. Hd. ■
3		2	Seat-Spring ■
4		1	Spring-Compression ■
6	94-3940	1	Screw-HH
7		1	Handle-Return, Neutral ■
8	94-3936	1	Nut-Lock, Hex
9	94-4002	8	Screw-HHF
10		1	Plate-Return, Neutral ■
11		1	Rod End-Female ■
12	94-3927	1	Screw-HH
13		1	Spring-Compression ■
14		1	Housing-Return, Neutral ■
15	95-7034	2	Switch-Netural
16	94-4045	1	Adjuster-Threaded
17	28-3570	1	O-Ring
18	94-4046	1	Pin
19	94-4044	1	Nut-Hex
20	94-3943	1	Cover-Neutral
21	94-9282	1	Bracket-Balance, Counter
22	94-3944	1	Gasket-Return, Neutral
23	94-3901	1	Shaft-Input
24	94-4029	1	Ring-Retaining, Int.
25	94-3971	1	Bearing-Ball
26	94-3903	1	Pinion-Drive, Pump
27	94-3994	1	Ring-Retaining

● Not illustrated

Ref.	Part Number	Qty.	Description
28	94-3905	1	Gear-Drive, Pump
29	94-3953	1	Nut-Hex
30	95-7875	1	Yoke-2 Speed
31	251-8	1	Bearing-Ball
32	94-3963	1	Ring-Retaining, EXT
33	94-3919	1	Pinion-Final
34		1	Coupling-Gear, Change ■
35		1	Coupling-2 Speed ■
36	95-2728	1	Spacer-Drive, Final
37	94-3997	3	Ring-Retaining
38	84-0310	1	Bearing-Ball
39	94-3960	1	Bearing-Ball
40	94-3942	1	Bearing-Ball
41	94-3904	1	Shaft-Pump
42	94-3906	1	Shaft-Motor
43	93-5381	1	Bracket
44	94-4004	23	Screw-HF
45	95-7038	1	Housing-HYD, Variable
46	94-3975	2	Pin
47	94-4058	1	Swashplate-Variable
48	75-0400	1	Plate-Thrust
49	94-3921	1	Plate-Valve
50	94-3956	1	Bearing-Ball
51	94-3974	2	Pin
52	94-3957	1	Bearing-Needle
53	94-3973	1	Plate-Valve

■ Not Serviced Separately.

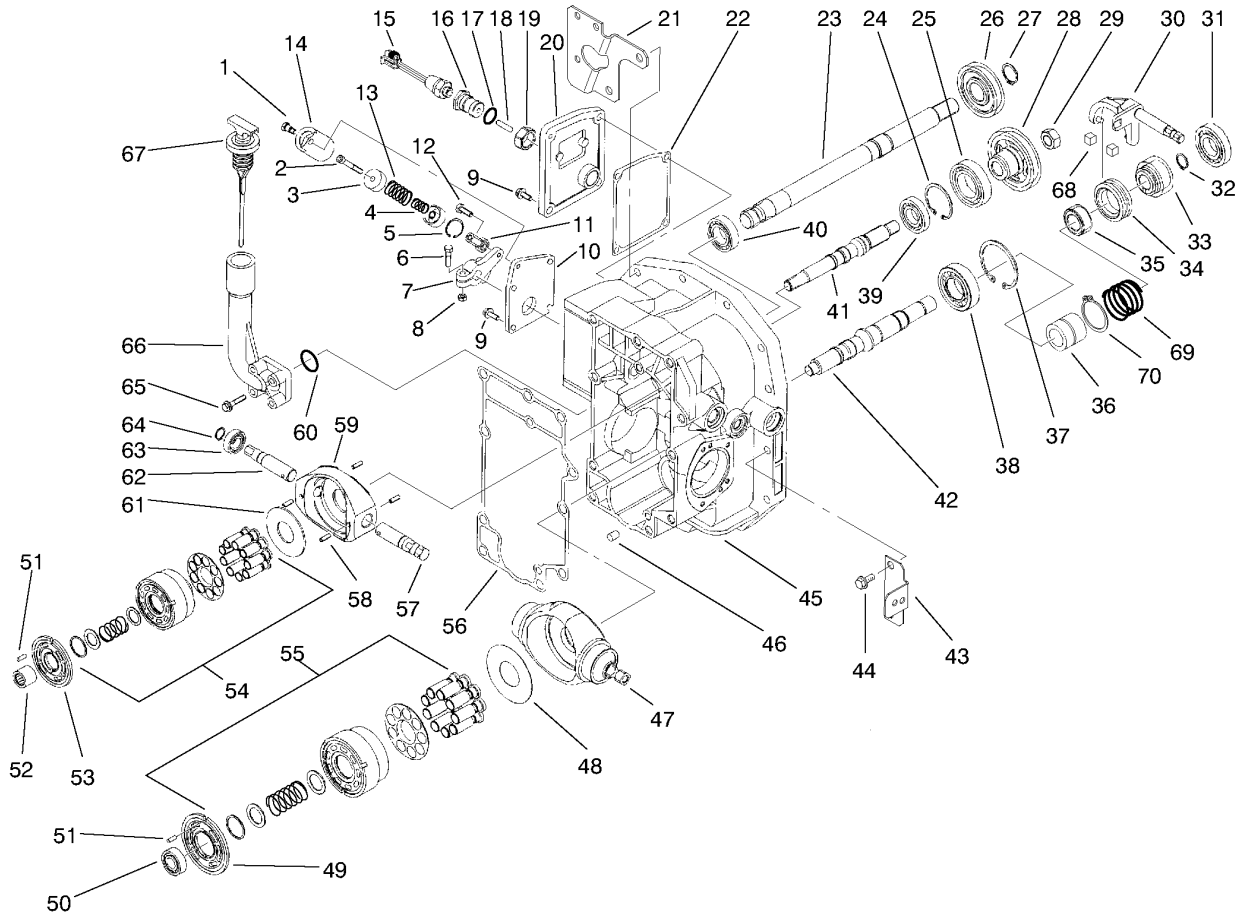

Hydraulic Housing Assembly (continued)

Ref.	Part Number	Qty.	Description
54	48-1800	1	Cylinder Block Kit
55	75-0470	1	Cylinder Block Kit
56	94-3992	1	Gasket-Section, Center
57	94-3946	1	Shaft-Trunnion
58	32121-91	4	Pin-Spring
59	94-3967	1	Swashplate-Pump, Variable
60	94-4051	1	O-Ring
61	94-3978	1	Plate-Thrust
62	94-3934	1	Shaft-Trunnion
63	94-4040	1	Bearing-Ball
64	94-3932	1	Ring-Retaining
65	94-4050	4	Screw-HF

Ref.	Part Number	Qty.	Description
66	94-4048	1	Housing-Dipstick
67	94-4049	1	Dipstick
68	95-7036	2	Guide-Slot
69	95-2730	1	Spring
70	95-2729	1	Ring-Retaining
	93-5969	1	Asm-Return, Neutral (Incl. Ref. #1-14) ●
	93-5971	1	Seal Overhaul Kit ●
	94-4149	1	Asm-Coupling, Gear Change (Incl. Ref. #34 & 35) ●

● Not illustrated

■ Not Serviced Separately.

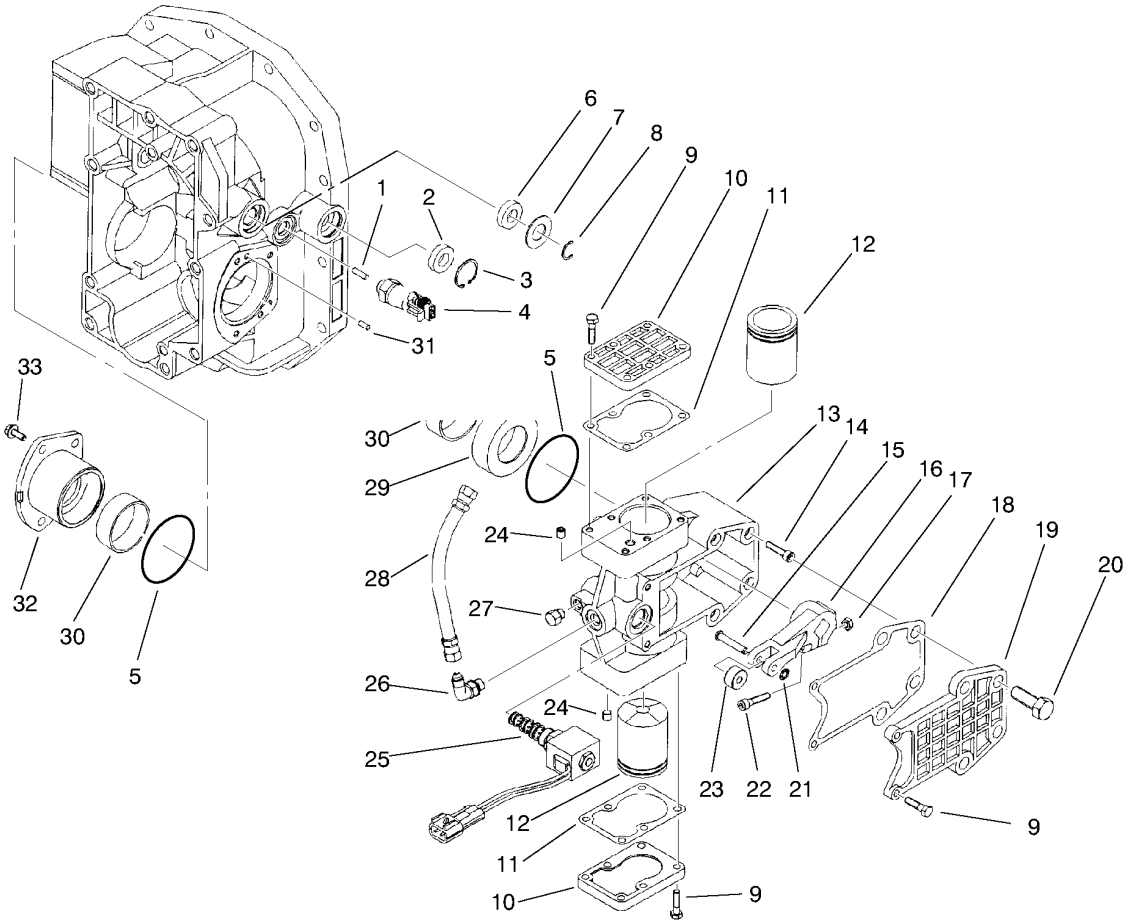

Hydraulic Housing Assembly-Control

Ref.	Part Number	Qty.	Description
1	94-4028	1	Roller-Needle
2	94-3939	1	Seal-Lip
3	94-3962	1	Ring-Retaining
4	95-7034	2	Switch-Netural
5	94-4059	2	O-Ring
6	25-3210	1	Seal-Lip
7	25-2510	1	Washer-Flat
8	94-3945	1	Ring-Retaining
9	95-7037	14	Screw
10	94-4063	2	Cover-Servo
11	95-7040	2	Gasket-Cover, Servo
12	94-4070	2	Piston-Control
13		1	Housing-Control
14	94-4009	4	Screw
15		1	Pin-Headed ●
16		1	Arm-Control ●
17	94-3936	1	Nut-Lock, Hex
18	95-7039	1	Gasket-Housing, Control
19	94-4065	1	Cover-Control
20	94-4007	4	Screw-HF
21		1	Washer-Retention, Shaft ●
22	94-4069	1	Screw
23		1	Roller-Arm, Control ●
24		2	Plug-Orifice ●
25	94-4072	1	Valve-Solenoid
26	94-4075	2	Elbow
27	94-4074	1	Plug
28	94-4076	1	Hose ASM
29		1	Carrier-Bearing, Trunnion ●
30		2	Bearing-Journal ●
31	69-3450	2	Pin
32		1	Carrier-Trunnion Bearing ●
33	94-4026	4	Screw-HF
	93-5968	1	Asm-Carrier, Trunnion Brg. (Incl. Ref. #30 & 32)
	93-5967	1	Asm-Carrier, Trunnion Brg. Mv (Incl. Ref. #29 & 30)
	95-7041	1	Asm-Control, Housing (Incl. Ref. #13, 24 & 27)
	94-9174	1	Asm-Arm, Control (Incl. Ref. #15-17 & 21-23)

● Not Serviced Separately.

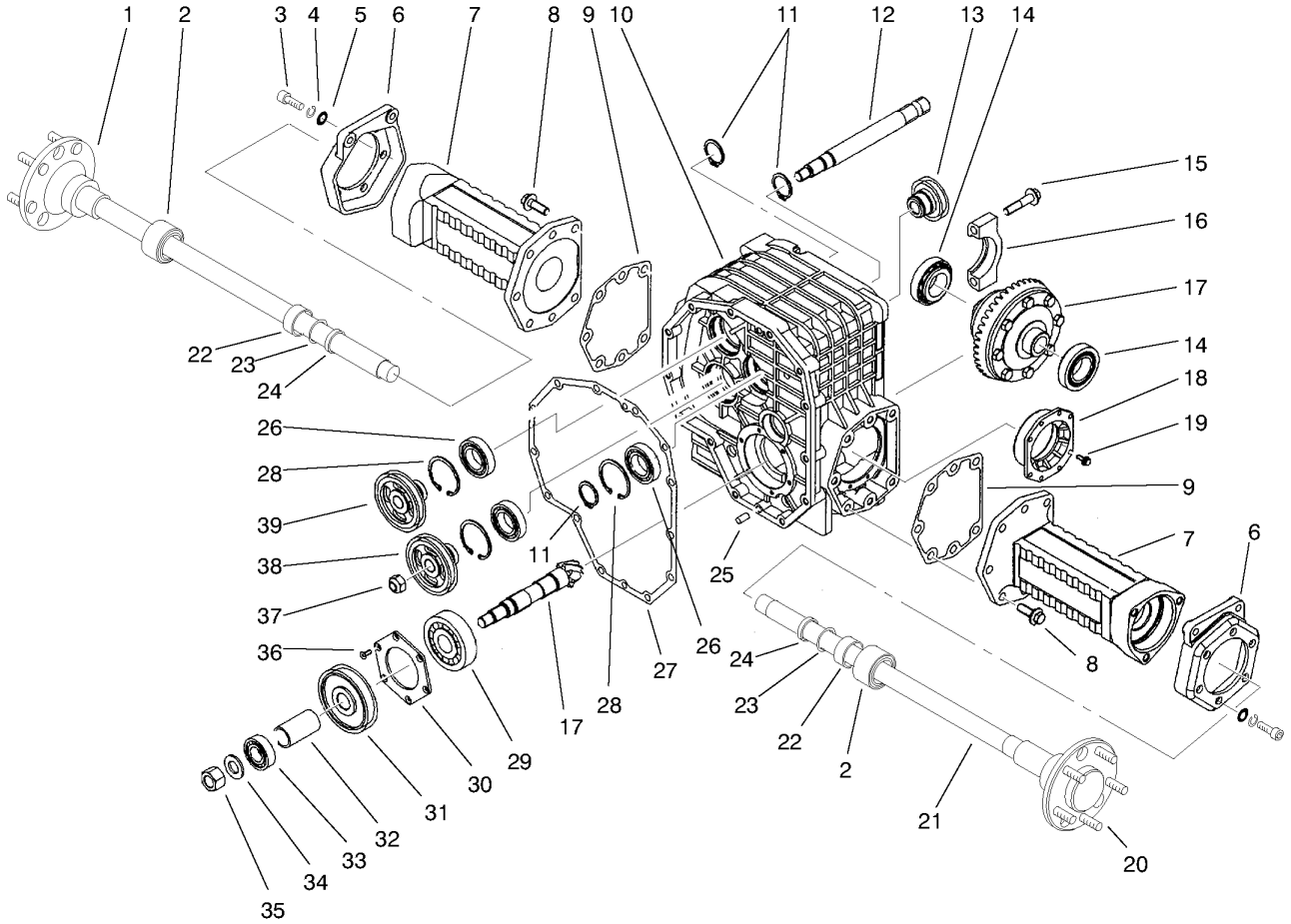

Front Axle Gear Housing Assembly

Ref.	Part Number	Qty.	Description
1	94-4031	1	Shaft-Axle
2	94-4030	2	Wheel Bearing ASM
3	94-4036	6	Screw
4	3253-7	6	Washer-Lock
5	3256-6	6	Washer-Flat
6	94-4038	2	Bracket-Brake
7	94-4033	2	Housing - Axle, Iht
8	94-4007	14	Screw-HF
9	94-4015	2	Gasket-Housing, Axle
10		1	Housing-Gear ●
11	69-3170	3	Ring-Retaining
12	94-3913	1	Shaft-Front, PTO
13	94-4052	1	Pinion-Clutch, PTO
14	93-5966	2	Bearing Kit
15	94-4003	2	Screw-HF
16		1	Clamp-Differential ●
17	94-3970	1	Asm-Differential
18		1	Carrier-Bearing ●
19	94-4002	6	Screw-HHF
20	94-4143	10	Stud-Wheel
21	94-4035	1	Shaft-Axle
22	94-4144	2	Collar-Bearing
23	94-4142	2	Ring-Retaining
24	94-4032	2	Seal-Lip

Ref.	Part Number	Qty.	Description
25	94-3975	4	Pin
26	94-3971	3	Bearing-Ball
27	94-3959	1	Gasket-Housing
28	94-3997	3	Ring-Retaining
29	94-3961	1	Bearing-Ball
31	94-3912	1	Gear-Drive, Final
32	94-3958	1	Spacer-Pinion
33	75-0520	1	Bearing-Ball
34	94-4024	1	Washer -.812 X 1.5 X .134
35	94-4025	1	Nut Hex Lock M20
36	98-1812	6	Screw
37	94-3953	1	Nut-Hex
38	94-3914	1	Shaft-Drive, PTO
39	94-3909	1	Pinion-Drive, PTO
	94-9175	1	Asm-Axle, LH (Incl. Ref. #1-9, 20 & 22-24)
	94-9176	1	Asm-Axle, RH (Incl. Ref. #2-9, & 20-24)
	94-9177	1	Asm-Housing, Gear (Incl. Ref. #10, 11,14-19, 26-30 & 36)
	94-9178	1	Kit-Bearing, Pinion Head (Incl. Ref. #29, 30 & 36)

● Not Serviced Separately.

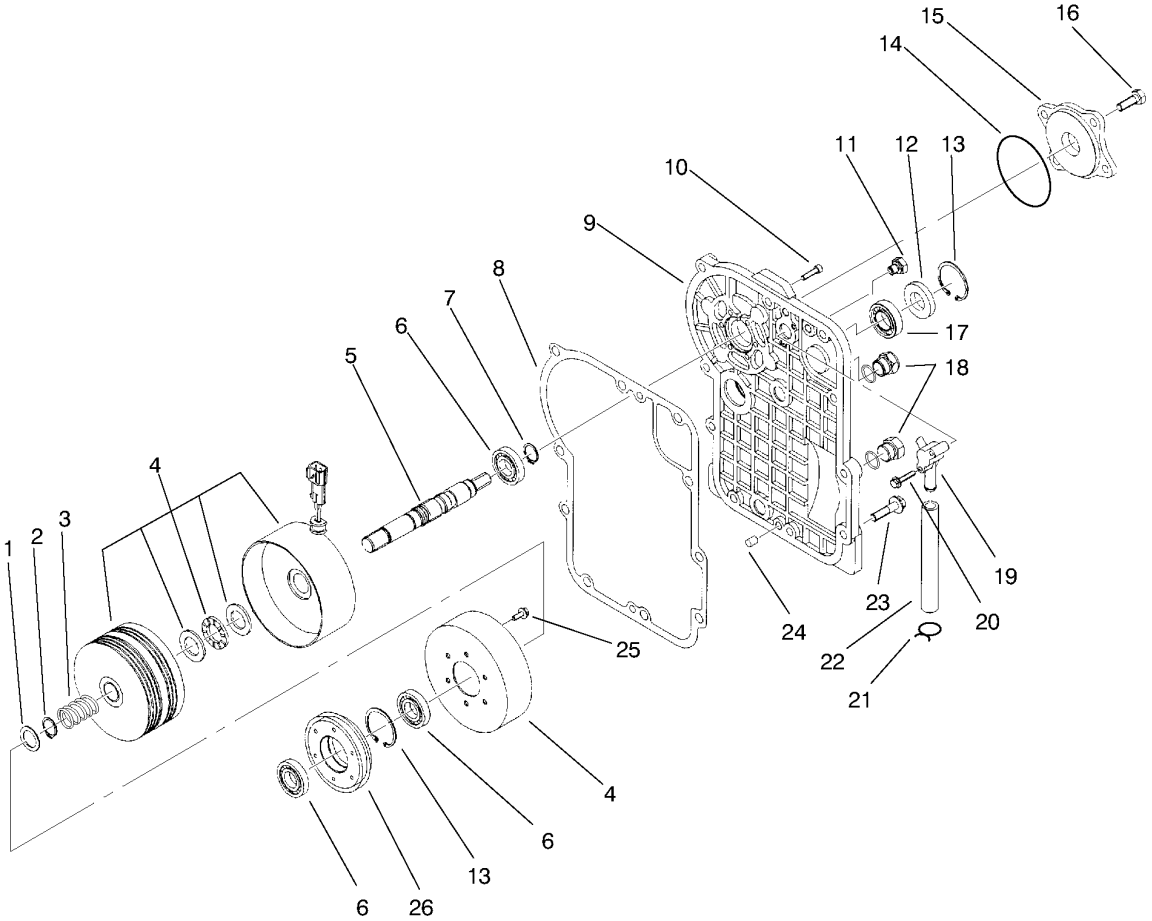

Front Axle Cover Assembly

Ref.	Part Number	Qty.	Description
1	94-3995	1	Washer
2	94-4006	1	Ring-Retaining
3	94-4005	1	Screw-Helical
4		1	Clutch-PTO ■
5	94-3910	1	Shaft-Clutch
6	94-3960	3	Bearing-Ball
7	94-3996	1	Ring-Retaining
8	94-4001	1	Gasket-Cover, Front
9		1	Cover-Front ■
10	94-4009	6	Screw
11	94-3998	1	Vent-Breather
12	94-3925	1	Seal-Lip
13	94-4029	2	Ring-Retaining, Int.
14	94-4011	1	O-Ring
15	94-4010	1	Cover-Gerotor
16	94-4008	4	Screw

Ref.	Part Number	Qty.	Description
17	94-3942	1	Bearing-Ball
18	67-8030	2	Plug ASM
19		1	Tube-Lubrication ■
20	95-7037	2	Screw
21		2	Clamp ■
22		1	Hose-Lubricating ■
23	94-4004	10	Screw-HF
24	94-3975	2	Pin
25	94-4026	6	Screw-HF
26	94-4053	1	Gear-Clutch, PTO
	94-9179	1	Asm-Clutch (Incl. Ref. #1-7, 13, 25 & 26) ●
	94-9180	1	Asm-Cover, Front (Incl. Ref. #9, 11,18, & 19-22) ●
	94-9181	1	Asm-Nozzle, Lubricating (Incl. Ref. #19, 21 &22) ●

● Not illustrated

■ Not Serviced Separately.

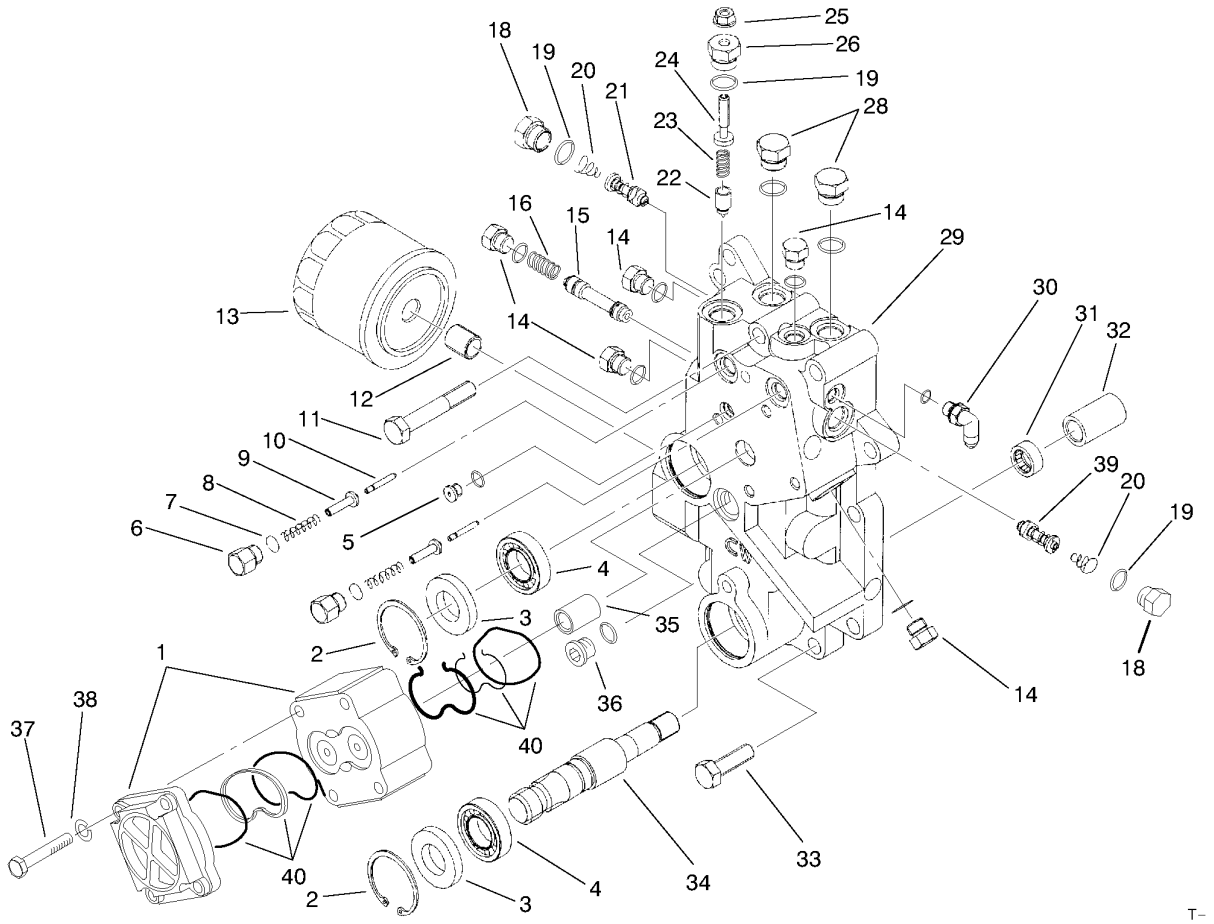

Front Axle Center Section Assembly

Ref.	Part Number	Qty.	Description
1	94-3968	1	Pump-Gear (Incl. Ref. #37, 38 & 40)
2	94-4029	2	Ring-Retaining, Int.
3	94-3925	2	Seal-Lip
4	94-3942	2	Bearing-Ball
5	75-0170	1	Plug-Thread, Straight
6	94-3986	2	Plug-HH
7	94-3987	2	O-Ring
9		2	Asm-Sleeve ■
11	94-3999	2	Screw
12	25-2660	1	Union-Filter
13	94-3951	1	Filter
14	69-3940	5	Plug-Threaded, Straight
15		1	Spool ■
16		1	Spring-Helical ■
18	75-0190	2	Plug-Special
19	75-0240	3	O-Ring
20	75-0140	2	Spring-Conical
21	94-3979	2	Valve
22		1	Cone-Valve, Relief ■
23		1	Spring-Helical ■
24		1	Screw-Adjusting ■
25	94-4017	1	Nut
26	94-3990	1	Plug-Implement, Relief
28	28-3440	2	Plug-Threaded

Ref.	Part Number	Qty.	Description
29		1	Center Section ■
30	94-4075	1	Elbow
31	94-4021	1	Bearing
32	94-4023	1	Coupling-4Wd
33	94-4020	8	Screw
34	94-4022	1	Shaft-4Wd
35	94-3922	1	Coupling-Pump, Gear
36	94-9172	1	Plug
37	94-9182	4	Screw
38	94-9183	4	Washer
39	84-0540	1	Valve
40	94-9184	1	Gear Pump Seal Kit
	95-7033	1	Asm-Center Section (Incl. Ref. #5-10, 12, 14-2.C &31) ●
	94-9168	1	Asm-Valve, Implement Relief (Incl. Ref. #19 & 22-26) ●
	94-9169	1	Kit-Scr Valve (6000 Psi) (Incl. Ref. #18-21) ●
	94-9170	1	Kit-Charge Press. Priority Valve (Incl. Ref. #14-16) ●
	94-9171	1	Kit-Valve, Easy Ride (Incl. Ref. #6-10) ●

● Not illustrated

■ Not Serviced Separately.

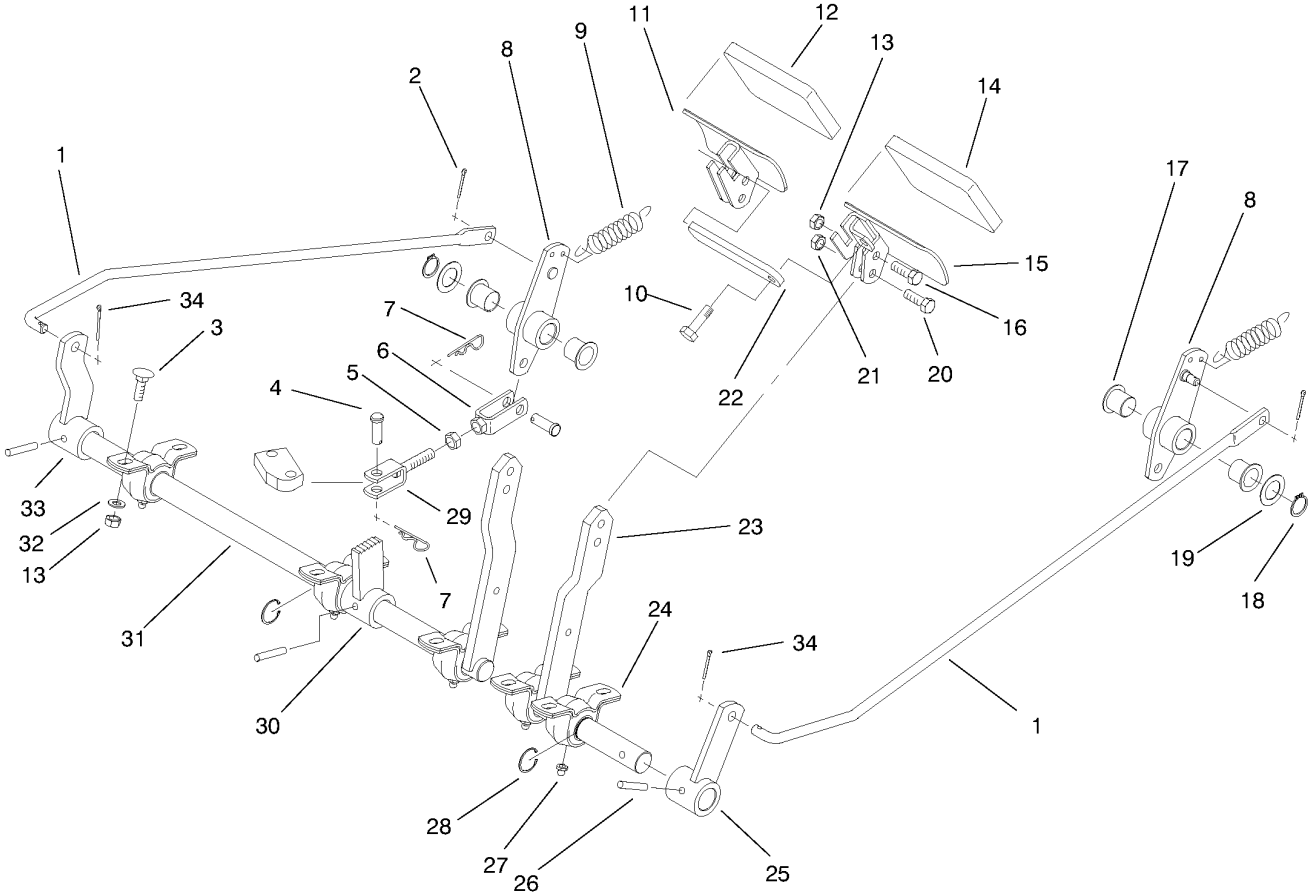

Brake Pedal Assembly

Ref.	Part Number	Qty.	Description
1	93-5333	2	Rod-Control
2	3272-7	2	Pin-Cotter
3	33124-020	10	Screw-CARR
4	283-2	4	Pin-Clevis
5	3220-3	2	Nut-HJ
6	93-5552	2	Clevis
7	3290-467	4	Pin-Hair
8	93-5326	2	Bellcrank
9	93-5262	2	Spring-Extension
10	33114-020	1	Screw-HH
11	93-5456	1	Pedal-RH
12	27-7580	1	Pad-Turn, Right
12	93-8742	1	Footpad-Brake
13	33024-00	14	Nut-Lock
14	27-7570	1	Pad-Turn, Left
14	93-8742	1	Footpad-Brake
15	93-5455	1	Pedal-LH
16	33114-025	3	Screw-HH

Ref.	Part Number	Qty.	Description
17	93-5313	4	Bushing-Nylon
18	32120-72	2	Ring-Snap
19	3-6498	2	Washer-Thrust
20	322-4	1	Screw-HH
21	3218-2	1	Nut-Jam
22	93-5568	1	Arm-Lock
23	93-5280	1	Arm-Brake, LH
24	93-4849	5	Bearing-Block, Pillow
25	93-5473	1	Lever-Brake, LH
26	32121-15	3	Pin-Roll
27	302-5	5	Fitting-Grease
28	32151-83	3	Ring-Snap
29	93-5551	2	Clevis
30	93-5475	1	Latch-Brake
31	93-5284	1	Arm-Brake, RH
32	33094-00	10	Washer-Plain
33	93-5474	1	Lever-Brake, RH
34	3272-10	2	Pin-Cotter

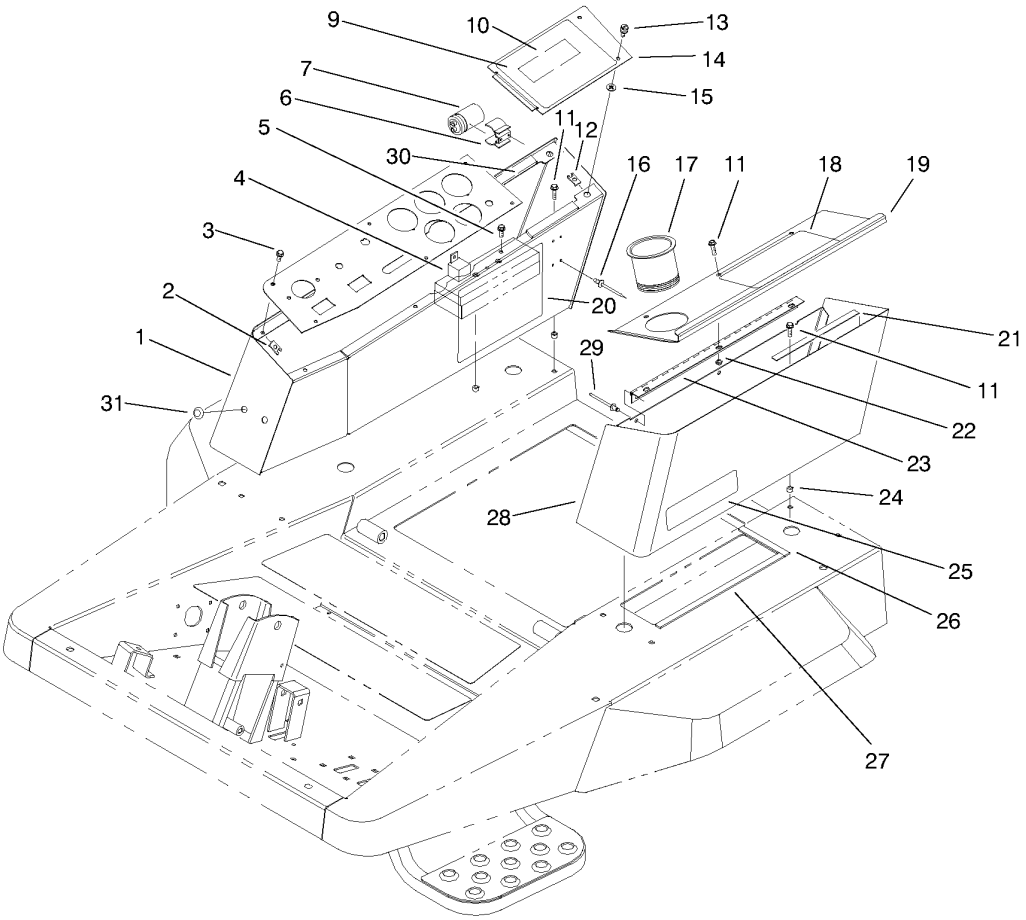

Control Console Assembly

Ref.	Part Number	Qty.	Description
1	93-5369	1	Console
2	3290-191	6	Nut-Speed
3	3250-14	6	Screw-PPH
4	116397	7	Relay
5	93-5949	2	Screw-Machine
6	74-2310	2	Clamp-Plastic
7	37-2690	2	Capacitor
9	93-5930	1	Decal-Operating Instructions
9	94-6323	1	Decal-Operator Instruction, Ce
10	93-5932	1	Decal Fuses, Diesel
10	93-5624	1	Decal-Fuses, Ce
11	33103-016	12	Screw-HHF
12	93-5558	2	Nut-On, Clip
13	93-5556	2	Screw-Knurled
14	93-5527	1	Panel-Access
15	93-5557	2	Retainer-Nylon
16	117433	2	Rivet-Pop
17	94-1410	1	Holder-Can, Beverage
18	93-5621	1	Decal - Warning

Ref.	Part Number	Qty.	Description
18	93-5620	1	Decal-Warning
19	93-5403	1	Cover-Console
20	93-5934	1	Decal-Service
21	66-3050	2	Latch-Box, Tool
22	33003-00	3	Nut-HF
23	93-5554	1	Hinge-Cover
24	93-5447	8	Nut-Clinch
25	67-1710	1	Decal-Warning
25	93-7252	1	Decal-Ce Mark
26	93-5413	2	Strip-Foam
27	93-5414	2	Strip-Foam
28	93-5399	1	Console-LH
29	93-8744	3	Rivet-Blind
30	93-5637	2	Strip-Foam
31	93-5992	2	Plug
	218-574	1	Fuse-7.5 Amp ●
	218-578	1	Fuse-10 Amp ●
	218-594	2	Fuse-20 Amp ●
	94-4109	1	Fuse - 80A ●
	92-3188	2	Diode-Board, Circuit ●

● Not illustrated

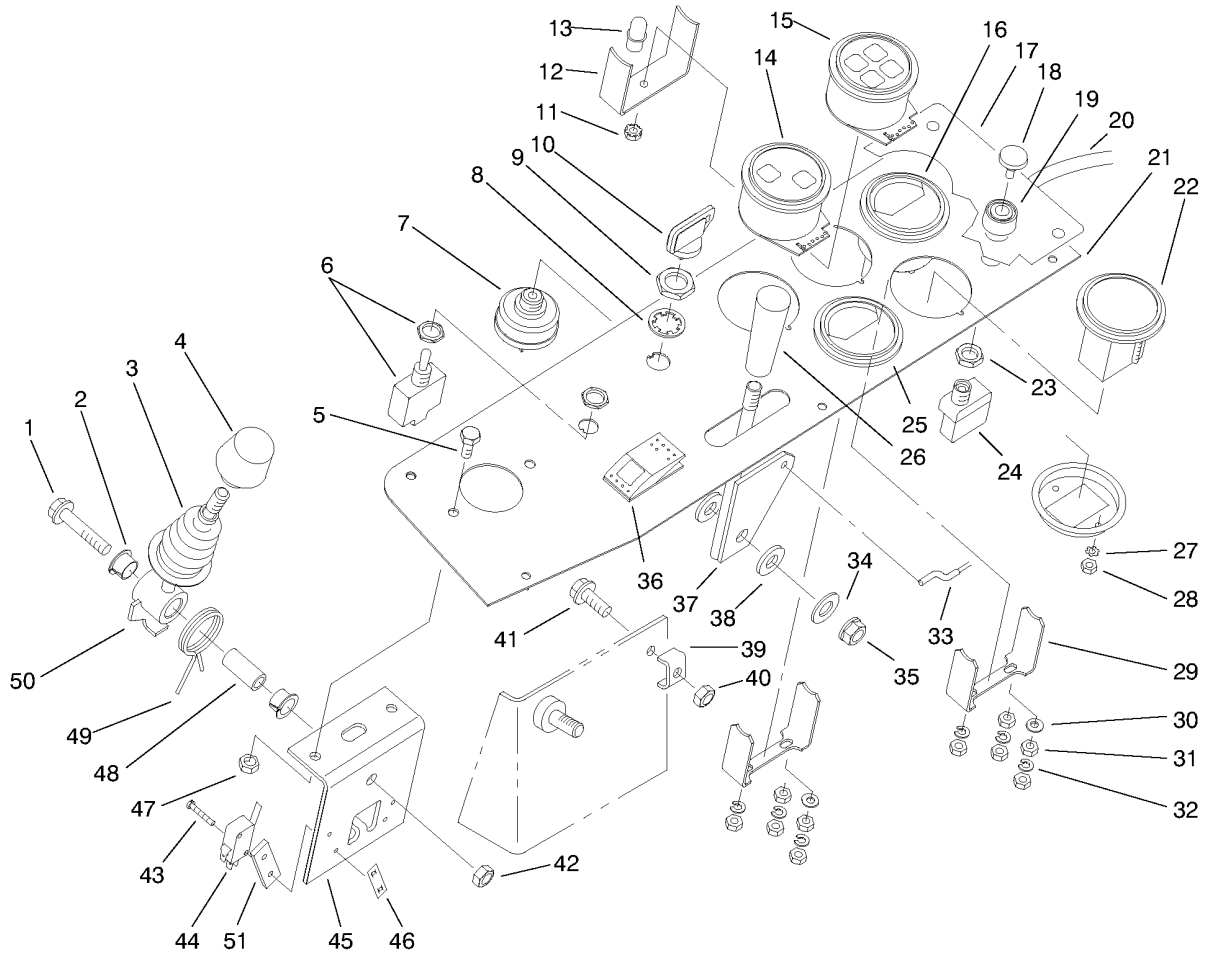

Operator-S Control Console Assembly

Ref.	Part Number	Qty.	Description
1	33104-040	1	Screw-HHF
2	93-5547	2	Bushing-Nylon
3	93-5961	1	Boot-Lever
4	233-37	1	Knob
5	33103-016	2	Screw-HHF
6	93-5270	1	Switch-PTO
7	27-2360	1	Switch-Ignition (Incl. Ref. #8-9)
8	218-447	1	Washer-Lock
9	218-446	1	Nut-Hex
10	62-7770	1	Key-Ignition
11		1	Nut-Keps
12		1	Clamp
13		4	Bulb-Light
14	93-5481	1	Cluster-Light, Warning
15	93-5478	1	Cluster-Light, Warning
16	76-9060	1	Gauge-Temperature
17	93-5425	1	Decal-Control, Dl
18	43-6280	1	Button-Push
19	43-6420	1	Bezel
20	93-5518	1	Wire Harness
21	93-5376	1	Plate-Control
22	66-2950	1	Gauge-Hourmeter
23	218-498	1	Nut-Lock
24	72-9760	1	Switch
25	66-2940	1	Gauge-Fuel

Ref.	Part Number	Qty.	Description
26	233-39	1	Knob-Control
27	3255-20	2	Washer-Lock
28	3217-25	2	Nut-Hex
29		2	Clamp
30	3256-14	4	Washer-Flat
31	3219-14	12	Nut-Hex
32	3253-2	10	Washer-Lock
33	93-5350	1	Cable-Throttle
34	3256-24	1	Washer-Flat
35	95-1579	1	Nut-Lock
36	93-5476	1	Switch-Carling
37	93-5373	1	Lever-Throttle
38	66-2920	2	Washer-Friction
39	29-9550	1	Clamp-Cable
40	33003-00	1	Nut-HF
41	33103-016	1	Screw-HHF
42	33024-00	1	Nut-Lock
43	3290-329	4	Screw-PPH
44	111332	2	Switch
45	93-5991	1	Bracket
46	3290-354	2	Nut-Speed
47	33023-00	2	Nut-Lock
48	93-5512	1	Spacer
49	93-5509	1	Spring-Tension
50	93-5515	1	Lever
51	61-2990	2	Spacer

● Not illustrated

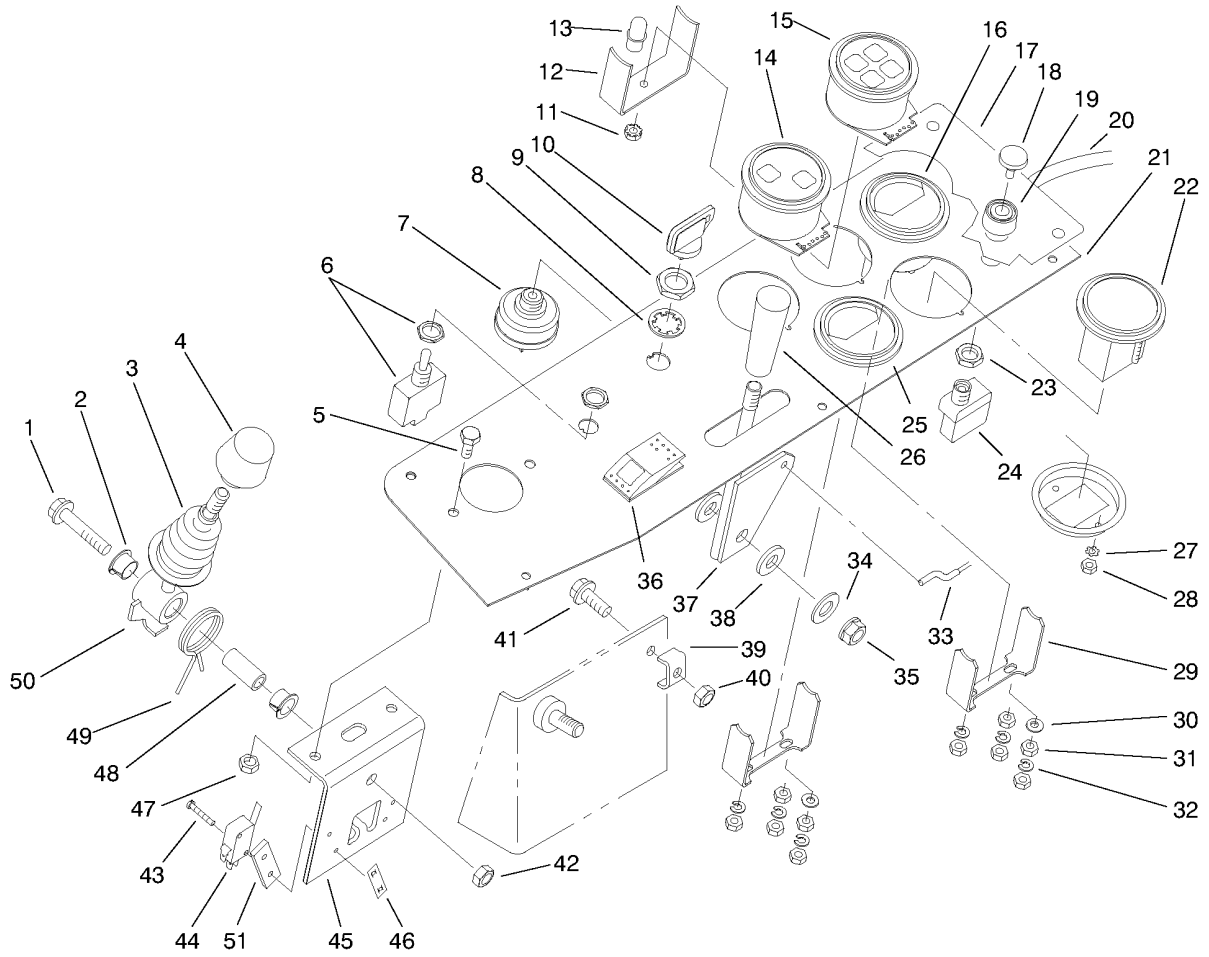

Operator-S Control Console Assembly (continued)

Ref.	Part Number	Qty.	Description
	95-5923	1	Harness - Wire Peugot ●
	94-9967	1	Circuit Breaker ●

● Not illustrated

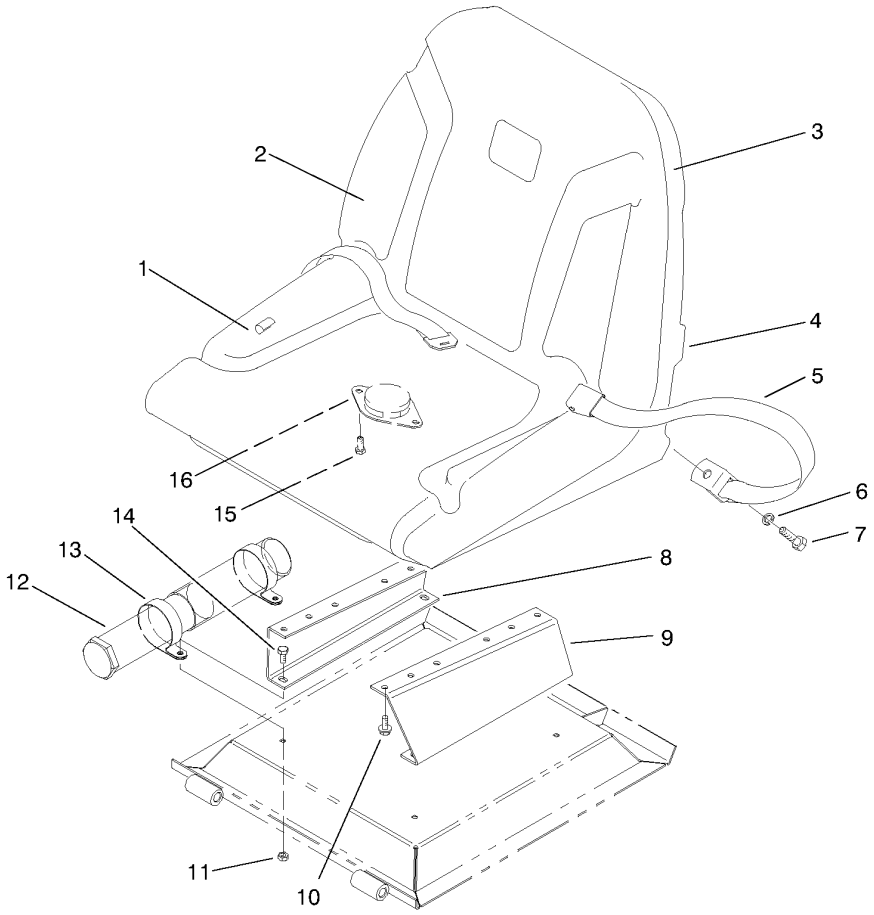

Seat Assembly

Ref.	Part Number	Qty.	Description
1	351-80	1	Clip
2	92-6533	1	Kit-Cushion, Seat
3	351-78	1	Edging
4	92-6534	1	Shell
5	72-9390	1	Belt-Seat
6	3253-6	2	Washer-Lock
7	3212-4	2	Screw-HH
8	93-5599	1	Bracket-Seat, RH
9	93-5600	1	Bracket-Seat, LH
10	3234-5	4	Screw-HHF
11	33024-00	4	Nut-Lock
12	74-0720	1	Tube-Manual
13	2412-133	2	R-Clamp
14	33114-016	4	Screw-HH
15	321-3	2	Screw-HH
16	92-6282	1	Switch-Seat
	92-6280	1	Asm-Seat (Incl. Ref. 1-4 & 15-16) ●

● Not illustrated

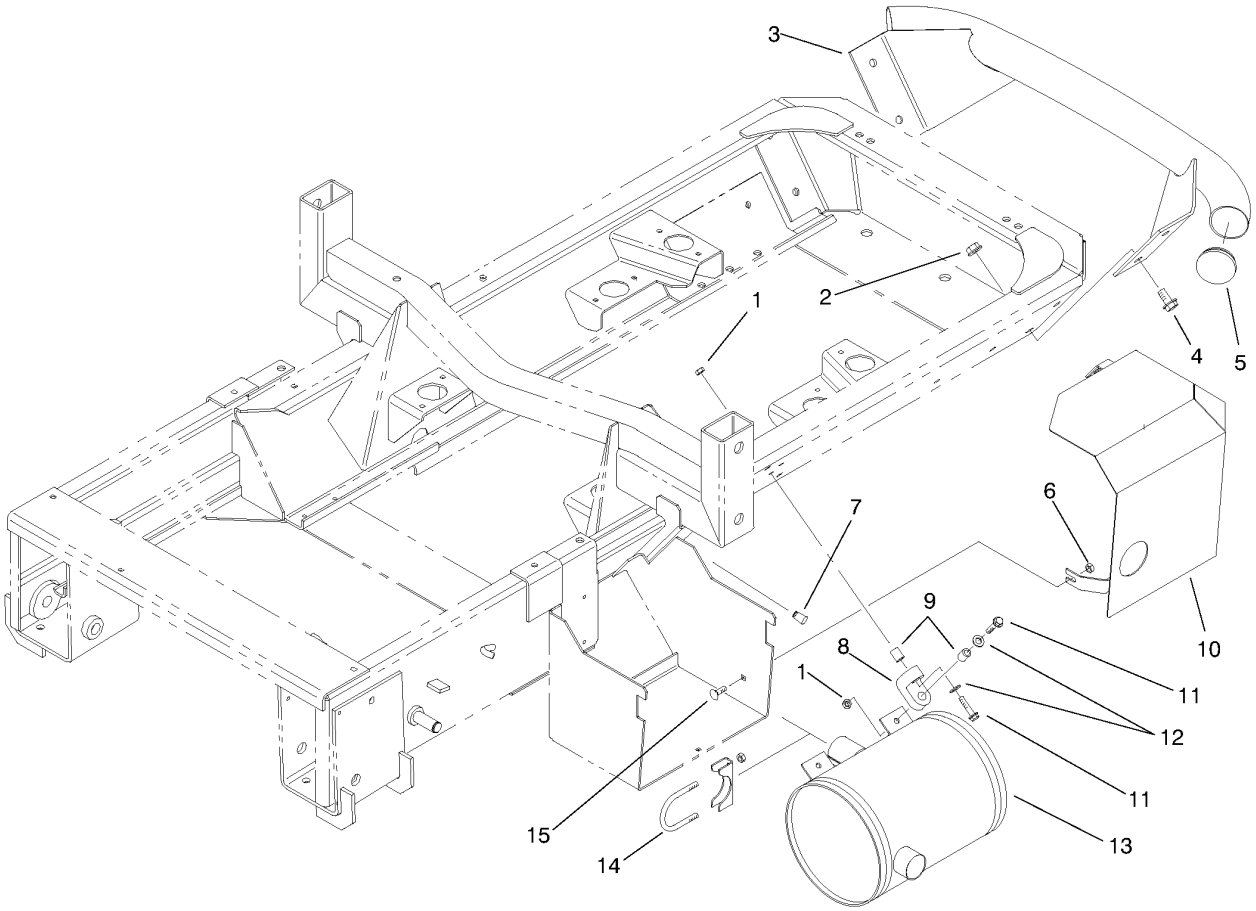

Muffler and Rear Bumper Assembly

Ref.	*Part Number*	*Qty.*	*Description*
1	33024-00	3	Nut-Lock
2	33006-00	4	Nut-HF
3	93-5440	1	Bumper
4	33106-025	4	Screw-HHF
5	2410-42	2	Cap-End
6	33004-00	3	Nut-HF
7	93-5450	1	Nut-Clinch
8	95-5622	2	Hanger-Rubber
9	93-5023	4	Spacer
10	93-5594	1	Guard-Muffler
11	33104-035	4	Screw-HHF
12	3256-3	4	Washer-Flat
13	93-5946	1	Muffler W/ Spark Arrestor
14	2112-6	1	Clamp-Muffler
15	33124-020	3	Screw-CARR

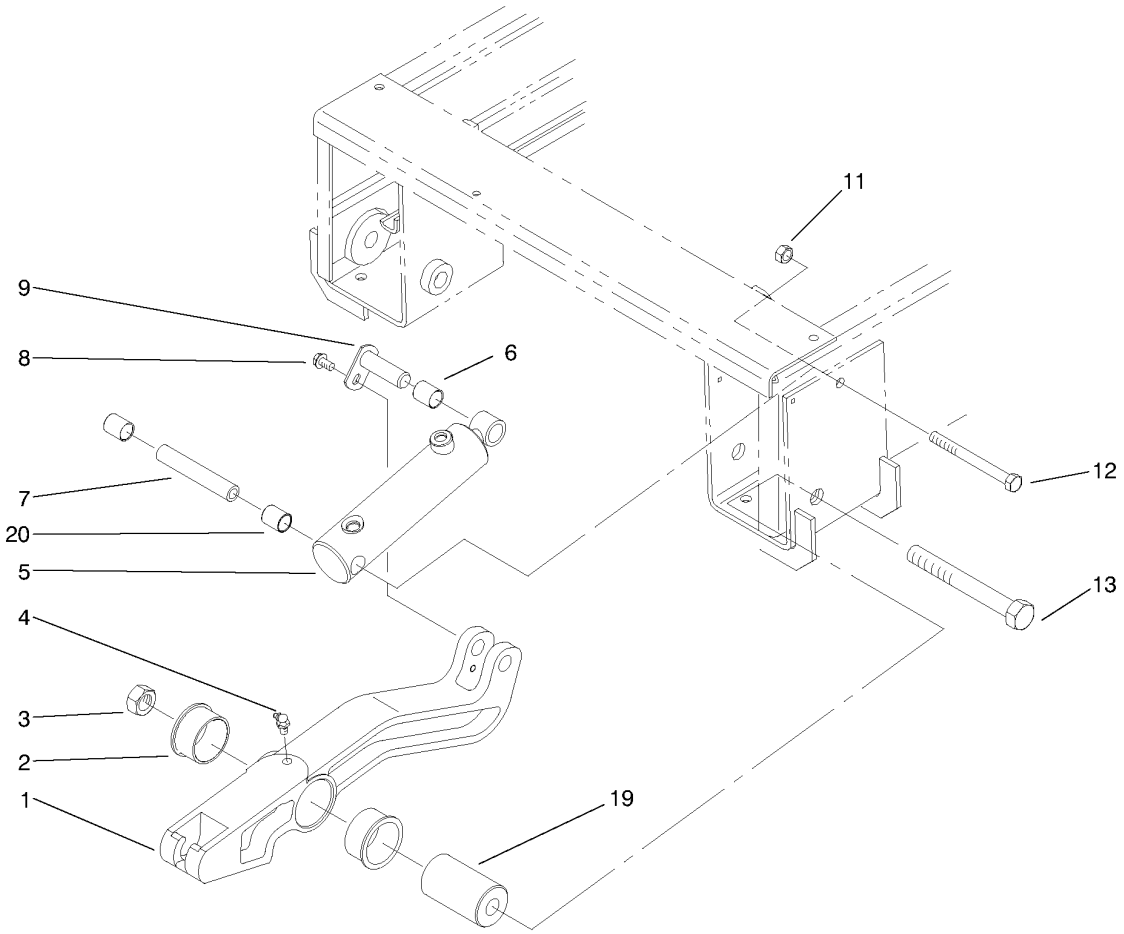

Lift Arm Assembly

Ref.	*Part Number*	*Qty.*	*Description*
1	93-4868	1	Arm-Lift, LH
	93-4867	1	Arm-Lift, RH ●
2	93-4665	4	Bushing-Flange
3	33019-00	2	Nut-Hex
4	302-33	2	Fitting-Grease
5	95-5604	2	Cylinder-Hydraulic
6	93-4639	2	Bushing
7	95-9646	2	Spacer - Cylinder
8	33104-016	2	Screw-HHF
9	93-4630	2	Pin
11	33026-00	2	Nut-Lock
12	33116-140	2	Screw-HH
13	33119-160	2	Screw-HH
14	33103-020	2	Screw-HHF
19	93-4587	2	Spacer-Pivot
20	95-9645	4	Bushing

● Not illustrated

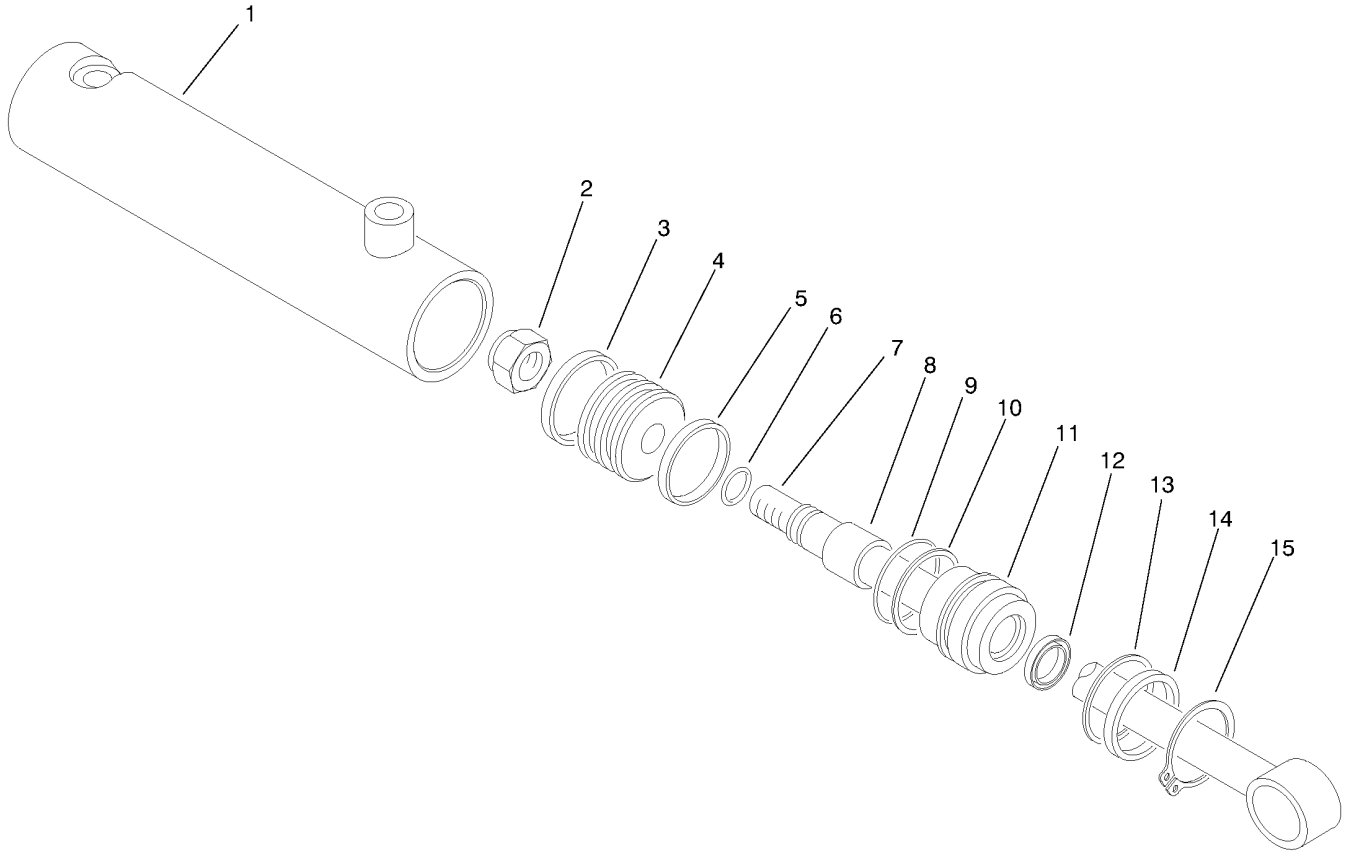

Hydraulic Cylinder Assembly No. 95-5604

Ref.	*Part Number*	*Qty.*	*Description*
1	95-5606	1	Tube ASM
2	93-5607	1	Nut - Lock
3		1	Seal-Piston
4	95-5605	1	Asm-Piston (Incl. Ref. #3 & 5)
5		1	Ring-Wear
7	95-5607	1	Asm-Rod
11	93-5611	1	Asm-Head (Incl. Ref. #8-10 & 12)
12		1	Wiper
13	93-5612	1	Lock Ring - Internal
14	93-5613	1	Spacer
15	93-5614	1	Lock Ring - External
	93-5493	1	Kit-Repair, Seal (Incl. Ref. #3, 5, 6, 9, 10 & 12) ●

● Not illustrated

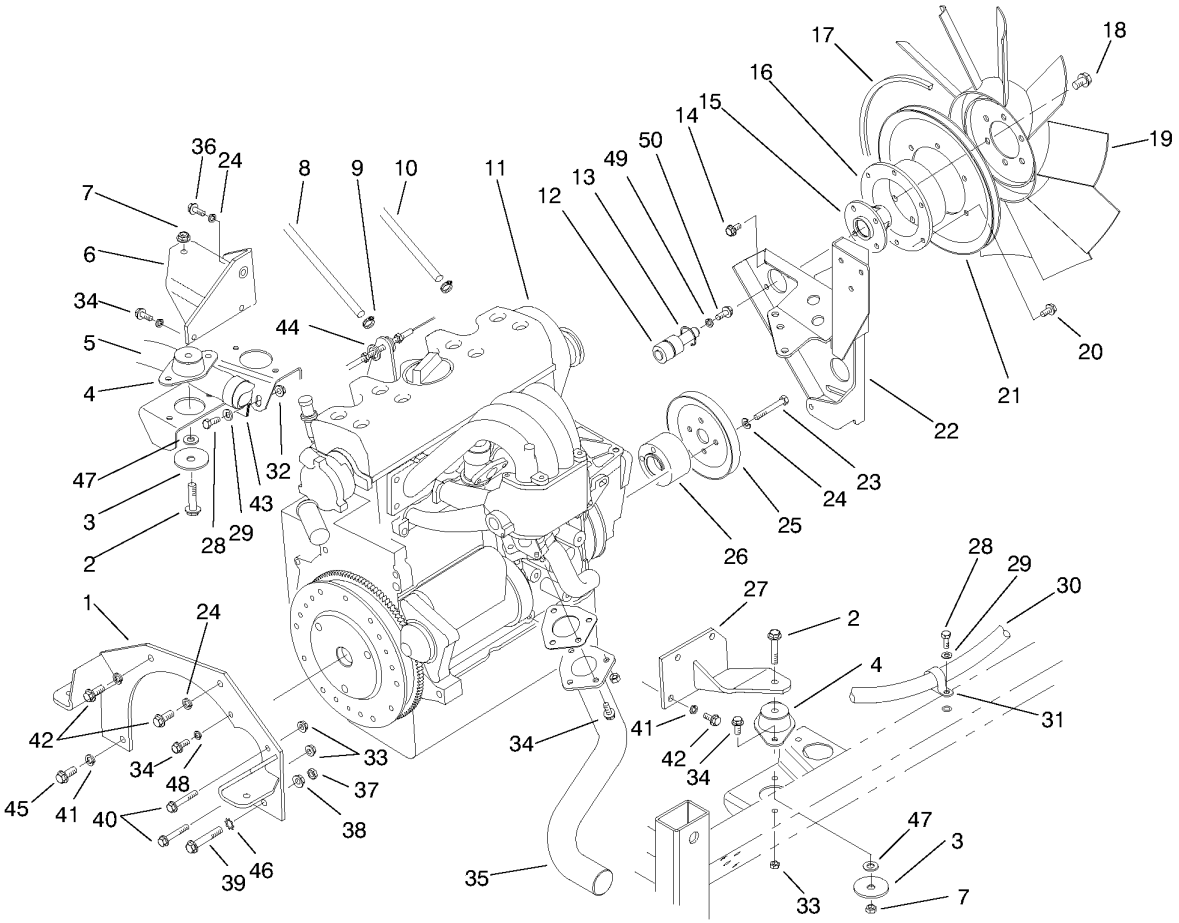

Engine Mount Assembly

Ref.	Part Number	Qty.	Description
1	93-5055	1	Plate-Engine, Front
2	33105-060	4	Screw-HHF
3	87-5100	4	Washer-Snubbing
4	93-5265	4	Mount-Engine
5	93-5596	1	Hose-Radiator, Lower
6	93-5059	1	Mount-Engine, RH
7	33025-00	4	Nut-Lock
8	93-5485	1	Hose-Fuel
9	2412-108	2	Clamp-Worm
10	93-5482	1	Hose - Fuel
11	93-5389	1	Engine-Peugeot
12	98-3578	1	Bearing
13	32120-10	1	Ring-Snap
14	33104-016	4	Screw-HHF
15	93-5187	1	Hub-Fan
16	93-5545	1	Hub-Fan
17	95-5618	1	Belt
18	33105-020	6	Screw-HHF
19	93-5114	1	Fan
20	33114-016	6	Screw-HH
21	96-1267	1	Pulley-Fan
22	93-5166	1	Bracket-Fan
23	33114-060	4	Screw-HH
24	3253-4	7	Washer-Lock
25	93-5192	1	Pulley-Crank
26	93-5196	1	Spacer-Crank
27	93-5062	1	Mount-Engine, LH
28	33114-020	2	Screw-HH
29	3256-23	2	Washer-Flat
30	93-5537	1	Hose-Peugeot
31	2412-104	1	R-Clamp
32	33004-00	1	Nut-HF
33	33024-00	3	Nut-Lock
34	33104-020	4	Screw-HHF
35	93-5049	1	Pipe-Exhaust
36	33104-035	1	Screw-HHF
37	33015-00	1	Nut-Hex
38	33005-00	1	Nut-HF
39	71-4690	1	Screw-HH
40	33104-050	2	Screw-HHF
41	3253-6	6	Washer-Lock
42	33105-025	5	Screw-HHF
43	2412-127	1	Clamp-R
44	86-2990	2	Mount-Cable, Throttle
45	33105-035	1	Screw-HHF
46	3255-9	1	Washer-Lock
47	33095-00	4	Washer-Flat
48	3255-8	1	Washer-Lock
49	3256-24	1	Washer-Flat
50	3234-25	1	Screw-HHF

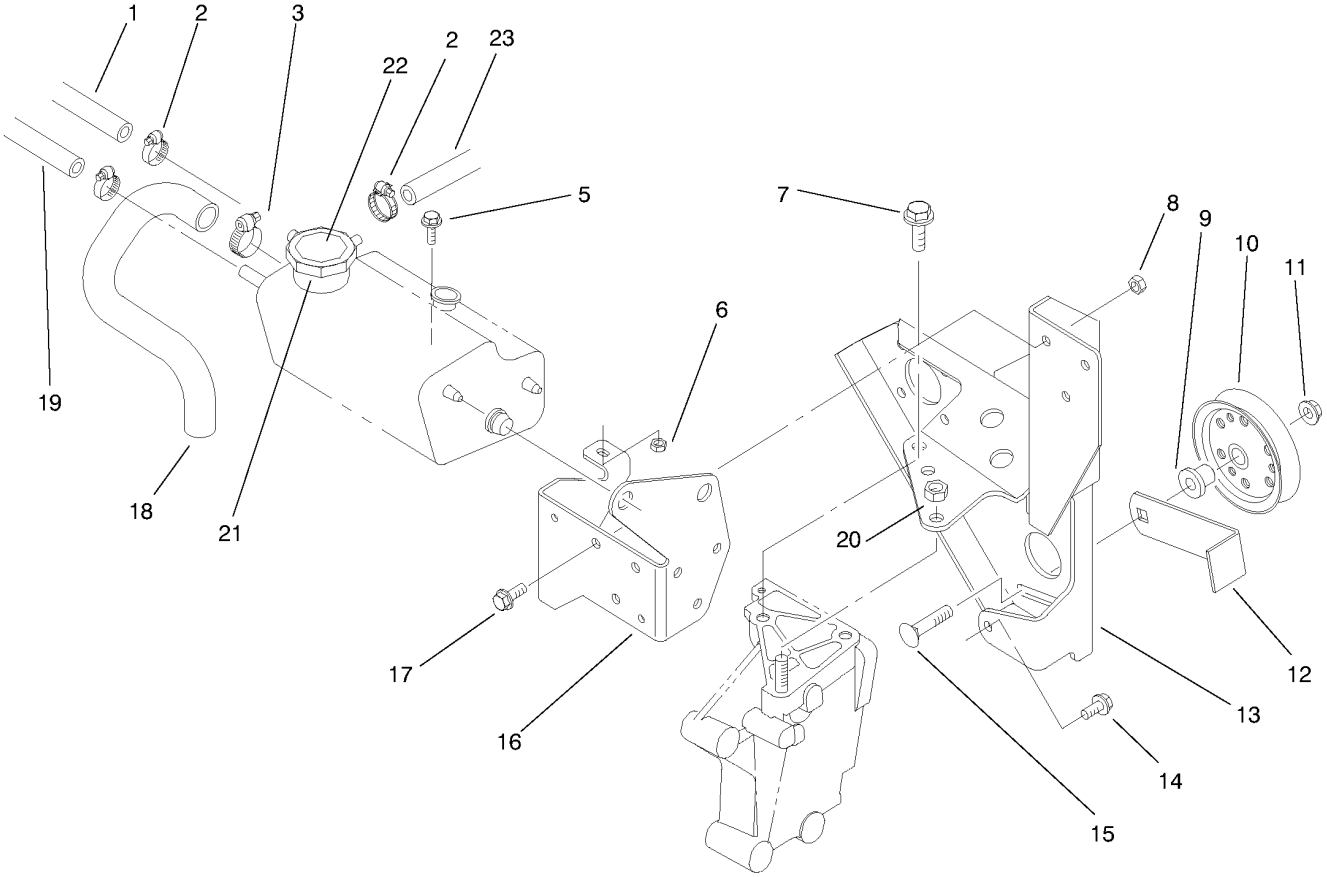

Fan Bracket and Degasser Assembly

Ref.	*Part Number*	*Qty.*	*Description*
1	93-5539	1	Hose-Peugeot
2	2412-36	4	Clamp-Hose
3	2412-141	2	Clamp-Drive, Worm
5	33103-020	1	Screw-HHF
6	33023-00	1	Nut-Lock
7	33105-020	1	Screw-HHF
8	33024-00	3	Nut-Lock
9	93-5197	1	Spacer-Idler
10	93-5194	1	Pulley-Idler
11	33005-00	1	Nut-HF
12	93-5504	1	Lever
13	93-5166	1	Bracket-Fan
14	33104-020	1	Screw-HHF
15	33125-040	1	Screw-CARR
16	93-5096	1	Bracket-Degasser
17	33104-020	3	Screw-HHF
18	93-5536	1	Hose-Degasser
19	93-5538	1	Hose-Peugeot
20	33025-00	1	Nut-Lock
21	94-2800	1	Cap-Pressure
21	66-3240	1	Cap-Radiator
22	93-7840	1	Decal-Cap, Radiator
23	63-7628	1	Hose-Fuel

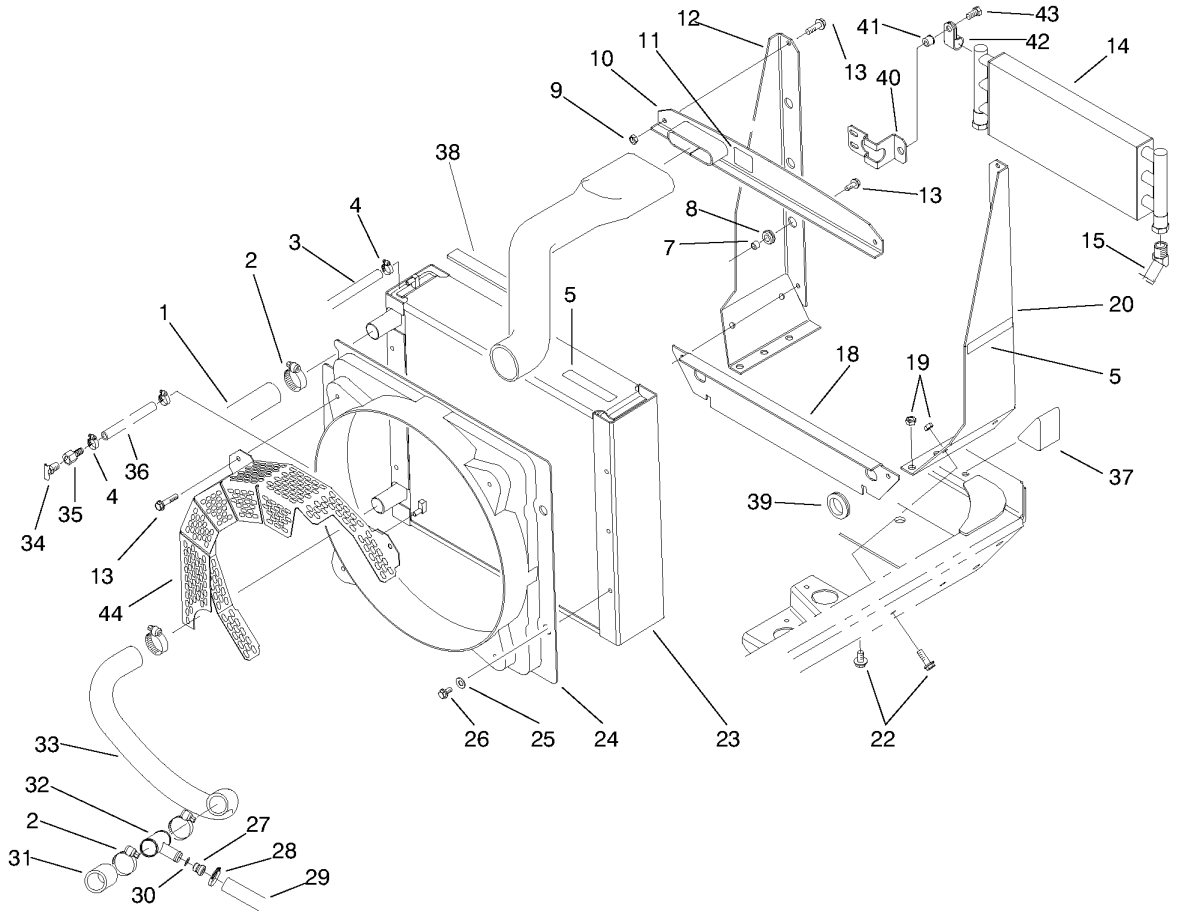

Radiator and Cooler Assembly

Ref.	Part Number	Qty.	Description
1	93-5595	1	Hose-Radiator, Upper
2	2412-111	6	Clamp
3	93-5538	1	Hose-Peugeot
4	2412-108	3	Clamp-Worm
5	77-3100	3	Decal-Warning
5	93-7272	3	Decal-Warning
7	93-5109	6	Spacer
8	93-5108	6	Grommet-Rubber
9	33024-00	4	Nut-Lock
10	93-5100	1	Support-Upper, Radiator
11	83-9150	1	Decal-Fluid, Starting
11	93-7275	1	Decal-Fluid, Starting
12	93-5104	1	Support-RH, Radiator
13	33104-020	13	Screw-HHF
14	63-5400	1	Exchanger-Heat
15	95-5629	2	Fitting-45 DEG
18	95-0987	1	Support-Lower, Radiator
19	33025-00	4	Nut-Lock
20	93-5105	1	Support-LH, Radiator
22	33105-030	4	Screw-HHF
23	93-5942	1	Radiator

Ref.	Part Number	Qty.	Description
24	93-5034	1	Shroud-Radiator
25	3256-35	4	Washer-Flat
26	33104-016	4	Screw-HHF
27	93-5054	1	Fitting-Restriction
28	2412-141	2	Clamp-Drive, Worm
29	93-5537	1	Hose-Peugeot
30	93-5392	1	O-Ring
31	93-5597	1	Hose-Radiator
32	93-5053	1	Fitting-Radiator
33	93-5596	1	Hose-Radiator, Lower
34	93-5528	1	Fitting-Cock, Drain
35	354-94	1	Fitting-Female, Barbed
36	18-2080	1	Pwr Steer Return Hose
37	93-5954	2	Foam-Plug
38	95-0698	1	Strip-Foam
39	240-3	2	Grommet-Rubber
40	95-0972	2	Bracket-Mount, Cooler
41	32148-9	2	Insert-Nut
42	2412-81	2	Clamp-R
43	323-6	2	Screw-HH
44	98-0663	1	Guard-Fan (Europe)

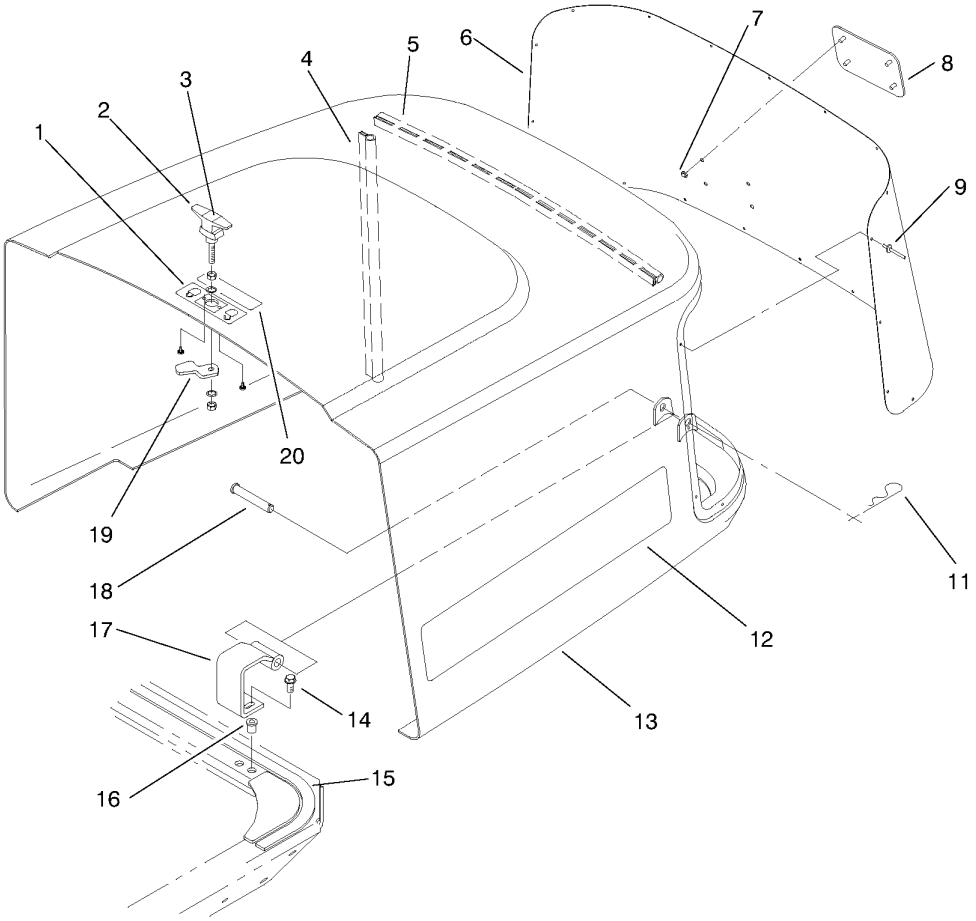

Hood Assembly

Ref.	Part Number	Qty.	Description
1	94-6328	1	Decal-Lock, Hood
2	93-5570	1	Handle-Latch (Incl. Ref. #19)
3	94-6329	1	Decal-Arrow
4	93-5250	2	Seal-Bulb, Side
5	93-5251	1	Seal-Bulb, Top
6	93-5229	1	Screen-Rear
7	94-2638	4	Nut-Tinnerman
8	93-6028	1	Plate-Logo
9	95-3428	22	Rivet
11	3290-467	2	Pin-Hair
12	93-5422	2	Decal-Hood
13	93-5086	1	Hood ASM
14	33104-020	4	Screw-HHF
15	93-5254	1	Strip-Foam, Rear
16	93-5450	4	Nut-Clinch
17	93-5093	2	Pivot-Hood
18	283-55	2	Pin-Clevis
19	93-5566	1	Arm-Latch
20	93-7272	1	Decal-Warning

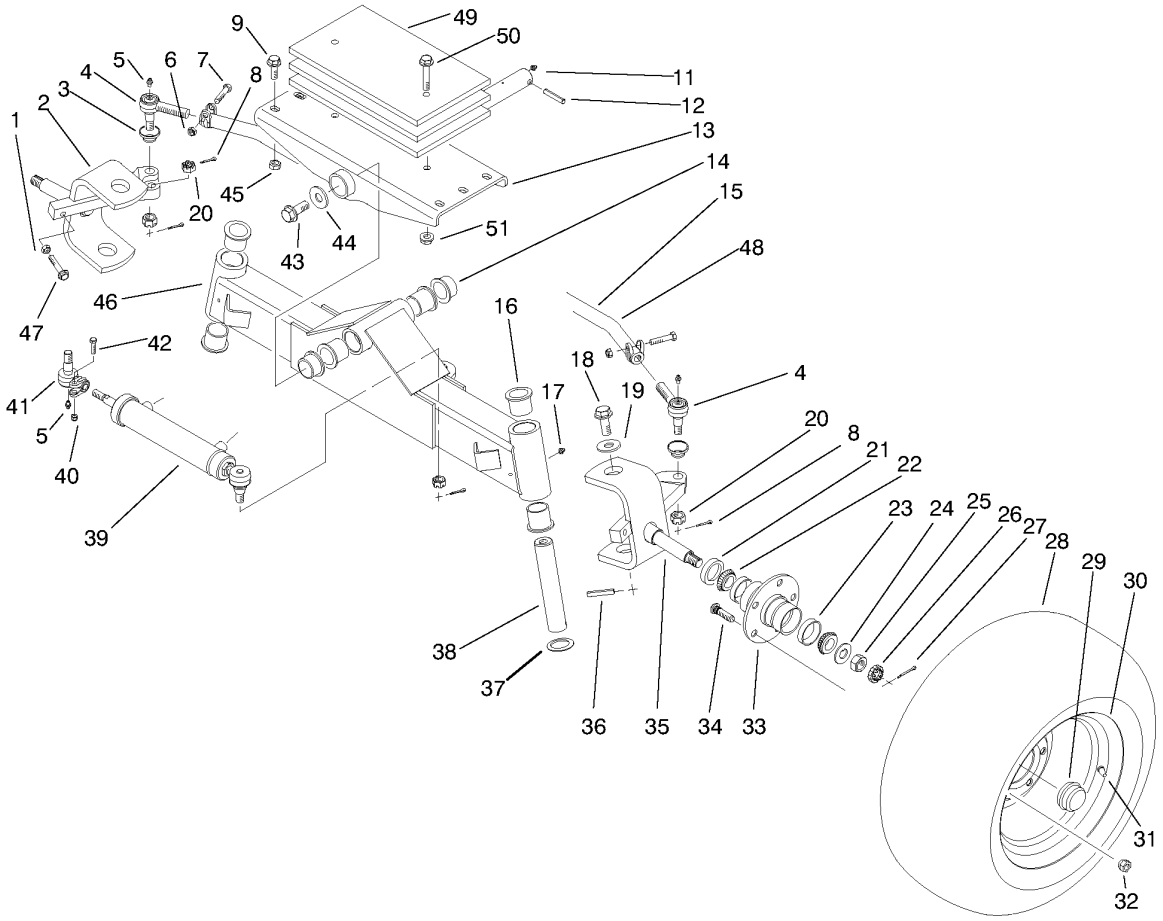

Rear Axle Assembly (model No. 30301)

Ref.	Part Number	Qty.	Description
1	33015-00	2	Nut-Hex
2	93-5158	1	Spindle-RH
3	71-4760	2	Seal
4	71-4740	2	End-Rod, Tie (RH)
5	302-55	3	Fitting-Grease
6	3296-39	2	Nut-Lock, NI
7	323-9	2	Screw-HH
8	3272-11	4	Pin-Cotter
9	33106-035	6	Screw-HHF
10	93-5142	1	Pin-Pivot, Axle
11	302-2	1	Fitting-Grease
12	32121-110	1	Pin-Roll, Slotted
13	95-4411	1	Pivot-Axle
14	93-4510	2	Bushing-Caster
15	93-5168	1	Asm-Tie Rod (Incl. Ref. #3-7, 20 & 48)
16	69-6470	6	Bushing-Caster
17	302-5	2	Fitting-Grease
18	33108-035	2	Screw-HHF
19	3256-7	2	Washer-Flat
20	32136-13	4	Nut-SHH
21	253-129	2	Seal
22	254-94	4	Bearing-Cone, Tapered
23	254-72	4	Bearing-Cup, Tapered
24	93-0309	2	Washer-Tab
25	3220-7	2	Nut-Jam
26	93-0307	2	Nut-Lock, Retainer
27	3272-13	2	Pin-Cotter
28	74-5560	2	Tire
29	241-119	2	Cap-Dust
30	217-122	2	Wheel ASM
31	232-27	2	Stem-Valve
32	242-50	10	Nut-Lug
33	21-2820	2	Asm-Hub (Incl. Ref. #34)
34	10-6830	10	Stud-Type, Drive
35	93-5496	1	Spindle-LH
36	32121-110	2	Pin-Roll, Slotted
37	62-2170	2	Washer-Thrust
38	93-5503	2	Pin-Pivot, Spindle
39	93-5502	1	Steering Cylinder
40	3296-4	1	Nut-Lock
41	92-5072	1	Rod-End, Ball Joint
42	3210-7	1	Screw-HH
43	33108-035	1	Screw-HHF
44	3256-7	1	Washer-Flat
45	33026-00	6	Nut-Lock
46	93-5121	1	Axle-Rear
47	33115-040	2	Screw-HH
48	93-5169	1	Asm-Clamp & Tube
49	93-5983	3	Plate-Weight
50	33106-060	2	Screw-HHF
51	33006-00	2	Nut-HF

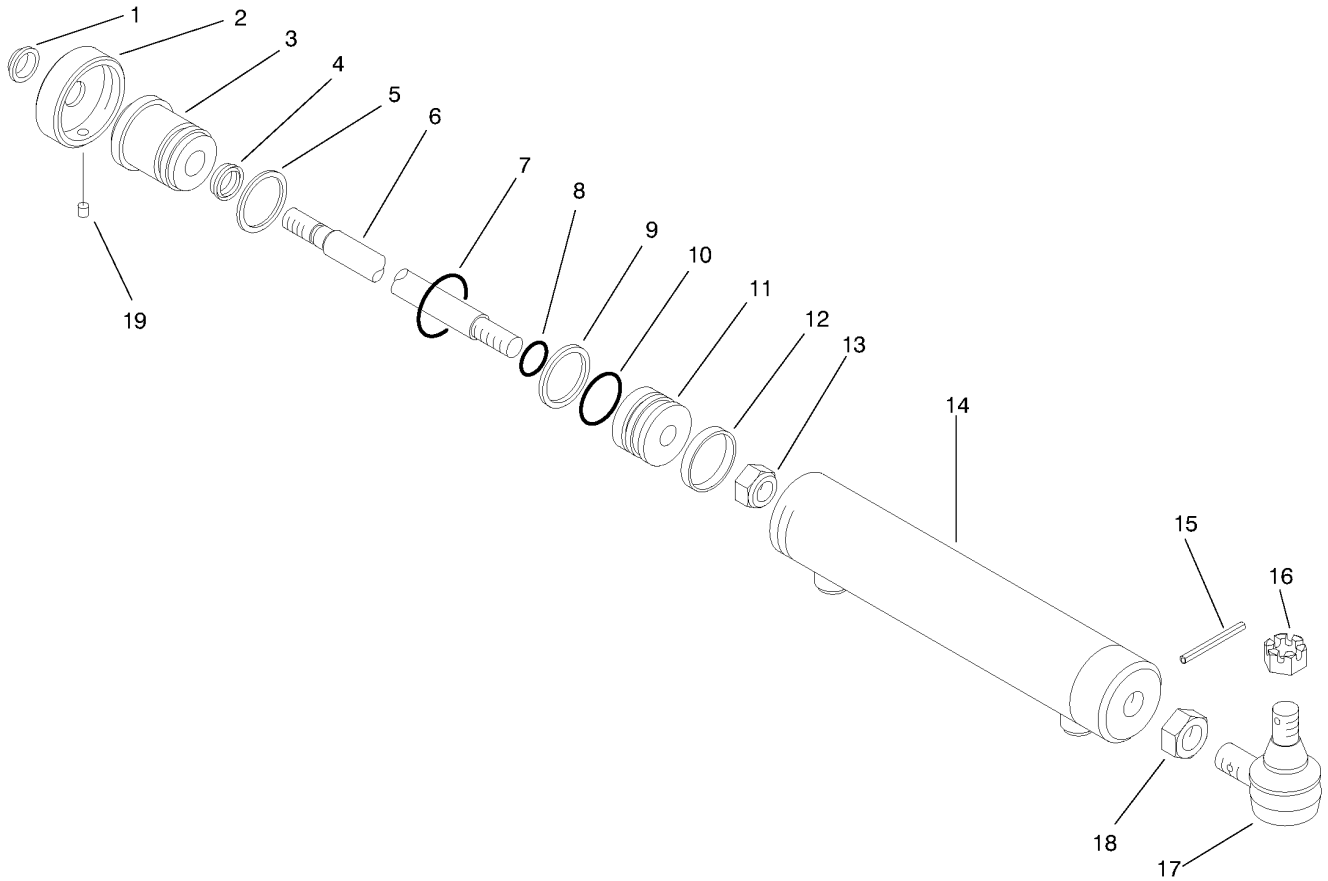

Steering Cylinder Assembly No. 93-5502

Ref.	Part Number	Qty.	Description
1		1	Wiper-Rod
2	92-5705	1	Thread-Cap
3	92-5706	1	Thread-Head, Cap
4		1	U-Cup, Loaded
6	93-5555	1	Rod
9		1	Ring-Piston, Unithane
11	92-5703	1	Piston
12		1	Ring-Wear
13	88-3590	1	Nut-Lock
14		1	Asm.-Barrel
15	32121-44	1	Pin-Roll
16	32136-13	1	Nut-SHH
17	82-5730	1	End-Rod, Tie
18	82-5740	1	Nut-Jam
19	92-5708	1	Screw-Cap, Thread
	92-5707	1	Kit-Seal (Incl. Ref. #1, 4, 5, 7-10 & 12) ●

● Not illustrated

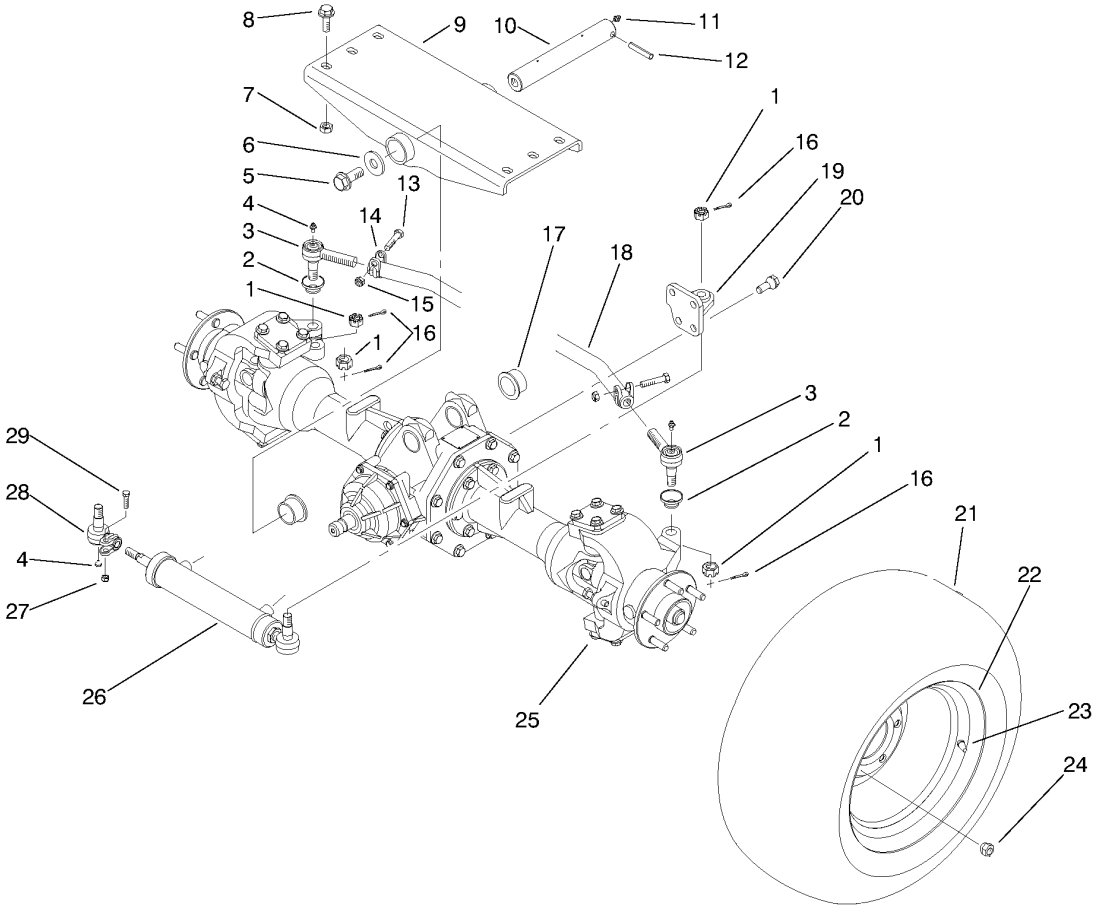

Rear Axle Assembly (model No. 30302)

Ref.	Part Number	Qty.	Description
1	32136-13	4	Nut-SHH
2	71-4760	2	Seal
3	71-4740	2	End-Rod, Tie (RH)
4	302-55	3	Fitting-Grease
5	33108-040	1	Screw-HHF
6	3256-7	1	Washer-Flat
7	33026-00	6	Nut-Lock
8	33106-035	6	Screw-HHF
9	95-4411	1	Pivot-Axle
10	93-5142	1	Pin-Pivot, Axle
11	302-2	1	Fitting-Grease
12	32121-110	1	Pin-Roll, Slotted
13	323-9	2	Screw-HH
14	93-5169	1	Asm-Clamp & Tube
15	3296-39	2	Nut-Lock, NI

Ref.	Part Number	Qty.	Description
16	3272-11	4	Pin-Cotter
17	93-4510	2	Bushing-Caster
18	93-5168	1	Asm-Tie Rod (Incl. Ref. #1-4, & 13-15)
19	93-5436	1	Anchor-Cylinder
20	93-5444	4	Screw-Tapered
21	74-5560	2	Tire
22	217-122	2	Wheel ASM
23	232-27	2	Stem-Valve
24	93-5268	10	Nut-Lug
25	93-5035	1	Axle-Rear, 4Wd
26	93-5962	1	Cylinder - Steering
27	3296-4	1	Nut-Lock
28	92-5072	1	Rod-End, Ball Joint
29	3210-7	1	Screw-HH

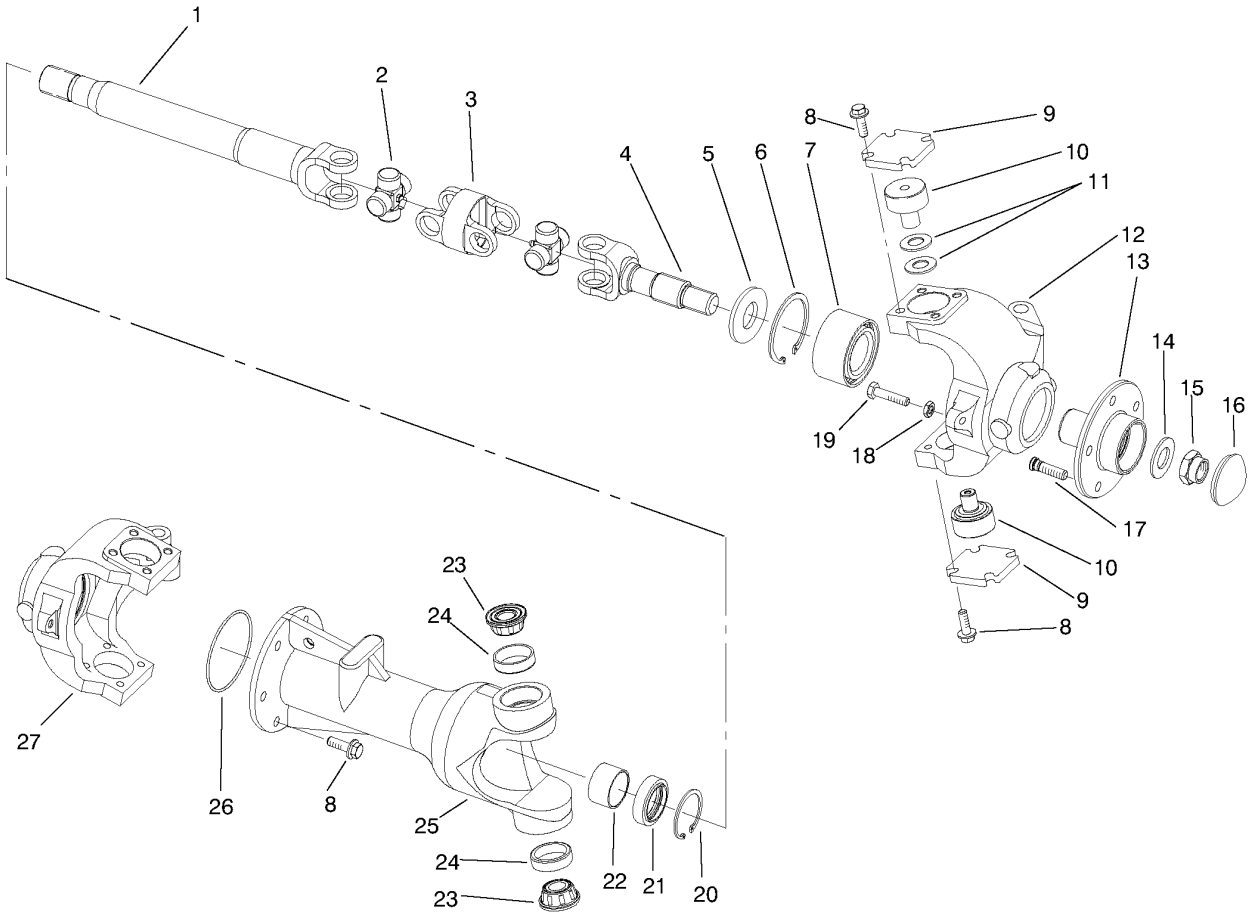

4wd Axle-Universal Joint and Kingpin Assembly

Ref.	Part Number	Qty.	Description
1	95-0650	1	Yoke-Inbord, Shaft
2	95-0651	2	Cross & Bearing Kit
3	95-0652	1	Yoke-Pivot, Double
4	95-0653	1	Yoke-Shaft, Outboard
5	94-4037	2	Washer
6	93-5964	2	Ring-Retaining
7	94-4030	2	Wheel Bearing ASM
8	33105-030	28	Screw-HHF
9	94-4119	4	Cover-Kingpin
10	94-4121	4	Trunnion-Kingpin
11	94-4126	4	Washer-Spring
12	94-4116	1	Flange-Spindle, LH
13		2	Hub-Wheel ■
14	94-4034	2	Washer
15	94-4079	2	Nut-Lock, Hex
16	95-0654	2	Cap-Dust
17	94-4143	10	Stud-Wheel
18	33015-00	2	Nut-Hex
19	33105-050	2	Screw-HHF
20	94-4133	2	Ring-Retaining

Ref.	Part Number	Qty.	Description
21	94-4128	2	Seal-Lip
22	94-4127	2	Bearing-Journal
25		2	Housing-Kingpin ■
26	94-4131	2	O-Ring
27	94-4115	1	Flange-Spindle, RH
	94-4123	1	Joint-Universal (Incl. Ref. #1-4) ●
	94-9190	1	Asm-Housing, Axle (Incl. Ref. 20-22 & 25) ●
	94-9191	1	Kit-Bearing, Kingpin (Incl. Ref. #23-24) ●
	94-9193	1	Asm-Hub, Wheel (Incl. Ref. #13 & 17) ●
	94-9194	1	Asm-Flange, Spindle RH (Incl. Ref. #6, 7, 13, 17 & 27) ●
	94-9195	1	Asm-Flange, Spindle LH (Incl. Ref. #6, 7, 12, 13 & 17) ●
	94-9198	1	Overhaul Seal Kit ●

● Not illustrated

■ Not serviced separately

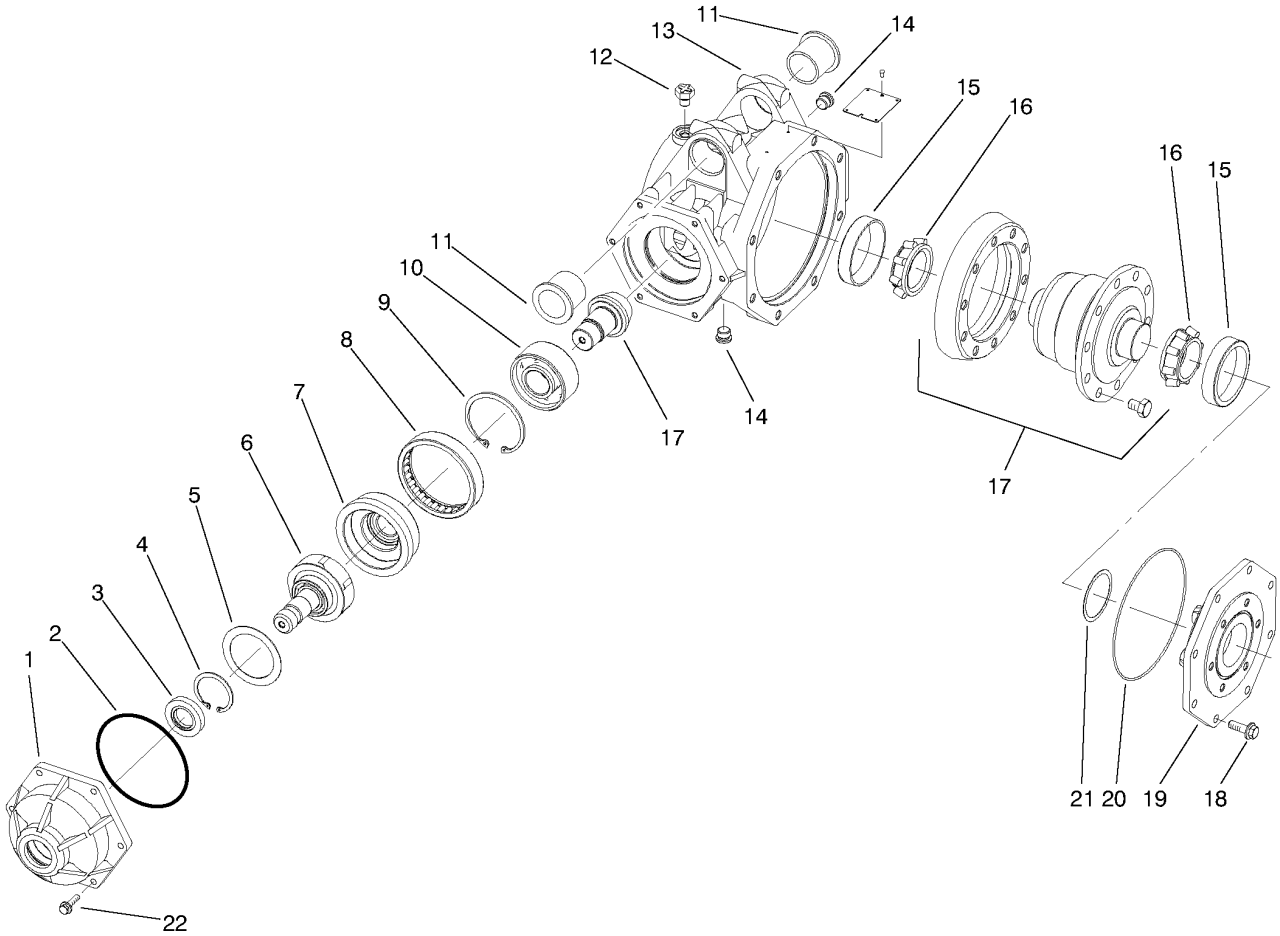

4wd Axle-Housing Assembly

Ref.	Part Number	Qty.	Description
1	94-4134	1	Housing-Clutch
2	94-4132	1	O-Ring
3	94-3925	1	Seal-Lip
4	94-4029	1	Ring-Retaining, Int.
5	94-4137	1	Washer-Thrust
6	94-4135	1	Clutch
7	94-4138	1	Race-Clutch
8	94-4136	1	Bearing-Needle
9	69-3200	1	Ring-Retaining
10	94-4130	1	Bearing-Ball
11	69-6470	2	Bushing-Caster
12	94-3998	1	Vent-Breather
13		1	Housing-Axle, Steerable
14	353-989	2	Plug-Hex, Hollow
17	94-4120	1	Z

Ref.	Part Number	Qty.	Description
18	33105-030	8	Screw-HHF
19	94-4114	1	Cover-Side
20	94-4129	1	O-Ring
21	94-9187	1	Differential Kit
22	33103-025	6	Screw-HHF
	94-9185	1	Asm-Gear, Bevel (Incl. Ref. #10, 15-17 & 21) ●
	94-9186	2	Kit-Bearing, Differential (Incl. Ref. #15-16) ●
	94-9188	1	Asm-Differential (Incl. Ref. #9-21) ●
	94-9189	1	Asm-Housing, Differential (Incl. Ref. #11-14) ●
	94-9192	1	Asm-Clutch, Overrunning (Incl. Ref. #1-8 & 22) ●

● Not illustrated

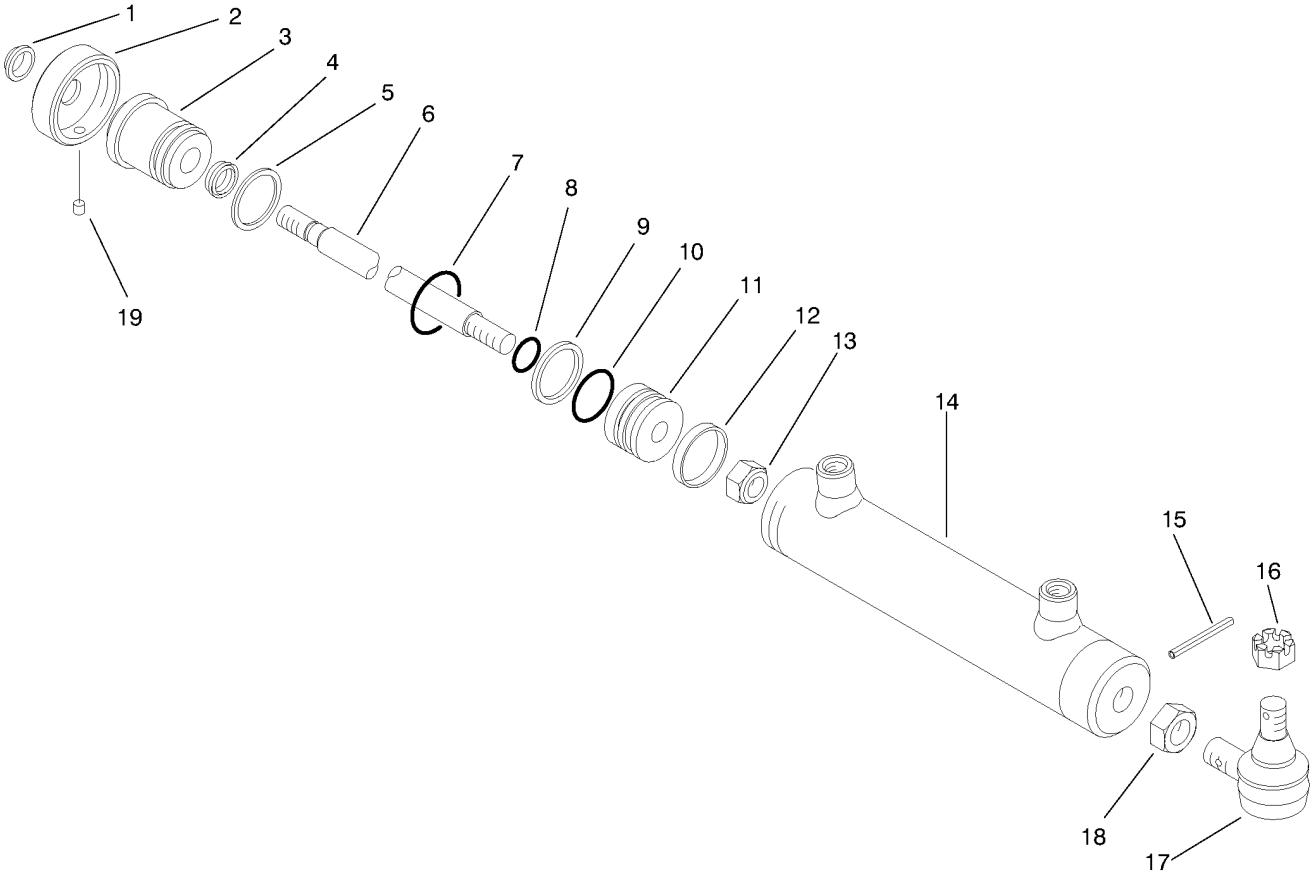

Steering Cylinder Assembly No. 93-5962

Ref.	*Part Number*	*Qty.*	*Description*
1		1	Wiper-Rod
2	92-5705	1	Thread-Cap
3	92-5706	1	Thread-Head, Cap
4		1	U-Cup, Loaded
6	93-5555	1	Rod
9		1	Ring-Piston, Unithane
11	92-5703	1	Piston
12		1	Ring-Wear
13	88-3590	1	Nut-Lock
14		1	Asm-Barrel
15	32121-44	1	Pin-Roll
16	32136-13	1	Nut-SHH
17	82-5730	1	End-Rod, Tie
18	82-5740	1	Nut-Jam
19	92-5708	1	Screw-Cap, Thread
	92-5707	1	Kit-Seal (Incl. Ref. #1,4, 5, 7-10 & 12)

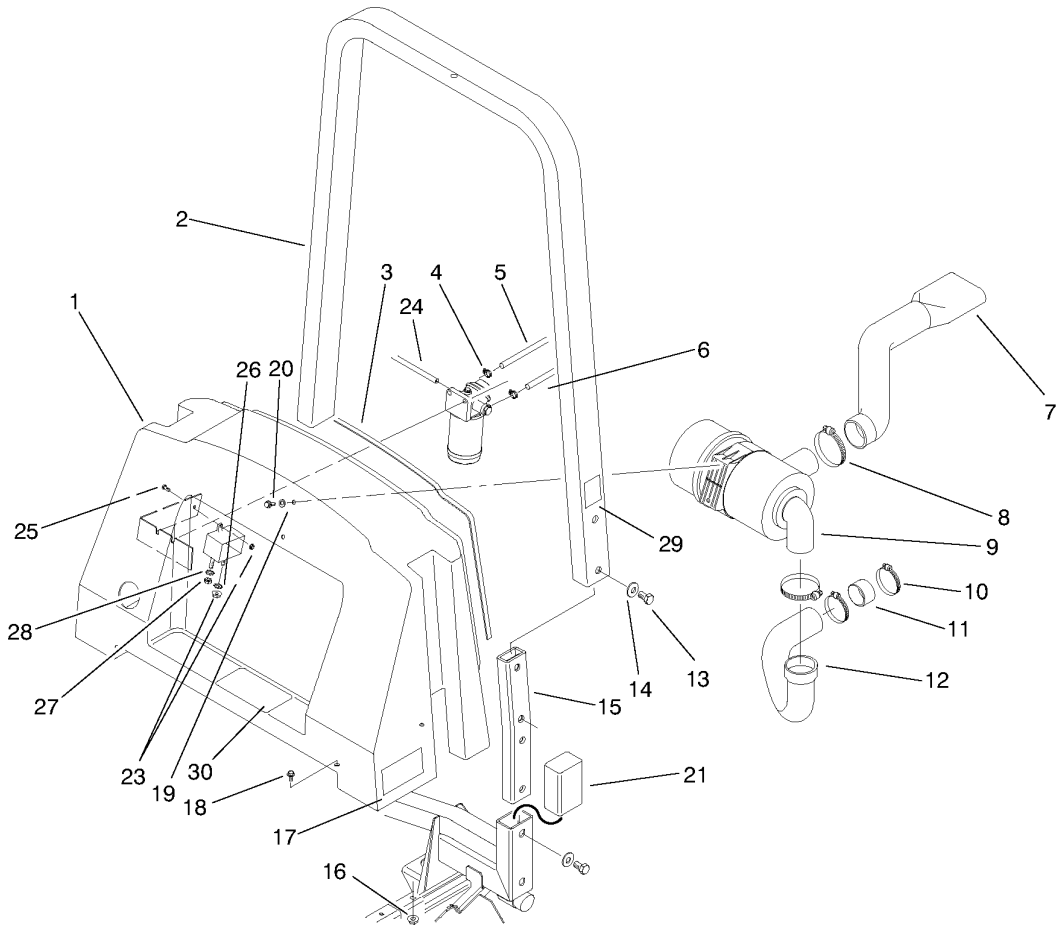

Center Shroud and Air Cleaner Assembly

Ref.	Part Number	Qty.	Description
1	93-5645	1	Center Shroud ASM
2	95-6135	1	Roll Over Protection System (Incl. Ref. #29) (Model 30302 Only)
3	93-5253	1	Strip-Foam, Hood
4	2412-108	2	Clamp-Worm
5	95-5936	1	Hose-Fuel
6	93-5484	1	Hose-Fuel
7	93-5083	1	Hose-Cleaner, Air
8	2412-110	2	Clamp-Hose
9	93-5111	1	Cleaner-Air
10	2412-130	2	Clamp-Hose
11	93-5427	1	Spacer-Intake
12	93-5084	1	Hose-Cleaner, Air
13	93-5420	8	Screw-HH
14	3256-6	8	Washer-Flat
15	93-5157	2	Bar-ROPS
16	33004-00	2	Nut-HF
17	94-8099	2	Decal
18	33104-016	4	Screw-HHF
19	3256-3	2	Washer-Flat
20	33104-020	2	Screw-HHF
21	93-5638	2	Cover-Tube
23	33003-00	2	Nut-HF
24	68-5910	1	Hose-Fuel Line, 19 Inch
25	33113-020	1	Screw-HH
26	3255-7	1	Washer-Lock/EXT
27	48-7880	1	Nut-Hex
28	3255-10	1	Washer-Lock / EXT
29	95-5646	1	Decal-ROPS
30	93-9894	1	Decal-Safety

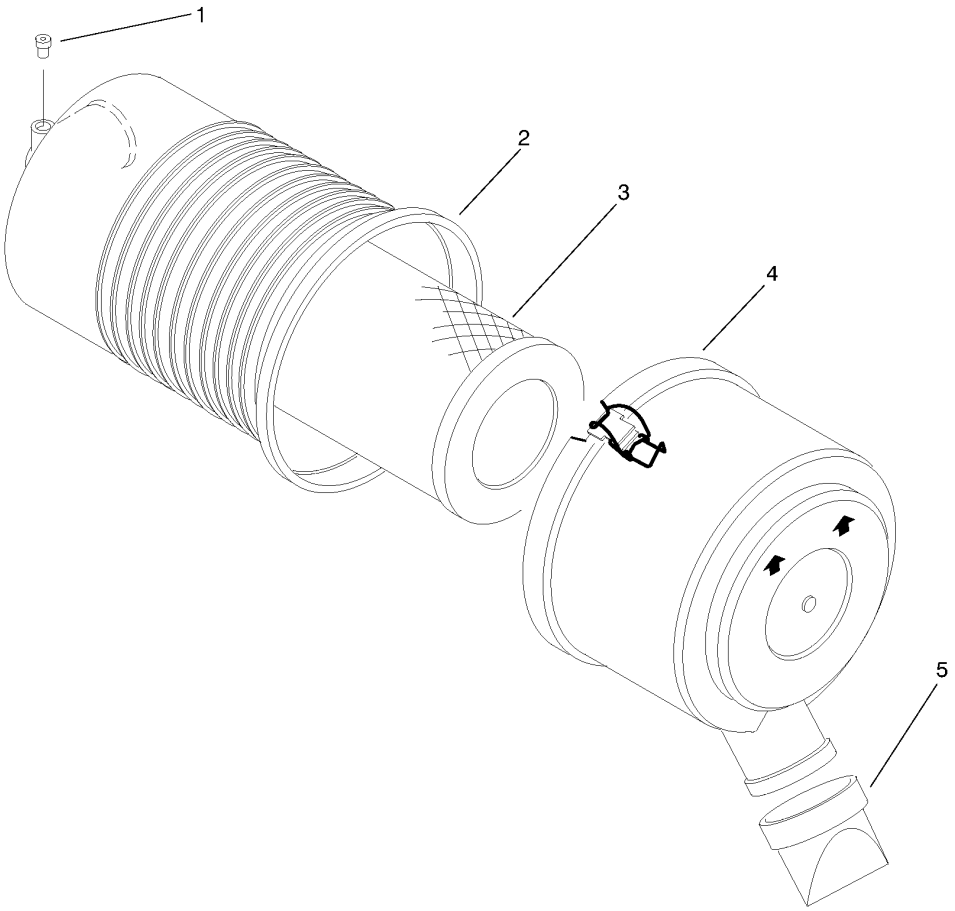

Air Cleaner Assembly No. 93-5111

Ref.	*Part Number*	*Qty.*	*Description*
1		1	Plug
3	94-1412	1	Asm-Element
4	93-5986	1	Cover ASM
5	94-1414	1	Valve-Vacuator

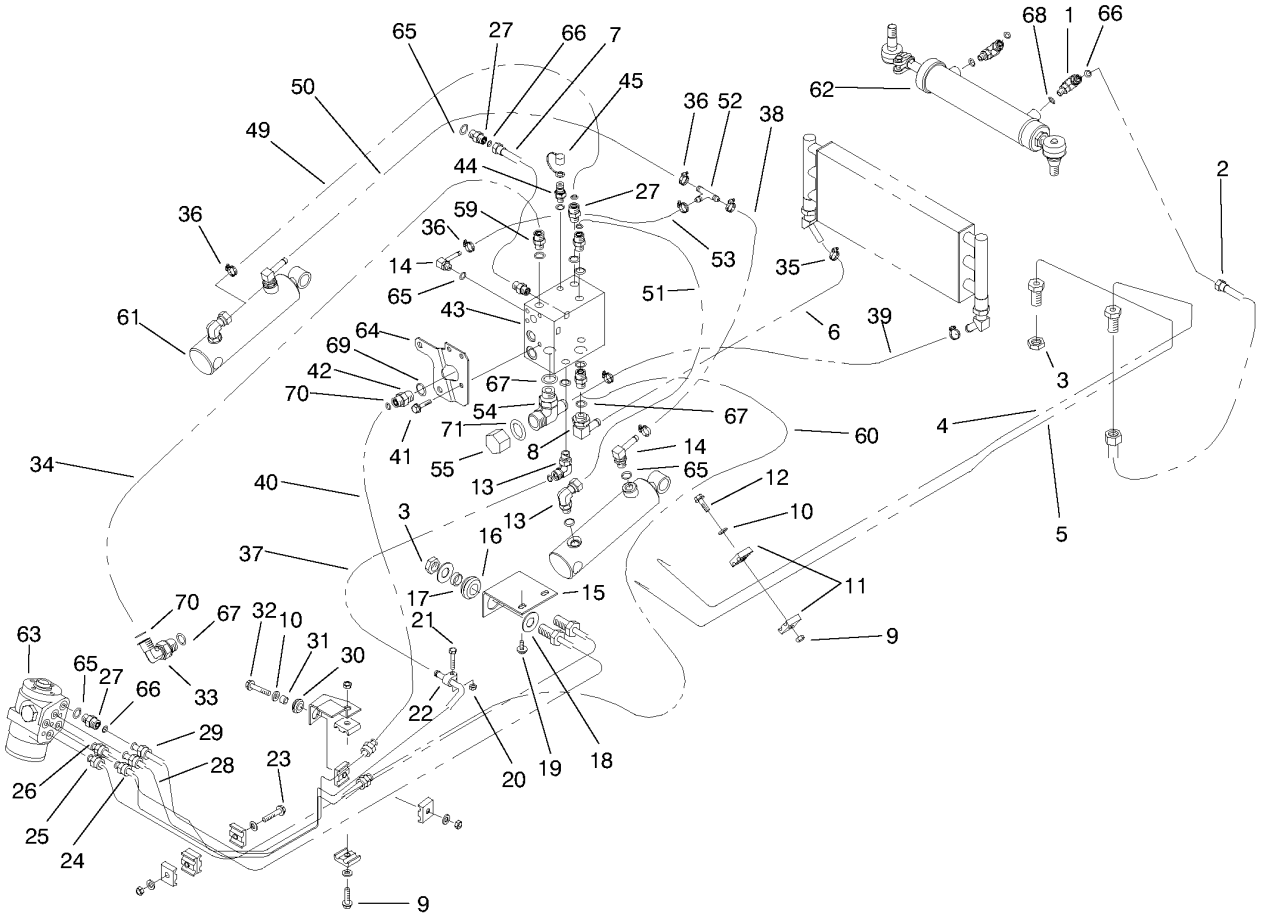

Hydraulic Component Assembly

Ref.	Part Number	Qty.	Description
1	340-97	2	Fitting-Hydraulic 90Ø (Incl. Ref. #66 & 68)
2	93-5353	2	Hose ASM
3	340-70	4	Nut-Lock
4	93-5571	1	Tube-HYD
5	93-5572	1	Tube-HYD
6	95-0954	1	Hose
7	95-0950	1	Hose ASM
8	354-128	1	Fitting-Barbed (Incl. Ref. #67)
9	33104-035	2	Screw-HHF
10	3256-23	6	Washer-Flat
11	56-7973	10	Clamp-Tube
12	33024-00	4	Nut-Lock
13	340-77	3	Fitting-Hydraulic 90Ø (Incl. Ref. # 65 & 66)
14	354-135	3	Fitting-Barbed (Incl. Ref. #65)
15	93-5587	1	Bracket-Bulkhead
16	240-4	2	Grommet-Rubber
17	69-8970	2	Spacer
18	69-8940	4	Washer
19	33104-016	2	Screw-HHF
20	33023-00	1	Nut-Lock
21	33113-035	1	Screw-HH
22	2412-114	1	Clamp-Single
23	33114-060	1	Screw-HH
24	93-5574	1	Tube-HYD
25	93-5576	1	Tube-HYD
26	93-5575	1	Tube-HYD
27	340-2	13	Adapter (Incl. Ref. # 65 & 66)
28	93-5577	1	Tube-HYD
29	93-5573	1	Tube-HYD
30	93-5108	1	Grommet-Rubber
31	93-5109	1	Spacer
32	33104-040	1	Screw-HHF
33	340-105	1	Elbow (Incl. Ref. #67 & 70)
34	95-0975	1	Tube-HYD
35	2412-141	4	Clamp-Drive, Worm
36	2412-108	7	Clamp-Worm
37	95-0952	1	Hose
38	93-5358	1	Hose ASM
39	95-0955	1	Hose
40	93-5346	1	Hose ASM
41	33104-025	3	Screw-HHF
42	340-2	1	Adapter (Incl. Ref. #69 & 70)
43	94-9291	1	Manifold-HYD
44	354-77	1	Fitting-Quick Connect (Incl. Ref. #68)
45	353-947	1	Cap-Dust, Rubber
49	93-5386	1	Hose ASM
50	93-5357	1	Hose ASM
51	93-5385	1	Hose ASM
52	354-107	1	Fitting-HYD, Tee

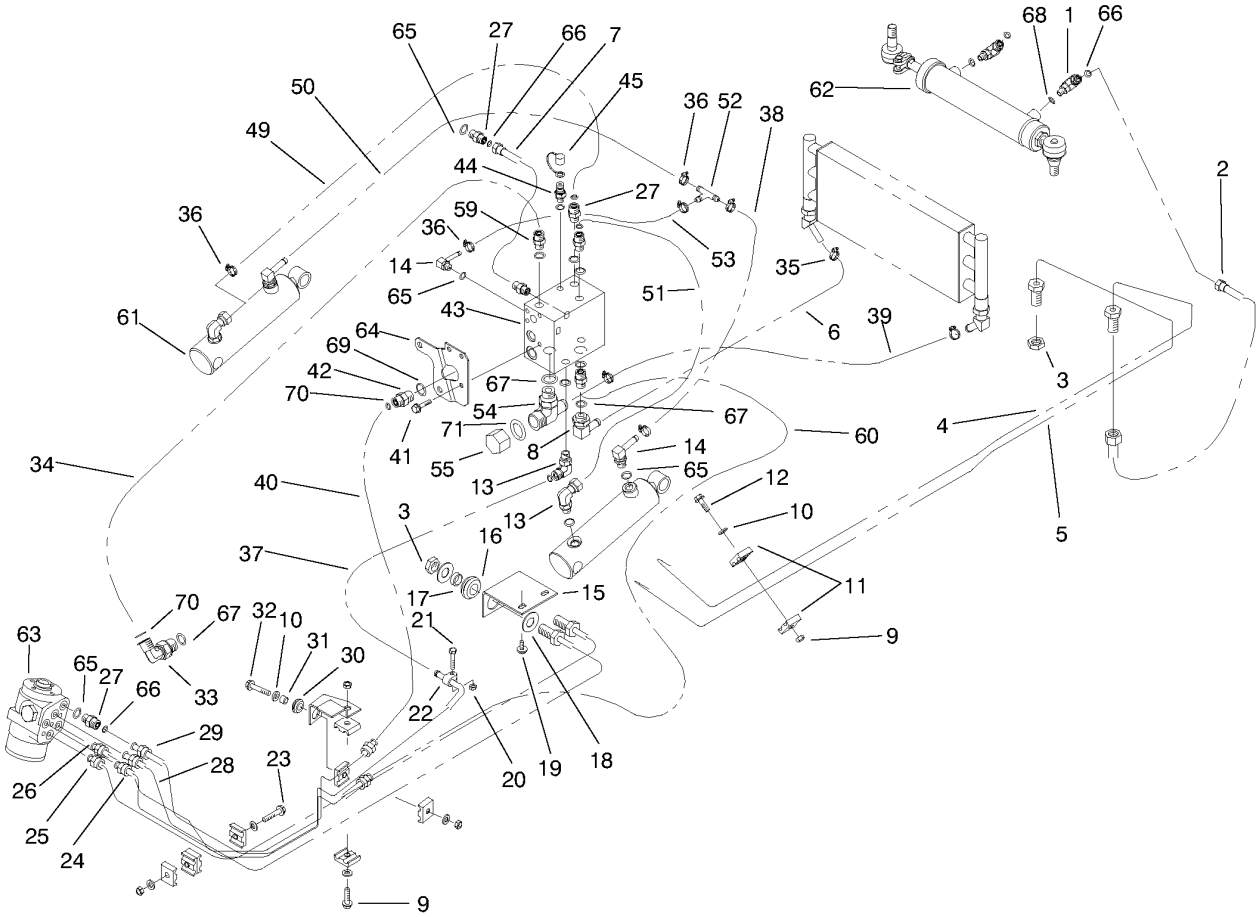

Hydraulic Component Assembly (continued)

Ref.	Part Number	Qty.	Description
53	95-0953	1	Hose
54	94-9295	1	Fitting-Tee (Incl. Ref. #67 & 71)
55	95-0979	1	Cap-Ors
59	340-5	1	Fitting-Hydraulic, Straight (Incl. Ref. #65 & 70)
60	95-0951	1	Hose ASM
61	95-5604	2	Cylinder-Hydraulic
62	93-5962	1	Cylinder - Steering

Ref.	Part Number	Qty.	Description
63	93-5165	1	Valve-Control, Steering
64	94-9282	1	Bracket-Balance, Counter
65	237-42	20	O-Ring
66	237-22	20	O-Ring
67	237-80	3	O-Ring
68	237-78	3	O-Ring
69	237-79	1	O-Ring
70	237-30	2	O-Ring
71	237-58	1	O-Ring

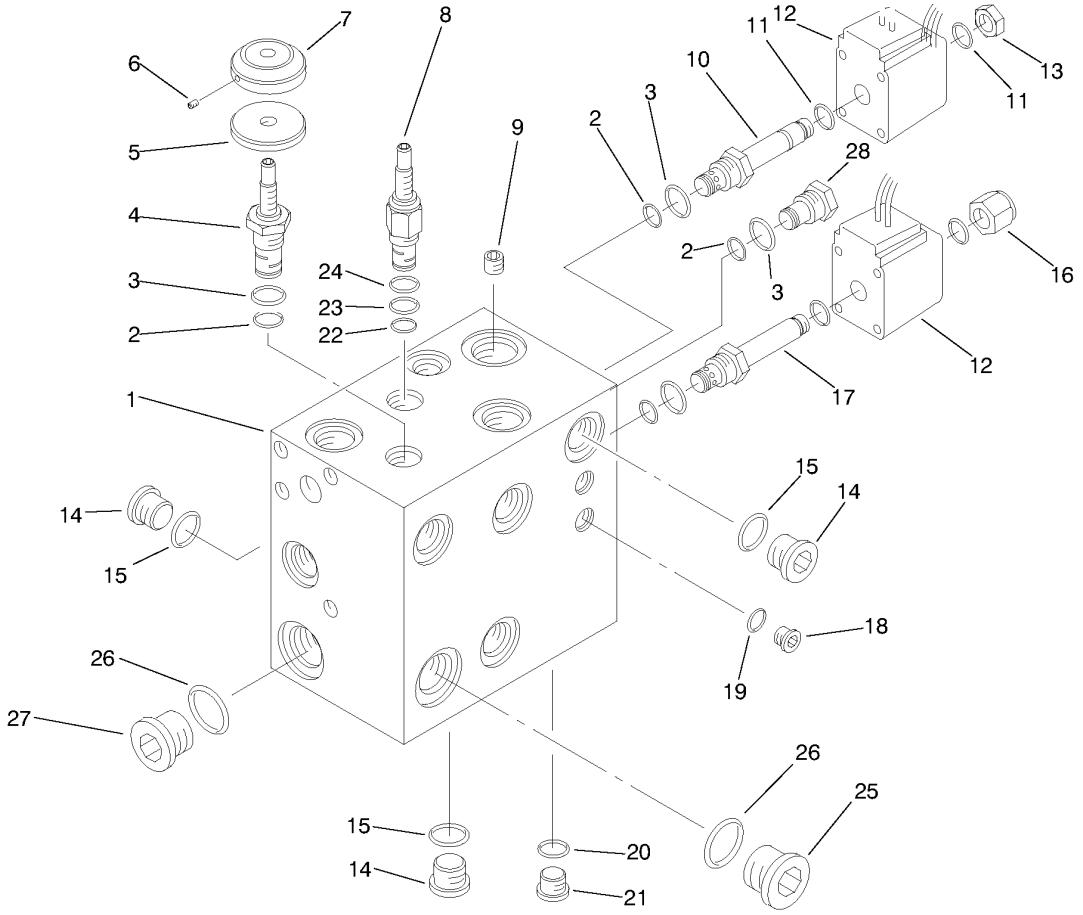

Manifold Assembly No. 94-9291

Ref.	Part Number	Qty.	Description
4	93-5944	1	Valve-Needle (Incl. Ref, #2, 3, & 5-7)
5		1	Wheel ■
6		1	Screw-Set ■
7	93-5948	1	Knob-Knurled (Incl. Ref. #5 & 6)
8	93-5943	1	Valve-Logic (Incl. Ref. #22-24)
9	95-5941	1	Plug-Orifice
10	92-6315	1	Cartridge-Nc, Poppet (Incl. Ref. #2, 3, 11 &13)
11	94-5438	4	Seal-Washer
12	88-9190	2	Solenoid Coil Kit
13	3219-10	1	Nut-Hex
14	353-989	6	Plug (Incl. Ref. #15)
15	237-42	6	O-Ring
16		1	Nut ■

Ref.	Part Number	Qty.	Description
17	93-7494	1	Cartridge-No, Poppet (Incl. Ref. #2, 3, 11 &16)
18	353-991	5	Plug (Incl. Ref. #19)
19	237-156	5	O-Ring
20	237-78	1	O-Ring
21	353-990	1	Plug (Incl. Ref. #20)
25	354-70	1	Plug (Incl. Ref. #26)
26	237-79	2	O-Ring
27	353-988	1	Plug (Incl. Ref. #26)
28	95-7480	1	Plug-Cavity (Incl. Ref. #2 & 3)
	69-4240	1	Kit-Seal (Incl. Ref. #22-24) ●
	75-2080	1	Kit-Seal (Incl. Ref. #2 & 3) ●
	93-5948	1	Kit-Knob (Incl. Ref. #5-7) ●
	95-7003	1	Plug-Orifice (Optional) ●

● Not illustrated

■ Not Serviced Separately.

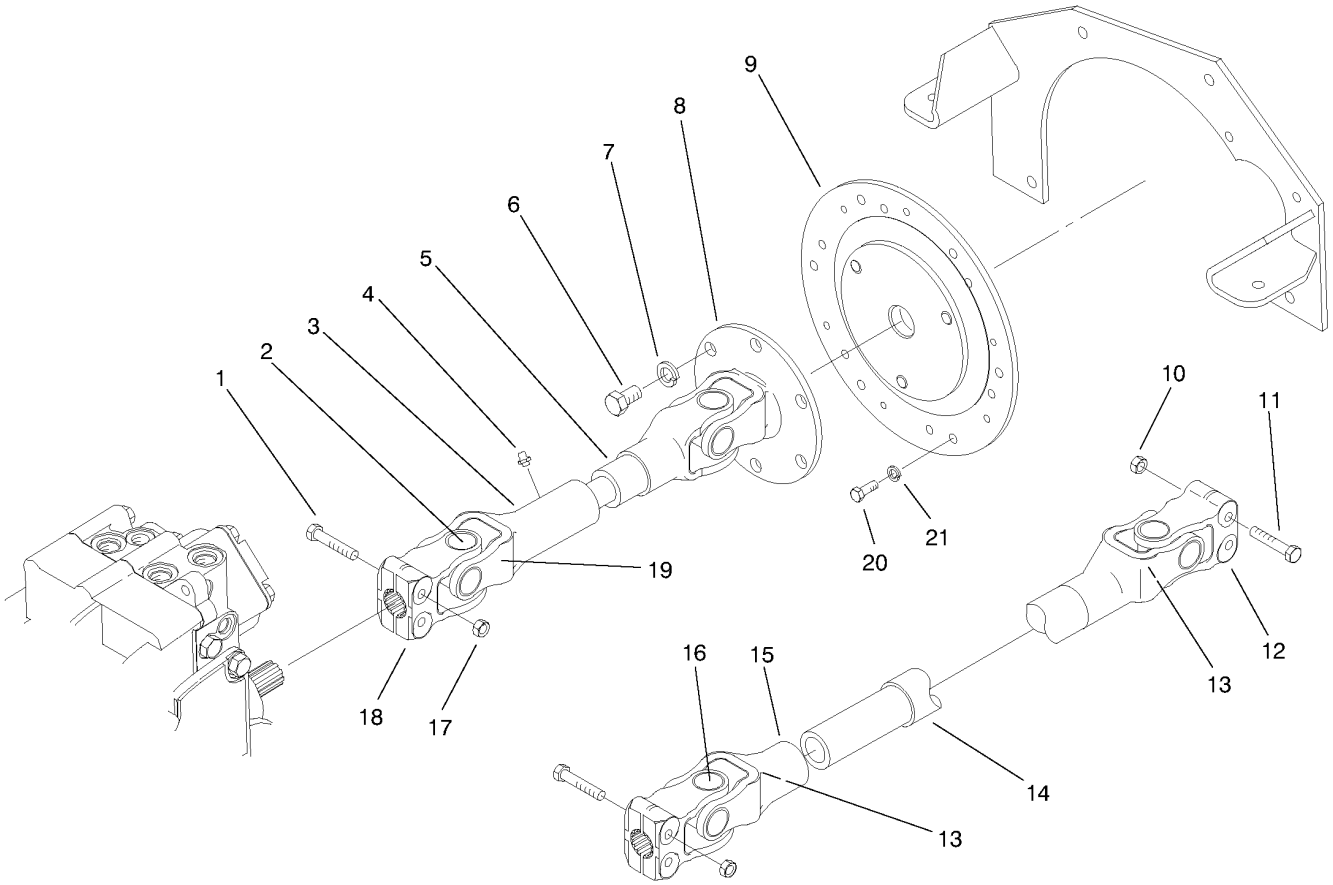

Drive Shaft Assembly

Ref.	*Part Number*	*Qty.*	*Description*
1	33114-045	2	Screw-HH
2	93-5561	2	Cross & Bearing Kit
3	93-5563	1	Yoke-Slip
4	302-5	2	Fitting-Grease
5	93-5562	1	Yoke & Shaft
6	33106-020	3	Screw-HHF
7	3253-7	3	Washer-Lock
8	93-5559	1	Yoke-Flange
9	93-5043	1	Plate-Adapter, Engine
10	33024-00	4	Nut-Lock
11	33114-050	4	Screw-HH
12	93-5560	2	Yoke-Clamp
13	302-8	2	Fitting-Grease
14	93-5565	1	Yoke & Sleeve
15	93-5564	1	Yoke & Shaft
16	93-5561	2	Cross & Bearing Kit
17	33024-00	2	Nut-Lock
18	93-5560	1	Yoke-Clamp
19	302-8	2	Fitting-Grease
20	93-5398	6	Screw-HH
21	3253-4	6	Washer-Lock
	93-5041	1	Asm-Drive Shaft, Engine (Incl. Ref. #2-5, 8, 18, & 19)
	93-5042	1	Asm-Drive Shaft (Model 30302 Only) (Incl. Ref. #4, & 12-16)

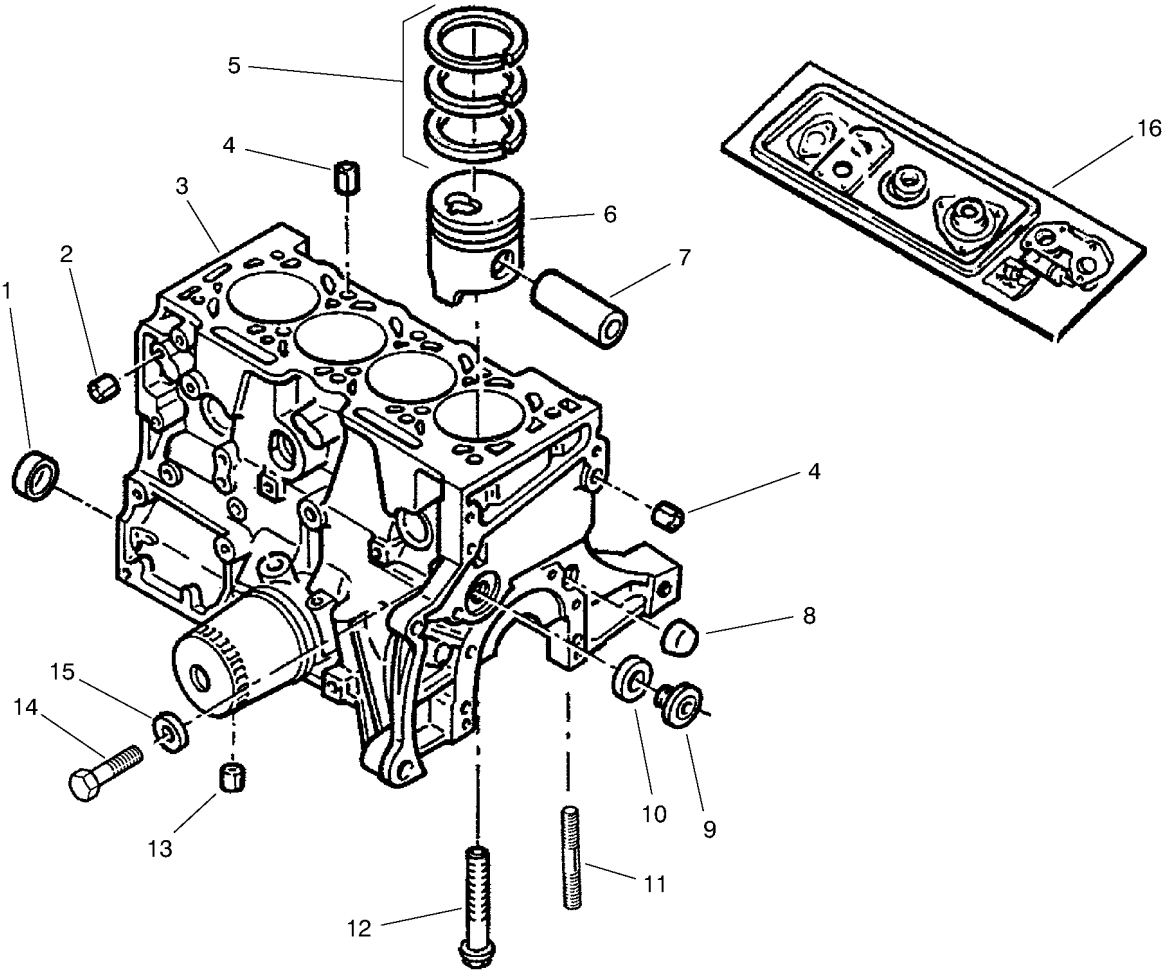

Cylinder Block Assembly

Ref.	Part Number	Qty.	Description
1	74-7840	7	Plug
2	93-5659	2	Pin (Dowel Ring)
3	93-5965	1	Asm-Cylinder Block (Incl. Ref. #5-7)
4	76-5690	4	Washer-Thrust
5	93-5714	1	Set Of 3 Pistons Rings
7		4	Pin-Wrist ■
8	93-5656	1	Plug
9	94-3121	2	Plug
10	93-5653	2	Plug Seal
11	93-5660	3	Stud
12	93-5657	10	Screw
13	93-5658	1	Pin (Dowel)
14	100-1389	1	Plug-Drain
15	95-3026	1	Plug-Seal
16	93-5652	1	Gasket Set
	93-5650	1	Stripped Engine ●

● Not illustrated
▲ Not Serviced Separately.

■ Not serviced separately

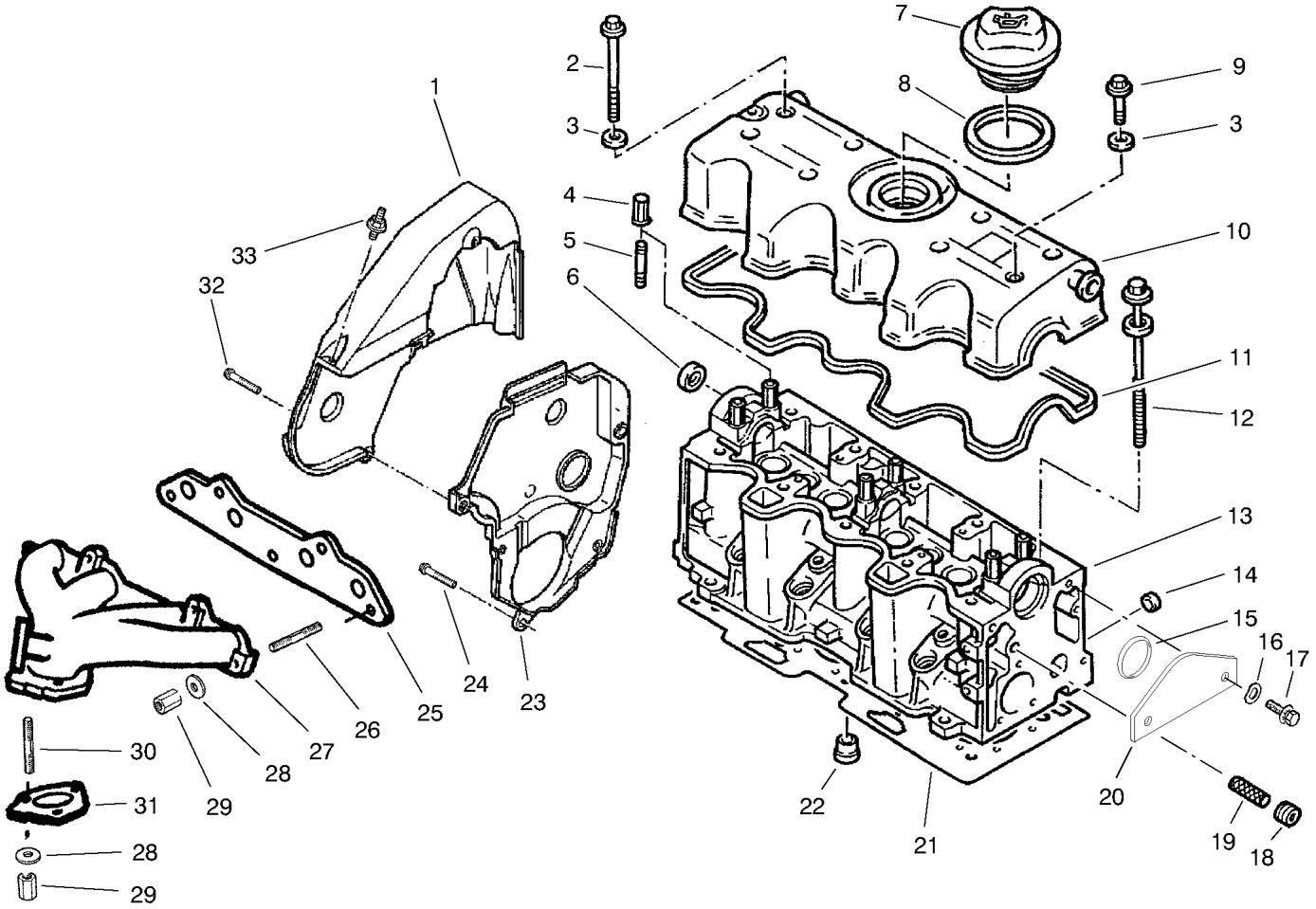

Cylinder Head Assembly

Ref.	Part Number	Qty.	Description
1	95-7475	1	Upper Cover
2	93-5672	4	Screw
3	93-5667	8	Gasket
4	93-5674	6	Nut
5	94-3162	6	Stud
6	74-7840	2	Plug
7	93-5668	1	Asm-Oil Cap Filler (Incl, Ref, #8)
8	93-5666	1	Gasket
9	93-5673	4	Screw
10	93-5662	1	Cover (Incl. Ref. #11)
11	93-5665	1	Gasket
12	94-4146	10	Screw - HD Cylinder
13	93-5661	1	Cylinder Head
14	93-5669	4	Plug
15	93-5926	1	O-Ring
16	93-5928	2	Spring Washer
17	93-5927	2	Screw

Ref.	Part Number	Qty.	Description
18	94-3118	2	Plug
19	93-5670	1	Filter Element
20	93-5925	1	Cover Plate
21	93-5947	1	Gasket - Cylinder Head
22	94-4145	4	Chamber - Swirl 3.815
23	98-8070	1	Lower Cover
24	95-7477	5	Screw
25	93-5894	1	Gasket
26	93-5895	5	Stud
27	93-5893	1	Exhaust Manifold
28	93-5897	8	Plate Washer F/W
29	93-5896	8	Hexagonal Nut F/W
30	93-5898	3	Stud
31	93-5892	1	Pipe Gasket F/W
32	95-7479	1	Screw
33	95-7478	1	Screw
	93-5664	1	Gasket Set - Running ●

● Not illustrated

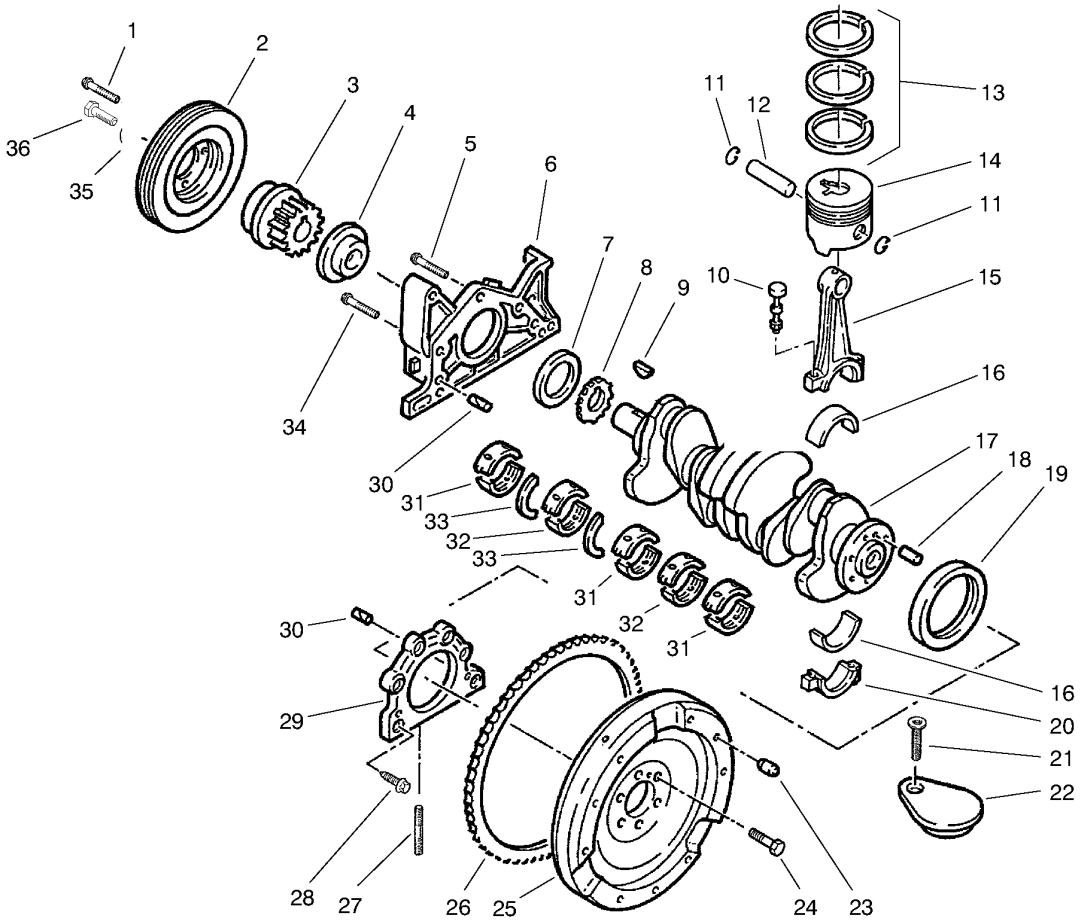

Piston and Crankshaft Assembly

Ref.	Part Number	Qty.	Description
1	94-3112	4	Screw
2	98-8071	1	Crankshaft Pulley
3	93-5684	1	Gear
4	93-5699	1	Spacer
5	93-5710	2	Screw
6	93-5687	1	Gasket Plate
7	93-5701	1	Gasket
8	93-5698	1	Oil Pump Gear
9	93-5703	1	Key
10	93-5715	8	Connecting Rod Bolt
11	93-5716	8	Circlip
12		4	Pin-Wrist ■
13	93-5714	4	Set Of 3 Pistons Rings
15	93-5712	1	Set Of 4 Connecting Rods (Incl. Ref. #10 & 20)
16	93-5713	1	Set Of 8 Half Bearings
16	95-2705	1	Half Bearing-8 X 44.7
17	93-5681	1	Crankshaft
18	74-8250	1	Pin
19	93-5702	1	Gasket
20		4	Cap-Rod, Connecting ■
21	93-5709	1	Screw
22	93-5700	1	Plug
23	93-5705	3	Pin
24	93-5708	6	Screw

● Not illustrated
▲ Not Serviced Separately.

Ref.	Part Number	Qty.	Description
25	93-5682	1	Engine Flywheel (Incl. Ref. #26)
26	93-5683	1	Starter Ring Gear
27	93-5707	2	Stud
28	93-5704	6	Screw
29	93-5686	1	Gasket Plate
30	93-5706	4	Pin
31	93-5688	6	Half Bearing Cn-Ep 1.844
	93-5689	6	Half Bearing Cn-Ep 1.838 ●
	93-5690	6	Half Bearing Cn-Ep 1.869 ●
	95-2706	6	Half Bearing (1.994 Thk) ●
	95-2707	6	Half Bearing (2.008 Thk) ●
	95-2708	6	Half Bearing (2.019 Thk) ●
32	93-5691	4	Half Bearing Cn-Ep 1.844
	93-5692	4	Half Bearing Cn-Ep 1.858 ●
	93-5693	4	Half Bearing Cn-Ep 1.869 ●
	95-2709	4	Half Bearing (1.994 Thk) ●
	95-2710	4	Half Bearing (2.008 Thk) ●
	95-2711	4	Half Bearing (2.019 Thk) ●
33	93-5694	2	Half Flange - Ep 2.40
	93-5695	2	Half Flange - Ep 2.50 ●
	93-5696	2	Half Flange - Ep 2.55 ●
	93-5697	2	Half Flange - Ep 2.60 ●
34	93-5711	3	Screw
35	74-8080	1	Washer
36	94-3145	1	Screw-Pulley

■ Not serviced separately

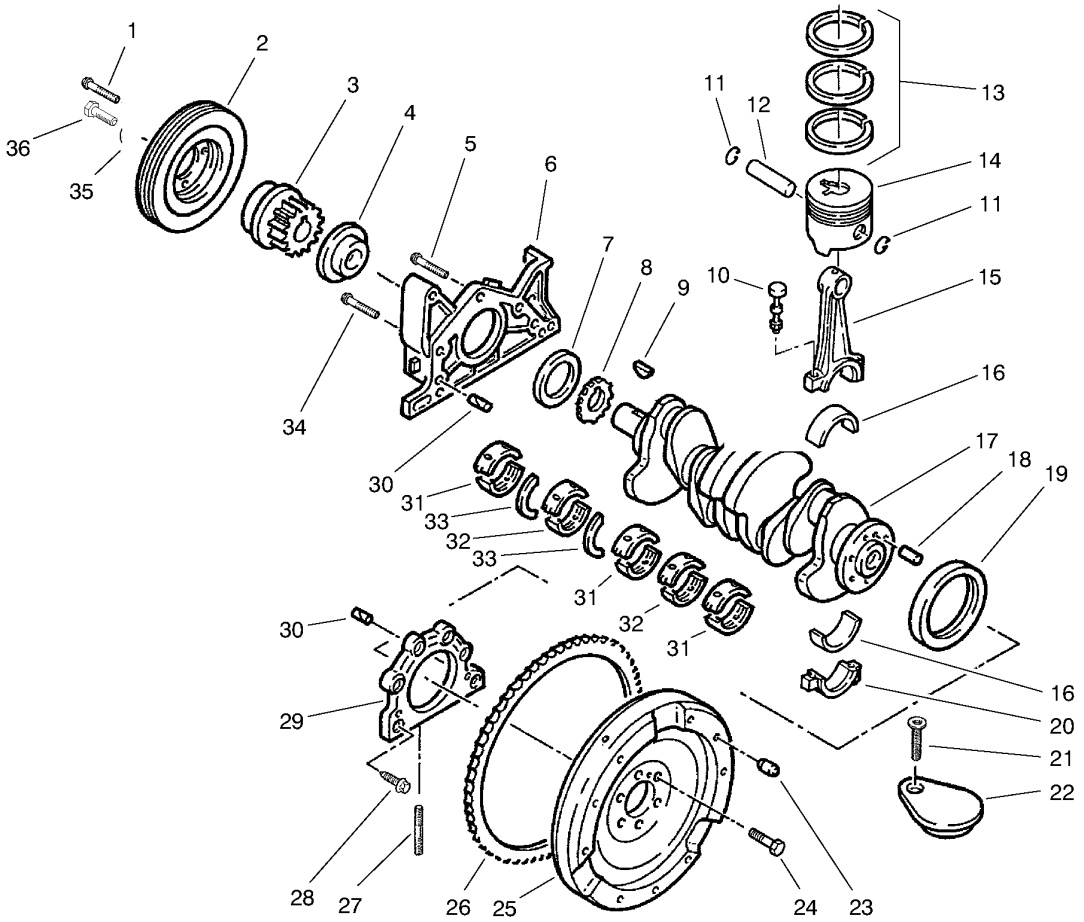

Piston and Crankshaft Assembly (continued)

Ref.	Part Number	Qty.	Description
	95-2702	1	Asm-Piston. Repair A (Incl. Ref. #11-14) ●

Ref.	Part Number	Qty.	Description
	95-2703	1	Asm-Piston. Repair B (Incl. Ref. #11-14) ●
	95-2704	1	Asm-Piston. Repair C (Incl. Ref. #11-14) ●

● Not illustrated
▲ Not Serviced Separately.

■ Not serviced separately

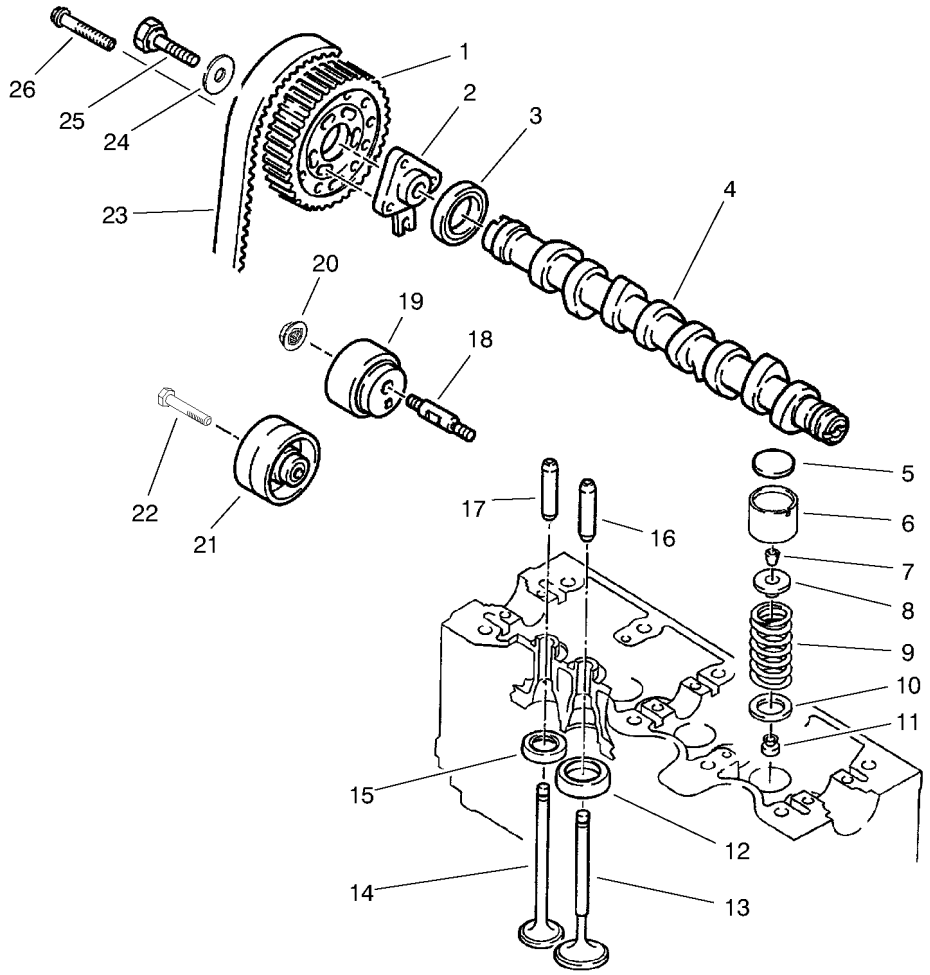

Camshaft and Valve Assembly

Ref.	Part Number	Qty.	Description
1	93-5719	1	Camshaft Gear 42 Prongs
2	93-5723	1	Pulley Hub
3	93-5718	1	Camshaft Seal
4	93-5717	1	Camshaft
5	93-5742	8	Shim-Tappet Adj (3.20)
	93-5743	8	Shim-Tappet Adj (3.25) ●
	93-5744	8	Shim-Tappet Adj (3.30) ●
	93-5745	8	Shim-Tappet Adj (3.35) ●
	93-5746	8	Shim-Tappet Adj (3.40) ●
	93-5747	8	Shim-Tappet Adj (3.45) ●
	93-5748	8	Shim-Tappet Adj (3.50) ●
	93-5749	8	Shim-Tappet Adj (3.55) ●
	93-5750	8	Shim-Tappet Adj (3.60) ●
	93-5751	8	Shim-Tappet Adj (3.65) ●
	93-5752	8	Shim-Tappet Adj (3.70) ●
	93-5753	8	Shim-Tappet Adj (3.72) ●
	93-5754	8	Shim-Tappet Adj (3.75) ●
	93-5755	8	Shim-Tappet Adj (3.77) ●
	93-5756	8	Shim-Tappet Adj (3.80) ●
	93-5757	8	Shim-Tappet Adj (3.82) ●
	93-5758	8	Shim-Tappet Adj (3.85) ●
	93-5759	8	Shim-Tappet Adj (3.87) ●
	93-5760	8	Shim-Tappet Adj (3.90) ●
	93-5761	8	Shim-Tappet Adj (3.92) ●
	93-5762	8	Shim-Tappet Adj (3.95) ●

Ref.	Part Number	Qty.	Description
	93-5763	8	Shim-Tappet Adj (3.97) ●
5	93-5764	8	Shim-Tappet Adj (4.00) ●
	93-5765	8	Shim-Tappet Adj (4.02) ●
	93-5766	8	Shim-Tappet Adj (4.05) ●
	93-5767	8	Shim-Tappet Adj (4.07) ●
	93-5768	8	Shim-Tappet Adj (4.10) ●
	93-5769	8	Shim-Tappet Adj (4.12) ●
	93-5770	8	Shim-Tappet Adj (4.15) ●
	93-5771	8	Shim-Tappet Adj (4.17) ●
	93-5772	8	Shim-Tappet Adj (4.20) ●
	93-5773	8	Shim-Tappet Adj (4.22) ●
	93-5774	8	Shim-Tappet Adj (4.25) ●
	93-5775	8	Shim-Tappet Adj (4.27) ●
	93-5776	8	Shim-Tappet Adj (4.30) ●
	93-5777	8	Shim-Tappet Adj (4.32) ●
	93-5778	8	Shim-Tappet Adj (4.35) ●
	93-5779	8	Shim-Tappet Adj (4.37) ●
	93-5780	8	Shim-Tappet Adj (4.40) ●
	93-5781	8	Shim-Tappet Adj (4.42) ●
	93-5782	8	Shim-Tappet Adj (4.45) ●
	93-5783	8	Shim-Tappet Adj (4.47) ●
	93-5784	8	Shim-Tappet Adj (4.50) ●
	93-5785	8	Shim-Tappet Adj (4.52) ●
	93-5786	8	Shim-Tappet Adj (4.55) ●
	93-5787	8	Shim-Tappet Adj (4.57) ●

● Not illustrated

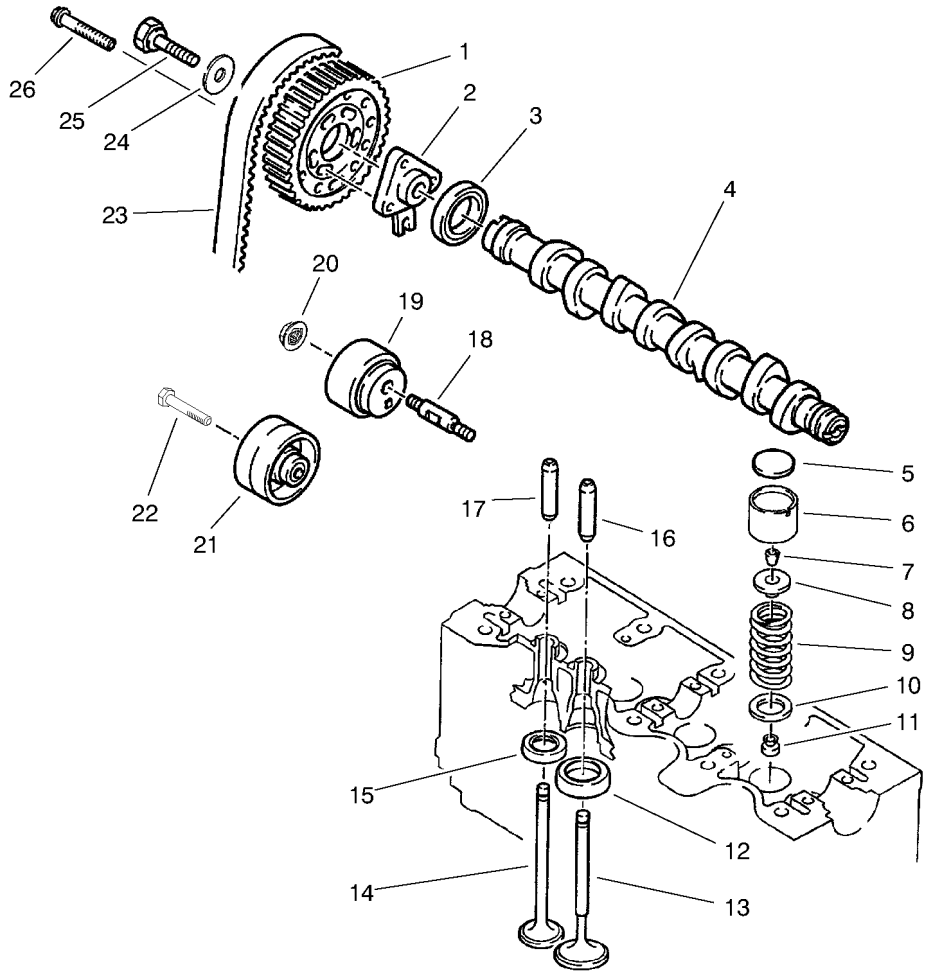

Camshaft and Valve Assembly (continued)

Ref.	Part Number	Qty.	Description
	93-5788	8	Shim-Tappet Adj (4.60)●
	93-5789	8	Shim-Tappet Adj (4.62)●
5	93-5790	8	Shim-Tappet Adj (4.65)●
	93-5791	8	Shim-Tappet Adj (4.67)●
	93-5792	8	Shim-Tappet Adj (4.70)●
	93-5793	8	Shim-Tappet(4.72 Mm)●
	93-5794	8	Shim-Tappet Adj (4.75)●
	93-5795	8	Shim-Tappet Adj (4.77)●
	93-5796	8	Shim-Tappet Adj (4.80)●
	93-5797	8	Shim-Tappet Adj (4.82)●
	93-5798	8	Shim-Tappet Adj (4.85)●
	93-5799	8	Shim-Tappet Adj (4.87)●
	93-5800	8	Shim-Tappet Adj (4.90)●
6	93-5736	8	Tappet
7	93-5734	16	Valve Half Bush
8	93-5733	8	Valve Spring Seat
9	93-5732	8	Valve Spring

Ref.	Part Number	Qty.	Description
10	93-5741	8	Flat Washer
11	93-5735	8	Valve Seal
12	93-5739	4	Inlet Seat Valve
13	93-5730	4	Intake Valve
14	93-5731	4	Exhaust Valve
15	93-5740	4	Outlet Seat Valve
16	93-5737	4	Inlet Valve Guide
17	93-5738	4	Outlet Valve Guide
18	93-5724	1	Tensioner Spindle
19	93-5721	1	Tensioner
20	93-5729	1	Nut
21	93-5722	1	Roller
22	93-5726	1	Screw
23	93-5720	1	Cogged Belt 136 Prongs
24	93-5728	1	Plate Washer
25	93-5725	1	Pulley Screw
26	93-5851	3	Screw

● Not illustrated

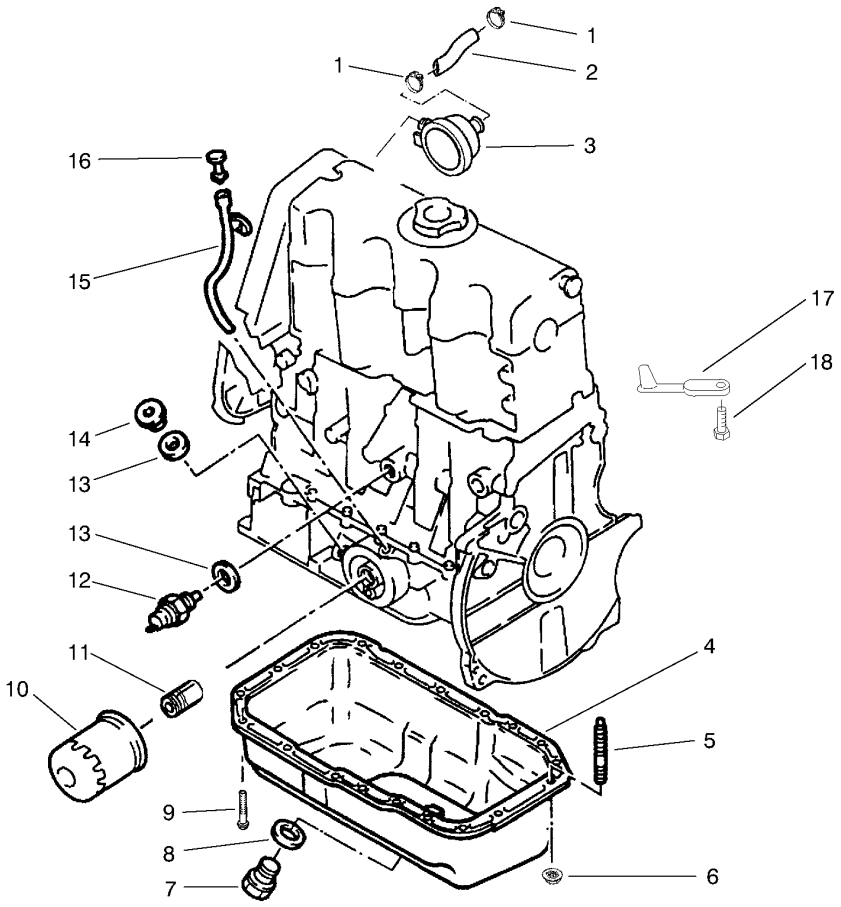

Oil System Assembly

Ref.	Part Number	Qty.	Description
1	2412-36	2	Clamp-Hose
2	93-5817	1	Union F/W
3	93-5816	1	Regulator Valve F/W
4	93-5810	1	Oil Sump
5	93-5660	3	Stud
6	93-5815	3	Nut
7	74-7310	1	Plug
8	74-7320	1	Gasket-Oil Drain Plug
9	93-5704	16	Screw
10	74-7970	1	Oil Filter
11	93-5809	1	Adaptor
12	94-3180	1	Pressure Switch Gray
13	93-5814	2	Gasket
14	93-5813	1	Drain Plug
15	93-5811	1	Dipstick Guide
16	93-5812	1	Oil Dipstick
17	95-2712	4	Oil Jet
18	93-5680	4	Screw

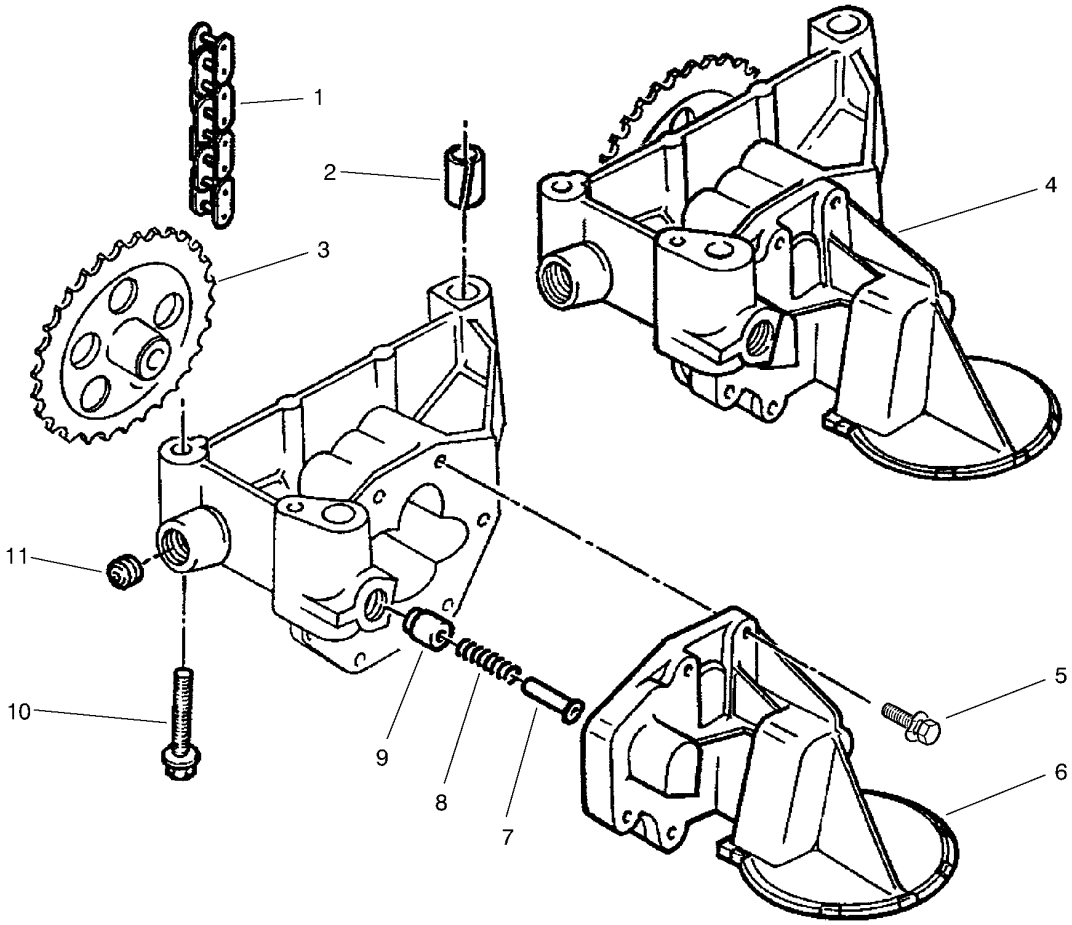

Oil Pump Assembly

Ref.	*Part Number*	*Qty.*	*Description*
1	93-5804	1	Oil Pump Chain
2	93-5658	1	Pin (Dowel)
3		1	Gear-Drive ●
4	93-5801	1	Oil Pump (Incl. Ref. #3)
5	93-5807	6	Screw
6	93-5802	1	Strainer
7	93-5806	1	Shaft
8	93-5805	1	Spring
9	94-3176	1	Valve-Relief
10	93-5803	3	Screw
11	94-3177	1	Plug

● Not service separately.

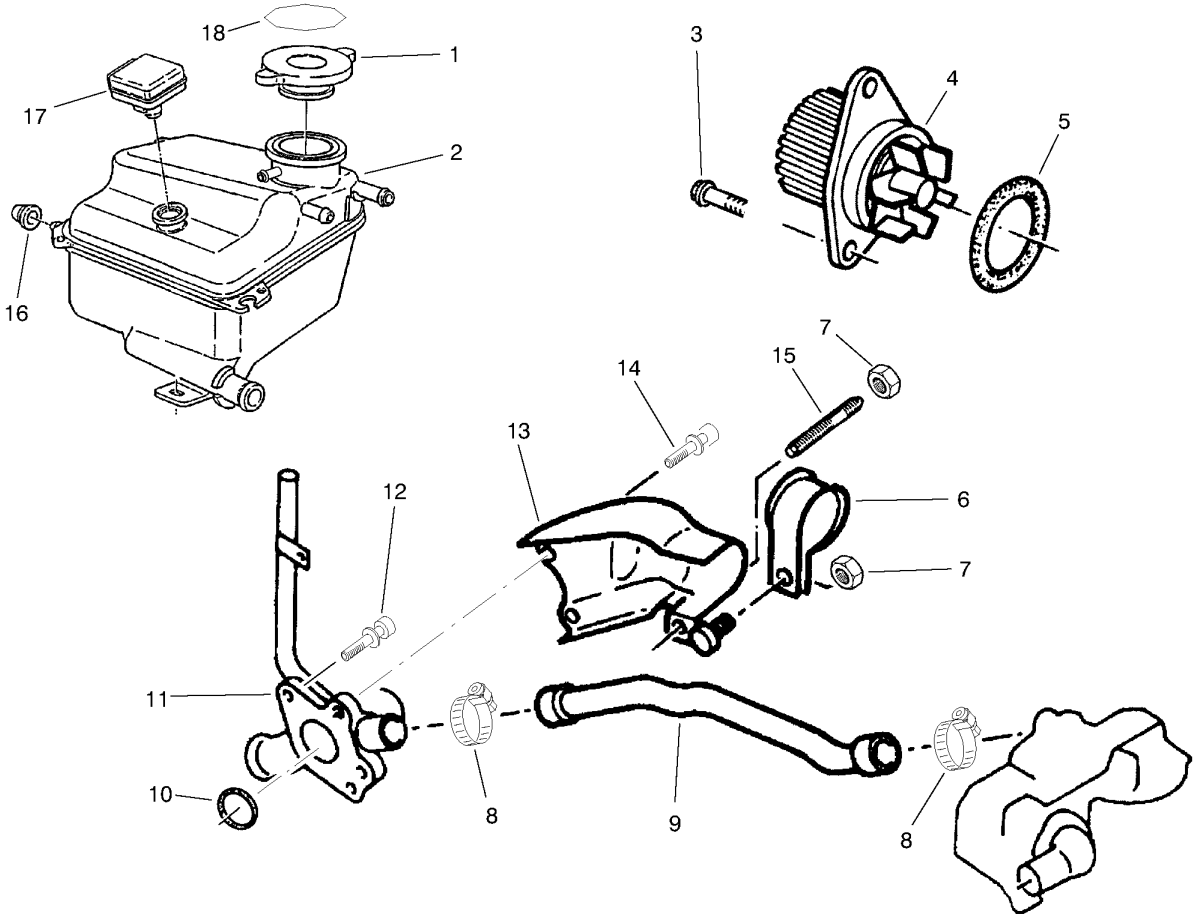

Coolant System Assembly

Ref.	*Part Number*	*Qty.*	*Description*
1	94-2800	1	Cap-Pressure
1	66-3240	1	Cap-Radiator
2	98-1805	1	Box-Degassing
3	94-3163	2	Screw-HH
4	93-5820	1	Water Pump
5	93-5822	1	O-Ring
6	93-5826	1	Clip
7	94-3267	2	Nut-Lock
8	2412-129	2	Clamp-Hose
9	93-5824	1	By-Pass Union
10	93-5821	1	O-Ring
11	93-5819	1	Water Inlet
12	93-5823	2	Screw
13	93-5825	1	Heat Shield
14	93-5827	2	Screw
15	93-5660	1	Stud
16	94-2801	2	Grommet-Rubber
17	94-9984	1	Sensor-Level, Water
18	93-7840	1	Decal-Cap, Radiator

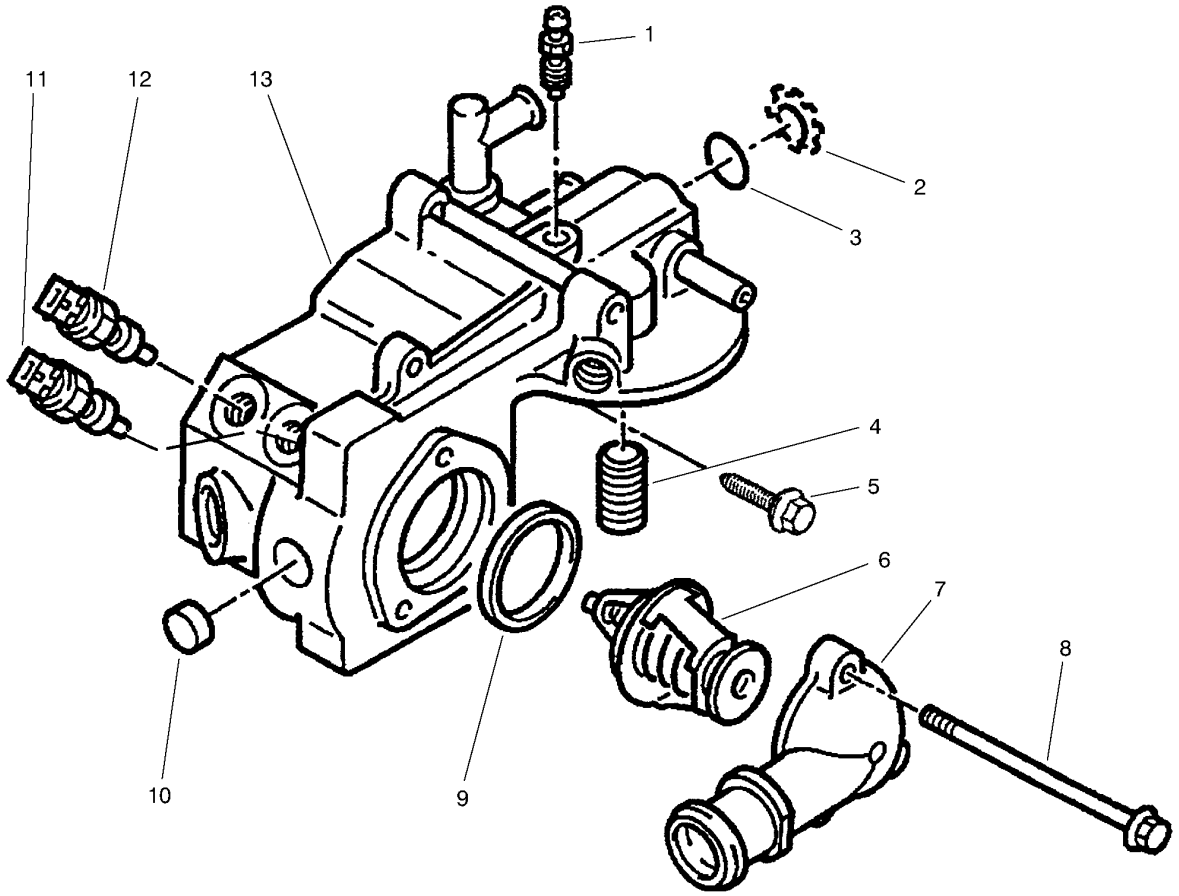

Coolant Outlet Box Assembly

Ref.	Part Number	Qty.	Description
1	93-5835	1	Bleed Screw
2	93-5840	1	Washer
3	93-5838	2	O-Ring
4	93-5836	1	Insert
5	93-5807	1	Screw
6	93-5831	1	Thermostat
7	94-9197	1	Cover - Water Outlet Box
8	93-5839	4	Screw
9	93-5837	1	Water Box Basket
10	93-5833	1	Plug
	93-5834	2	Plug ●
11	94-3211	1	Temp Sending Unit Blue
12	93-5832	1	Sender Green
13	93-5829	1	Water Outlet Box

● Not illustrated

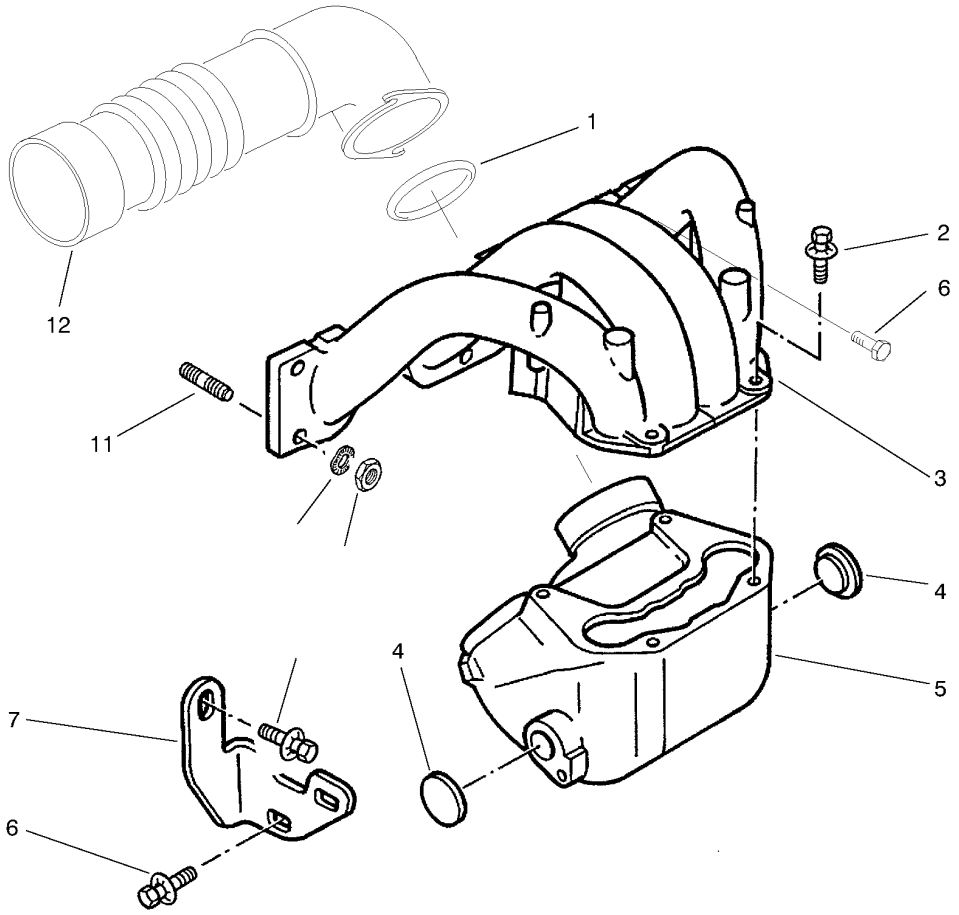

Intake Manifold Assembly

Ref.	*Part Number*	*Qty.*	*Description*
1	93-5841	1	O-Ring F/W
2	93-5847	4	Screw
3	93-5843	1	Intake Manifold
4	93-5656	2	Plug
5	93-5844	1	Air Divider
6	94-3161	3	Screw-HH
7	93-5845	1	Bracket
8	94-3131	1	Screw-HH
9	94-3165	6	Nut-Hex
10	94-3164	6	Washer-Spring
11	93-5846	6	Stud
12	93-5842	1	Air Union F/W

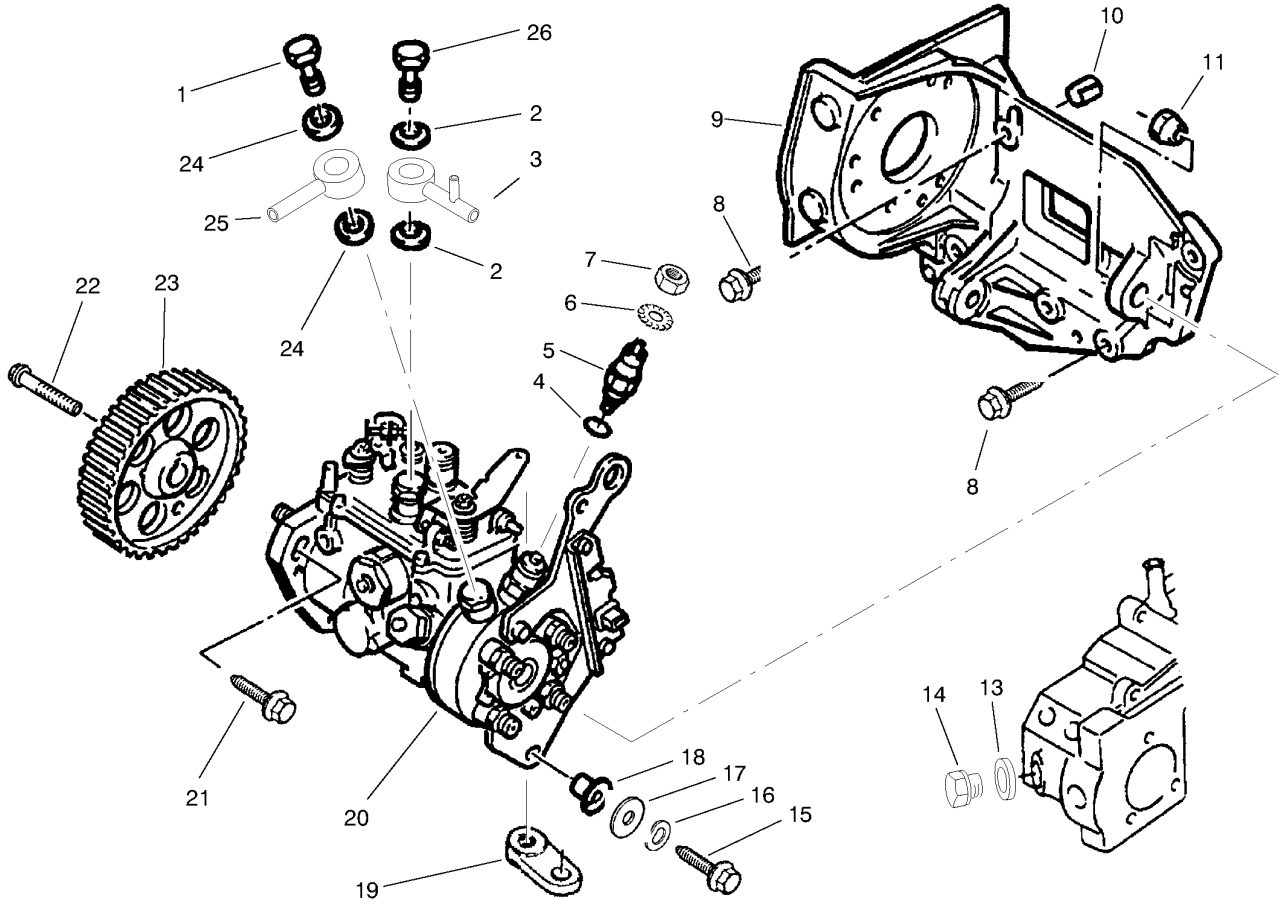

Injection Pump Assembly

Ref.	Part Number	Qty.	Description
1	94-4111	1	Union Screw-Inlet
2	74-8870	2	Gasket
3	95-1690	1	Outlet Union
4	94-3274	1	O-Ring
5	93-5856	1	Solenoid Valve
6	74-8710	1	Washer
7	48-7880	1	Nut-Hex
8	93-5852	5	Screw
	93-5853	1	Screw ●
9	93-5849	1	Injection Pump Bracket
10	93-5659	2	Pin (Dowel Ring)
11	94-3165	1	Nut-Hex
13	94-3122	1	Gasket

Ref.	Part Number	Qty.	Description
14	94-3121	1	Plug
15	94-3221	1	Screw-HH
16	94-3164	1	Washer-Spring
17	93-5855	1	Plate Washer
18	93-5909	1	Ring F/W
19	74-8650	1	Pacer
20	93-5848	1	Injection Pump
21	93-5854	3	Screw
22	93-5851	3	Screw
23	93-5719	1	Camshaft Gear 42 Prongs
24	74-8680	2	Gasket
25	93-5857	1	Inlet Union
26	94-3250	1	Screw

● Not illustrated

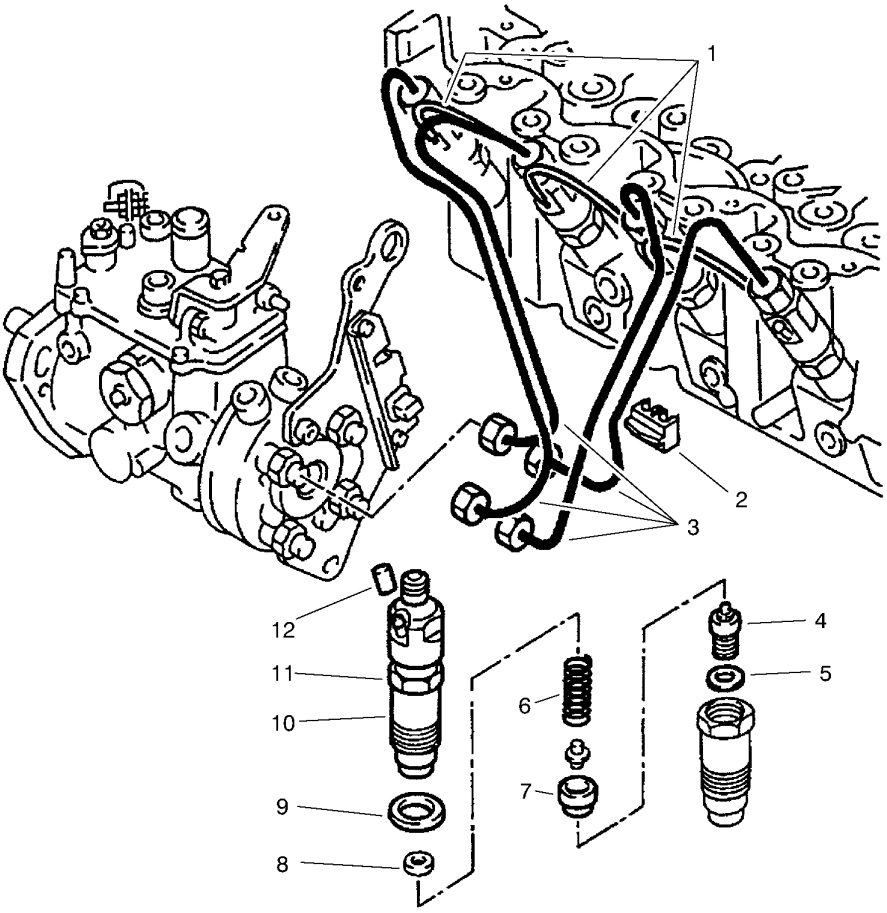

Fuel Injector and Plumbing Assembly

Ref.	Part Number	Qty.	Description
1	93-5862	3	Union
	93-5863	1	Union ●
2	94-3231	4	Bracket
3	93-5861	1	Pipe Harness
4	93-5860	4	Injector
5	93-5867	4	Injector Gasket
6	93-5864	4	Spring
7	93-5865	4	Spacer
8	93-5869	1	Shim (.68)
	93-5870	1	Shim (.72) ●
	93-5871	1	Shim (.76) ●
	93-5872	1	Shim (.80) ●
	93-5873	1	Shim (.84) ●
	93-5874	1	Shim (.88) ●
	93-5875	1	Shim (.92) ●
	93-5876	1	Shim (.96) ●
	93-5877	1	Shim (1.00) ●
	93-5878	3	Shim (1.035) ●

Ref.	Part Number	Qty.	Description
8	93-5879	1	Shim (1.065) ●
	93-5880	1	Shim (1.095) ●
	93-5881	1	Shim (1.125) ●
	93-5882	1	Shim (1.155) ●
	93-5883	1	Shim (1.185) ●
	93-5884	1	Shim (1.215) ●
	93-5885	1	Shim (1.245) ●
	93-5886	1	Shim (1.28) ●
	93-5887	1	Shim (1.32) ●
	93-5888	1	Shim (1.40) ●
	93-5889	1	Shim (1.48) ●
	93-5890	1	Shim (1.56) ●
	93-5891	1	Shim - 1.64 ●
9	93-5866	4	Injector Gasket
10	93-5868	4	Injector+inj Holder
11	94-4147	4	Holder - Injector
12	74-8770	1	Plug

● Not illustrated

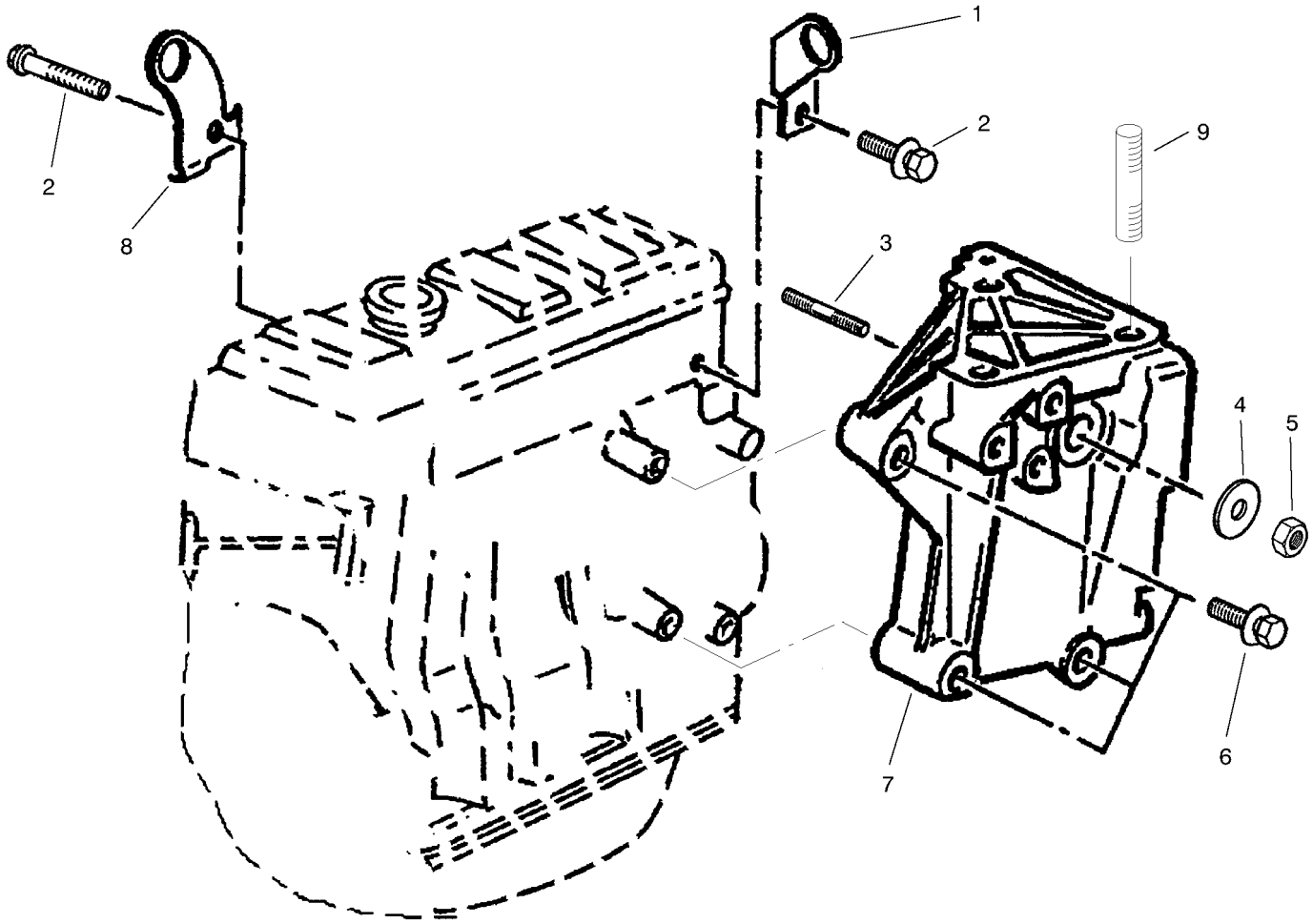

Engine Mount Assembly

Ref.	Part Number	Qty.	Description
1	93-5901	1	Lifting Bracket
2	93-5906	4	Screw
3	93-5905	1	Stud
4	93-5904	1	Plate Washer
5	93-5903	1	Hexagonal Nut
6	93-5902	3	Screw
7	93-5899	1	RH Engine Mount
8	74-7570	1	Lifting Hook
9	93-5900	1	Stud

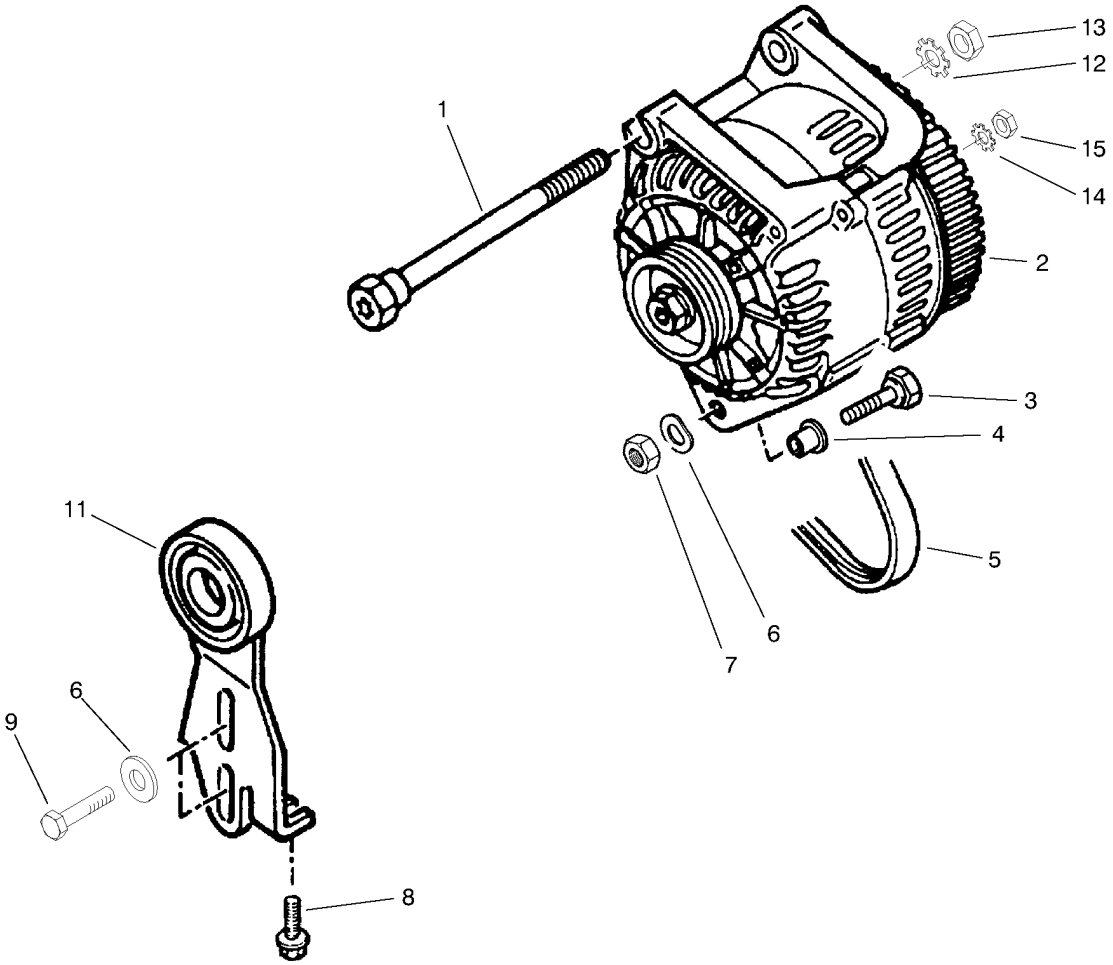

Alternator Assembly

Ref.	*Part Number*	*Qty.*	*Description*
1	93-5908	1	Screw F/W
2	93-5907	1	Alternator F/W
3	94-3221	1	Screw-HH
4	93-5909	1	Ring F/W
5	93-5912	1	Belt F/W
6	33094-00	3	Washer-Plain
7	33024-00	1	Nut-Lock
8	93-5911	1	Screw F/W
9	33114-020	2	Screw-HH
11	93-5910	1	Tensioner F/W
12	3255-8	1	Washer-Lock
13	33004-00	1	Nut-HF
14	3255-10	1	Washer-Lock / EXT
15	48-7880	1	Nut-Hex

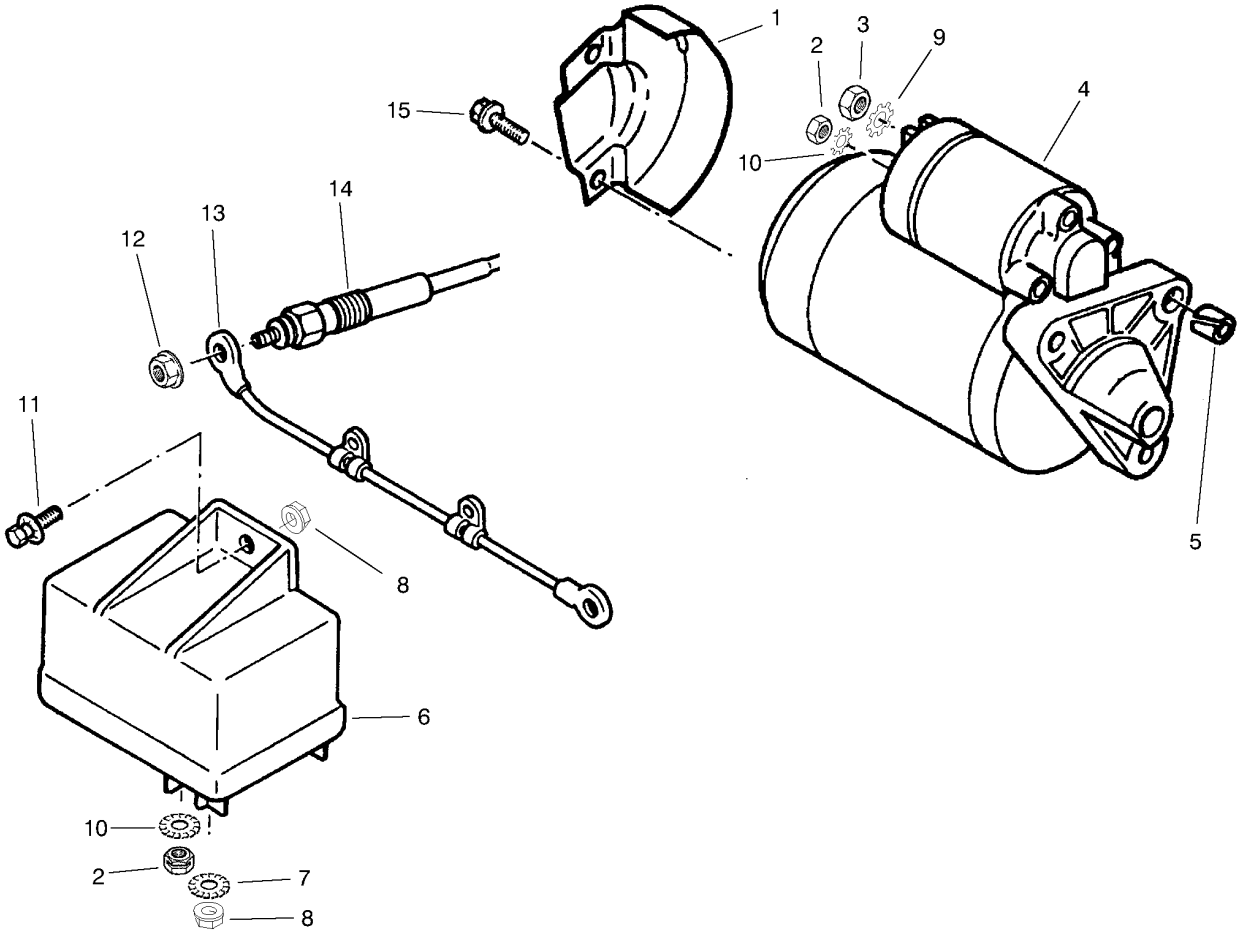

Starter and Glow Plug Assembly

Ref.	*Part Number*	*Qty.*	*Description*
1	93-5916	1	Heat Shield F/W Eng.
2	48-7880	2	Nut-Hex
3	33004-00	1	Nut-HF
4	93-5915	1	Starter
5	93-5917	1	Pin F/W
6	93-5923	1	Preheating Unit F/W
7	3255-7	1	Washer-Lock/EXT
8	33003-00	2	Nut-HF
9	3255-8	1	Washer-Lock
10	3255-10	2	Washer-Lock / EXT
11	33113-020	1	Screw-HH
12	48-7870	4	Nut
13	93-5922	1	Cable
14	93-5921	4	Glow Plug
15	33103-016	2	Screw-HHF

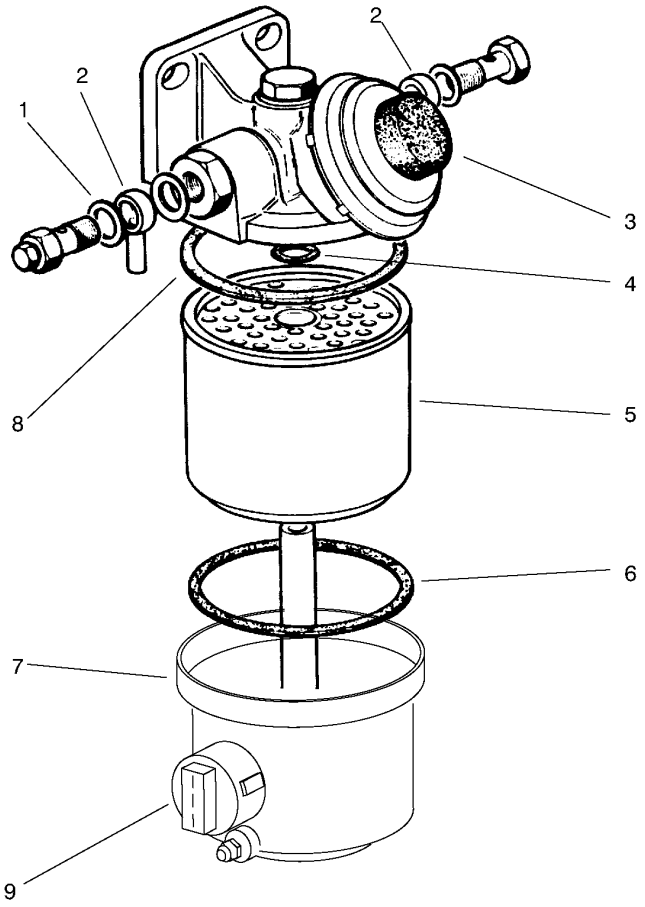

Fuel Filter Assembly

Ref.	*Part Number*	*Qty.*	*Description*
1	76-5180	4	Washer-Copper
2	76-5190	2	Fitting-Adjustable
3	76-5300	1	Asm-Filter, Fuel (Incl. Ref. #7 & 9)
5	76-5220	1	Element-Filter (Incl. Ref. #4, 6 & 8)
6		1	Seal-Gasket
7		1	Cap-Filter, Fuel
8		1	Seal-Gasket
9	76-5320	1	Probe-Sensor, Water

Notes:

Notes:

Notes:

TORO®

Count on it.