FORM NO. 3318–221 REV. A

TORO®

MODEL NO. 20475–6900001 & UP
MODEL NO. 20476–6900001 & UP

PARTS CATALOG

# 21” RECYCLER®
## Rear Bagging Mower

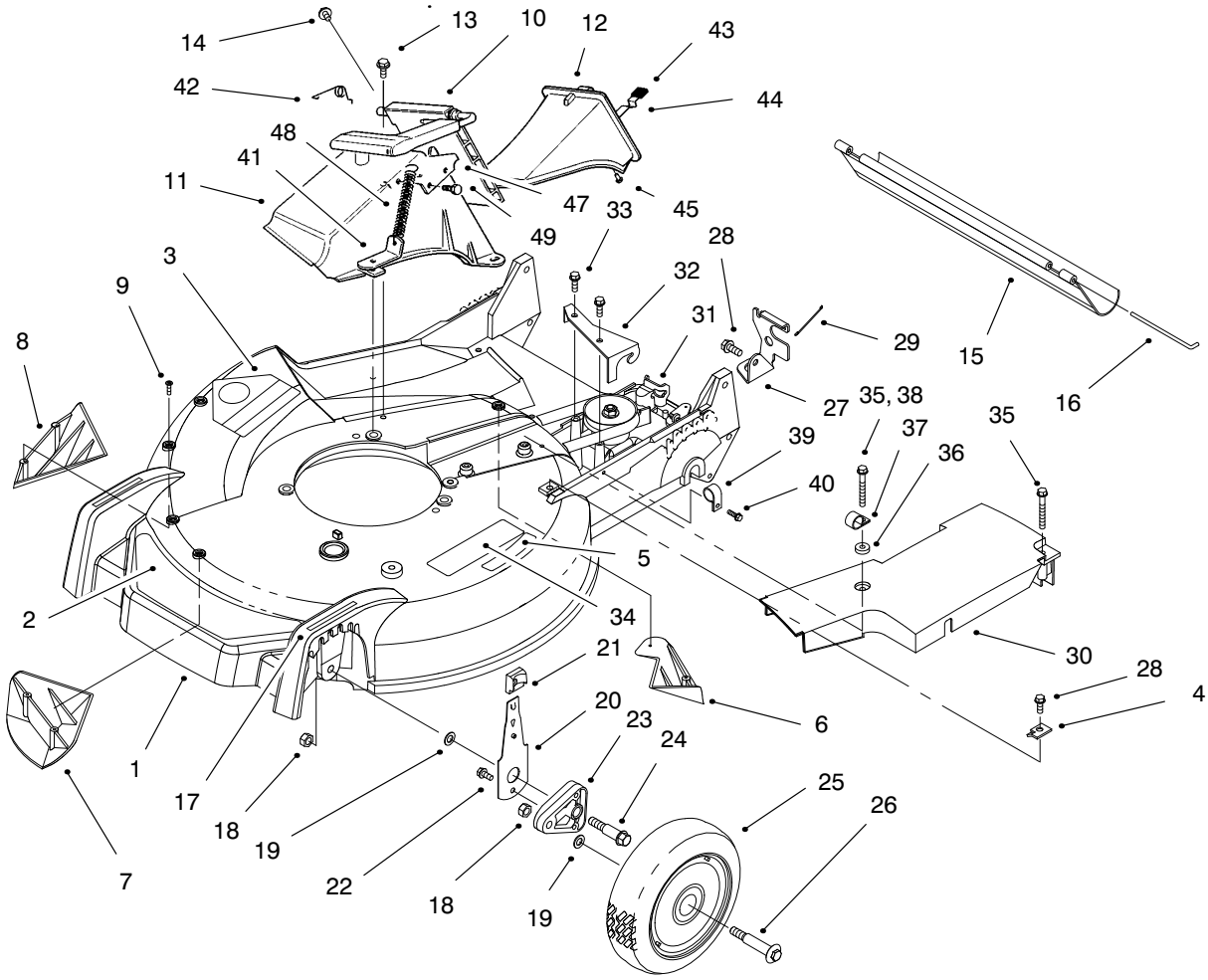


# HOUSING ASSEMBLY

| Ref. No. | Part No. | Description | No. Used |
|---|---|---|---|
| 1 | 16–9589 | Housing – 21” (Incl. Ref. #1, 3, 5–9, & 17 pg. 1) (Incl. Ref. # 34, pg. 2) (Incl. Ref. #17 & 18, pg. 3) | 1 |
| 2 | 93–3696 | Decal – Deck | 1 |
| 3 | 43–8480 | Decal – Danger | 1 |
| 4 | 62–3720 | Clamp – Cable | 1 |
| 5 | 46–7370 | Decal – Step Pad | 1 |
| 6 | 92–1750 | Plate – Kicker Rear | 1 |
| 7 | 92–1720 | Kicker – RH Front | 1 |
| 8 | 92–1730 | Kicker – LH Front | 1 |
| 9 | 32144–111 | Screw – PPH | 6 |
| 10 | 93–7351 | Door – Discharge | 1 |
| 11 | 82–9150 | Chute – Discharge | 1 |
| 12 | 77–0500 | Plug – Discharge (Incl. Ref. #43–45) | 1 |
| 13 | 46–6811 | Screw – Hex Washer Hd. | 3 |
| 14 | 46–6810 | Screw – Hex Washer Hd. | 1 |
| 15 | 44–0580 | Shield – Trailing | 1 |
| 16 | 33–3208 | Rod – Shield | 1 |
| 17 | 92–2279 | Decal – HOC | 4 |
| 18 | 3296–6 | Nut – Lock | 4 |
| 19 | 40–1940 | Washer | 4 |
| 20 | 66–0541 | Spring Arm Ass’y – Front | 2 |
| 21 | 25–7740 | Knob – Arm | 4 |
| 22 | 32144–85 | Screw – Hex Hd. | 2 |
| 23 | 66–0580 | Arm – Pivot | 2 |
| 24 | 66–0560 | Screw – Shoulder | 2 |
| 25 | 14–9989 | Wheel & Tire Assembly | 2 |
| 26 | 27–6232 | Bolt – Wheel | 2 |
| 27 | 82–5680 | Bracket – Adjustment Trac. | 1 |
| 28 | 32144–70 | Screw – Tapping | 4 |
| 29 | 46–7030 | Retainer – Cable | 1 |
| 30 | 82–9910 | Cover – Belt | 1 |
| 31 | 62–6673 | Gear Case Assembly | 1 |

© The TORO Company –1995 REV. 1997
All Rights Reserved

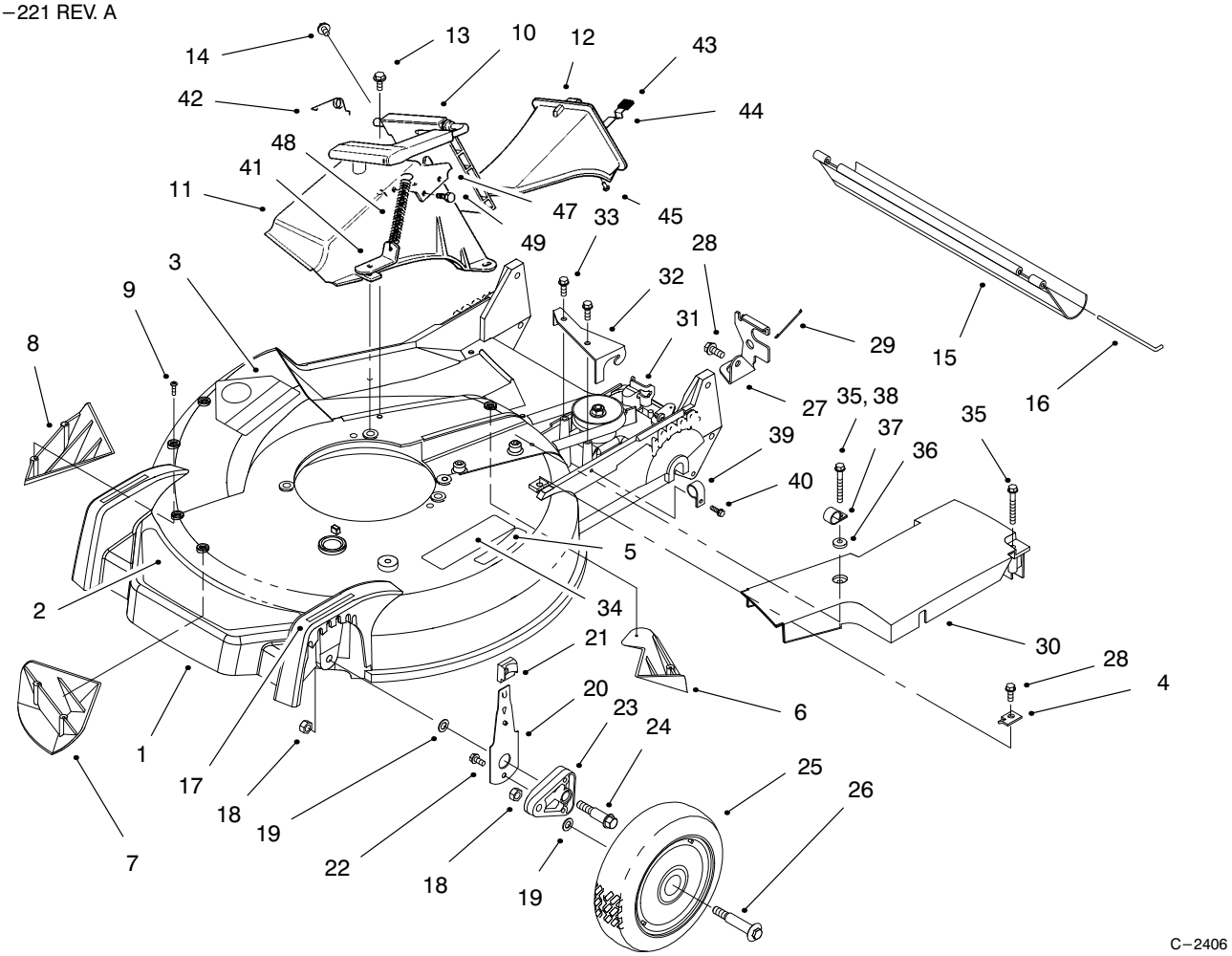


# HOUSING ASSEMBLY (Continued)

| Ref. No. | Part No. | Description | No. Used |
|---|---|---|---|
| 32 | 62−4320 | Bracket − Guide Belt | 1 |
| 33 | 49−2040 | Screw − Hex Hd. | 2 |
| 34 | 93−0248 | Decal − Warning | 1 |
| 35 | 37−7260 | Screw − Tapping (Model No. 20475 Only) | 2 |
| 35 | 37−7260 | Screw − Tapping (Model No. 20476 Only) | 1 |
| 36 | 3−5792 | Washer (Model No. 20476 Only) | 1 |
| 37 | 2412−87 | Clamp − Cable (Model No. 20476 Only) | 1 |
| 38 | 37−7262 | Screw − Special (Model No. 20476 Only) | 1 |

| Ref. No. | Part No. | Description | No. Used |
|---|---|---|---|
| 39 | 2412−83 | R−Clamp (Model No. 20476 Only) | 1 |
| 40 | 32144−112 | Screw − Thr'd Form (Model No. 20476 Only) | 1 |
| 41 | 71−9350 | Bracket − Spring | 1 |
| 42 | 80−3770 | Retainer − Door | 1 |
| 43 | 76−4650 | Grip − Latch | 1 |
| 44 | 76−4640 | Latch − Plug | 1 |
| 45 | 3295−35 | Rivet | 1 |
| 47 | 93−3154 | Plate − Latch | 1 |
| 48 | 76−4660 | Spring − Extension | 1 |
| 49 | 46−8090 | Screw − Tapping | 2 |

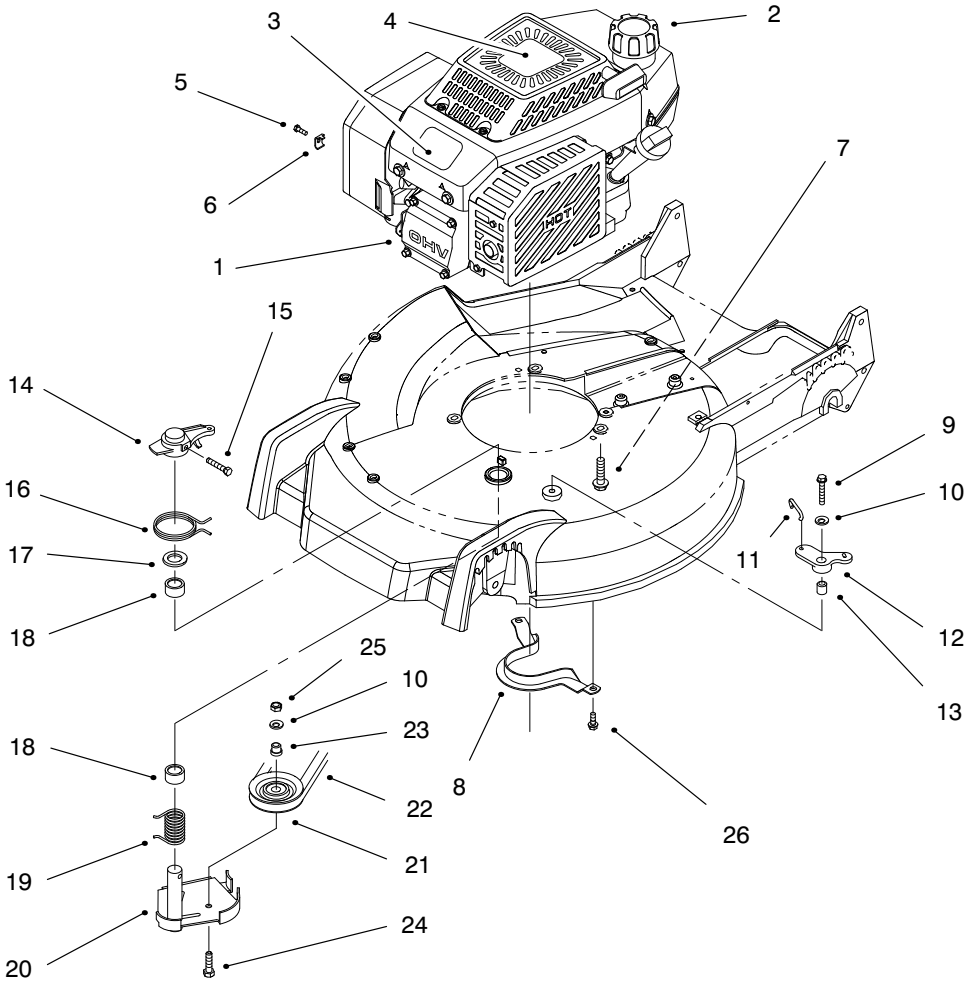


C−2268

# ENGINE ASSEMBLY

| Ref. No. | Part No. | Description | No. Used |
|---|---|---|---|
| 1 | 94−1605 | Engine − GTS 150 (Model No. 20475 Only) | 1 |
| 1 | 94−1606 | Engine − GTS 150 (Model No. 20476 Only) | 1 |
| 2 | 55−3570 | Gas Cap Assembly | 1 |
| 3 | 92−2289 | Plate − Logo Toro | 1 |
| 4 | 93−3699 | Decal − Engine | 1 |
| 5 | 93−8470 | Screw − Clamp (P/W Eng.) | 1 |
| 6 | 2210−249 | Clamp − Casing (P/W Eng.) | 1 |
| 7 | 32144−102 | Screw | 3 |
| 8 | 66−0570 | Guide − Belt | 1 |
| 9 | 32104−107 | Screw − Hex Hd. | 1 |
| 10 | 3256−23 | Washer − Flat | 2 |
| 11 | 49−2810 | Link − Control | 1 |
| 12 | 49−7960 | Crank − Bell | 1 |
| 13 | 49−7950 | Sleeve − Bell Crank | 1 |
| 14 | 49−2820 | Lever | 1 |
| 15 | 32104−96 | Screw − Hex Socket Hd. | 1 |
| 16 | 49−7970 | Spring − Torsion Upper | 1 |
| 17 | 70−1160 | Washer − PM | 1 |
| 18 | 68−9780 | Bearing | 2 |
| 19 | 46−5670 | Spring − Torsion Lower | 1 |
| 20 | 94−1601 | Brake Plate Assembly | 1 |
| 21 | 46−5650 | Pulley − Idler | 1 |
| 22 | 42−0884 | V−Belt − BBC | 1 |
| 23 | 46−5630 | Hub − Pulley Idler | 1 |
| 24 | 322−16 | Screw − Hex Hd. Cap | 1 |
| 25 | 3296−47 | Nut − Lock | 2 |
| 26 | 32144−70 | Screw − Tapping | 2 |
| * | 77−9280 | Short Block | 1 |

*Not Illustrated

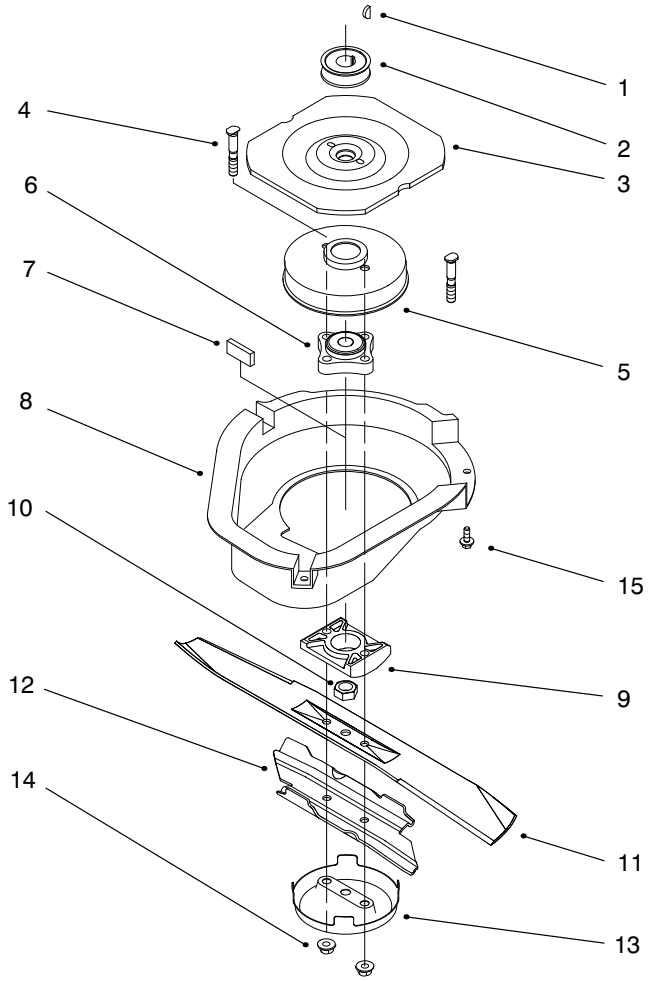


# BLADE BRAKE CLUTCH ASSEMBLY

| Ref. No. | Part No. | Description | No. Used |
|---|---|---|---|
| 1 | 3257−17 | Key − Woodruff | 1 |
| 2 | 62−7560 | Pulley − Driver | 1 |
| 3 | 56−6160 | Flywheel − BBC | 1 |
| 4 | 42−3190 | Bolt − Blade | 2 |
| 5 | 56−6170 | Drum − Brake | 1 |
| 6 | 42−6890 | Hub Assembly − BBC | 1 |
| 7 | 52−3480 | Damper − Vibration | 2 |
| 8 | 46−5692 | Shield − BBC | 1 |

| Ref. No. | Part No. | Description | No. Used |
|---|---|---|---|
| 9 | 93−4126 | Spacer − Blade | 1 |
| 10 | 3296−33 | Nut − Lock | 1 |
| 11 | 93−4106 | Blade − 21” | 1 |
| 12 | 93−4181 | Stiffener − Blade | 1 |
| 13 | 80−2770 | Cup − Anti Scalp | 1 |
| 14 | 54−9190 | Nut − Lock | 2 |
| 15 | 46−6811 | Screw − Hex Washer Hd. | 3 |

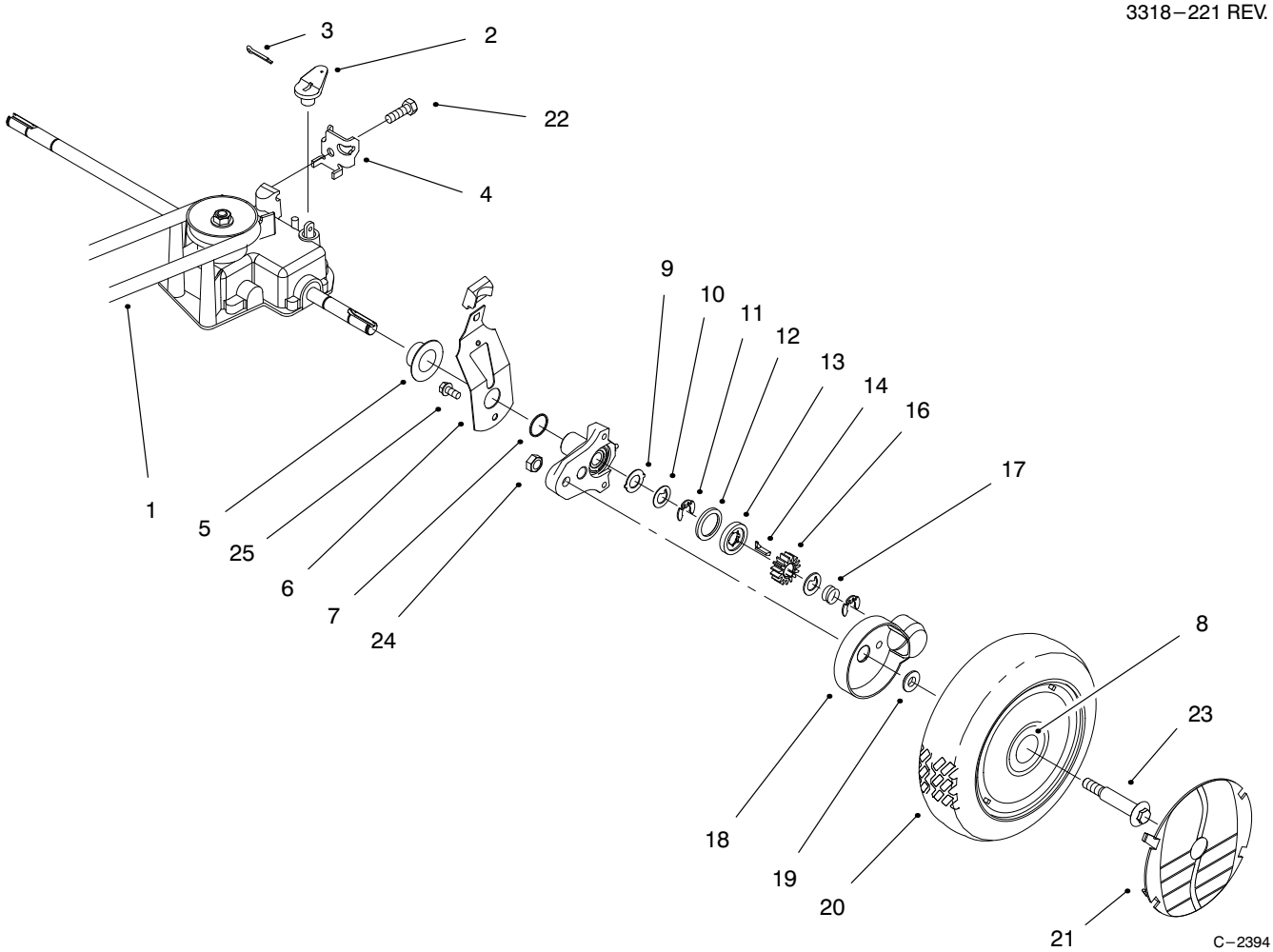


# REAR AXLE ASSEMBLY

| Ref. No. | Part No. | Description | No. Used |
|---|---|---|---|
| 1 | 62−3900 | V−Belt | 1 |
| 2 | 60−8821 | Lever − Shift | 1 |
| 3 | 3272−10 | Pin − Cotter | 1 |
| 4 | 82−8780 | Retainer − Cable | 1 |
| 5 | 42−3520 | Cap − End | 2 |
| 6 | 63−8721 | Spring Arm Ass'y | 2 |
| 7 | 237−153 | O−Ring | 2 |
| 8 | 27−6250 | Bushing − Wheel | 4 |
| 9 | 65−4730 | Washer − Thrust | 2 |
| 10 | 65−4740 | Washer − Thrust Keyed | 4 |
| 11 | 65−2720 | Ring − Retaining | 4 |
| 12 | 65−4710 | Ring − Friction | 2 |
| 13 | 65−4760 | Washer | 2 |

| Ref. No. | Part No. | Description | No. Used |
|---|---|---|---|
| 14 | 66−6050 | Key − Rocking LH | 1 |
| * | 66−6040 | Key − Rocking RH | 1 |
| 16 | 65−4750 | Gear − Pinion | 2 |
| 17 | 65−4720 | Spring − Compression | 2 |
| 18 | 74−1660 | Cover − Wheel | 2 |
| 19 | 74−1671 | Spacer − Cover Wheel | 2 |
| 20 | 16−0029 | Wheel & Tire Assembly (Incl. Ref. #8) | 2 |
| 21 | 91−2253 | Cover − Wheel | 1 |
| 22 | 32144−70 | Screw − Tapping | 1 |
| 23 | 27−6232 | Bolt − Wheel | 4 |
| 24 | 3296−6 | Nut − Lock | 2 |
| 25 | 32144−85 | Screw − Hex Hd. Cap | 2 |

*Not Illustrated

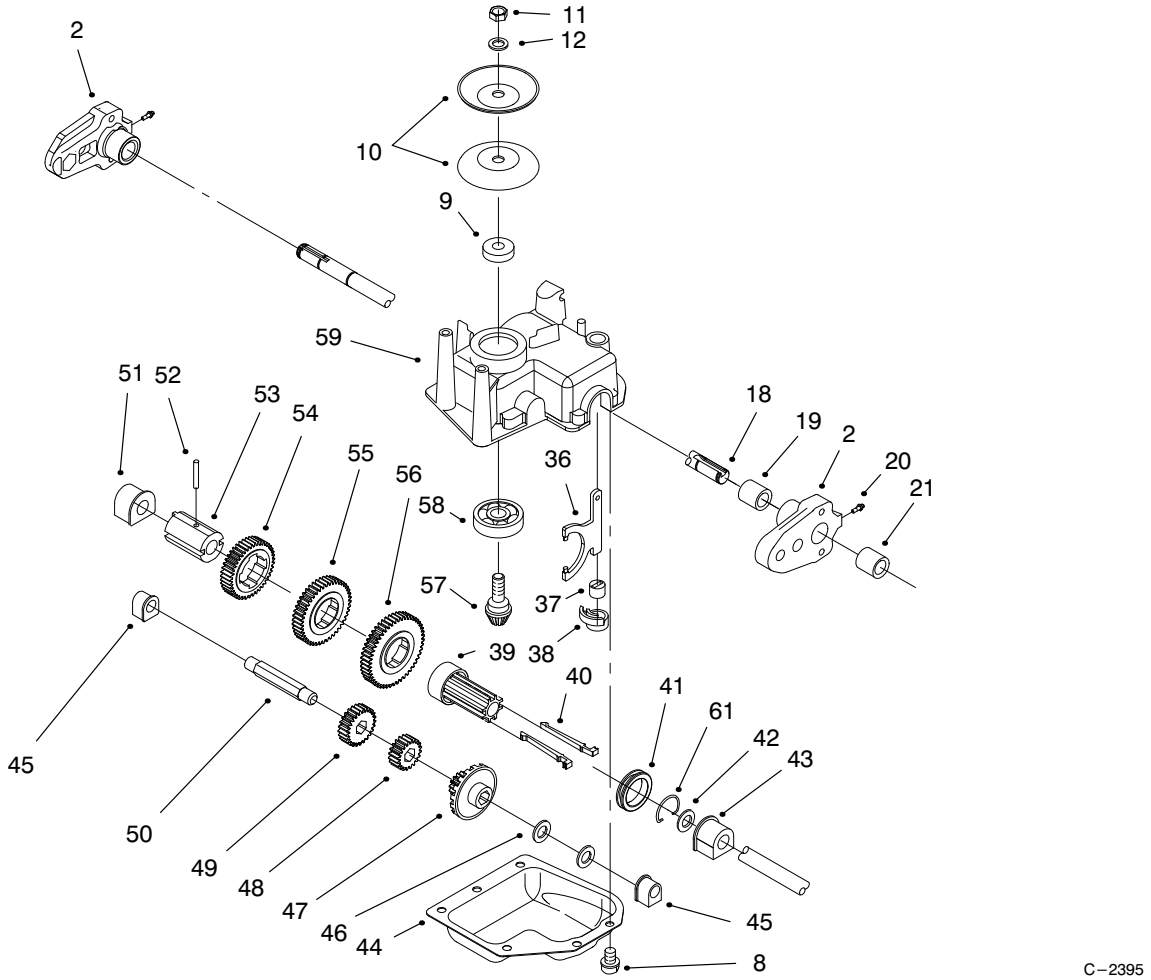


# GEAR CASE ASSEMBLY

| Ref. No. | Part No. | Description | No. Used |
|---|---|---|---|
| 2 | 63−8701−03 | Pivot Arm Assembly (Incl. Ref # 19, 20, & 21) | 2 |
| 8 | 49−2040 | Screw − Self Tapping | 6 |
| 9 | 62−6660 | Spacer | 1 |
| 10 | 60−8840 | Pulley − Half | 2 |
| 11 | 3296−5 | Locknut | 1 |
| 12 | 3256−24 | Washer − Flat | 1 |
| 18 | 65−4770 | Shaft − Output | 1 |
| 19 | 70−9760 | Bushing | 2 |
| 20 | 302−56 | Fitting − Grease | 2 |
| 21 | 48−2060 | Needle Bearing | 2 |
| 36 | 60−8870 | Yoke − Shift | 1 |
| 37 | 29−9570 | Bushing − Yoke | 1 |
| 38 | 60−8810 | Retainer − Shift Fork | 1 |
| 39 | 76−0780 | Sleeve − Shift Key | 1 |
| 40 | 76−0760 | Key − Shift | 2 |
| 41 | 76−0770 | Collar − Shift | 1 |
| 42 | 36−4780 | Washer − Thrust | 1 |
| 43 | 60−8770 | Bushing − Output Shaft | 1 |

| Ref. No. | Part No. | Description | No. Used |
|---|---|---|---|
| 44 | 60−8730 | Cover − Gear Case | 1 |
| 45 | 60−8750 | Bushing − Int. Shaft | 2 |
| 46 | 36−4791 | Washer − Thrust | 2 |
| 47 | 55−3760 | Gear − Pinion 15 Tooth | 1 |
| 48 | 55−3780 | Gear − Pinion 20 Tooth | 1 |
| 49 | 55−3800 | Gear − Pinion | 1 |
| 50 | 60−8800 | Shaft − Intermediate | 1 |
| 51 | 60−8850 | Bushing − Output Shaft | 1 |
| 52 | 32121−120 | Pin − Coil | 1 |
| 53 | 60−8790 | Sleeve − Gear | 1 |
| 54 | 55−3810 | Gear − 39 Tooth 3rd Gear | 1 |
| 55 | 55−3790 | Gear − 44 Tooth 2nd Gear | 1 |
| 56 | 55−3770 | Gear − 49 Tooth 1st Gear | 1 |
| 57 | 60−8890 | Pinion − Bevel | 1 |
| 58 | 38−7820 | Bearing − Ball | 1 |
| 59 | 60−8710 | Gear Case − Upper | 1 |
| 61 | 65−5250 | Clip − Spring | 1 |
| * | 62−6673 | Gear Case Assembly | 1 |

*Not Illustrated

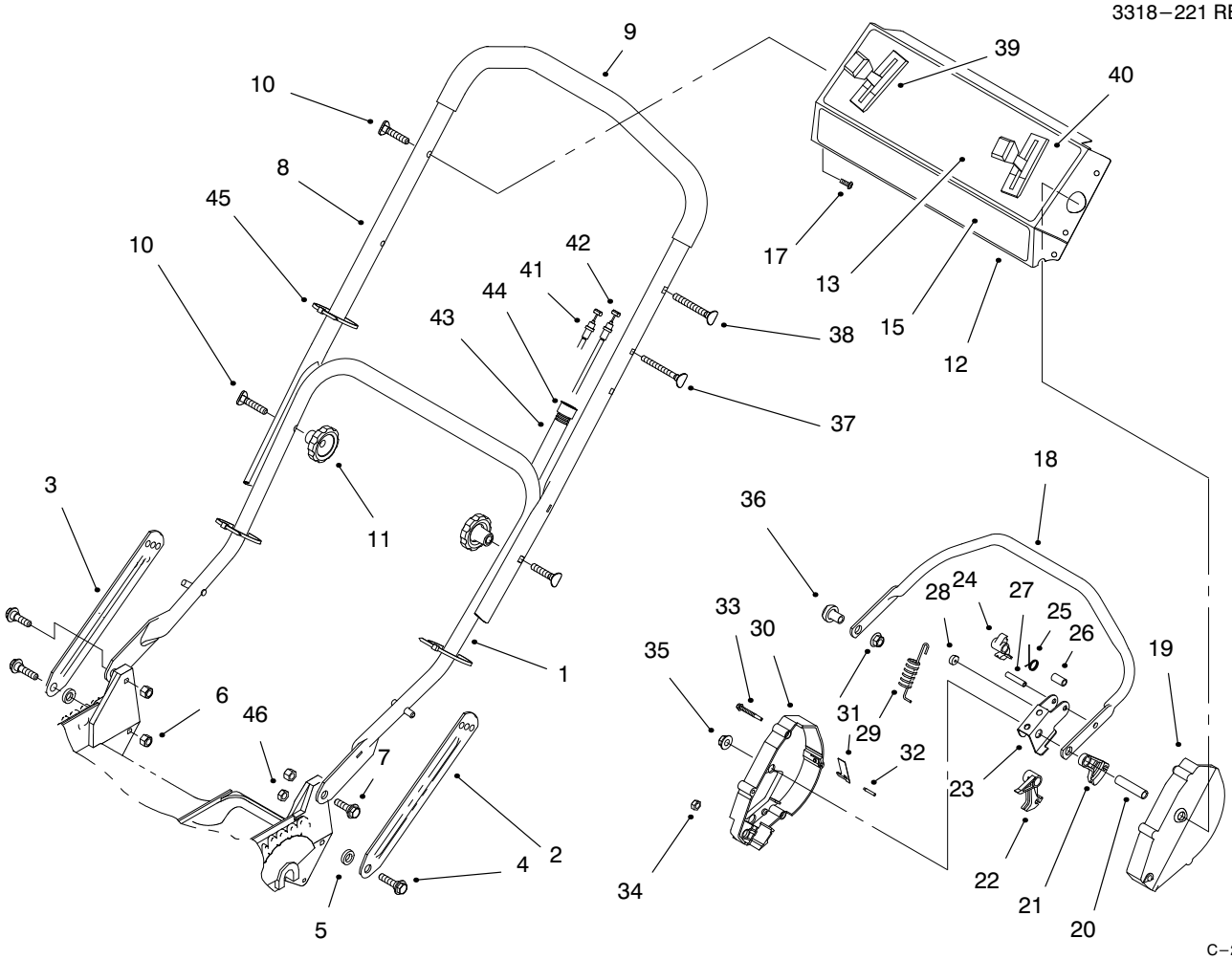


# HANDLE ASSEMBLY (Model No. 20475 Only)

| Ref. No. | Part No. | Description | No. Used |
|---|---|---|---|
| 1 | 43−1362 | Handle − Lower | 1 |
| 2 | 84−8361 | Latch − Handle LH | 1 |
| 3 | 84−8401 | Latch − Handle RH | 1 |
| 4 | 27−7210 | Screw − Shoulder | 2 |
| 5 | 3−3287 | Spacer | 2 |
| 6 | 3296−72 | Nut − Lock | 3 |
| 7 | 27−7211 | Screw − Shoulder | 2 |
| 8 | 92−2277 | Handle − Upper | 1 |
| 9 | 92−4086 | Grip − Foam | 1 |
| 10 | 92−2260 | Screw − Handle | 3 |
| 11 | 19−4050 | Knob | 2 |
| 12 | 16−9569 | Panel − Control (Incl. Ref. #13) | 1 |
| 13 | 93−7167 | Decal − Instruction | 1 |
| 15 | 93−3697 | Decal − Panel Front | 1 |
| 17 | 92−9665 | Screw − Phillips Hd. | 4 |
| 18 | 52−7430 | Bar − Control | 1 |
| 19 | 46−5460 | Housing − Control LH | 1 |
| 20 | 46−5590 | Spacer | 1 |
| 21 | 46−5520 | Lever − Traction | 1 |
| 22 | 66−0180 | Rocker | 1 |
| 23 | 46−5540 | Lever − Cable | 1 |
| 24 | 46−5530 | Hook − Control | 1 |

| Ref. No. | Part No. | Description | No. Used |
|---|---|---|---|
| 25 | 46−5510 | Spring − Torsion | 1 |
| 26 | 46−5550 | Bushing − PM | 1 |
| 27 | 32121−9 | Pin − Roll | 1 |
| 28 | 66−0170 | Washer − Nylon | 1 |
| 29 | 66−0190 | Spring − Detent | 1 |
| 30 | 66−0160 | Housing − Control RH | 1 |
| 31 | 52−7410 | Spring − Leaf | 1 |
| 32 | 57−6290 | Pin − Insert | 1 |
| 33 | 46−7040 | Screw − Hex Washer Hd. | 3 |
| 34 | 3296−75 | Nut − Lock | 1 |
| 35 | 3296−74 | Nut − Flange | 2 |
| 36 | 49−1630 | Spacer − Support | 1 |
| 37 | 92−2267 | Screw − Handle | 1 |
| 38 | 92−2261 | Screw − Handle | 1 |
| 39 | 76−2712 | Control − Speed Ground | 1 |
| 40 | 71−8391 | Control − Control | 1 |
| 41 | 83−6600 | Cable − Clutch | 1 |
| 42 | 46−5480 | Cable − Traction | 1 |
| 43 | 46−6440 | Cover − Cables Control | 1 |
| 44 | 2412−50 | Clip − Tubing Convoluted | 4 |
| 45 | 3290−378 | Tie − Cable | 3 |
| 46 | 3296−47 | Nut − Lock | 1 |

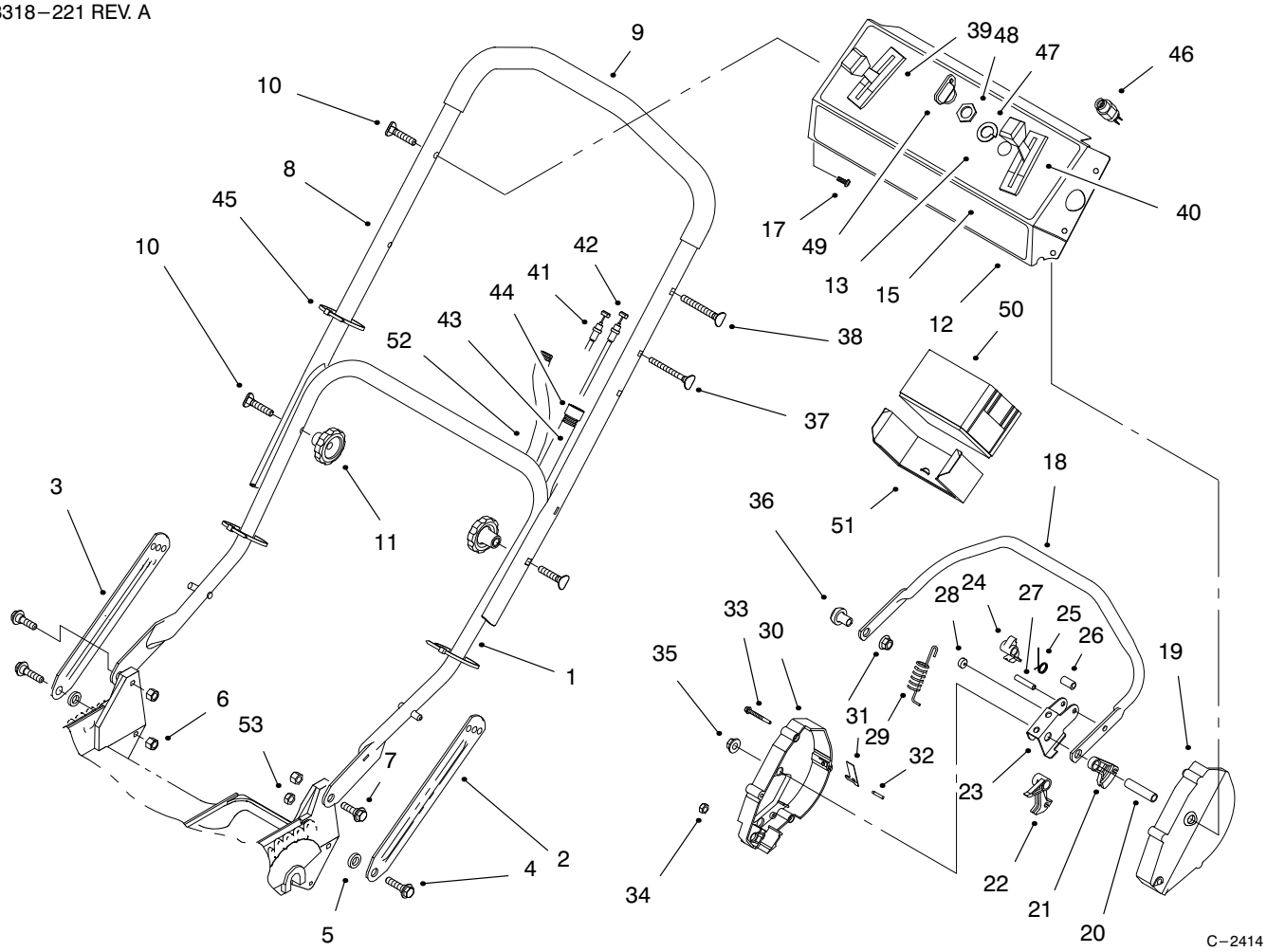


# HANDLE ASSEMBLY (Model No. 20476 Only)

| Ref. No. | Part No. | Description | No. Used |
|---|---|---|---|
| 1 | 43−1362 | Handle − Lower | 1 |
| 2 | 84−8361 | Latch − Handle LH | 1 |
| 3 | 84−8401 | Latch − Handle RH | 1 |
| 4 | 27−7210 | Screw − Shoulder | 2 |
| 5 | 3−3287 | Spacer | 2 |
| 6 | 3296−72 | Nut − Lock | 3 |
| 7 | 27−7211 | Screw − Shoulder | 2 |
| 8 | 92−2277 | Handle − Upper | 1 |
| 9 | 92−4086 | Grip − Foam | 1 |
| 10 | 92−2260 | Screw − Handle | 3 |
| 11 | 19−4050 | Knob | 2 |
| 12 | 16−9579 | Panel − Control (Incl. Ref. #13) | 1 |
| 13 | 93−7168 | Decal − Instruction | 1 |
| 15 | 92−3146 | Decal − Panel Front | 1 |
| 17 | 92−9665 | Screw − Phillips Hd. | 4 |
| 18 | 52−7430 | Bar − Control | 1 |
| 19 | 46−5460 | Housing − Control LH | 1 |
| 20 | 46−5590 | Spacer | 1 |
| 21 | 46−5520 | Lever − Traction | 1 |
| 22 | 66−0180 | Rocker | 1 |
| 23 | 46−5540 | Lever − Cable | 1 |
| 24 | 46−5530 | Hook − Control | 1 |
| 25 | 46−5510 | Spring − Torsion | 1 |
| 26 | 46−5550 | Bushing − PM | 1 |
| 27 | 32121−9 | Pin − Roll | 1 |
| 28 | 66−0170 | Washer − Nylon | 1 |

| Ref. No. | Part No. | Description | No. Used |
|---|---|---|---|
| 29 | 66−0190 | Spring − Detent | 1 |
| 30 | 66−0160 | Housing − Control RH | 1 |
| 31 | 52−7410 | Spring − Leaf | 1 |
| 32 | 57−6290 | Pin − Insert | 1 |
| 33 | 46−7040 | Screw − Hex Washer Hd. | 3 |
| 34 | 3296−75 | Nut − Lock | 1 |
| 35 | 3296−74 | Nut − Flange | 2 |
| 36 | 49−1630 | Spacer − Support | 1 |
| 37 | 92−2267 | Screw − Handle | 1 |
| 38 | 92−2261 | Screw − Handle | 1 |
| 39 | 76−2712 | Control − Speed Ground | 1 |
| 40 | 71−8391 | Control − Control | 1 |
| 41 | 83−6600 | Cable − Clutch | 1 |
| 42 | 46−5480 | Cable − Traction | 1 |
| 43 | 46−6440 | Cover − Cables Control | 1 |
| 44 | 2412−50 | Clip − Tubing Convoluted | 3 |
| 45 | 3290−378 | Tie − Cable | 5 |
| 46 | 46−5780 | Switch − Starter (Incl. Ref. #47 & 48) | 1 |
| 47 | 3254−5 | Washer − Lock | 1 |
| 48 | 218−461 | Nut − Hex | 1 |
| 49 | 63−8360 | Key − Ignition | 1 |
| 50 | 55−7520 | Battery Assembly | 1 |
| 51 | 55−8180 | Retainer − Battery | 1 |
| 52 | 80−4790 | Harness − Wire | 1 |
| 53 | 3296−47 | Nut − Lock | 1 |
| * | 92−1743 | Charger − Battery | 1 |

*Not Illustrated

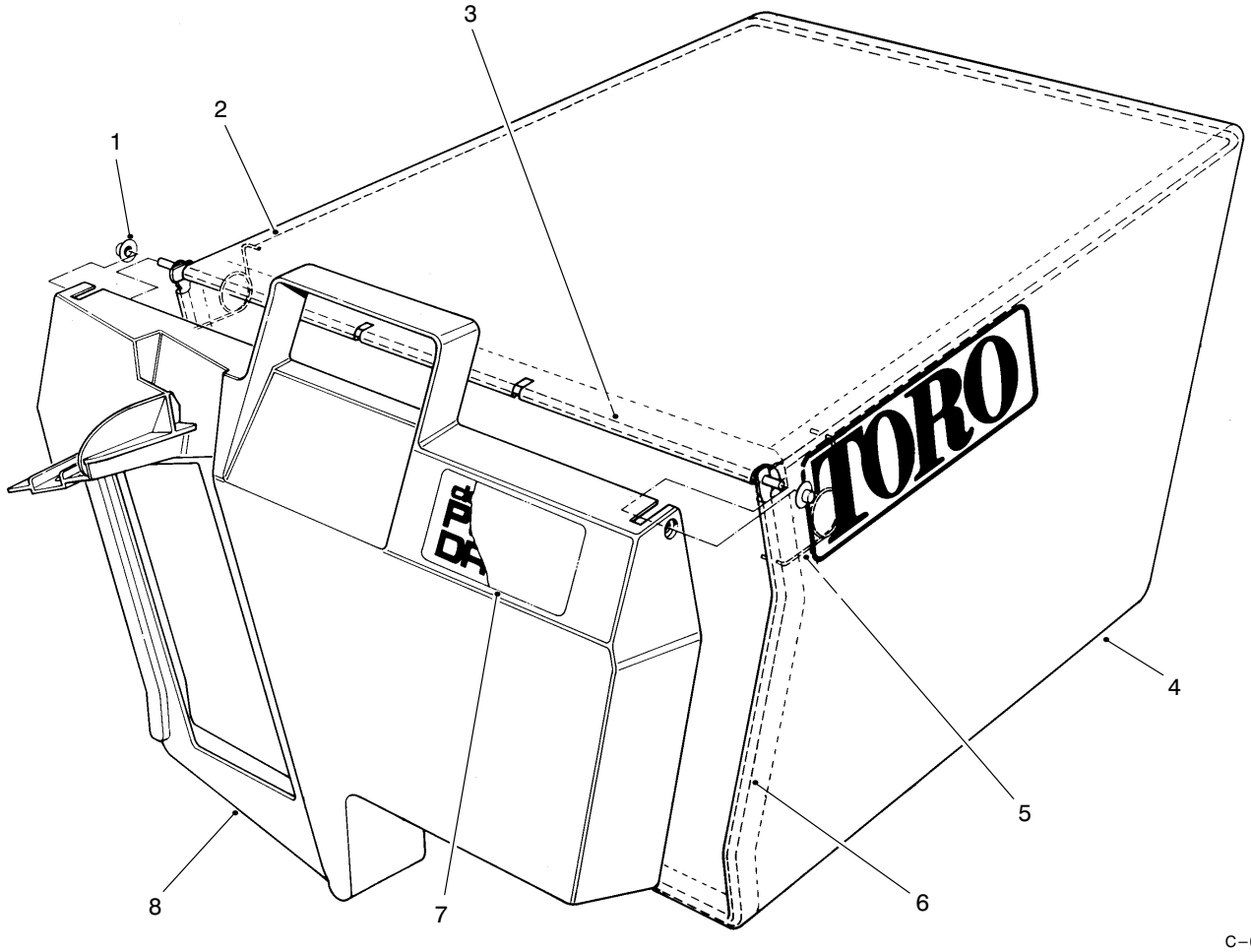


C−0331

# BAG ASSEMBLY PART NO. 11−0189

| Ref. No. | Part No. | Description | No. Used |
|---|---|---|---|
| 1 | 3290−422 | Nut − Push | 2 |
| 2 | 42−4030 | Frame − Upper Bag | 1 |
| 3 | 33−4820 | Hinge − Bag Door | 1 |
| 4 | 8−2759 | Bag − Grass | 1 |

| Ref. No. | Part No. | Description | No. Used |
|---|---|---|---|
| 5 | 36−6910 | Spring | 2 |
| 6 | 42−4020 | Frame − Bag | 1 |
| 7 | 66−2150 | Decal − Bag Door | 1 |
| 8 | 37−1393 | Door − Grass Bag | 1 |

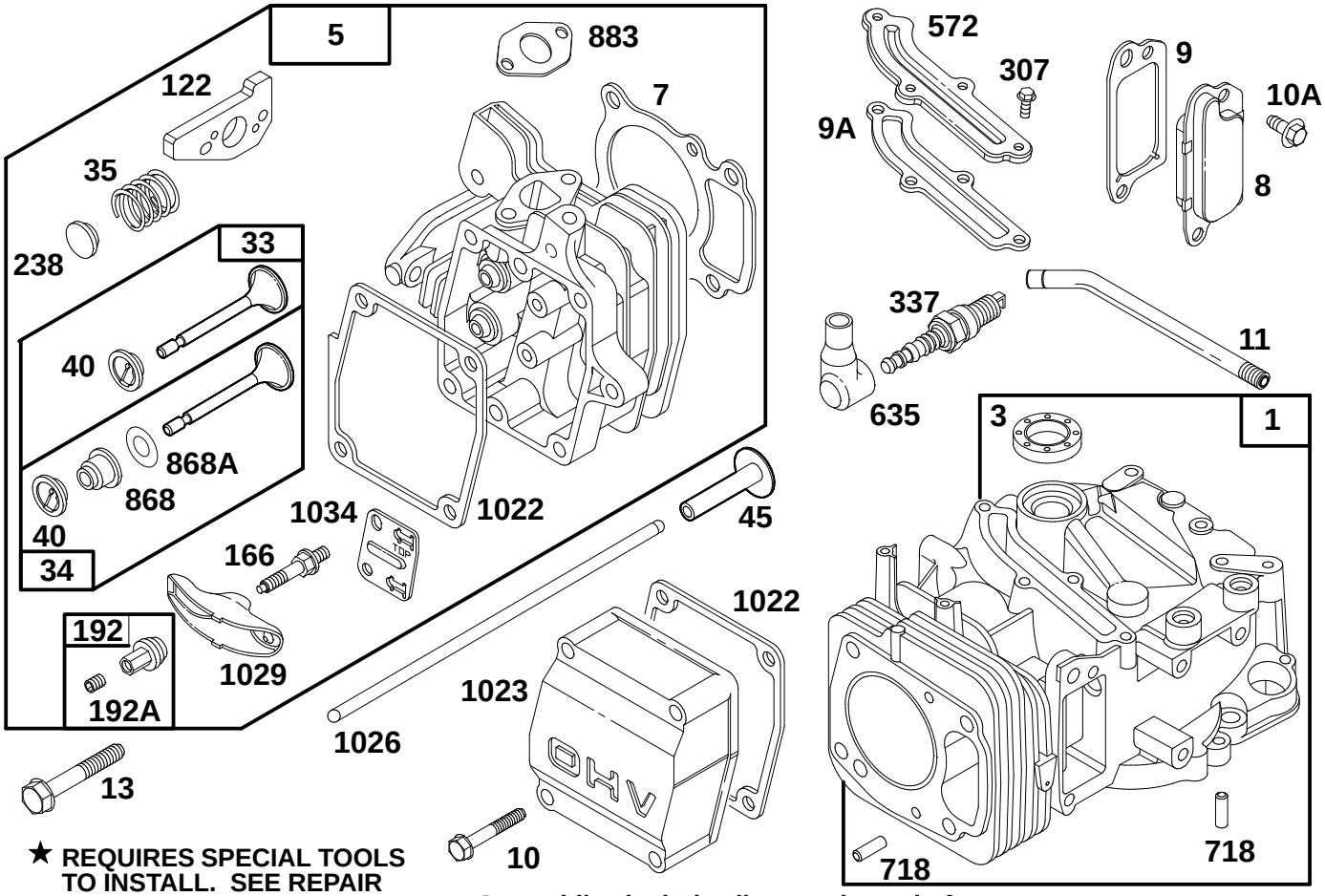


★ REQUIRES SPECIAL TOOLS TO INSTALL. SEE REPAIR INSTRUCTION MANUAL.

**Assemblies include all parts shown in frames.**

# ENGINE GTS 150 (Model No. 20475 Only)

| Ref. No. | Part No. | Description | No. Used |
|---|---|---|---|
| 1 | 77−7590 | Cylinder Assy | 1 |
| †3 | 77−9060 | Seal − Oil | 1 |
| 5 | 77−7730 | Head − Cylinder | 1 |
| †7 | 77−7740 | Gasket − Cylinder Head | 1 |
| 8 | 77−9300 | Breather Assy | 1 |
| †9 | 77−9250 | Gasket − Breather | 1 |
| †9A | 77−7410 | Gasket − Breather | 1 |
| 10 | 77−7360 | Screw − Hex Head (Valve Cover) | 1 |
| 10A | 77−9200 | Screw − Hex Head | 1 |
| 11 | 77−9410 | Tube − Breather | 1 |
| 13 | 77−7630 | Screw − Cylinder Head | 1 |
| 33 | 77−7860 | Valve − Exhaust | 1 |
| 34 | 77−7880 | Valve − Intake | 1 |
| 35 | 77−7810 | Spring − Valve | 1 |
| 40 | 77−7870 | Retainer − Spring | 1 |
| 45 | 77−7610 | Tappet − Valve | 1 |
| ‡122 | 77−7820 | Adapter Assy | 1 |
| 166 | 77−7780 | Stud − Rocker Arm | 1 |

| Ref. No. | Part No. | Description | No. Used |
|---|---|---|---|
| 192 | 77−7910 | Ball & Screw − Rocker Arm | 1 |
| 192A | 77−9310 | Screw − Set | 1 |
| 238 | 77−7800 | Cap − Valve | 1 |
| 307 | 77−7420 | Screw − Cover Mtg (Breather Cover) | 1 |
| 337 | 77−7330 | Plug − Spark | 1 |
| 572 | 77−7400 | Cover − Breather | 1 |
| 635 | 77−7340 | Elbow − Spark Plug | 1 |
| 718 | 77−7600 | Pin − Dowel | 1 |
| †868 | 77−7890 | Seal Assy − Valve | 1 |
| †868A | 77−7900 | Gasket − Valve | 1 |
| †883 | 77−7760 | Gasket − Exhaust | 1 |
| †1022 | 77−7320 | Gasket − Rocker Cover | 1 |
| 1023 | 77−9320 | Cover − Valve | 1 |
| 1026 | 77−7620 | Rod − Push | 1 |
| 1029 | 77−7790 | Arm − Rocker | 1 |
| 1034 | 77−7770 | Guide − Push Rod | 1 |

† Included in Gasket Set − Part No. 77−8900

‡Included in Carburetor Overhaul Kit − Part No. 77−9580

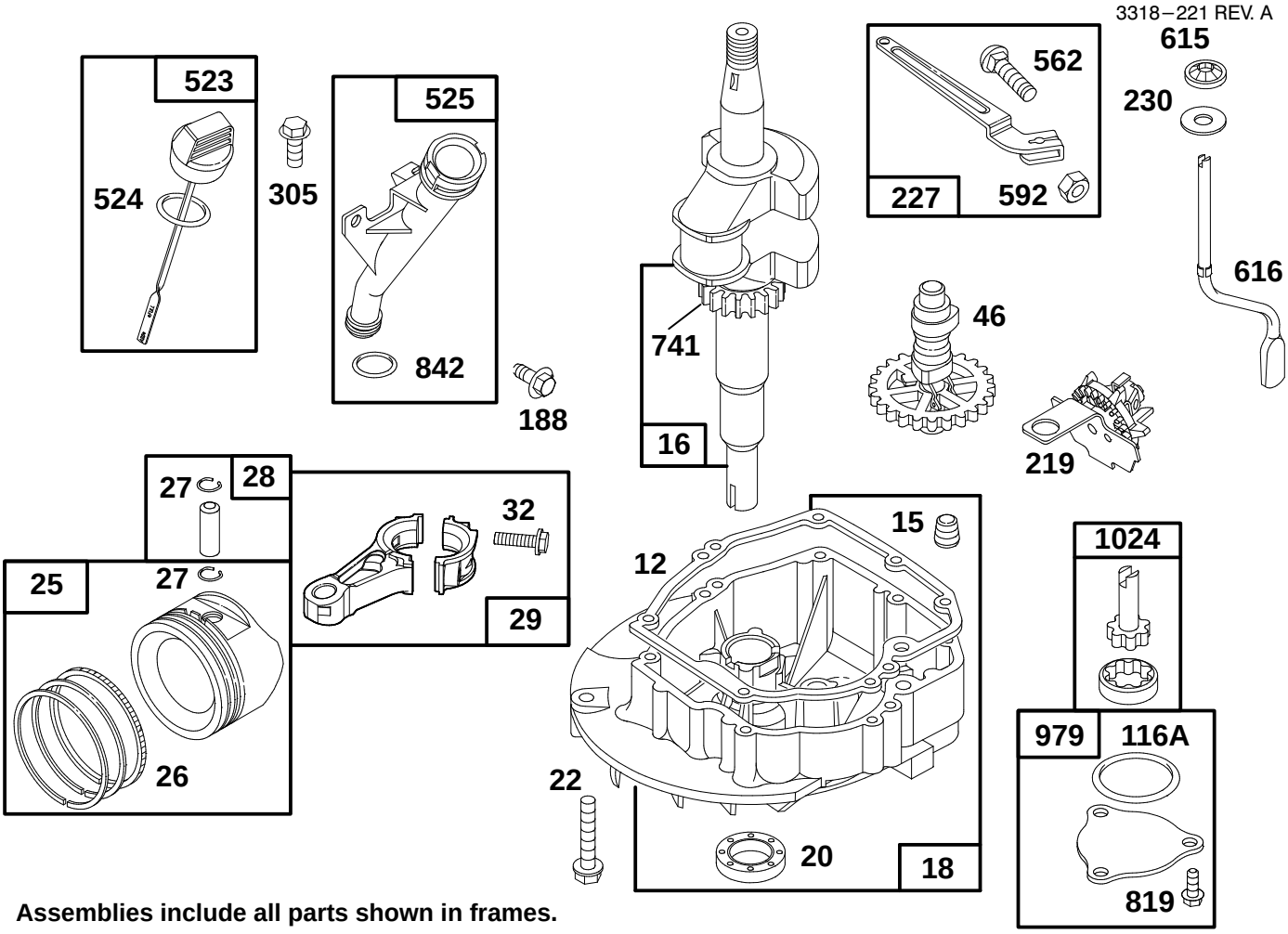


**Assemblies include all parts shown in frames.**

# ENGINE GTS 150 (Model No. 20475 Only)

| Ref. No. | Part No. | Description | No. Used |
|---|---|---|---|
| †12 | 77−7550 | Gasket − Engine Base | 1 |
| 15 | 77−9240 | Plug − Pipe | 1 |
| 16 | 77−7510 | Crankshaft | |
| | | Note: Order Part No. 77−7540 For Timing Gear Key | 1 |
| 18 | 77−7560 | Base − Engine | 1 |
| †20 | 77−7570 | Seal − Oil | 1 |
| 22 | 77−9070 | Screw − Engine Base | 1 |
| 25 | 77−7690 | Piston Assy (Std.) | 1 |
| 26 | 77−7700 | Ring Set (Std.) | 1 |
| 27 | 77−7710 | Lock − Piston Pin | 1 |
| 28 | 77−9340 | Pin Assembly − Piston | 1 |
| 29 | 77−7670 | Rod − Connecting | 1 |
| 32 | 77−7680 | Screw − Connecting Rod | 1 |
| 46 | 77−7490 | Gear − Cam | 1 |
| †116A | 77−7660 | O−Ring | 1 |
| 188 | 77−9360 | Screw − Hex Head | 1 |

| Ref. No. | Part No. | Description | No. Used |
|---|---|---|---|
| 219 | 77−7500 | Gear − Governor | 1 |
| 227 | 77−7370 | Lever Assembly − Governor | 1 |
| 230 | 77−7470 | Washer | 1 |
| 305 | 77−8310 | Screw − Hex Head | 1 |
| 523 | 77−7260 | Dipstick − Oil | 1 |
| †524 | 77−7270 | Seal − O−Ring | 1 |
| 525 | 77−7280 | Tube − Oil Fill | 1 |
| 562 | 77−7380 | Bolt − Governor Lever | 1 |
| 592 | 77−7390 | Nut − Hex | 1 |
| 615 | 77−7480 | Push Nut | 1 |
| 616 | 77−7460 | Crank − Governor | 1 |
| 741 | 77−7530 | Gear − Timing | 1 |
| †842 | 77−7300 | Seal − O−Ring | 1 |
| 819 | 77−7450 | Screw − Cap | 1 |
| 979 | 77−7650 | Cover − Oil Pump | 1 |
| 1024 | 77−7640 | Pump − Oil | 1 |

† Included in Gasket Set − Part No. 77−8900

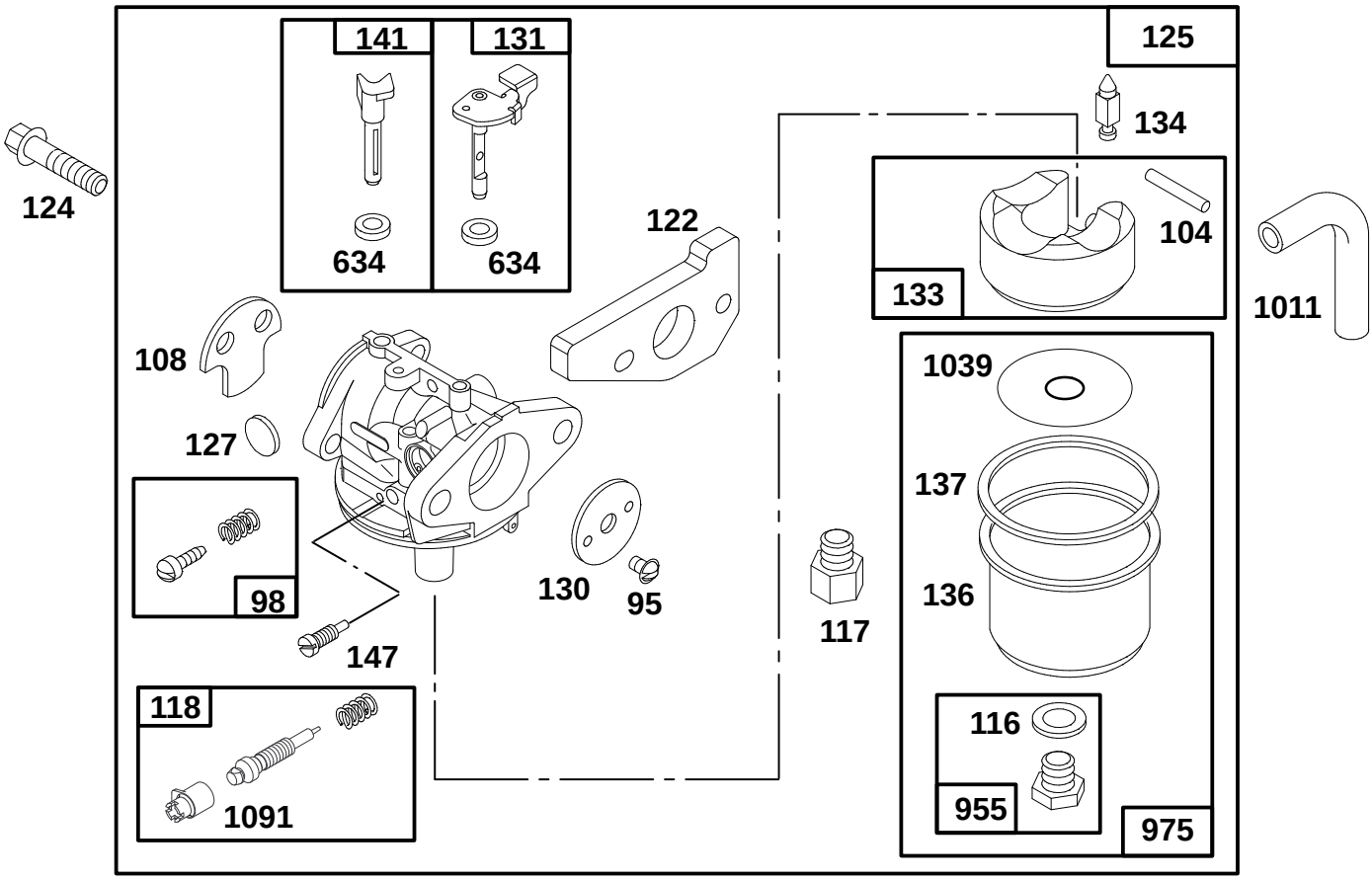


**Assemblies include all parts shown in frames.**

# ENGINE GTS 150 (Model No. 20475 Only)

| Ref. No. | Part No. | Description | No. Used |
|---|---|---|---|
| 95 | 77−8090 | Screw − Valve Mtg | 1 |
| 98 | 77−8240 | Screw − Idle Adj. | 1 |
| ‡104 | 77−8180 | Pin − Float Hinge | 1 |
| 108 | 77−9600 | Valve − Choke | 1 |
| ‡*116 | 77−8210 | Gasket − Sealing | 1 |
| ‡117 | 77−9610 | Jet − Main | 1 |
| | | Note: For High Altitude Jet, Order Part No. 94−1650 | 1 |
| ‡118 | 77−9620 | Valve & Spring − Needle | 1 |
| ‡122 | 77−7820 | Adapter Assy | 1 |
| 124 | 77−7970 | Screw − Hex Head (Carb. Mtg.) | 1 |
| 125 | 77−9630 | Carburetor Assy | 1 |
| ‡127 | 94−1651 | Plug − Welch | 1 |

| Ref. No. | Part No. | Description | No. Used |
|---|---|---|---|
| 130 | 77−8080 | Valve − Throttle | 1 |
| 131 | 77−8160 | Shaft − Throttle | 1 |
| 133 | 77−8170 | Float − Carburetor | 1 |
| ‡134 | 77−8110 | Valve − Inlet (Includes Seat) | 1 |
| 136 | 77−7240 | Bowl − Fuel | 1 |
| ‡*137 | 77−8200 | Gasket − Float Bowl | 1 |
| 141 | 77−8130 | Shaft − Choke | 1 |
| 147 | 77−9640 | Jet − Pilot | 1 |
| *634 | 77−8150 | Washer − Seal | 1 |
| 955 | 77−8220 | Screw − Hex Head | 1 |
| 975 | 77−8190 | Bowl Assy − Carburetor | 1 |
| 1011 | 77−8040 | Tube − Vent | 1 |
| ‡1039 | 77−7250 | Limiter − Float | 1 |
| ‡1091 | 77−9650 | Cap − Limiter | 1 |

‡ Included in Gasket Set − Part No. 77−9580

* Included in Gasket Set − Part No. 77−8930

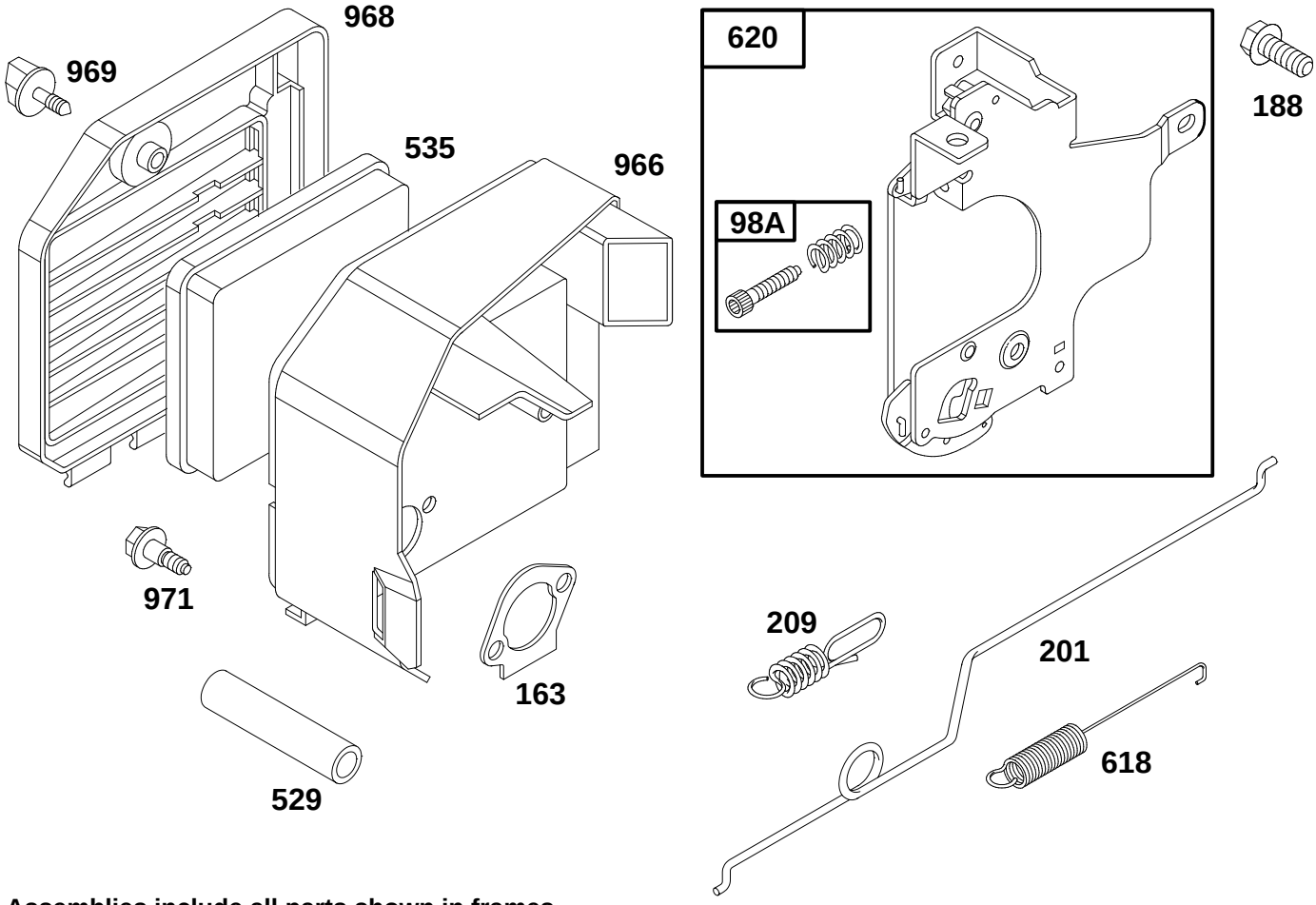


**Assemblies include all parts shown in frames.**

# ENGINE GTS 150 (Model No. 20475 Only)

| Ref. No. | Part No. | Description | No. Used |
|---|---|---|---|
| 98A | 77−8020 | Screw Assy − Speed Adj. | 1 |
| †163 | 77−7960 | Gasket − Air Cleaner | 1 |
| 188 | 77−9360 | Screw − Hex Head | 1 |
| 201 | 77−7980 | Link − Governor | 1 |
| 209 | 77−7990 | Spring − Governor | 1 |
| 529 | 77−8030 | Tube − Breather | 1 |
| 535 | 77−7950 | Element − Filter | 1 |

| Ref. No. | Part No. | Description | No. Used |
|---|---|---|---|
| 618 | 77−8140 | Spring − Choke | 1 |
| 620 | 77−8000 | Bracket − Carburetor | 1 |
| 966 | 77−7940 | Base − Air Cleaner | 1 |
| 968 | 77−7040 | Cover − Air Cleaner | 1 |
| 969 | 77−7920 | Screw − Air Cleaner | 1 |
| 971 | 77−7930 | Screw − Air Cleaner | 1 |

† Included in Gasket Set − Part No. 77−8900

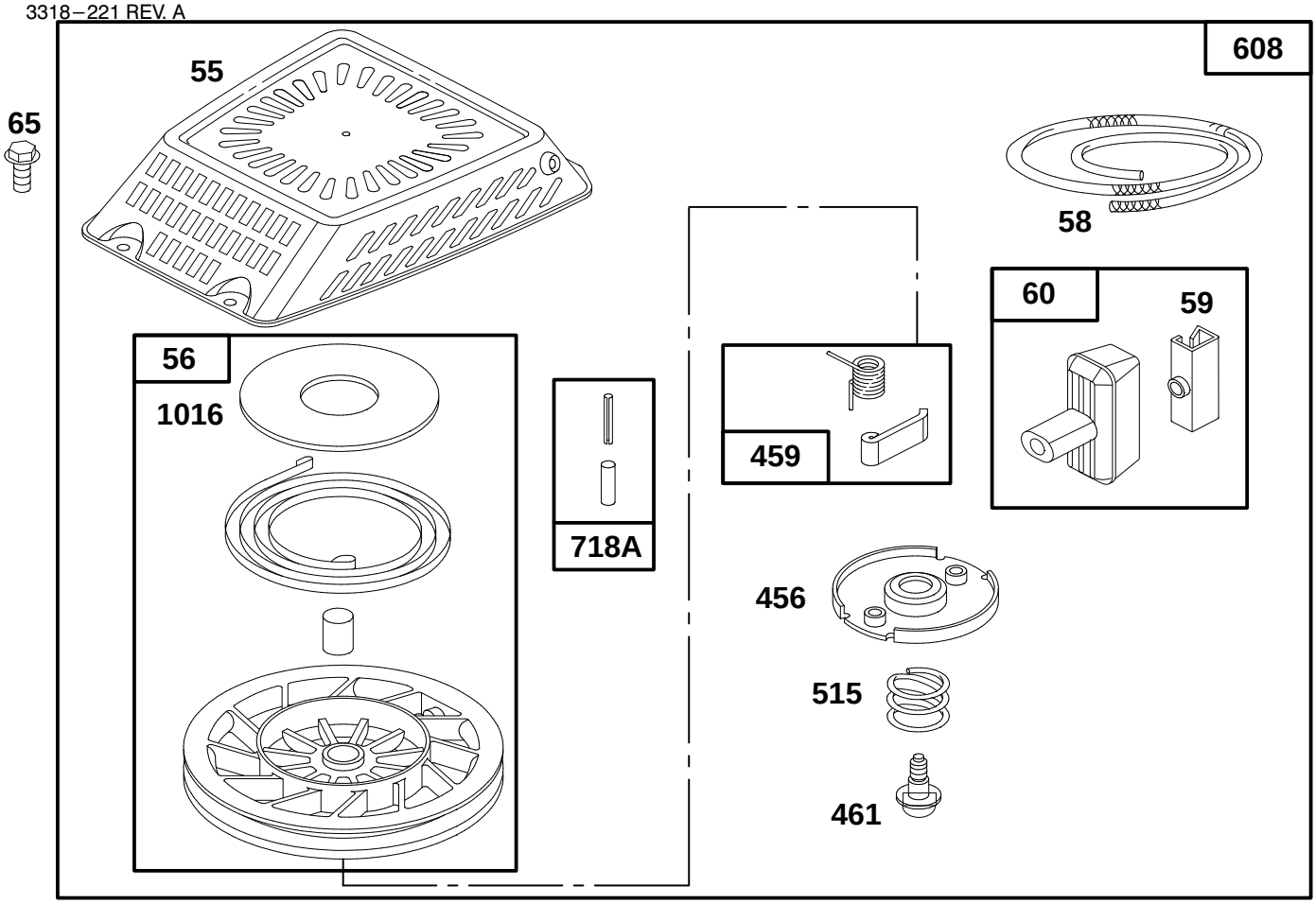


**Assemblies include all parts shown in frames.**

# ENGINE GTS 150 (Model No. 20475 Only)

| Ref. No. | Part No. | Description | No. Used |
|---|---|---|---|
| 55 | 77−8460 | Housing − Rewind Starter | 1 |
| 56 | 77−9270 | Pulley − Rewind Starter | 1 |
| 58 | 77−8480 | Rope − Starter (Cut To Suit) | 1 |
| 59 | 77−7210 | Insert − Rewind Handle | 1 |
| 60 | 77−8510 | Handle − Rewind Starter | 1 |
| 65 | 77−8300 | Screw − Hex Head | 1 |
| 456 | 77−8470 | Retainer − Rewind Starter | 1 |
| 459 | 77−8530 | Pawl − Starter | 1 |
| 461 | 77−8490 | Screw − Rewind Starter | 1 |
| 515 | 77−8500 | Spring − Torsion | 1 |
| 608 | 77−8450 | Starter Assy − Rewind | 1 |

| Ref. No. | Part No. | Description | No. Used |
|---|---|---|---|
| 718A | 77−8550 | Pin − Spring | 1 |
| 1016 | 77−8570 | Cover − Spring | 1 |
| | | Model No. 20475−6900001 & Up may have been assembled with Starter Ass'y No. 77−8450 or 94−1678. Part identification will be required for service part replacement. | |

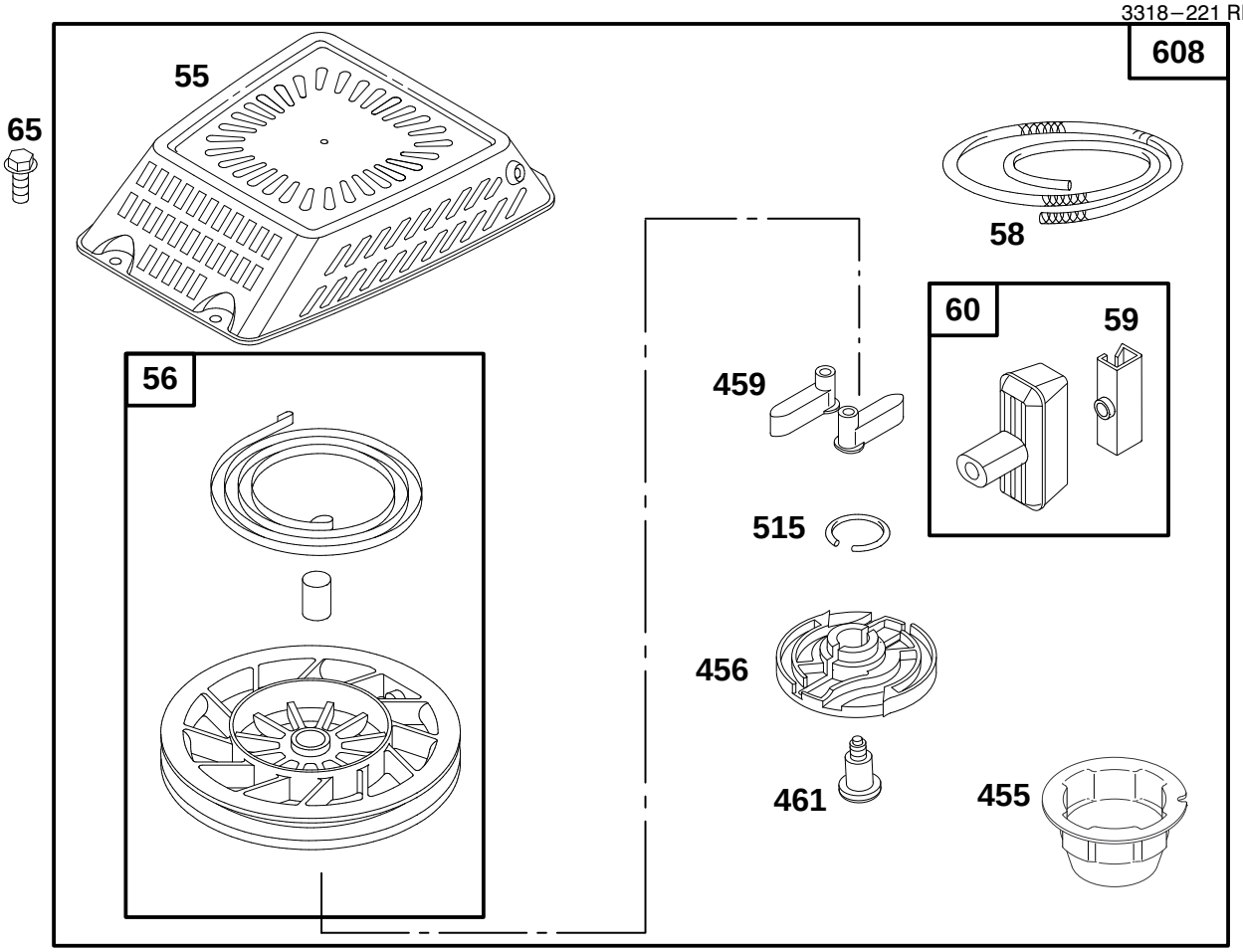


**Assemblies include all parts shown in frames.**

# ENGINE GTS 150 (Model No. 20475 Only)

| Ref. No. | Part No. | Description | No. Used |
|---|---|---|---|
| 55 | 94–1656 | Housing–Rewind Starter | 1 |
| 56 | 94–1657 | Pulley–Rewind Starter | 1 |
| 58 | 94–1668 | Rope–Starter (Cut To Suit) | 1 |
| 59 | 77–7210 | Insert–Rewind Handle | 1 |
| 60 | 77–8520 | Handle–Rewind Starter | 1 |
| 65 | 77–8300 | Screw–Hex Head | 1 |
| 455 | 94–1653 | Cup – Starter | 1 |
| 456 | 94–1659 | Retainer–Rewind Starter | 1 |
| 459 | 94–1654 | Pawl–Starter | 1 |
| 461 | 94–1660 | Screw–Rewind Starter | 1 |
| 515 | 94–1655 | Spring–Torsion | 1 |

| Ref. No. | Part No. | Description | No. Used |
|---|---|---|---|
| 608 | 94–1678 | Starter Assy–Rewind<br><br>Model No. 20475–6900001 & Up may have been assembled with Starter Ass'y No. 77–8450 or 94–1678. Part identification will be required for service part replacement. | 1 |

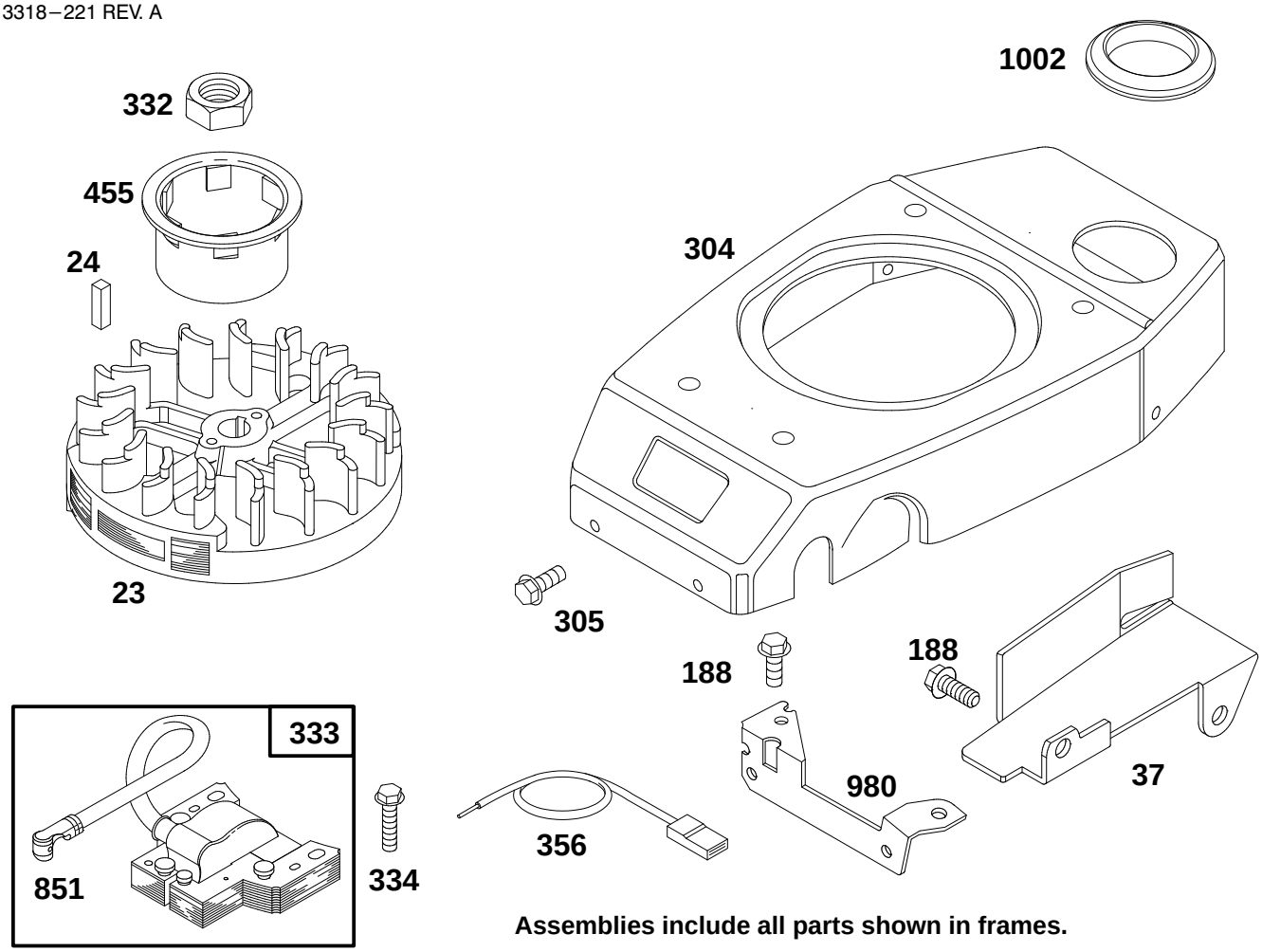


**Assemblies include all parts shown in frames.**

# ENGINE GTS 150 (Model No. 20475 Only)

| Ref. No. | Part No. | Description | No. Used |
|---|---|---|---|
| 23 | 77−8330 | Flywheel − Magneto | 1 |
| 24 | 77−8340 | Key − Flywheel | 1 |
| 37 | 77−7190 | Guard − Flywheel | 1 |
| 188 | 77−9360 | Screw − Hex Head | 1 |
| 304 | 77−8270 | Housing − Blower | 1 |
| 305 | 77−8310 | Screw − Hex Head | 1 |
| 332 | 77−8360 | Nut − Flywheel | 1 |

| Ref. No. | Part No. | Description | No. Used |
|---|---|---|---|
| 333 | 77−8420 | Armature − Magneto | 1 |
| 334 | 77−9420 | Screw − Armature Mtg. | 1 |
| 356 | 77−8400 | Wire − Ground | 1 |
| 455 | 77−8350 | Cup − Starter | 1 |
| 851 | 77−8430 | Terminal − Spark Plug | 1 |
| 980 | 77−7140 | Bracket − Blower Housing | 1 |
| 1002 | 77−7180 | Grommet | 1 |

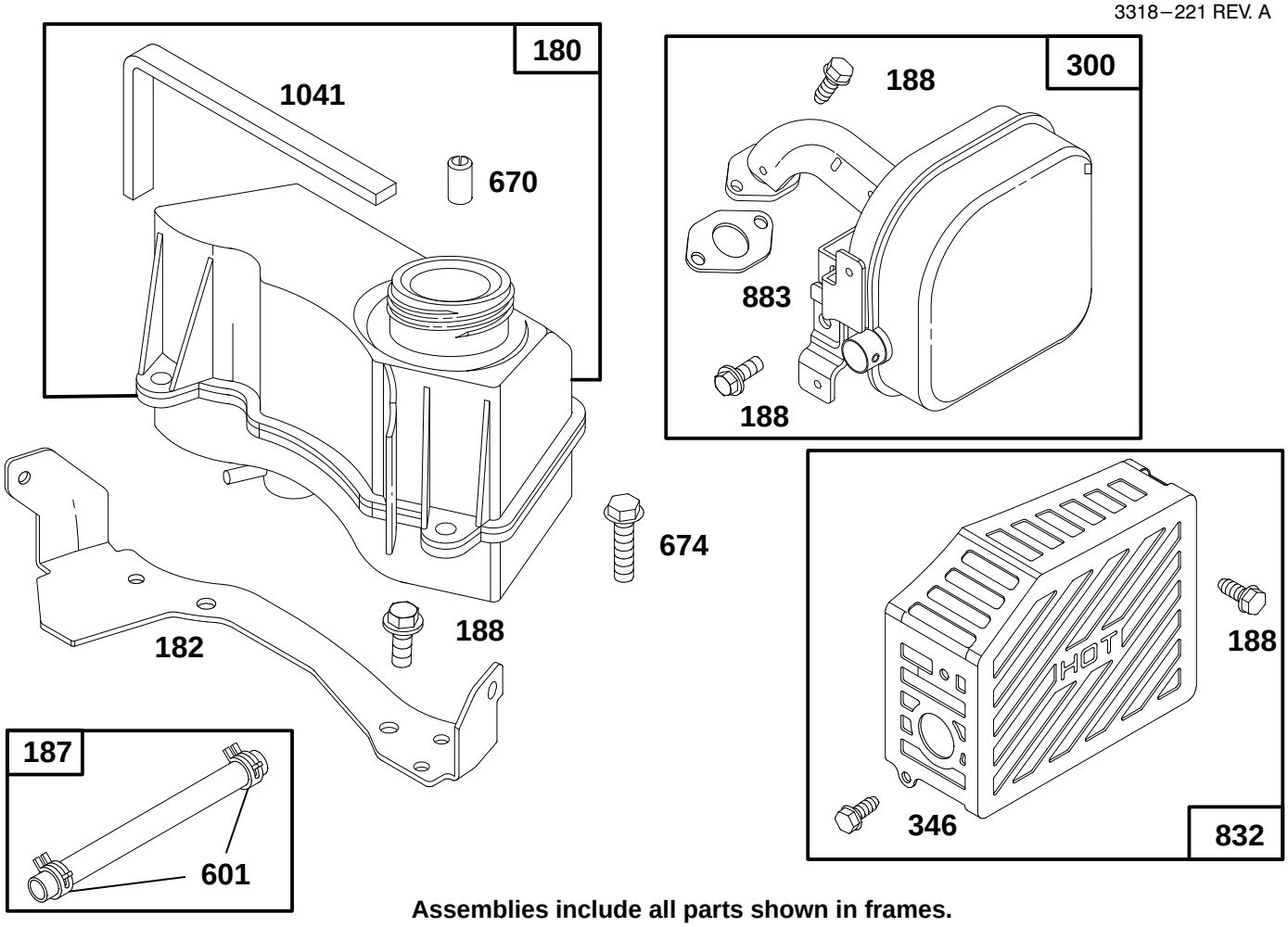


**Assemblies include all parts shown in frames.**

# ENGINE GTS 150 (Model No. 20475 Only)

| Ref. No. | Part No. | Description | No. Used |
|---|---|---|---|
| 180 | 77−8580 | Tank Assy − Fuel | 1 |
| 182 | 77−7170 | Bracket − Fuel Tank | 1 |
| 187 | 78−4100 | Hose − Fuel (Cut To Suit) | 1 |
| 188 | 77−9360 | Screw − Cap | 1 |
| 300 | 77−8640 | Muffler − Exhaust | 1 |
| 346 | 77−9430 | Screw − Hex Head | 1 |

| Ref. No. | Part No. | Description | No. Used |
|---|---|---|---|
| 601 | 78−4690 | Clamp − Hose | 1 |
| 670 | 77−9030 | Spacer − Fuel Tank | 1 |
| 674 | 77−8600 | Screw − Tank Mtg. | 1 |
| †832 | 77−9290 | Guard − Muffler | 1 |
| †1041 | 77−8590 | Seal − Foam | 1 |

† Included in Gasket Set − Part No. 77−8900

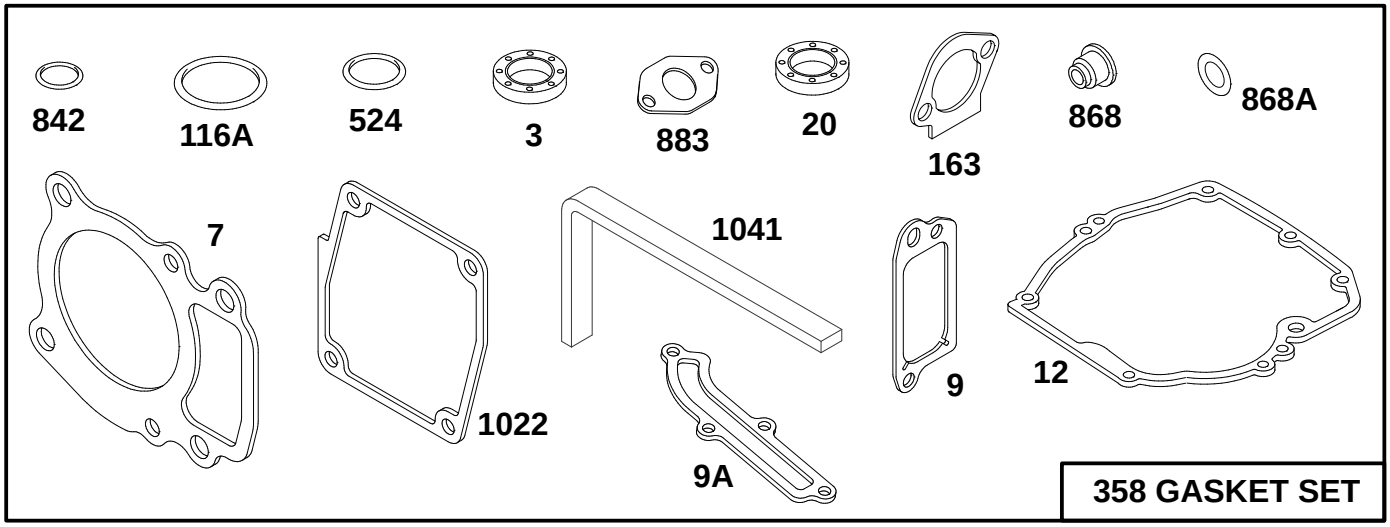


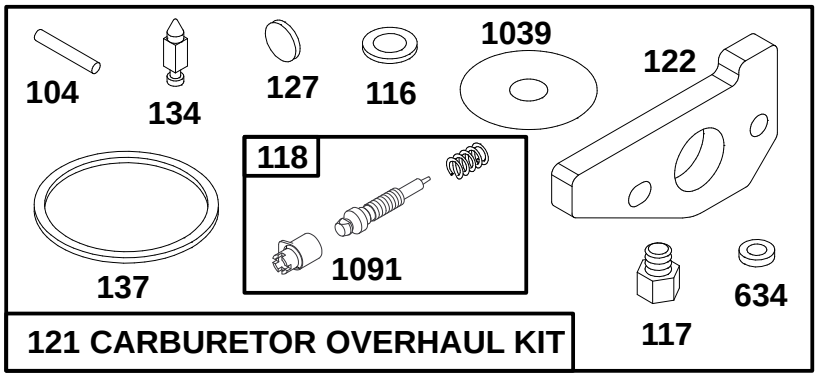


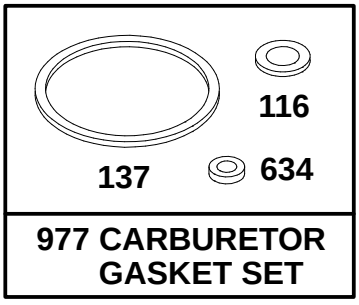


**Assemblies include all parts shown in frames.**

# ENGINE GTS 150 (Model No. 20475 Only)

| Ref. No. | Part No. | Description | No. Used |
|---|---|---|---|
| †3 | 77−9060 | Seal − Oil (Upper) | 1 |
| †7 | 77−7740 | Gasket − Cylinder Head | 1 |
| †9 | 77−9250 | Gasket − Breather | 1 |
| †9A | 77−7410 | Gasket − Breather Cover | 1 |
| †12 | 77−7550 | Gasket − Engine Base | 1 |
| †20 | 77−7570 | Seal − Oil (Lower) | 1 |
| ‡104 | 77−8180 | Pin − Float Hinge | 1 |
| ‡*116 | 77−8210 | Washer − Bowl | 1 |
| †116A | 77−7660 | Seal − O−Ring | 1 |
| ‡117 | 77−9610 | Jet − Main | 1 |
| ‡118 | 77−9620 | Valve & Spring − Needle | 1 |
| 121 | 77−9580 | Overhaul Kit − Carburetor | 1 |
| ‡122 | 77−7820 | Adapter Assy | 1 |
| ‡127 | 94−1651 | Plug − Welch | 1 |
| ‡134 | 77−8110 | Valve − Inlet (Includes Seat) | 1 |

| Ref. No. | Part No. | Description | No. Used |
|---|---|---|---|
| ‡*137 | 77−8200 | Gasket − Float Bowl | 1 |
| †163 | 77−7960 | Gasket − Air Cleaner | 1 |
| 358 | 77−8900 | Gasket Set | 1 |
| †524 | 77−7270 | Seal − O−Ring (Oil Fill Cap) | 1 |
| *634 | 77−8150 | Washer − Seal | 1 |
| †842 | 77−7300 | Seal − O−Ring (Oil Fill Tube) | 1 |
| †868 | 77−7890 | Seal Assy − Valve | 1 |
| †868A | 77−7900 | Seal − Valve | 1 |
| †883 | 77−7760 | Gasket − Exhaust | 1 |
| 977 | 77−8930 | Carburetor Gasket Set | 1 |
| †1022 | 77−7320 | Gasket − Rocker Cover | 1 |
| ‡1039 | 77−7250 | Limiter − Float | 1 |
| †1041 | 77−8590 | Seal − Foam (Fuel Tank) | 1 |
| ‡1091 | 77−9650 | Cap − Limiter | 1 |

‡ Incl. in Carburetor Overhaul Kit − Part No. 77−9580
*Incl. in Carburetor Gasket Set − Part No. 77−8930

† Included in Gasket Set − Part No. 77−8900

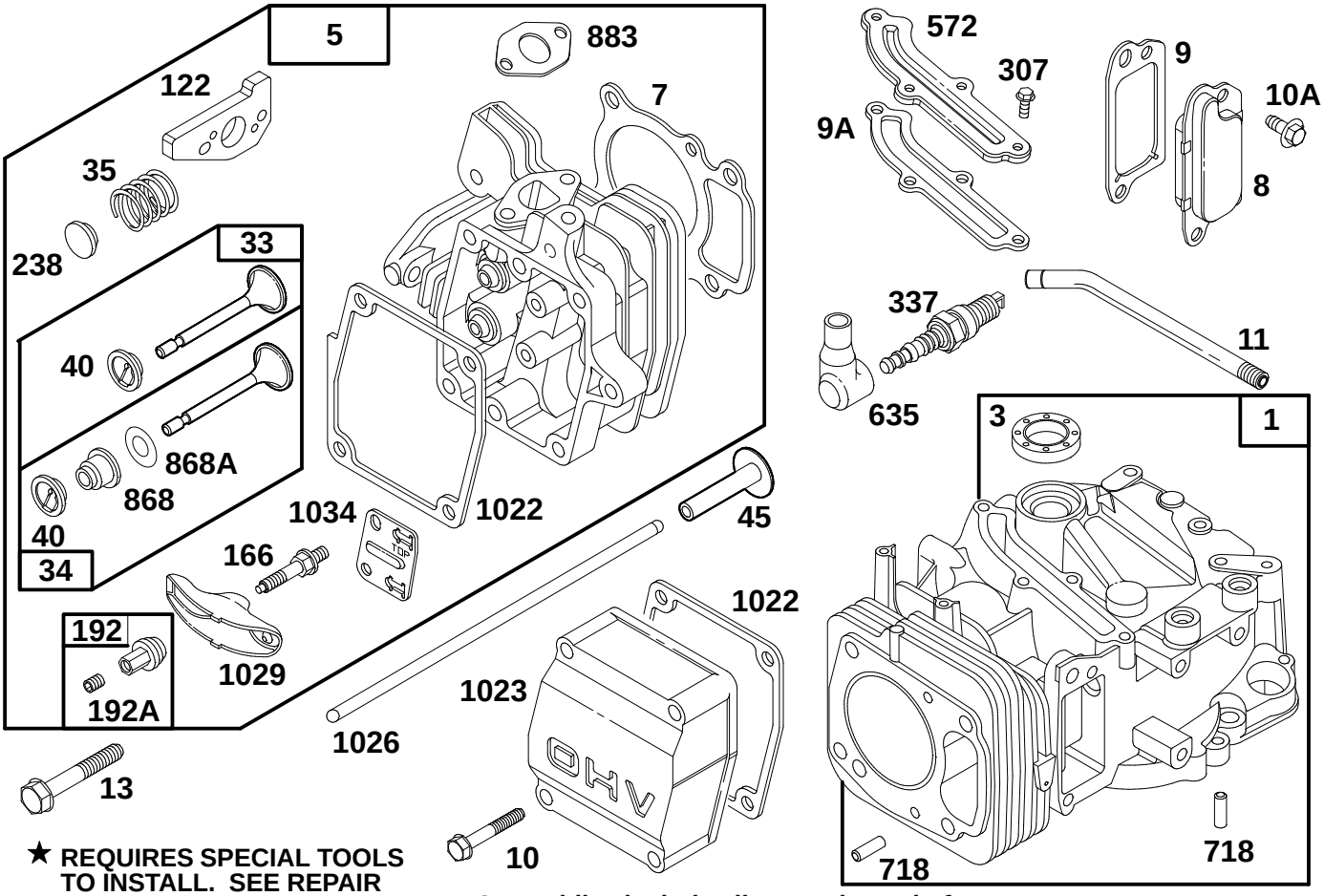


★ REQUIRES SPECIAL TOOLS TO INSTALL. SEE REPAIR INSTRUCTION MANUAL.

**Assemblies include all parts shown in frames.**

# ENGINE GTS 150 (Model No. 20476 Only)

| Ref. No. | Part No. | Description | No. Used |
|---|---|---|---|
| 1 | 77−7590 | Cylinder Assy | 1 |
| †3 | 77−9060 | Seal − Oil | 1 |
| 5 | 77−7730 | Head − Cylinder | 1 |
| †7 | 77−7740 | Gasket − Cylinder Head | 1 |
| 8 | 77−9300 | Breather Assy | 1 |
| †9 | 77−9250 | Gasket − Breather | 1 |
| †9A | 77−7410 | Gasket − Breather | 1 |
| 10 | 77−7360 | Screw − Hex Head (Valve Cover) | 1 |
| 10A | 77−9200 | Screw − Hex Head | 1 |
| 11 | 77−9410 | Tube − Breather | 1 |
| 13 | 77−7630 | Screw − Cylinder Head | 1 |
| 33 | 77−7860 | Valve − Exhaust | 1 |
| 34 | 77−7880 | Valve − Intake | 1 |
| 35 | 77−7810 | Spring − Valve | 1 |
| 40 | 77−7870 | Retainer − Spring | 1 |
| 45 | 77−7610 | Tappet − Valve | 1 |
| ‡122 | 77−7820 | Adapter Assy | 1 |
| 166 | 77−7780 | Stud − Rocker Arm | 1 |

| Ref. No. | Part No. | Description | No. Used |
|---|---|---|---|
| 192 | 77−7910 | Ball & Screw − Rocker Arm | 1 |
| 192A | 77−9310 | Screw − Set | 1 |
| 238 | 77−7800 | Cap − Valve | 1 |
| 307 | 77−7420 | Screw − Cover Mtg (Breather Cover) | 1 |
| 337 | 77−7330 | Plug − Spark | 1 |
| 572 | 77−7400 | Cover − Breather | 1 |
| 635 | 77−7340 | Elbow − Spark Plug | 1 |
| 718 | 77−7600 | Pin − Dowel | 1 |
| †868 | 77−7890 | Seal Assy − Valve | 1 |
| †868A | 77−7900 | Gasket − Valve | 1 |
| †883 | 77−7760 | Gasket − Exhaust | 1 |
| †1022 | 77−7320 | Gasket − Rocker Cover | 1 |
| 1023 | 77−9320 | Cover − Valve | 1 |
| 1026 | 77−7620 | Rod − Push | 1 |
| 1029 | 77−7790 | Arm − Rocker | 1 |
| 1034 | 77−7770 | Guide − Push Rod | 1 |

† Included in Gasket Set − Part No. 77−8900
‡Included in Carburetor Overhaul Kit − Part No. 77−9580

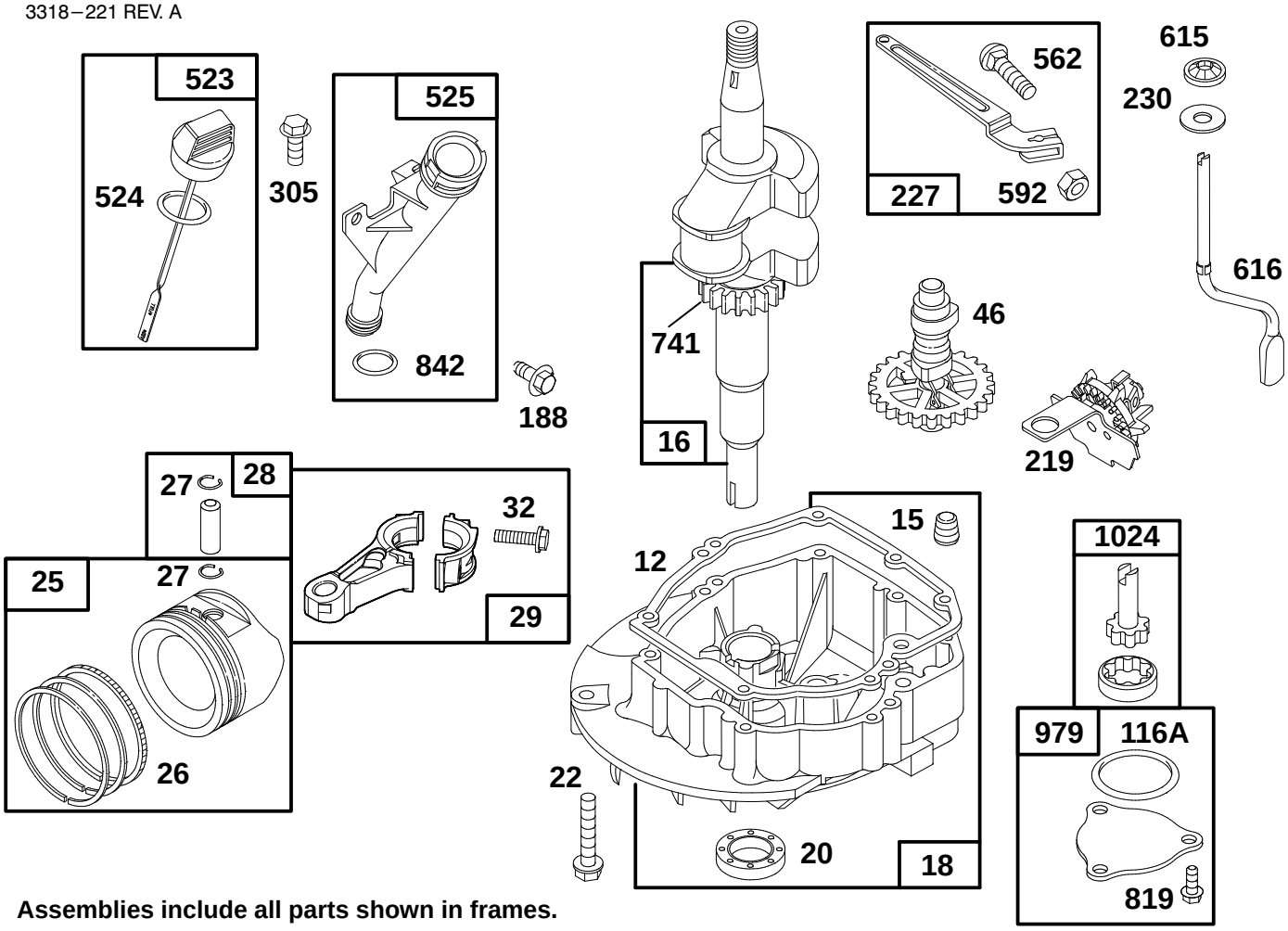


**Assemblies include all parts shown in frames.**

# ENGINE GTS 150 (Model No. 20476 Only)

| Ref. No. | Part No. | Description | No. Used |
|---|---|---|---|
| †12 | 77−7550 | Gasket − Engine Base | 1 |
| 15 | 77−9240 | Plug − Pipe | 1 |
| 16 | 77−7510 | Crankshaft | |
| | | Note: Order Part No. 77−7540 For Timing Gear Key | 1 |
| 18 | 77−7560 | Base − Engine | 1 |
| †20 | 77−7570 | Seal − Oil | 1 |
| 22 | 77−9070 | Screw − Engine Base | 1 |
| 25 | 77−7690 | Piston Assy (Std.) | 1 |
| 26 | 77−7700 | Ring Set (Std.) | 1 |
| 27 | 77−7710 | Lock − Piston Pin | 1 |
| 28 | 77−9340 | Pin Assembly − Piston | 1 |
| 29 | 77−7670 | Rod − Connecting | 1 |
| 32 | 77−7680 | Screw − Connecting Rod | 1 |
| 46 | 77−7490 | Gear − Cam | 1 |
| †116A | 77−7660 | O−Ring | 1 |
| 188 | 77−9360 | Screw − Hex Head | 1 |

| Ref. No. | Part No. | Description | No. Used |
|---|---|---|---|
| 219 | 77−7500 | Gear − Governor | 1 |
| 227 | 77−7370 | Lever Assembly − Governor | 1 |
| 230 | 77−7470 | Washer | 1 |
| 305 | 77−8310 | Screw − Hex Head | 1 |
| 523 | 77−7260 | Dipstick − Oil | 1 |
| †524 | 77−7270 | Seal − O−Ring | 1 |
| 525 | 77−7280 | Tube − Oil Fill | 1 |
| 562 | 77−7380 | Bolt − Governor Lever | 1 |
| 592 | 77−7390 | Nut − Hex | 1 |
| 615 | 77−7480 | Push Nut | 1 |
| 616 | 77−7460 | Crank − Governor | 1 |
| 741 | 77−7530 | Gear − Timing | 1 |
| †842 | 77−7300 | Seal − O−Ring | 1 |
| 819 | 77−7450 | Screw − Cap | 1 |
| 979 | 77−7650 | Cover − Oil Pump | 1 |
| 1024 | 77−7640 | Pump − Oil | 1 |

† Included in Gasket Set − Part No. 77−8900

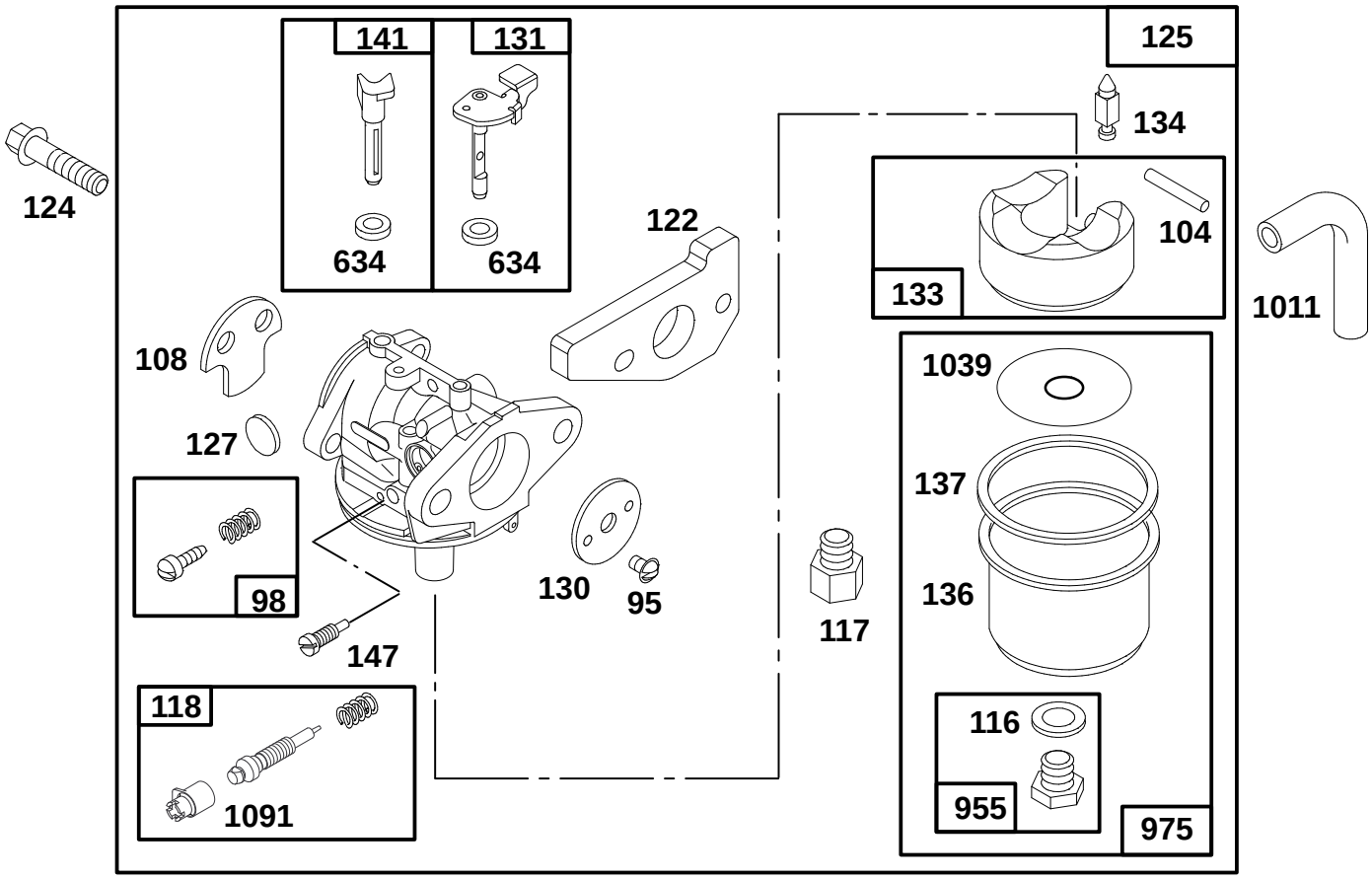


**Assemblies include all parts shown in frames.**

# ENGINE GTS 150 (Model No. 20476 Only)

| Ref. No. | Part No. | Description | No. Used |
|---|---|---|---|
| 95 | 77−8090 | Screw − Valve Mtg | 1 |
| 98 | 77−8240 | Screw − Idle Adj. | 1 |
| ‡104 | 77−8180 | Pin − Float Hinge | 1 |
| 108 | 77−9600 | Valve − Choke | 1 |
| ‡*116 | 77−8210 | Gasket − Sealing | 1 |
| ‡117 | 77−9610 | Jet − Main | 1 |
| | | Note: For High Altitude Jet, Order Part No. 94−1650 | 1 |
| ‡118 | 77−9620 | Valve & Spring − Needle | 1 |
| ‡122 | 77−7820 | Adapter Assy | 1 |
| 124 | 77−7970 | Screw − Hex Head (Carb. Mtg.) | 1 |
| 125 | 77−9630 | Carburetor Assy | 1 |
| ‡127 | 94−1651 | Plug − Welch | 1 |

| Ref. No. | Part No. | Description | No. Used |
|---|---|---|---|
| 130 | 77−8080 | Valve − Throttle | 1 |
| 131 | 77−8160 | Shaft − Throttle | 1 |
| 133 | 77−8170 | Float − Carburetor | 1 |
| ‡134 | 77−8110 | Valve − Inlet (Includes Seat) | 1 |
| 136 | 77−7240 | Bowl − Fuel | 1 |
| ‡*137 | 77−8200 | Gasket − Float Bowl | 1 |
| 141 | 77−8130 | Shaft − Choke | 1 |
| 147 | 77−9640 | Jet − Pilot | 1 |
| *634 | 77−8150 | Washer − Seal | 1 |
| 955 | 77−8220 | Screw − Hex Head | 1 |
| 975 | 77−8190 | Bowl Assy − Carburetor | 1 |
| 1011 | 77−8040 | Tube − Vent | 1 |
| ‡1039 | 77−7250 | Limiter − Float | 1 |
| ‡1091 | 77−9650 | Cap − Limiter | 1 |

‡ Included in Gasket Set − Part No. 77−9580
* Included in Gasket Set − Part No. 77−8930

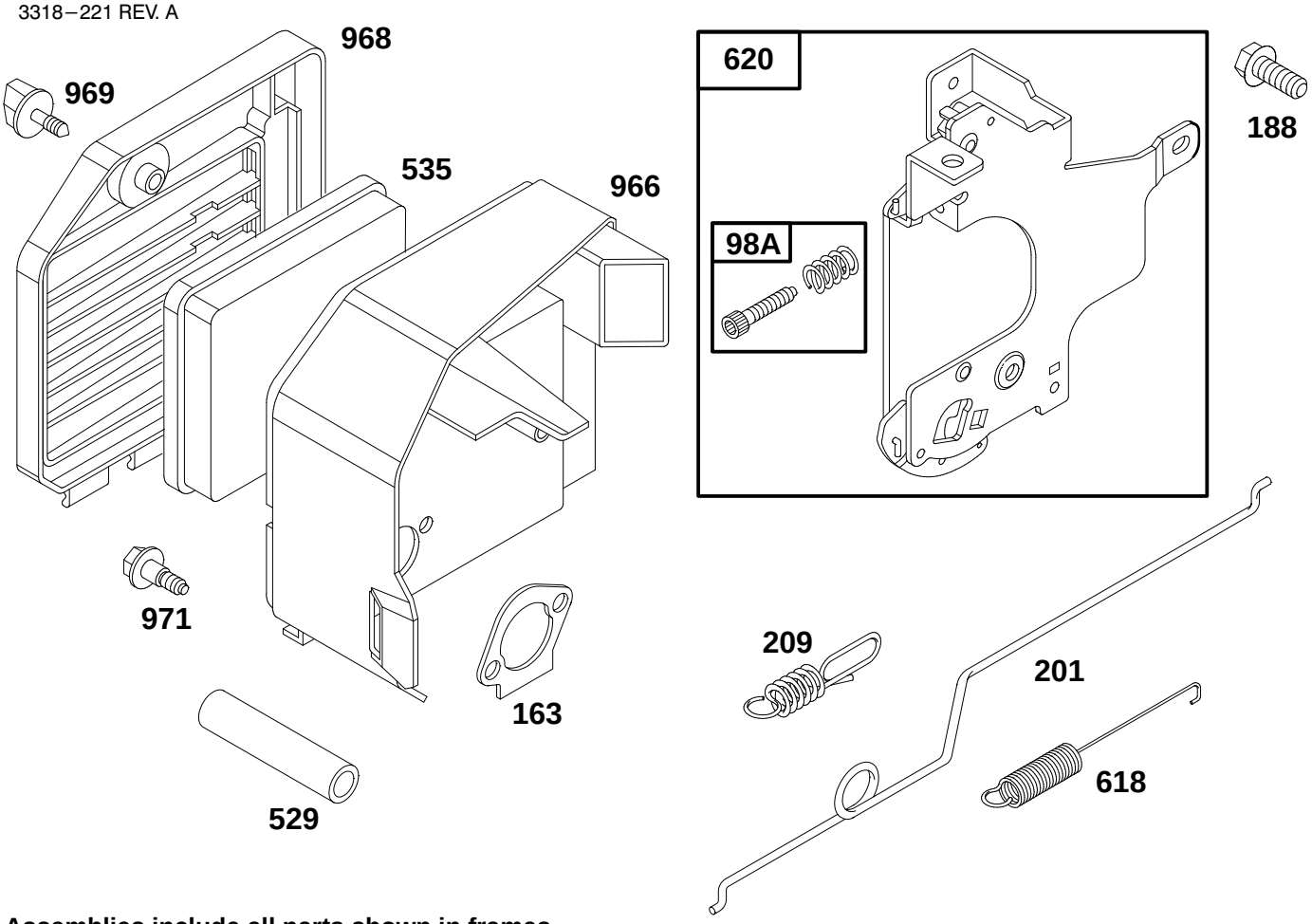


**Assemblies include all parts shown in frames.**

# ENGINE GTS 150 (Model No. 20476 Only)

| Ref. No. | Part No. | Description | No. Used |
|---|---|---|---|
| 98A | 77−8020 | Screw Assy − Speed Adj. | 1 |
| †163 | 77−7960 | Gasket − Air Cleaner | 1 |
| 188 | 77−9360 | Screw − Hex Head | 1 |
| 201 | 77−7980 | Link − Governor | 1 |
| 209 | 77−7990 | Spring − Governor | 1 |
| 529 | 77−9470 | Tube − Breather | 1 |
| 535 | 77−7950 | Element − Filter | 1 |

| Ref. No. | Part No. | Description | No. Used |
|---|---|---|---|
| 618 | 77−8140 | Spring − Choke | 1 |
| 620 | 77−8000 | Bracket − Carburetor | 1 |
| 966 | 77−7940 | Base − Air Cleaner | 1 |
| 968 | 77−7040 | Cover − Air Cleaner | 1 |
| 969 | 77−7920 | Screw − Air Cleaner | 1 |
| 971 | 77−7930 | Screw − Air Cleaner | 1 |

† Included in Gasket Set − Part No. 77−8900

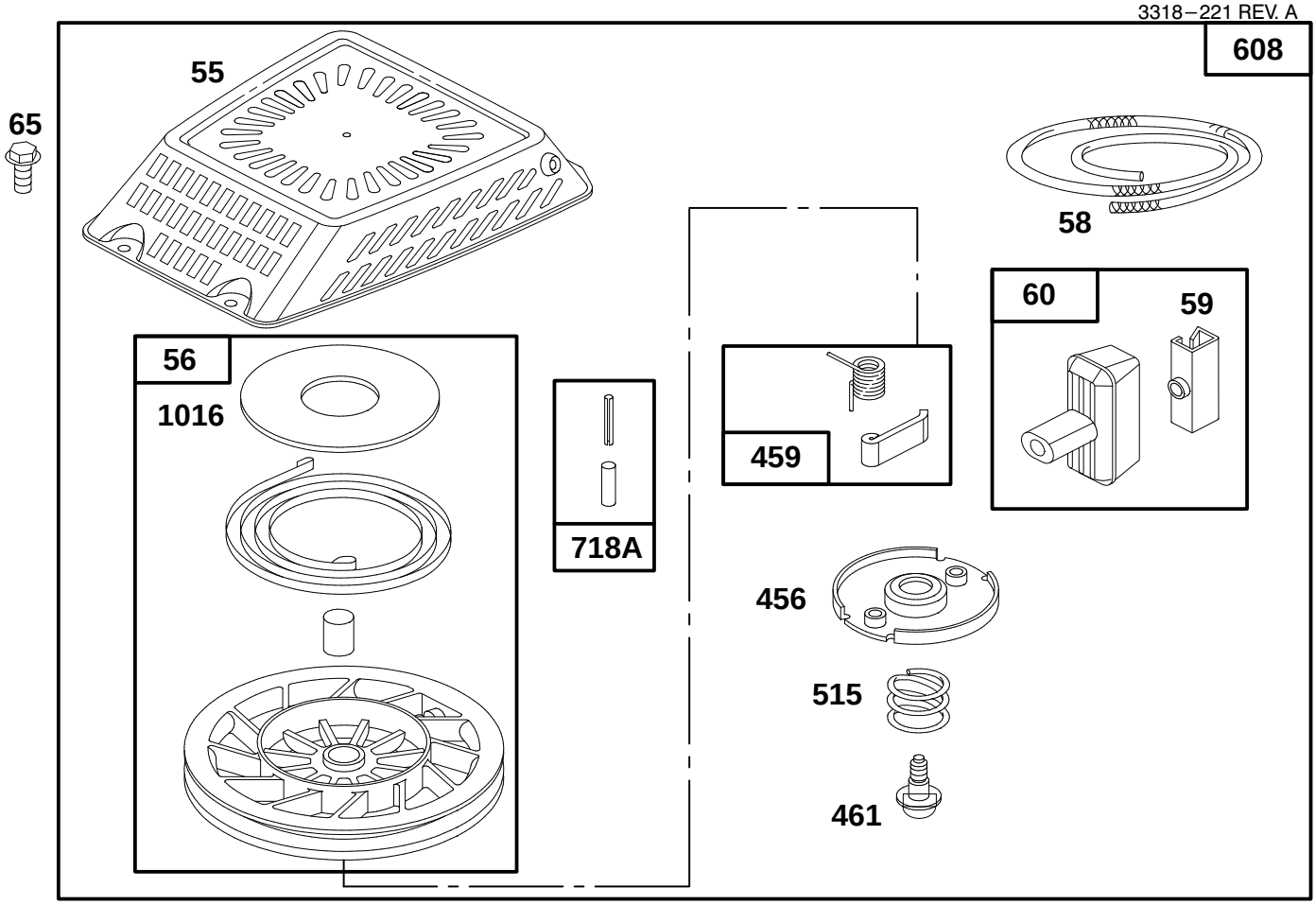


**Assemblies include all parts shown in frames.**

# ENGINE GTS 150 (Model No. 20476 Only)

| Ref. No. | Part No. | Description | No. Used |
|---|---|---|---|
| 55 | 77−8460 | Housing − Rewind Starter | 1 |
| 56 | 77−9270 | Pulley − Rewind Starter | 1 |
| 58 | 77−8480 | Rope − Starter (Cut To Suit) | 1 |
| 59 | 77−7210 | Insert − Rewind Handle | 1 |
| 60 | 77−8510 | Handle − Rewind Starter | 1 |
| 65 | 77−8300 | Screw − Hex Head | 1 |
| 456 | 77−8470 | Retainer − Rewind Starter | 1 |
| 459 | 77−8530 | Pawl − Starter | 1 |
| 461 | 77−8490 | Screw − Rewind Starter | 1 |
| 515 | 77−8500 | Spring − Torsion | 1 |
| 608 | 77−8450 | Starter Assy − Rewind | 1 |

| Ref. No. | Part No. | Description | No. Used |
|---|---|---|---|
| 718A | 77−8550 | Pin − Spring | 1 |
| 1016 | 77−8570 | Cover − Spring | 1 |
| | | Model No. 20476−6900001 & Up may have been assembled with Starter Ass'y No. 77−8450 or 94−1678. Part identification will be required for service part replacement. | |

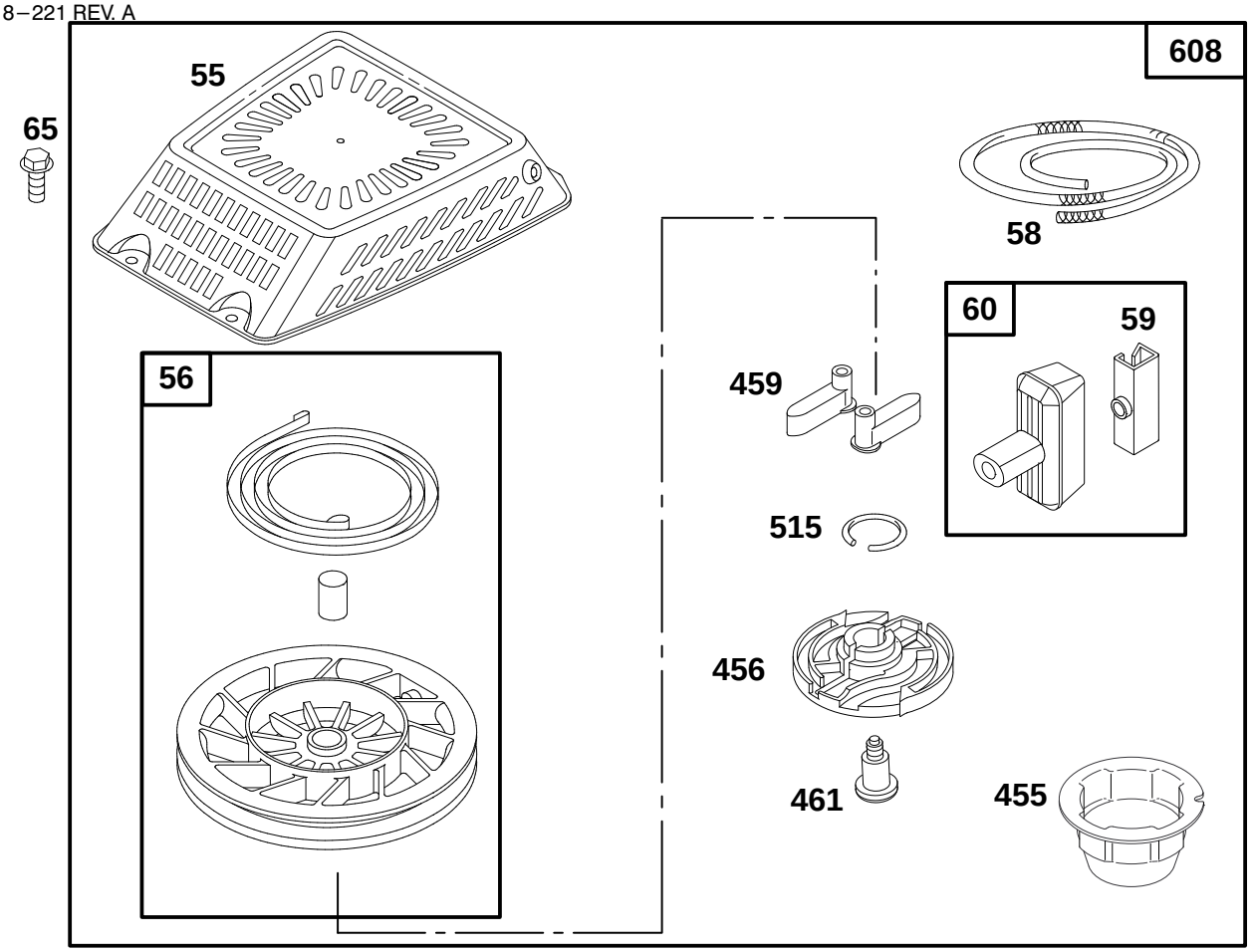


**Assemblies include all parts shown in frames.**

# ENGINE GTS 150 (Model No. 20476 Only)

| Ref. No. | Part No. | Description | No. Used |
|---|---|---|---|
| 55 | 94–1656 | Housing–Rewind Starter | 1 |
| 56 | 94–1657 | Pulley–Rewind Starter | 1 |
| 58 | 94–1668 | Rope–Starter (Cut To Suit) | 1 |
| 59 | 77–7210 | Insert–Rewind Handle | 1 |
| 60 | 77–8520 | Handle–Rewind Starter | 1 |
| 65 | 77–8300 | Screw–Hex Head | 1 |
| 455 | 94–1653 | Cup – Starter | 1 |
| 456 | 94–1659 | Retainer–Rewind Starter | 1 |
| 459 | 94–1654 | Pawl–Starter | 1 |
| 461 | 94–1660 | Screw–Rewind Starter | 1 |
| 515 | 94–1655 | Spring–Torsion | 1 |

| Ref. No. | Part No. | Description | No. Used |
|---|---|---|---|
| 608 | 94–1678 | Starter Assy–Rewind<br><br>Model No. 20476–6900001 & Up may have been assembled with Starter Ass'y No. 77–8450 or 94–1678. Part identification will be required for service part replacement. | 1 |

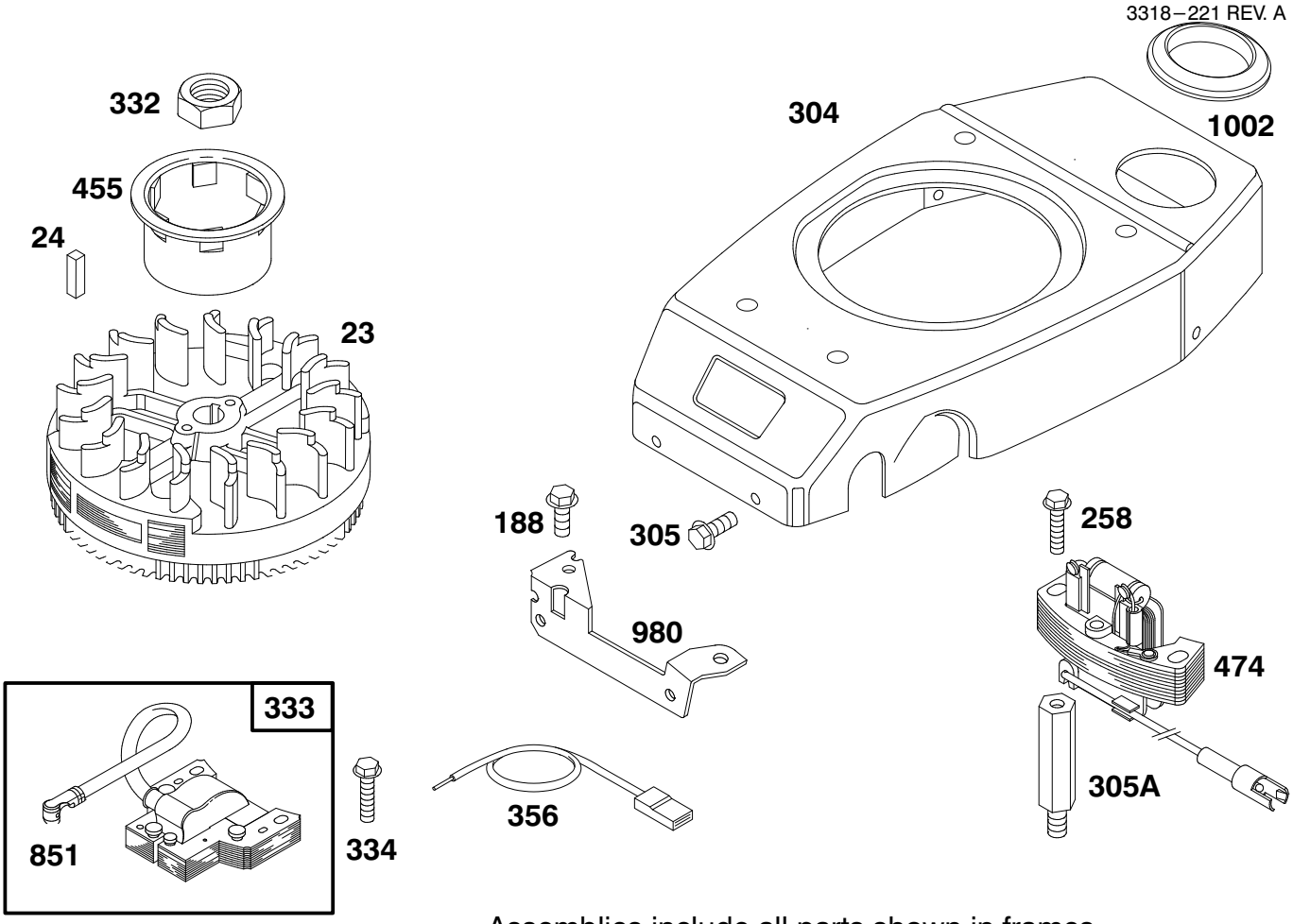


Assemblies include all parts shown in frames.

# ENGINE GTS 150 (Model No. 20476 Only)

| Ref. No. | Part No. | Description | No. Used |
|---|---|---|---|
| 23 | 77−8320 | Flywheel − Magneto | 1 |
| 24 | 77−8340 | Key − Flywheel | 1 |
| 37 | 77−7190 | Guard − Flywheel | 1 |
| 188 | 77−9360 | Screw − Hex Head | 1 |
| 258 | 77−8870 | Screw − Hex Head | 1 |
| 304 | 77−8280 | Housing − Blower | 1 |
| 305 | 77−8310 | Screw − Hex Head | 1 |
| 305A | 77−8390 | Stud − Stator Mounting | 1 |
| 332 | 77−8360 | Nut − Flywheel | 1 |

| Ref. No. | Part No. | Description | No. Used |
|---|---|---|---|
| 333 | 77−8420 | Armature − Magneto | 1 |
| 334 | 77−9420 | Screw − Armature Mtg. | 1 |
| 356 | 77−8400 | Wire − Ground | 1 |
| 455 | 77−8350 | Cup − Starter | 1 |
| 474 | 77−8370 | Stator Assembly | 1 |
| 851 | 77−8430 | Terminal − Spark Plug | 1 |
| 980 | 77−7140 | Bracket − Blower Housing | 1 |
| 1002 | 77−7180 | Grommet | 1 |

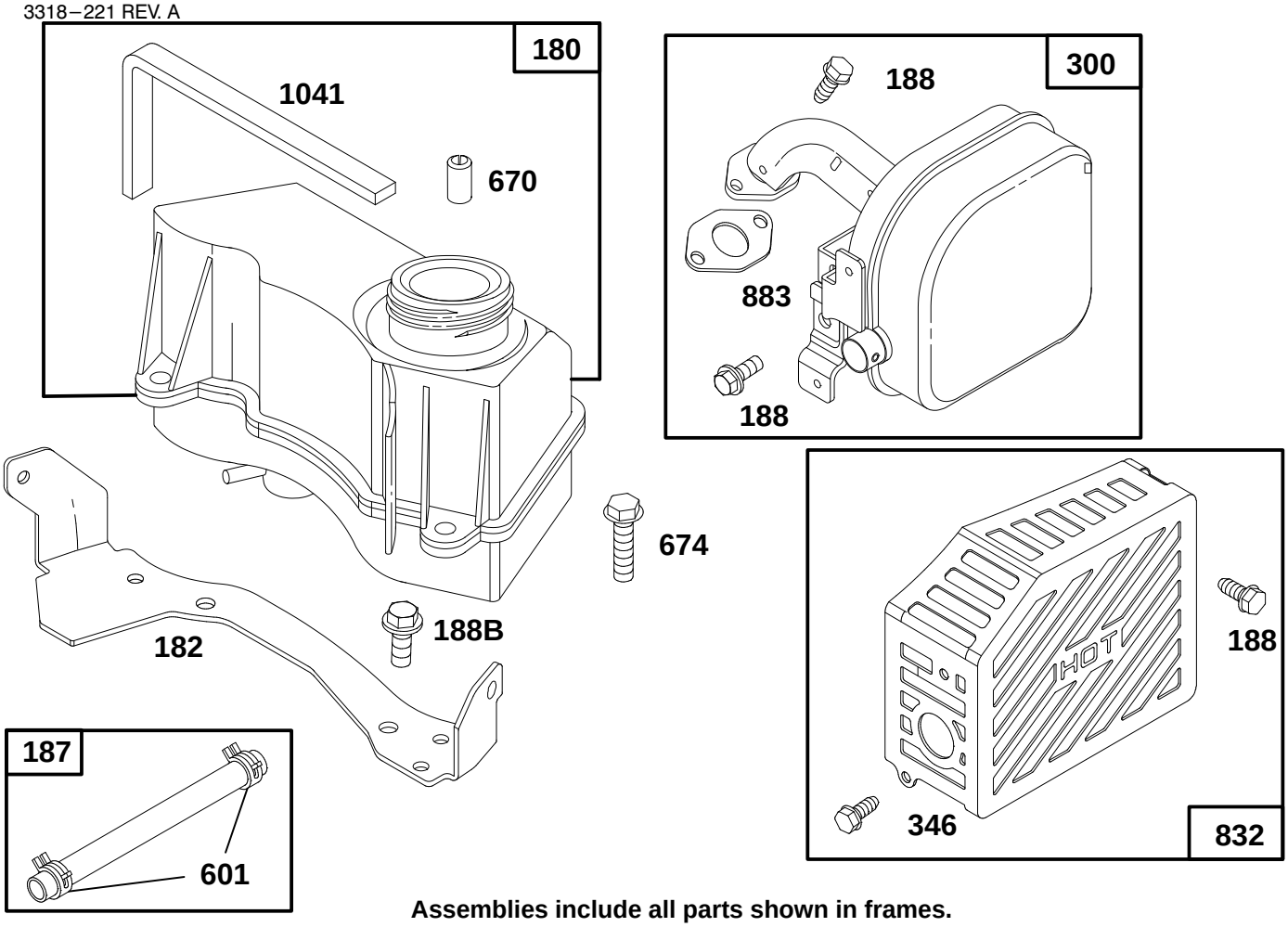


**Assemblies include all parts shown in frames.**

# ENGINE GTS 150 (Model No. 20476 Only)

| Ref. No. | Part No. | Description | No. Used |
|---|---|---|---|
| 180 | 77−8580 | Tank Assy − Fuel | 1 |
| 182 | 77−7170 | Bracket − Fuel Tank | 1 |
| 187 | 78−4100 | Hose − Fuel (Cut To Suit) | 1 |
| 188 | 77−9360 | Screw − Cap | 1 |
| 300 | 77−8640 | Muffler − Exhaust | 1 |
| 346 | 77−9430 | Screw − Hex Head | 1 |

| Ref. No. | Part No. | Description | No. Used |
|---|---|---|---|
| 601 | 78−4690 | Clamp − Hose | 1 |
| 670 | 77−9030 | Spacer − Fuel Tank | 1 |
| 674 | 77−8600 | Screw − Tank Mtg. | 1 |
| †832 | 77−9290 | Guard − Muffler | 1 |
| †1041 | 77−8590 | Seal − Foam | 1 |

† Included in Gasket Set − Part No. 77−8900

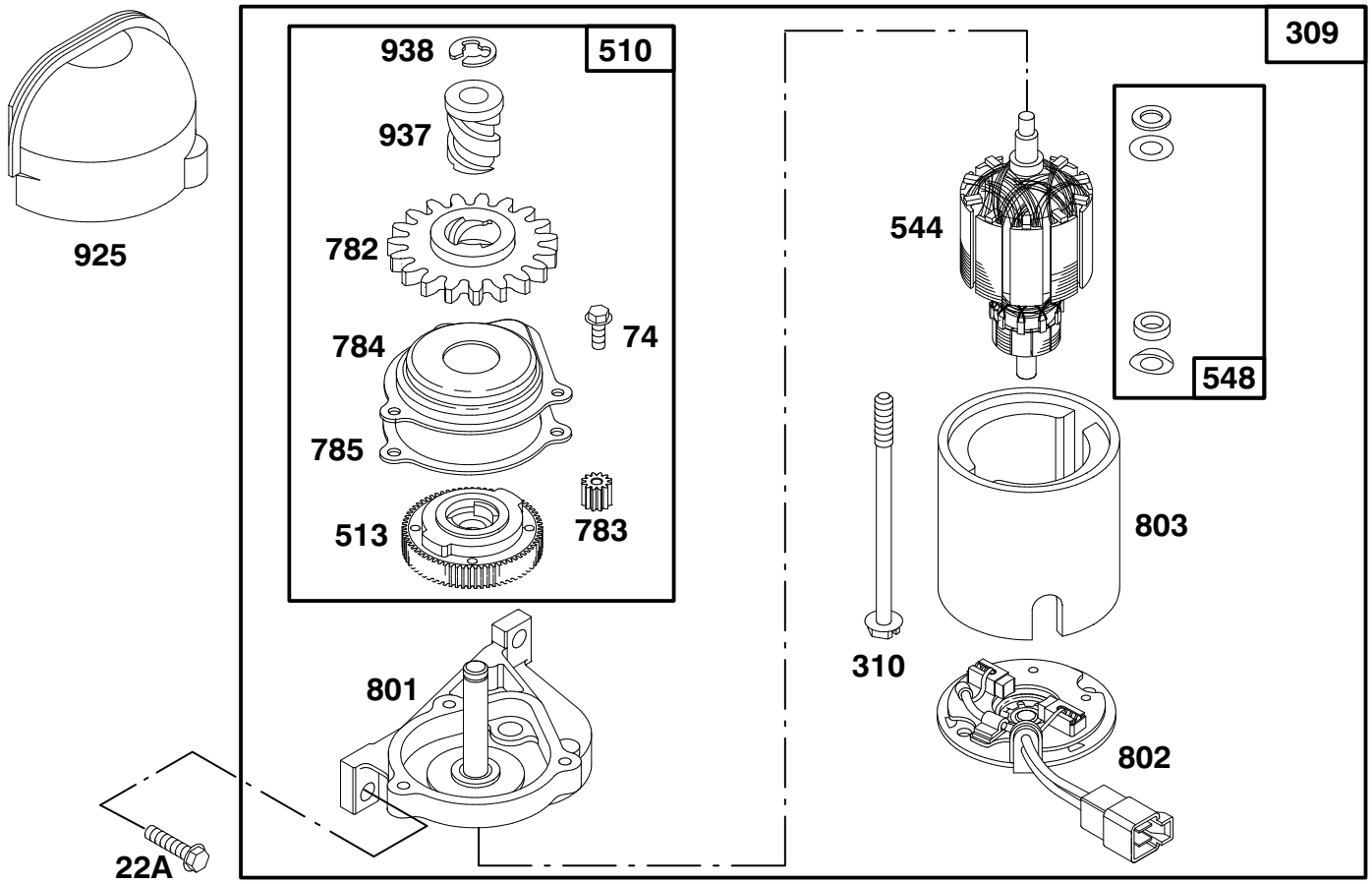


Assemblies include all parts shown in frames.

# ENGINE GTS 150 (Model No. 20476 Only)

| Ref. No. | Part No. | Description | No. Used |
|---|---|---|---|
| 22A | 77−8420 | Screw − Hex Washer Hd. | 1 |
| 74 | 77−8800 | Screw − Hex Washer Hd. | 1 |
| 309 | 77−8670 | Motor − Starter | 1 |
| 310 | 77−8710 | Screw − Hex Washer Hd. | 1 |
| 510 | 77−8910 | Drive Kit | 1 |
| 513 | 77−8770 | Clutch Assembly | 1 |
| 544 | 77−8670 | Armature Assembly | 1 |
| 548 | 77−8470 | Washer Set | 1 |
| 782 | 77−8810 | Pinion − Starter | 1 |

| Ref. No. | Part No. | Description | No. Used |
|---|---|---|---|
| 783 | 77−8760 | Gear − Pinion | 1 |
| 784 | 77−8780 | Cover − Gear | 1 |
| 785 | 77−8790 | Gasket − Cover | 1 |
| 801 | 77−8680 | Bracket Assembly | 1 |
| 802 | 77−8690 | Head Assembly | 1 |
| 803 | 77−8700 | Shell & Magnet Assembly | 1 |
| 925 | 77−7200 | Cover − Starter | 1 |
| 937 | 77−8820 | Spline − Starter | 1 |
| 938 | 77−8830 | Retainer − Lock | 1 |

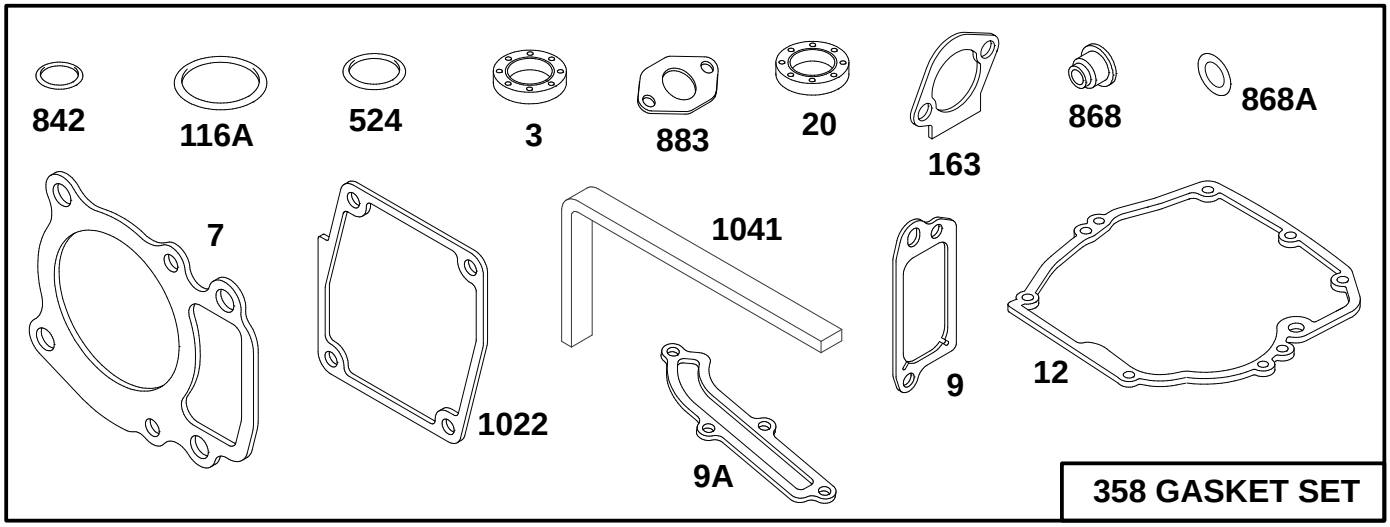


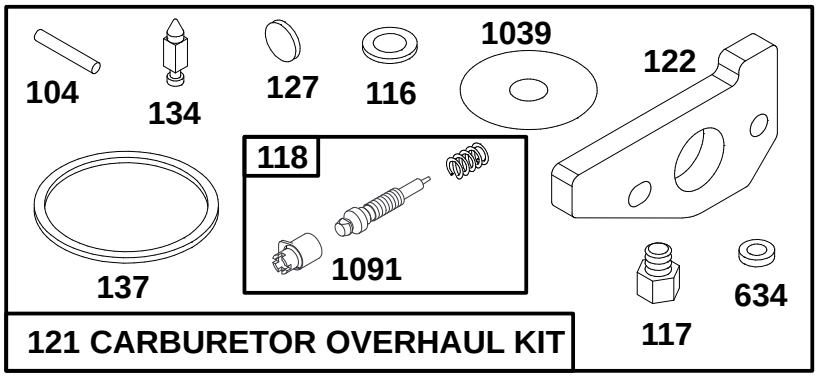


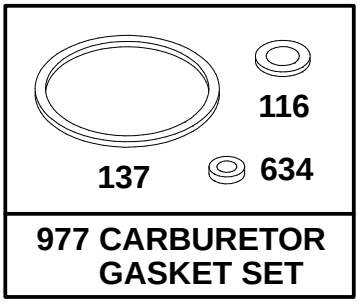


**Assemblies include all parts shown in frames.**

# ENGINE GTS 150 (Model No. 20476 Only)

| Ref. No. | Part No. | Description | No. Used |
|---|---|---|---|
| †3 | 77−9060 | Seal − Oil (Upper) | 1 |
| †7 | 77−7740 | Gasket − Cylinder Head | 1 |
| †9 | 77−9250 | Gasket − Breather | 1 |
| †9A | 77−7410 | Gasket − Breather Cover | 1 |
| †12 | 77−7550 | Gasket − Engine Base | 1 |
| †20 | 77−7570 | Seal − Oil (Lower) | 1 |
| ‡104 | 77−8180 | Pin − Float Hinge | 1 |
| ‡*116 | 77−8210 | Washer − Bowl | 1 |
| †116A | 77−7660 | Seal − O−Ring | 1 |
| ‡117 | 77−9610 | Jet − Main | 1 |
| ‡118 | 77−9620 | Valve & Spring − Needle | 1 |
| 121 | 77−9580 | Overhaul Kit − Carburetor | 1 |
| ‡122 | 77−7820 | Adapter Assy | 1 |
| ‡127 | 94−1651 | Plug − Welch | 1 |
| ‡134 | 77−8110 | Valve − Inlet (Includes Seat) | 1 |

| Ref. No. | Part No. | Description | No. Used |
|---|---|---|---|
| ‡*137 | 77−8200 | Gasket − Float Bowl | 1 |
| †163 | 77−7960 | Gasket − Air Cleaner | 1 |
| 358 | 77−8900 | Gasket Set | 1 |
| †524 | 77−7270 | Seal − O−Ring (Oil Fill Cap) | 1 |
| *634 | 77−8150 | Washer − Seal | 1 |
| †842 | 77−7300 | Seal − O−Ring (Oil Fill Tube) | 1 |
| †868 | 77−7890 | Seal Assy − Valve | 1 |
| †868A | 77−7900 | Seal − Valve | 1 |
| †883 | 77−7760 | Gasket − Exhaust | 1 |
| 977 | 77−8930 | Carburetor Gasket Set | 1 |
| †1022 | 77−7320 | Gasket − Rocker Cover | 1 |
| ‡1039 | 77−7250 | Limiter − Float | 1 |
| †1041 | 77−8590 | Seal − Foam (Fuel Tank) | 1 |
| ‡1091 | 77−9650 | Cap − Limiter | 1 |

‡ Incl. in Carburetor Overhaul Kit − Part No. 77−9580
*Incl. in Carburetor Gasket Set − Part No. 77−8930

† Included in Gasket Set − Part No. 77−8900

# TORO PART NUMBER INDEX


| Part No. | Description | Pg. No. | Ref. No. | Qty. |
|---|---|---|---|---|
| 3−3287 | Spacer | 7 | 5 | 2 |
| 3−3287 | Spacer | 8 | 5 | 2 |
| 3−5792 | Washer | 2 | 36 | 1 |
| 8−2759 | Bag − Grass | 9 | 4 | 1 |
| 14−9989 | Wheel & Tire Assembly | 1 | 25 | 2 |
| 16−0029 | Wheel & Tire Assembly | 5 | 20 | 2 |
| 16−9569 | Panel − Control | 7 | 12 | 1 |
| 16−9579 | Panel − Control | 8 | 12 | 1 |
| 16−9589 | Housing − 21 | 1 | 1 | 1 |
| 19−4050 | Knob | 7 | 11 | 2 |
| 19−4050 | Knob | 8 | 11 | 2 |
| 25−7740 | Knob − Arm | 1 | 21 | 4 |
| 27−6232 | Bolt − Wheel | 5 | 23 | 4 |
| 27−6232 | Bolt − Wheel | 1 | 26 | 2 |
| 27−6250 | Bushing − Wheel | 5 | 8 | 4 |
| 27−7210 | Screw − Shoulder | 7 | 4 | 2 |
| 27−7210 | Screw − Shoulder | 8 | 4 | 2 |
| 27−7211 | Screw − Shoulder | 7 | 7 | 2 |
| 27−7211 | Screw − Shoulder | 8 | 7 | 2 |
| 29−9570 | Bushing − Yoke | 6 | 37 | 1 |
| 33−3208 | Rod − Shield | 1 | 16 | 1 |
| 33−4820 | Hinge − Bag Door | 9 | 3 | 1 |
| 36−4780 | Washer − Thrust | 6 | 42 | 1 |
| 36−4791 | Washer − Thrust | 6 | 46 | 2 |
| 36−6910 | Spring | 9 | 5 | 2 |
| 37−1393 | Door − Grass Bag | 9 | 8 | 1 |
| 37−7260 | Screw − Tapping | 2 | 35 | 1 |
| 37−7260 | Screw − Tapping | 2 | 35 | 2 |
| 37−7262 | Screw − Special | 2 | 38 | 1 |
| 38−7820 | Bearing − Ball | 6 | 58 | 1 |
| 40−1940 | Washer | 1 | 19 | 4 |
| 42−0884 | V−Belt − BBC | 3 | 22 | 1 |
| 42−3190 | Bolt − Blade | 4 | 4 | 2 |
| 42−3520 | Cap − End | 5 | 5 | 2 |
| 42−4020 | Frame − Bag | 9 | 6 | 1 |
| 42−4030 | Frame − Upper Bag | 9 | 2 | 1 |
| 42−6890 | Hub Assembly − BBC | 4 | 6 | 1 |
| 43−1362 | Handle − Lower | 7 | 1 | 1 |
| 43−1362 | Handle − Lower | 8 | 1 | 1 |
| 43−8480 | Decal − Danger | 1 | 3 | 1 |
| 44−0580 | Shield − Trailing | 1 | 15 | 1 |
| 46−5460 | Housing − Control LH | 7 | 19 | 1 |
| 46−5460 | Housing − Control LH | 8 | 19 | 1 |
| 46−5480 | Cable − Traction | 7 | 42 | 1 |
| 46−5480 | Cable − Traction | 8 | 42 | 1 |
| 46−5510 | Spring − Torsion | 7 | 25 | 1 |
| 46−5510 | Spring − Torsion | 8 | 25 | 1 |
| 46−5520 | Lever − Traction | 7 | 21 | 1 |
| 46−5520 | Lever − Traction | 8 | 21 | 1 |
| 46−5530 | Hook − Control | 7 | 24 | 1 |
| 46−5530 | Hook − Control | 8 | 24 | 1 |
| 46−5540 | Lever − Cable | 7 | 23 | 1 |
| 46−5540 | Lever − Cable | 8 | 23 | 1 |
| 46−5550 | Bushing − PM | 7 | 26 | 1 |
| 46−5550 | Bushing − PM | 8 | 26 | 1 |
| 46−5590 | Spacer | 7 | 20 | 1 |
| 46−5590 | Spacer | 8 | 20 | 1 |
| 46−5630 | Hub − Pulley Idler | 3 | 23 | 1 |
| 46−5650 | Pulley − Idler | 3 | 21 | 1 |
| 46−5670 | Spring − Torsion Lower | 3 | 19 | 1 |
| 46−5692 | Shield − BBC | 4 | 8 | 1 |
| 46−5780 | Switch − Starter | 8 | 46 | 1 |
| 46−6440 | Cover − Cables Control | 7 | 43 | 1 |
| 46−6440 | Cover − Cables Control | 8 | 43 | 1 |
| 46−6810 | Screw − Hex Washer Hd. | 1 | 14 | 1 |
| 46−6811 | Screw − Hex Washer Hd. | 1 | 13 | 3 |
| 46−6811 | Screw − Hex Washer Hd. | 4 | 15 | 3 |
| 46−7030 | Retainer − Cable | 1 | 29 | 1 |
| 46−7040 | Screw − Hex Washer Hd. | 7 | 33 | 3 |
| 46−7040 | Screw − Hex Washer Hd. | 8 | 33 | 3 |
| 46−7370 | Decal − Step Pad | 1 | 5 | 1 |
| 46−8090 | Screw − Tapping | 2 | 49 | 2 |
| 48−2060 | Needle Bearing | 6 | 21 | 2 |
| 49−1630 | Spacer − Support | 7 | 36 | 1 |
| 49−1630 | Spacer − Support | 8 | 36 | 1 |
| 49−2040 | Screw − Hex Hd. | 2 | 33 | 2 |
| 49−2040 | Screw − Self Tapping | 6 | 8 | 6 |
| 49−2810 | Link − Control | 3 | 11 | 1 |
| 49−2820 | Lever | 3 | 14 | 1 |
| 49−7950 | Sleeve − Bell Crank | 3 | 13 | 1 |
| 49−7960 | Crank − Bell | 3 | 12 | 1 |
| 49−7970 | Spring − Torsion Upper | 3 | 16 | 1 |
| 52−3480 | Damper − Vibration | 4 | 7 | 2 |
| 52−7410 | Spring − Leaf | 7 | 31 | 1 |
| 52−7410 | Spring − Leaf | 8 | 31 | 1 |
| 52−7430 | Bar − Control | 7 | 18 | 1 |
| 52−7430 | Bar − Control | 8 | 18 | 1 |
| 54−9190 | Nut − Lock | 4 | 14 | 2 |
| 55−3570 | Gas Cap Assembly | 3 | 2 | 1 |
| 55−3760 | Gear − Pinion 15 Tooth | 6 | 47 | 1 |
| 55−3770 | Gear − 49 Tooth 1st Gear | 6 | 56 | 1 |
| 55−3780 | Gear − Pinion 20 Tooth | 6 | 48 | 1 |
| 55−3790 | Gear − 44 Tooth 2nd Gear | 6 | 55 | 1 |
| 55−3800 | Gear − Pinion | 6 | 49 | 1 |
| 55−3810 | Gear − 39 Tooth 3rd Gear | 6 | 54 | 1 |
| 55−7520 | Battery Assembly | 8 | 50 | 1 |
| 55−8180 | Retainer − Battery | 8 | 51 | 1 |
| 56−6160 | Flywheel − BBC | 4 | 3 | 1 |
| 56−6170 | Drum − Brake | 4 | 5 | 1 |
| 57−6290 | Pin − Insert | 7 | 32 | 1 |
| 57−6290 | Pin − Insert | 8 | 32 | 1 |
| 60−8710 | Gear Case − Upper | 6 | 59 | 1 |
| 60−8730 | Cover − Gear Case | 6 | 44 | 1 |
| 60−8750 | Bushing − Int. Shaft | 6 | 45 | 2 |
| 60−8770 | Bushing − Output Shaft | 6 | 43 | 1 |
| 60−8790 | Sleeve − Gear | 6 | 53 | 1 |
| 60−8800 | Shaft − Intermediate | 6 | 50 | 1 |
| 60−8810 | Retainer − Shift Fork | 6 | 38 | 1 |
| 60−8821 | Lever − Shift | 5 | 2 | 1 |
| 60−8840 | Pulley − Half | 6 | 10 | 2 |
| 60−8850 | Bushing − Output Shaft | 6 | 51 | 1 |
| 60−8870 | Yoke − Shift | 6 | 36 | 1 |
| 60−8890 | Pinion − Bevel | 6 | 57 | 1 |
| 62−3720 | Clamp − Cable | 1 | 4 | 1 |
| 62−3900 | V−Belt | 5 | 1 | 1 |
| 62−4320 | Bracket − Guide Belt | 2 | 32 | 1 |
| 62−6660 | Spacer | 6 | 9 | 1 |
| 62−6673 | Gear Case Assembly | 1 | 31 | 1 |
| 62−6673 | Gear Case Assembly | 6 | * | 1 |
| 62−7560 | Pulley − Driver | 4 | 2 | 1 |
| 63−8360 | Key − Ignition | 8 | 49 | 1 |
| 63−8701−03 | Pivot Arm Assembly | 6 | 2 | 2 |
| 63−8721 | Spring Arm Ass'y | 5 | 6 | 2 |
| 65−2720 | Ring − Retaining | 5 | 11 | 4 |
| 65−4710 | Ring − Friction | 5 | 12 | 2 |
| 65−4720 | Spring − Compression | 5 | 17 | 2 |
| 65−4730 | Washer − Thrust | 5 | 9 | 2 |
| 65−4740 | Washer − Thrust Keyed | 5 | 10 | 4 |
| 65−4750 | Gear − Pinion | 5 | 16 | 2 |
| 65−4760 | Washer | 5 | 13 | 2 |


*Not Illustrated

# TORO PART NUMBER INDEX (Cont.)

| Part No. | Description | Pg. Ref. No. | No. | Qty. |
|---|---|---|---|---|
| 65−4770 | Shaft − Output | 6 | 18 | 1 |
| 65−5250 | Clip − Spring | 6 | 61 | 1 |
| 66−0160 | Housing − Control RH | 7 | 30 | 1 |
| 66−0160 | Housing − Control RH | 8 | 30 | 1 |
| 66−0170 | Washer − Nylon | 7 | 28 | 1 |
| 66−0170 | Washer − Nylon | 8 | 28 | 1 |
| 66−0180 | Rocker | 7 | 22 | 1 |
| 66−0180 | Rocker | 8 | 22 | 1 |
| 66−0190 | Spring − Detent | 7 | 29 | 1 |
| 66−0190 | Spring − Detent | 8 | 29 | 1 |
| 66−0541 | Spring Arm Ass'y − Front | 1 | 20 | 2 |
| 66−0560 | Screw − Shoulder | 1 | 24 | 2 |
| 66−0570 | Guide − Belt | 3 | 8 | 1 |
| 66−0580 | Arm − Pivot | 1 | 23 | 2 |
| 66−2150 | Decal − Bag Door | 9 | 7 | 1 |
| 66−6040 | Key − Rocking RH | 5 | * | 1 |
| 66−6050 | Key − Rocking LH | 5 | 14 | 1 |
| 68−9780 | Bearing | 3 | 18 | 2 |
| 70−1160 | Washer − PM | 3 | 17 | 1 |
| 70−9760 | Bushing | 6 | 19 | 2 |
| 71−8391 | Control − Control | 7 | 40 | 1 |
| 71−8391 | Control − Control | 8 | 40 | 1 |
| 71−9350 | Bracket − Spring | 2 | 41 | 1 |
| 74−1660 | Cover − Wheel | 5 | 18 | 2 |
| 74−1671 | Spacer − Cover Wheel | 5 | 19 | 2 |
| 76−0760 | Key − Shift | 6 | 40 | 2 |
| 76−0770 | Collar − Shift | 6 | 41 | 1 |
| 76−0780 | Sleeve − Shift Key | 6 | 39 | 1 |
| 76−2712 | Control − Speed Ground | 7 | 39 | 1 |
| 76−2712 | Control − Speed Ground | 8 | 39 | 1 |
| 76−4640 | Latch − Plug | 2 | 44 | 1 |
| 76−4650 | Grip − Latch | 2 | 43 | 1 |
| 76−4660 | Spring − Extension | 2 | 48 | 1 |
| 77−0500 | Plug − Discharge | 1 | 12 | 1 |
| 77−7040 | Cover − Air Cleaner | 13 | 968 | 1 |
| 77−7040 | Cover − Air Cleaner | 22 | 968 | 1 |
| 77−7140 | Bracket − Blower Housing | 16 | 980 | 1 |
| 77−7140 | Bracket − Blower Housing | 25 | 980 | 1 |
| 77−7170 | Bracket − Fuel Tank | 17 | 182 | 1 |
| 77−7170 | Bracket − Fuel Tank | 26 | 182 | 1 |
| 77−7180 | Grommet | 16 | 1002 | 1 |
| 77−7180 | Grommet | 25 | 1002 | 1 |
| 77−7190 | Guard − Flywheel | 16 | 37 | 1 |
| 77−7190 | Guard − Flywheel | 25 | 37 | 1 |
| 77−7200 | Cover − Starter | 27 | 925 | 1 |
| 77−7210 | Insert − Rewind Handle | 14 | 59 | 1 |
| 77−7210 | Insert − Rewind Handle | 23 | 59 | 1 |
| 77−7210 | Insert−Rewind Handle | 15 | 59 | 1 |
| 77−7210 | Insert−Rewind Handle | 24 | 59 | 1 |
| 77−7240 | Bowl − Fuel | 12 | 136 | 1 |
| 77−7240 | Bowl − Fuel | 21 | 136 | 1 |
| 77−7250 | Limiter − Float | 12 | 1039 | 1 |
| 77−7250 | Limiter − Float | 18 | 1039 | 1 |
| 77−7250 | Limiter − Float | 21 | 1039 | 1 |
| 77−7250 | Limiter − Float | 28 | 1039 | 1 |
| 77−7260 | Dipstick − Oil | 11 | 523 | 1 |
| 77−7260 | Dipstick − Oil | 20 | 523 | 1 |
| 77−7270 | Seal − O−Ring | 11 | 524 | 1 |
| 77−7270 | Seal − O−Ring | 18 | 524 | 1 |
| 77−7270 | Seal − O−Ring | 20 | 524 | 1 |
| 77−7270 | Seal − O−Ring | 28 | 524 | 1 |
| 77−7280 | Tube − Oil Fill | 11 | 525 | 1 |
| 77−7280 | Tube − Oil Fill | 20 | 525 | 1 |
| 77−7300 | Seal − O−Ring | 11 | 842 | 1 |
| 77−7300 | Seal − O−Ring | 18 | 842 | 1 |
| 77−7300 | Seal − O−Ring | 20 | 842 | 1 |
| 77−7300 | Seal − O−Ring | 28 | 842 | 1 |
| 77−7320 | Gasket − Rocker Cover | 10 | 1022 | 1 |
| 77−7320 | Gasket − Rocker Cover | 18 | 1022 | 1 |
| 77−7320 | Gasket − Rocker Cover | 19 | 1022 | 1 |
| 77−7320 | Gasket − Rocker Cover | 28 | 1022 | 1 |
| 77−7330 | Plug − Spark | 10 | 337 | 1 |
| 77−7330 | Plug − Spark | 19 | 337 | 1 |
| 77−7340 | Elbow − Spark Plug | 10 | 635 | 1 |
| 77−7340 | Elbow − Spark Plug | 19 | 635 | 1 |
| 77−7360 | Screw − Hex Head | 10 | 10 | 1 |
| 77−7360 | Screw − Hex Head | 19 | 10 | 1 |
| 77−7370 | Lever Assembly − | 11 | 227 | 1 |
| 77−7370 | Lever Assembly − | 20 | 227 | 1 |
| 77−7380 | Bolt − Governor Lever | 11 | 562 | 1 |
| 77−7380 | Bolt − Governor Lever | 20 | 562 | 1 |
| 77−7390 | Nut − Hex | 11 | 592 | 1 |
| 77−7390 | Nut − Hex | 20 | 592 | 1 |
| 77−7400 | Cover − Breather | 10 | 572 | 1 |
| 77−7400 | Cover − Breather | 19 | 572 | 1 |
| 77−7410 | Gasket − Breather | 10 | 9A | 1 |
| 77−7410 | Gasket − Breather | 19 | 9A | 1 |
| 77−7410 | Gasket − Breather Cover | 18 | 9A | 1 |
| 77−7410 | Gasket − Breather Cover | 28 | 9A | 1 |
| 77−7420 | Screw − Cover Mtg | 10 | 307 | 1 |
| 77−7420 | Screw − Cover Mtg | 19 | 307 | 1 |
| 77−7450 | Screw − Cap | 11 | 819 | 1 |
| 77−7450 | Screw − Cap | 20 | 819 | 1 |
| 77−7460 | Crank − Governor | 11 | 616 | 1 |
| 77−7460 | Crank − Governor | 20 | 616 | 1 |
| 77−7470 | Washer | 11 | 230 | 1 |
| 77−7470 | Washer | 20 | 230 | 1 |
| 77−7480 | Push Nut | 11 | 615 | 1 |
| 77−7480 | Push Nut | 20 | 615 | 1 |
| 77−7490 | Gear − Cam | 11 | 46 | 1 |
| 77−7490 | Gear − Cam | 20 | 46 | 1 |
| 77−7500 | Gear − Governor | 11 | 219 | 1 |
| 77−7500 | Gear − Governor | 20 | 219 | 1 |
| 77−7510 | Crankshaft | 11 | 16 | 1 |
| 77−7510 | Crankshaft | 20 | 16 | 1 |
| 77−7530 | Gear − Timing | 11 | 741 | 1 |
| 77−7530 | Gear − Timing | 20 | 741 | 1 |
| 77−7550 | Gasket − Engine Base | 11 | 12 | 1 |
| 77−7550 | Gasket − Engine Base | 18 | 12 | 1 |
| 77−7550 | Gasket − Engine Base | 20 | 12 | 1 |
| 77−7550 | Gasket − Engine Base | 28 | 12 | 1 |
| 77−7560 | Base − Engine | 11 | 18 | 1 |
| 77−7560 | Base − Engine | 20 | 18 | 1 |
| 77−7570 | Seal − Oil | 11 | 20 | 1 |
| 77−7570 | Seal − Oil | 18 | 20 | 1 |
| 77−7570 | Seal − Oil | 20 | 20 | 1 |
| 77−7570 | Seal − Oil | 28 | 20 | 1 |
| 77−7590 | Cylinder Assy | 10 | 1 | 1 |
| 77−7590 | Cylinder Assy | 19 | 1 | 1 |
| 77−7600 | Pin − Dowel | 10 | 718 | 1 |
| 77−7600 | Pin − Dowel | 19 | 718 | 1 |
| 77−7610 | Tappet − Valve | 10 | 45 | 1 |
| 77−7610 | Tappet − Valve | 19 | 45 | 1 |
| 77−7620 | Rod − Push | 10 | 1026 | 1 |
| 77−7620 | Rod − Push | 19 | 1026 | 1 |
| 77−7630 | Screw − Cylinder Head | 10 | 13 | 1 |
| 77−7630 | Screw − Cylinder Head | 19 | 13 | 1 |
| 77−7640 | Pump − Oil | 11 | 1024 | 1 |
| 77−7640 | Pump − Oil | 20 | 1024 | 1 |
| 77−7650 | Cover − Oil Pump | 11 | 979 | 1 |

*Not Illustrated

# TORO PART NUMBER INDEX (Cont.)

| Part No. | Description | Pg. Ref. No. | No. | Qty. |
|---|---|---|---|---|
| 77−7650 | Cover − Oil Pump | 20 | 979 | 1 |
| 77−7660 | O−Ring | 11 | 116A | 1 |
| 77−7660 | O−Ring | 20 | 116A | 1 |
| 77−7660 | Seal − O−Ring | 18 | 116A | 1 |
| 77−7660 | Seal − O−Ring | 28 | 116A | 1 |
| 77−7670 | Rod − Connecting | 11 | 29 | 1 |
| 77−7670 | Rod − Connecting | 20 | 29 | 1 |
| 77−7680 | Screw − Connecting Rod | 11 | 32 | 1 |
| 77−7680 | Screw − Connecting Rod | 20 | 32 | 1 |
| 77−7690 | Piston Assy (Std.) | 11 | 25 | 1 |
| 77−7690 | Piston Assy (Std.) | 20 | 25 | 1 |
| 77−7700 | Ring Set (Std.) | 11 | 26 | 1 |
| 77−7700 | Ring Set (Std.) | 20 | 26 | 1 |
| 77−7710 | Lock − Piston Pin | 11 | 27 | 1 |
| 77−7710 | Lock − Piston Pin | 20 | 27 | 1 |
| 77−7730 | Head − Cylinder | 10 | 5 | 1 |
| 77−7730 | Head − Cylinder | 19 | 5 | 1 |
| 77−7740 | Gasket − Cylinder Head | 10 | 7 | 1 |
| 77−7740 | Gasket − Cylinder Head | 18 | 7 | 1 |
| 77−7740 | Gasket − Cylinder Head | 19 | 7 | 1 |
| 77−7740 | Gasket − Cylinder Head | 28 | 7 | 1 |
| 77−7760 | Gasket − Exhaust | 10 | 883 | 1 |
| 77−7760 | Gasket − Exhaust | 18 | 883 | 1 |
| 77−7760 | Gasket − Exhaust | 19 | 883 | 1 |
| 77−7760 | Gasket − Exhaust | 28 | 883 | 1 |
| 77−7770 | Guide − Push Rod | 10 | 1034 | 1 |
| 77−7770 | Guide − Push Rod | 19 | 1034 | 1 |
| 77−7780 | Stud − Rocker Arm | 10 | 166 | 1 |
| 77−7780 | Stud − Rocker Arm | 19 | 166 | 1 |
| 77−7790 | Arm − Rocker | 10 | 1029 | 1 |
| 77−7790 | Arm − Rocker | 19 | 1029 | 1 |
| 77−7800 | Cap − Valve | 10 | 238 | 1 |
| 77−7800 | Cap − Valve | 19 | 238 | 1 |
| 77−7810 | Spring − Valve | 10 | 35 | 1 |
| 77−7810 | Spring − Valve | 19 | 35 | 1 |
| 77−7820 | Adapter Assy | 10 | 122 | 1 |
| 77−7820 | Adapter Assy | 12 | 122 | 1 |
| 77−7820 | Adapter Assy | 18 | 122 | 1 |
| 77−7820 | Adapter Assy | 19 | 122 | 1 |
| 77−7820 | Adapter Assy | 21 | 122 | 1 |
| 77−7820 | Adapter Assy | 28 | 122 | 1 |
| 77−7860 | Valve − Exhaust | 10 | 33 | 1 |
| 77−7860 | Valve − Exhaust | 19 | 33 | 1 |
| 77−7870 | Retainer − Spring | 10 | 40 | 1 |
| 77−7870 | Retainer − Spring | 19 | 40 | 1 |
| 77−7880 | Valve − Intake | 10 | 34 | 1 |
| 77−7880 | Valve − Intake | 19 | 34 | 1 |
| 77−7890 | Seal Assy − Valve | 10 | 868 | 1 |
| 77−7890 | Seal Assy − Valve | 18 | 868 | 1 |
| 77−7890 | Seal Assy − Valve | 19 | 868 | 1 |
| 77−7890 | Seal Assy − Valve | 28 | 868 | 1 |
| 77−7900 | Gasket − Valve | 10 | 868A | 1 |
| 77−7900 | Gasket − Valve | 19 | 868A | 1 |
| 77−7900 | Seal − Valve | 18 | 868A | 1 |
| 77−7900 | Seal − Valve | 28 | 868A | 1 |
| 77−7910 | Ball & Screw − Rocker | 10 | 192 | 1 |
| 77−7910 | Ball & Screw − Rocker | 19 | 192 | 1 |
| 77−7920 | Screw − Air Cleaner | 13 | 969 | 1 |
| 77−7920 | Screw − Air Cleaner | 22 | 969 | 1 |
| 77−7930 | Screw − Air Cleaner | 13 | 971 | 1 |
| 77−7930 | Screw − Air Cleaner | 22 | 971 | 1 |
| 77−7940 | Base − Air Cleaner | 13 | 966 | 1 |
| 77−7940 | Base − Air Cleaner | 22 | 966 | 1 |
| 77−7950 | Element − Filter | 13 | 535 | 1 |
| 77−7950 | Element − Filter | 22 | 535 | 1 |
| 77−7960 | Gasket − Air Cleaner | 13 | 163 | 1 |
| 77−7960 | Gasket − Air Cleaner | 18 | 163 | 1 |
| 77−7960 | Gasket − Air Cleaner | 22 | 163 | 1 |
| 77−7960 | Gasket − Air Cleaner | 28 | 163 | 1 |
| 77−7970 | Screw − Hex Head | 12 | 124 | 1 |
| 77−7970 | Screw − Hex Head | 21 | 124 | 1 |
| 77−7980 | Link − Governor | 13 | 201 | 1 |
| 77−7980 | Link − Governor | 22 | 201 | 1 |
| 77−7990 | Spring − Governor | 13 | 209 | 1 |
| 77−7990 | Spring − Governor | 22 | 209 | 1 |
| 77−8000 | Bracket − Carburetor | 13 | 620 | 1 |
| 77−8000 | Bracket − Carburetor | 22 | 620 | 1 |
| 77−8020 | Screw Assy − Speed Adj. | 13 | 98A | 1 |
| 77−8020 | Screw Assy − Speed Adj. | 22 | 98A | 1 |
| 77−8030 | Tube − Breather | 13 | 529 | 1 |
| 77−8040 | Tube − Vent | 12 | 1011 | 1 |
| 77−8040 | Tube − Vent | 21 | 1011 | 1 |
| 77−8080 | Valve − Throttle | 12 | 130 | 1 |
| 77−8080 | Valve − Throttle | 21 | 130 | 1 |
| 77−8090 | Screw − Valve Mtg | 12 | 95 | 1 |
| 77−8090 | Screw − Valve Mtg | 21 | 95 | 1 |
| 77−8110 | Valve − Inlet | 12 | 134 | 1 |
| 77−8110 | Valve − Inlet | 18 | 134 | 1 |
| 77−8110 | Valve − Inlet | 21 | 134 | 1 |
| 77−8110 | Valve − Inlet | 28 | 134 | 1 |
| 77−8130 | Shaft − Choke | 12 | 141 | 1 |
| 77−8130 | Shaft − Choke | 21 | 141 | 1 |
| 77−8140 | Spring − Choke | 13 | 618 | 1 |
| 77−8140 | Spring − Choke | 22 | 618 | 1 |
| 77−8150 | Washer − Seal | 12 | *634 | 1 |
| 77−8150 | Washer − Seal | 18 | *634 | 1 |
| 77−8150 | Washer − Seal | 21 | *634 | 1 |
| 77−8150 | Washer − Seal | 28 | *634 | 1 |
| 77−8160 | Shaft − Throttle | 12 | 131 | 1 |
| 77−8160 | Shaft − Throttle | 21 | 131 | 1 |
| 77−8170 | Float − Carburetor | 12 | 133 | 1 |
| 77−8170 | Float − Carburetor | 21 | 133 | 1 |
| 77−8180 | Pin − Float Hinge | 12 | 104 | 1 |
| 77−8180 | Pin − Float Hinge | 18 | 104 | 1 |
| 77−8180 | Pin − Float Hinge | 21 | 104 | 1 |
| 77−8180 | Pin − Float Hinge | 28 | 104 | 1 |
| 77−8190 | Bowl Assy − Carburetor | 12 | 975 | 1 |
| 77−8190 | Bowl Assy − Carburetor | 21 | 975 | 1 |
| 77−8200 | Gasket − Float Bowl | 12 | *137 | 1 |
| 77−8200 | Gasket − Float Bowl | 18 | *137 | 1 |
| 77−8200 | Gasket − Float Bowl | 21 | *137 | 1 |
| 77−8200 | Gasket − Float Bowl | 28 | *137 | 1 |
| 77−8210 | Gasket − Sealing | 12 | *116 | 1 |
| 77−8210 | Gasket − Sealing | 21 | *116 | 1 |
| 77−8210 | Washer − Bowl | 18 | 116 | 1 |
| 77−8210 | Washer − Bowl | 28 | 116 | 1 |
| 77−8220 | Screw − Hex Head | 12 | 955 | 1 |
| 77−8220 | Screw − Hex Head | 21 | 955 | 1 |
| 77−8240 | Screw − Idle Adj. | 12 | 98 | 1 |
| 77−8240 | Screw − Idle Adj. | 21 | 98 | 1 |
| 77−8270 | Housing − Blower | 16 | 304 | 1 |
| 77−8280 | Housing − Blower | 25 | 304 | 1 |
| 77−8300 | Screw − Hex Head | 14 | 65 | 1 |
| 77−8300 | Screw − Hex Head | 23 | 65 | 1 |
| 77−8300 | Screw−Hex Head | 15 | 65 | 1 |
| 77−8300 | Screw−Hex Head | 24 | 65 | 1 |
| 77−8310 | Screw − Hex Head | 11 | 305 | 1 |
| 77−8310 | Screw − Hex Head | 16 | 305 | 1 |
| 77−8310 | Screw − Hex Head | 20 | 305 | 1 |
| 77−8310 | Screw − Hex Head | 25 | 305 | 1 |

*Not Illustrated

# TORO PART NUMBER INDEX (Cont.)

| Part No. | Description | Pg. No. | Ref. No. | Qty. |
|---|---|---|---|---|
| 77−8320 | Flywheel − Magneto | 25 | 23 | 1 |
| 77−8330 | Flywheel − Magneto | 16 | 23 | 1 |
| 77−8340 | Key − Flywheel | 16 | 24 | 1 |
| 77−8340 | Key − Flywheel | 25 | 24 | 1 |
| 77−8350 | Cup − Starter | 16 | 455 | 1 |
| 77−8350 | Cup − Starter | 25 | 455 | 1 |
| 77−8360 | Nut − Flywheel | 16 | 332 | 1 |
| 77−8360 | Nut − Flywheel | 25 | 332 | 1 |
| 77−8370 | Stator Assembly | 25 | 474 | 1 |
| 77−8390 | Stud − Stator Mounting | 25 | 305A | 1 |
| 77−8400 | Wire − Ground | 16 | 356 | 1 |
| 77−8400 | Wire − Ground | 25 | 356 | 1 |
| 77−8420 | Armature − Magneto | 16 | 333 | 1 |
| 77−8420 | Armature − Magneto | 25 | 333 | 1 |
| 77−8420 | Screw − Hex Washer Hd. | 27 | 22A | 1 |
| 77−8430 | Terminal − Spark Plug | 16 | 851 | 1 |
| 77−8430 | Terminal − Spark Plug | 25 | 851 | 1 |
| 77−8450 | Starter Assy − Rewind | 14 | 608 | 1 |
| 77−8450 | Starter Assy − Rewind | 23 | 608 | 1 |
| 77−8460 | Housing − Rewind Starter | 14 | 55 | 1 |
| 77−8460 | Housing − Rewind Starter | 23 | 55 | 1 |
| 77−8470 | Retainer − Rewind Starter | 14 | 456 | 1 |
| 77−8470 | Retainer − Rewind Starter | 23 | 456 | 1 |
| 77−8470 | Washer Set | 27 | 548 | 1 |
| 77−8480 | Rope − Starter | 14 | 58 | 1 |
| 77−8480 | Rope − Starter | 23 | 58 | 1 |
| 77−8490 | Screw − Rewind Starter | 14 | 461 | 1 |
| 77−8490 | Screw − Rewind Starter | 23 | 461 | 1 |
| 77−8500 | Spring − Torsion | 14 | 515 | 1 |
| 77−8500 | Spring − Torsion | 23 | 515 | 1 |
| 77−8510 | Handle − Rewind Starter | 14 | 60 | 1 |
| 77−8510 | Handle − Rewind Starter | 23 | 60 | 1 |
| 77−8520 | Handle−Rewind Starter | 15 | 60 | 1 |
| 77−8520 | Handle−Rewind Starter | 24 | 60 | 1 |
| 77−8530 | Pawl − Starter | 14 | 459 | 1 |
| 77−8530 | Pawl − Starter | 23 | 459 | 1 |
| 77−8550 | Pin − Spring | 14 | 718A | 1 |
| 77−8550 | Pin − Spring | 23 | 718A | 1 |
| 77−8570 | Cover − Spring | 14 | 1016 | 1 |
| 77−8570 | Cover − Spring | 23 | 1016 | 1 |
| 77−8580 | Tank Assy − Fuel | 17 | 180 | 1 |
| 77−8580 | Tank Assy − Fuel | 26 | 180 | 1 |
| 77−8590 | Seal − Foam | 17 | 1041 | 1 |
| 77−8590 | Seal − Foam | 18 | 1041 | 1 |
| 77−8590 | Seal − Foam | 26 | 1041 | 1 |
| 77−8590 | Seal − Foam | 28 | 1041 | 1 |
| 77−8600 | Screw − Tank Mtg. | 17 | 674 | 1 |
| 77−8600 | Screw − Tank Mtg. | 26 | 674 | 1 |
| 77−8640 | Muffler − Exhaust | 17 | 300 | 1 |
| 77−8640 | Muffler − Exhaust | 26 | 300 | 1 |
| 77−8670 | Armature Assembly | 27 | 544 | 1 |
| 77−8670 | Motor − Starter | 27 | 309 | 1 |
| 77−8680 | Bracket Assembly | 27 | 801 | 1 |
| 77−8690 | Head Assembly | 27 | 802 | 1 |
| 77−8700 | Shell & Magnet Assembly | 27 | 803 | 1 |
| 77−8710 | Screw − Hex Washer Hd. | 27 | 310 | 1 |
| 77−8760 | Gear − Pinion | 27 | 783 | 1 |
| 77−8770 | Clutch Assembly | 27 | 513 | 1 |
| 77−8780 | Cover − Gear | 27 | 784 | 1 |
| 77−8790 | Gasket − Cover | 27 | 785 | 1 |
| 77−8800 | Screw − Hex Washer Hd. | 27 | 74 | 1 |
| 77−8810 | Pinion − Starter | 27 | 782 | 1 |
| 77−8820 | Spline − Starter | 27 | 937 | 1 |
| 77−8830 | Retainer − Lock | 27 | 938 | 1 |
| 77−8870 | Screw − Hex Head | 25 | 258 | 1 |
| 77−8900 | Gasket Set | 18 | 358 | 1 |
| 77−8900 | Gasket Set | 28 | 358 | 1 |
| 77−8910 | Drive Kit | 27 | 510 | 1 |
| 77−8930 | Carburetor Gasket Set | 18 | 977 | 1 |
| 77−8930 | Carburetor Gasket Set | 28 | 977 | 1 |
| 77−9030 | Spacer − Fuel Tank | 17 | 670 | 1 |
| 77−9030 | Spacer − Fuel Tank | 26 | 670 | 1 |
| 77−9060 | Seal − Oil | 10 | 3 | 1 |
| 77−9060 | Seal − Oil | 18 | 3 | 1 |
| 77−9060 | Seal − Oil | 19 | 3 | 1 |
| 77−9060 | Seal − Oil | 28 | 3 | 1 |
| 77−9070 | Screw − Engine Base | 11 | 22 | 1 |
| 77−9070 | Screw − Engine Base | 20 | 22 | 1 |
| 77−9200 | Screw − Hex Head | 10 | 10A | 1 |
| 77−9200 | Screw − Hex Head | 19 | 10A | 1 |
| 77−9240 | Plug − Pipe | 11 | 15 | 1 |
| 77−9240 | Plug − Pipe | 20 | 15 | 1 |
| 77−9250 | Gasket − Breather | 10 | 9 | 1 |
| 77−9250 | Gasket − Breather | 18 | 9 | 1 |
| 77−9250 | Gasket − Breather | 19 | 9 | 1 |
| 77−9250 | Gasket − Breather | 28 | 9 | 1 |
| 77−9270 | Pulley − Rewind Starter | 14 | 56 | 1 |
| 77−9270 | Pulley − Rewind Starter | 23 | 56 | 1 |
| 77−9280 | Short Block | 3 | * | 1 |
| 77−9290 | Guard − Muffler | 17 | 832 | 1 |
| 77−9290 | Guard − Muffler | 26 | 832 | 1 |
| 77−9300 | Breather Assy | 10 | 8 | 1 |
| 77−9300 | Breather Assy | 19 | 8 | 1 |
| 77−9310 | Screw − Set | 10 | 192A | 1 |
| 77−9310 | Screw − Set | 19 | 192A | 1 |
| 77−9320 | Cover − Valve | 10 | 1023 | 1 |
| 77−9320 | Cover − Valve | 19 | 1023 | 1 |
| 77−9340 | Pin Assembly − Piston | 11 | 28 | 1 |
| 77−9340 | Pin Assembly − Piston | 20 | 28 | 1 |
| 77−9360 | Screw − Cap | 17 | 188 | 1 |
| 77−9360 | Screw − Cap | 26 | 188 | 1 |
| 77−9360 | Screw − Hex Head | 11 | 188 | 1 |
| 77−9360 | Screw − Hex Head | 13 | 188 | 1 |
| 77−9360 | Screw − Hex Head | 16 | 188 | 1 |
| 77−9360 | Screw − Hex Head | 20 | 188 | 1 |
| 77−9360 | Screw − Hex Head | 22 | 188 | 1 |
| 77−9360 | Screw − Hex Head | 25 | 188 | 1 |
| 77−9410 | Tube − Breather | 10 | 11 | 1 |
| 77−9410 | Tube − Breather | 19 | 11 | 1 |
| 77−9420 | Screw − Armature Mtg. | 16 | 334 | 1 |
| 77−9420 | Screw − Armature Mtg. | 25 | 334 | 1 |
| 77−9430 | Screw − Hex Head | 17 | 346 | 1 |
| 77−9430 | Screw − Hex Head | 26 | 346 | 1 |
| 77−9470 | Tube − Breather | 22 | 529 | 1 |
| 77−9580 | Overhaul Kit − Carburetor | 18 | 121 | 1 |
| 77−9580 | Overhaul Kit − Carburetor | 28 | 121 | 1 |
| 77−9600 | Valve − Choke | 12 | 108 | 1 |
| 77−9600 | Valve − Choke | 21 | 108 | 1 |
| 77−9610 | Jet − Main | 12 | 117 | 1 |
| 77−9610 | Jet − Main | 18 | 117 | 1 |
| 77−9610 | Jet − Main | 21 | 117 | 1 |
| 77−9610 | Jet − Main | 28 | 117 | 1 |
| 77−9620 | Valve & Spring − Needle | 12 | 118 | 1 |
| 77−9620 | Valve & Spring − Needle | 18 | 118 | 1 |
| 77−9620 | Valve & Spring − Needle | 21 | 118 | 1 |
| 77−9620 | Valve & Spring − Needle | 28 | 118 | 1 |
| 77−9630 | Carburetor Assy | 12 | 125 | 1 |
| 77−9630 | Carburetor Assy | 21 | 125 | 1 |
| 77−9640 | Jet − Pilot | 12 | 147 | 1 |
| 77−9640 | Jet − Pilot | 21 | 147 | 1 |

*Not Illustrated

# TORO PART NUMBER INDEX (Cont.)

| Part No. | Description | Pg. Ref. No. | No. | Qty. |
|---|---|---|---|---|
| 77−9650 | Cap − Limiter | 12 | 1091 | 1 |
| 77−9650 | Cap − Limiter | 18 | 1091 | 1 |
| 77−9650 | Cap − Limiter | 21 | 1091 | 1 |
| 77−9650 | Cap − Limiter | 28 | 1091 | 1 |
| 78−4100 | Hose − Fuel | 17 | 187 | 1 |
| 78−4100 | Hose − Fuel | 26 | 187 | 1 |
| 78−4690 | Clamp − Hose | 17 | 601 | 1 |
| 78−4690 | Clamp − Hose | 26 | 601 | 1 |
| 80−2770 | Cup − Anti Scalp | 4 | 13 | 1 |
| 80−3770 | Retainer − Door | 2 | 42 | 1 |
| 80−4790 | Harness − Wire | 8 | 52 | 1 |
| 82−5680 | Bracket − Adjustment Trac. | 1 | 27 | 1 |
| 82−8780 | Retainer − Cable | 5 | 4 | 1 |
| 82−9150 | Chute − Discharge | 1 | 11 | 1 |
| 82−9910 | Cover − Belt | 1 | 30 | 1 |
| 83−6600 | Cable − Clutch | 7 | 41 | 1 |
| 83−6600 | Cable − Clutch | 8 | 41 | 1 |
| 84−8361 | Latch − Handle LH | 7 | 2 | 1 |
| 84−8361 | Latch − Handle LH | 8 | 2 | 1 |
| 84−8401 | Latch − Handle RH | 7 | 3 | 1 |
| 84−8401 | Latch − Handle RH | 8 | 3 | 1 |
| 91−2253 | Cover − Wheel | 5 | 21 | 1 |
| 92−1720 | Kicker − RH Front | 1 | 7 | 1 |
| 92−1730 | Kicker − LH Front | 1 | 8 | 1 |
| 92−1743 | Charger − Battery | 8 | * | 1 |
| 92−1750 | Plate − Kicker Rear | 1 | 6 | 1 |
| 92−2260 | Screw − Handle | 7 | 10 | 3 |
| 92−2260 | Screw − Handle | 8 | 10 | 3 |
| 92−2261 | Screw − Handle | 7 | 38 | 1 |
| 92−2261 | Screw − Handle | 8 | 38 | 1 |
| 92−2267 | Screw − Handle | 7 | 37 | 1 |
| 92−2267 | Screw − Handle | 8 | 37 | 1 |
| 92−2277 | Handle − Upper | 7 | 8 | 1 |
| 92−2277 | Handle − Upper | 8 | 8 | 1 |
| 92−2279 | Decal − HOC | 1 | 17 | 4 |
| 92−2289 | Plate − Logo Toro | 3 | 3 | 1 |
| 92−3146 | Decal − Panel Front | 8 | 15 | 1 |
| 92−4086 | Grip − Foam | 7 | 9 | 1 |
| 92−4086 | Grip − Foam | 8 | 9 | 1 |
| 92−9665 | Screw − Phillips Hd. | 7 | 17 | 4 |
| 92−9665 | Screw − Phillips Hd. | 8 | 17 | 4 |
| 93−0248 | Decal − Warning | 2 | 34 | 1 |
| 93−3154 | Plate − Latch | 2 | 47 | 1 |
| 93−3696 | Decal − Deck | 1 | 2 | 1 |
| 93−3697 | Decal − Panel Front | 7 | 15 | 1 |
| 93−3699 | Decal − Engine | 3 | 4 | 1 |
| 93−4106 | Blade − 21 | 4 | 11 | 1 |
| 93−4126 | Spacer − Blade | 4 | 9 | 1 |
| 93−4181 | Stiffener − Blade | 4 | 12 | 1 |
| 93−7167 | Decal − Instruction | 7 | 13 | 1 |
| 93−7168 | Decal − Instruction | 8 | 13 | 1 |
| 93−7351 | Door − Discharge | 1 | 10 | 1 |
| 93−8470 | Screw − Clamp (P/W Eng.) | 3 | 5 | 1 |
| 94−1601 | Brake Plate Assembly | 3 | 20 | 1 |
| 94−1605 | Engine − GTS 150 | 3 | 1 | 1 |
| 94−1606 | Engine − GTS 150 | 3 | 1 | 1 |
| 94−1651 | Plug − Welch | 12 | 127 | 1 |
| 94−1651 | Plug − Welch | 18 | 127 | 1 |
| 94−1651 | Plug − Welch | 21 | 127 | 1 |
| 94−1651 | Plug − Welch | 28 | 127 | 1 |
| 94−1653 | Cup − Starter | 15 | 455 | 1 |
| 94−1653 | Cup − Starter | 24 | 455 | 1 |
| 94−1654 | Pawl−Starter | 15 | 459 | 1 |
| 94−1654 | Pawl−Starter | 24 | 459 | 1 |
| 94−1655 | Spring−Torsion | 15 | 515 | 1 |
| 94−1655 | Spring−Torsion | 24 | 515 | 1 |
| 94−1656 | Housing−Rewind Starter | 15 | 55 | 1 |
| 94−1656 | Housing−Rewind Starter | 24 | 55 | 1 |
| 94−1657 | Pulley−Rewind Starter | 15 | 56 | 1 |
| 94−1657 | Pulley−Rewind Starter | 24 | 56 | 1 |
| 94−1659 | Retainer − Rewind Starter | 15 | 456 | 1 |
| 94−1659 | Retainer − Rewind Starter | 24 | 456 | 1 |
| 94−1660 | Screw−Rewind Starter | 15 | 461 | 1 |
| 94−1660 | Screw−Rewind Starter | 24 | 461 | 1 |
| 94−1668 | Rope−Starter (Cut To Suit) | 15 | 58 | 1 |
| 94−1668 | Rope−Starter (Cut To Suit) | 24 | 58 | 1 |
| 94−1678 | Starter Assy−Rewind | 15 | 608 | 1 |
| 94−1678 | Starter Assy−Rewind | 24 | 608 | 1 |
| 218−461 | Nut − Hex | 8 | 48 | 1 |
| 2210−249 | Clamp − Casing | 3 | 6 | 1 |
| 237−153 | O−Ring | 5 | 7 | 2 |
| 2412−50 | Clip − Tubing Convoluted | 7 | 44 | 4 |
| 2412−50 | Clip − Tubing Convoluted | 8 | 44 | 3 |
| 2412−83 | R−Clamp | 2 | 39 | 1 |
| 2412−87 | Clamp − Cable | 2 | 37 | 1 |
| 302−56 | Fitting − Grease | 6 | 20 | 2 |
| 322−16 | Screw − Hex Hd. Cap | 3 | 24 | 1 |
| 3254−5 | Washer − Lock | 8 | 47 | 1 |
| 3256−23 | Washer − Flat | 3 | 10 | 2 |
| 3256−24 | Washer − Flat | 6 | 12 | 1 |
| 3257−17 | Key − Woodruff | 4 | 1 | 1 |
| 3272−10 | Pin − Cotter | 5 | 3 | 1 |
| 3290−378 | Tie − Cable | 7 | 45 | 3 |
| 3290−378 | Tie − Cable | 8 | 45 | 5 |
| 3290−422 | Nut − Push | 9 | 1 | 2 |
| 3295−35 | Rivet | 2 | 45 | 1 |
| 3296−5 | Locknut | 6 | 11 | 1 |
| 3296−6 | Nut − Lock | 1 | 18 | 4 |
| 3296−6 | Nut − Lock | 5 | 24 | 2 |
| 3296−33 | Nut − Lock | 4 | 10 | 1 |
| 3296−47 | Nut − Lock | 3 | 25 | 2 |
| 3296−47 | Nut − Lock | 7 | 46 | 1 |
| 3296−47 | Nut − Lock | 8 | 53 | 1 |
| 3296−72 | Nut − Lock | 7 | 6 | 3 |
| 3296−72 | Nut − Lock | 8 | 6 | 3 |
| 3296−74 | Nut − Flange | 7 | 35 | 2 |
| 3296−74 | Nut − Flange | 8 | 35 | 2 |
| 3296−75 | Nut − Lock | 7 | 34 | 1 |
| 3296−75 | Nut − Lock | 8 | 34 | 1 |
| 32104−96 | Screw − Hex Socket Hd. | 3 | 15 | 1 |
| 32104−107 | Screw − Hex Hd. | 3 | 9 | 1 |
| 32121−9 | Pin − Roll | 7 | 27 | 1 |
| 32121−9 | Pin − Roll | 8 | 27 | 1 |
| 32121−120 | Pin − Coil | 6 | 52 | 1 |
| 32144−70 | Screw − Tapping | 5 | 22 | 1 |
| 32144−70 | Screw − Tapping | 3 | 26 | 2 |
| 32144−70 | Screw − Tapping | 1 | 28 | 4 |
| 32144−85 | Screw − Hex Hd. | 1 | 22 | 2 |
| 32144−85 | Screw − Hex Hd. Cap | 5 | 25 | 2 |
| 32144−102 | Screw | 3 | 7 | 3 |
| 32144−111 | Screw − PPH | 1 | 9 | 6 |
| 32144−112 | Screw − Thr'd Form | 2 | 40 | 1 |

OPTIONAL EQUIPMENT

Recycler Side Discharge Kit ..... Model No. 59197
Dethatcher Kit ..... Model No. 59131
Mow & Feed ..... Model No. 52070

*Not Illustrated

## PRODUCT CHANGES

In an effort to make improvements available to TORO owners as quickly as possible, minor changes are incorporated into Toro's products from time to time that do not become immediately shown in the Parts Catalog. If such a change has been made in your unit, which is not reflected in your manual, see your TORO Distributor or his Authorized TORO Service Dealer for information and part numbers.

## COUNTRIES OTHER THAN THE UNITED STATES OR CANADA

Customers who have purchased TORO products exported from the United States or Canada should contact their Toro Distributor (Dealer) to obtain guarantee policies for your country, province or state. If for any reason you are dissatisfied with your Distributor's service or have difficulty obtaining guarantee information, contact the TORO importer. If all other remedies fail, you may contact us at The Toro Company.

# MAINTENANCE RECORD

| Date | | | | | | | | |
|---|---|---|---|---|---|---|---|---|
| | | | | | | | | |
| | | | | | | | | |
| | | | | | | | | |
| | | | | | | | | |
| | | | | | | | | |
| | | | | | | | | |
| | | | | | | | | |
| | | | | | | | | |
| | | | | | | | | |
| | | | | | | | | |
| | | | | | | | | |
| | | | | | | | | |
| | | | | | | | | |
| | | | | | | | | |
| | | | | | | | | |
| | | | | | | | | |
| | | | | | | | | |
| | | | | | | | | |
| | | | | | | | | |
| | | | | | | | | |

Compliance with Radio Interference Regulations Certified.
Certifie Conforme au Reglement sur le Brouillage Radioelectrique.

Litho in U.S.A.

# MAINTENANCE RECORD

| Date | | | | | | | | |
|---|---|---|---|---|---|---|---|---|
| | | | | | | | | |
| | | | | | | | | |
| | | | | | | | | |
| | | | | | | | | |
| | | | | | | | | |
| | | | | | | | | |
| | | | | | | | | |
| | | | | | | | | |
| | | | | | | | | |
| | | | | | | | | |
| | | | | | | | | |
| | | | | | | | | |
| | | | | | | | | |
| | | | | | | | | |
| | | | | | | | | |
| | | | | | | | | |
| | | | | | | | | |
| | | | | | | | | |
| | | | | | | | | |
| | | | | | | | | |
| | | | | | | | | |
| | | | | | | | | |
| | | | | | | | | |
| | | | | | | | | |
| | | | | | | | | |
| | | | | | | | | |
| | | | | | | | | |
| | | | | | | | | |
| | | | | | | | | |
| | | | | | | | | |
| | | | | | | | | |
| | | | | | | | | |

# MAINTENANCE RECORD

| Date | | | | | | | | |
|---|---|---|---|---|---|---|---|---|
| | | | | | | | | |
| | | | | | | | | |
| | | | | | | | | |
| | | | | | | | | |
| | | | | | | | | |
| | | | | | | | | |
| | | | | | | | | |
| | | | | | | | | |
| | | | | | | | | |
| | | | | | | | | |
| | | | | | | | | |
| | | | | | | | | |
| | | | | | | | | |
| | | | | | | | | |
| | | | | | | | | |
| | | | | | | | | |
| | | | | | | | | |
| | | | | | | | | |
| | | | | | | | | |
| | | | | | | | | |
| | | | | | | | | |
| | | | | | | | | |
| | | | | | | | | |
| | | | | | | | | |
| | | | | | | | | |
| | | | | | | | | |
| | | | | | | | | |
| | | | | | | | | |
| | | | | | | | | |
| | | | | | | | | |
| | | | | | | | | |