FORM NO. 3318–221 REV. A

TORO®

MODEL NO. 20475–6900001 & UP
MODEL NO. 20476–6900001 & UP

PARTS CATALOG

21” RECYCLER®
Rear Bagging Mower

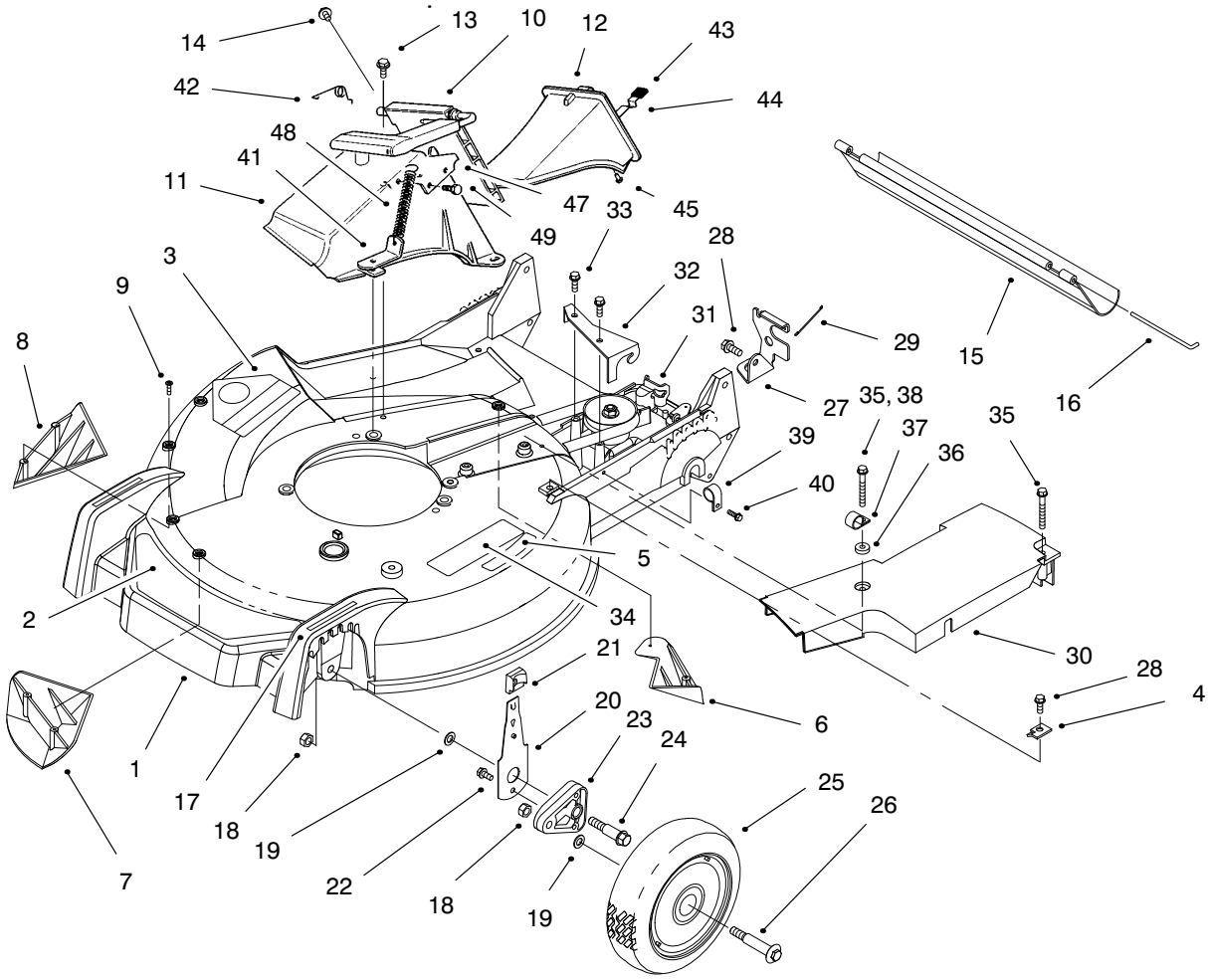

HOUSING ASSEMBLY

Ref. No.	Part No.	Description	No. Used
1	16–9589	Housing – 21” (Incl. Ref. #1, 3, 5–9, & 17 pg. 1) (Incl. Ref. # 34, pg. 2) (Incl. Ref. #17 & 18, pg. 3)	1
2	93–3696	Decal – Deck	1
3	43–8480	Decal – Danger	1
4	62–3720	Clamp – Cable	1
5	46–7370	Decal – Step Pad	1
6	92–1750	Plate – Kicker Rear	1
7	92–1720	Kicker – RH Front	1
8	92–1730	Kicker – LH Front	1
9	32144–111	Screw – PPH	6
10	93–7351	Door – Discharge	1
11	82–9150	Chute – Discharge	1
12	77–0500	Plug – Discharge (Incl. Ref. #43–45)	1
13	46–6811	Screw – Hex Washer Hd.	3
14	46–6810	Screw – Hex Washer Hd.	1
15	44–0580	Shield – Trailing	1
16	33–3208	Rod – Shield	1
17	92–2279	Decal – HOC	4
18	3296–6	Nut – Lock	4
19	40–1940	Washer	4
20	66–0541	Spring Arm Ass’y – Front	2
21	25–7740	Knob – Arm	4
22	32144–85	Screw – Hex Hd.	2
23	66–0580	Arm – Pivot	2
24	66–0560	Screw – Shoulder	2
25	14–9989	Wheel & Tire Assembly	2
26	27–6232	Bolt – Wheel	2
27	82–5680	Bracket – Adjustment Trac.	1
28	32144–70	Screw – Tapping	4
29	46–7030	Retainer – Cable	1
30	82–9910	Cover – Belt	1
31	62–6673	Gear Case Assembly	1

© The TORO Company –1995 REV. 1997
All Rights Reserved

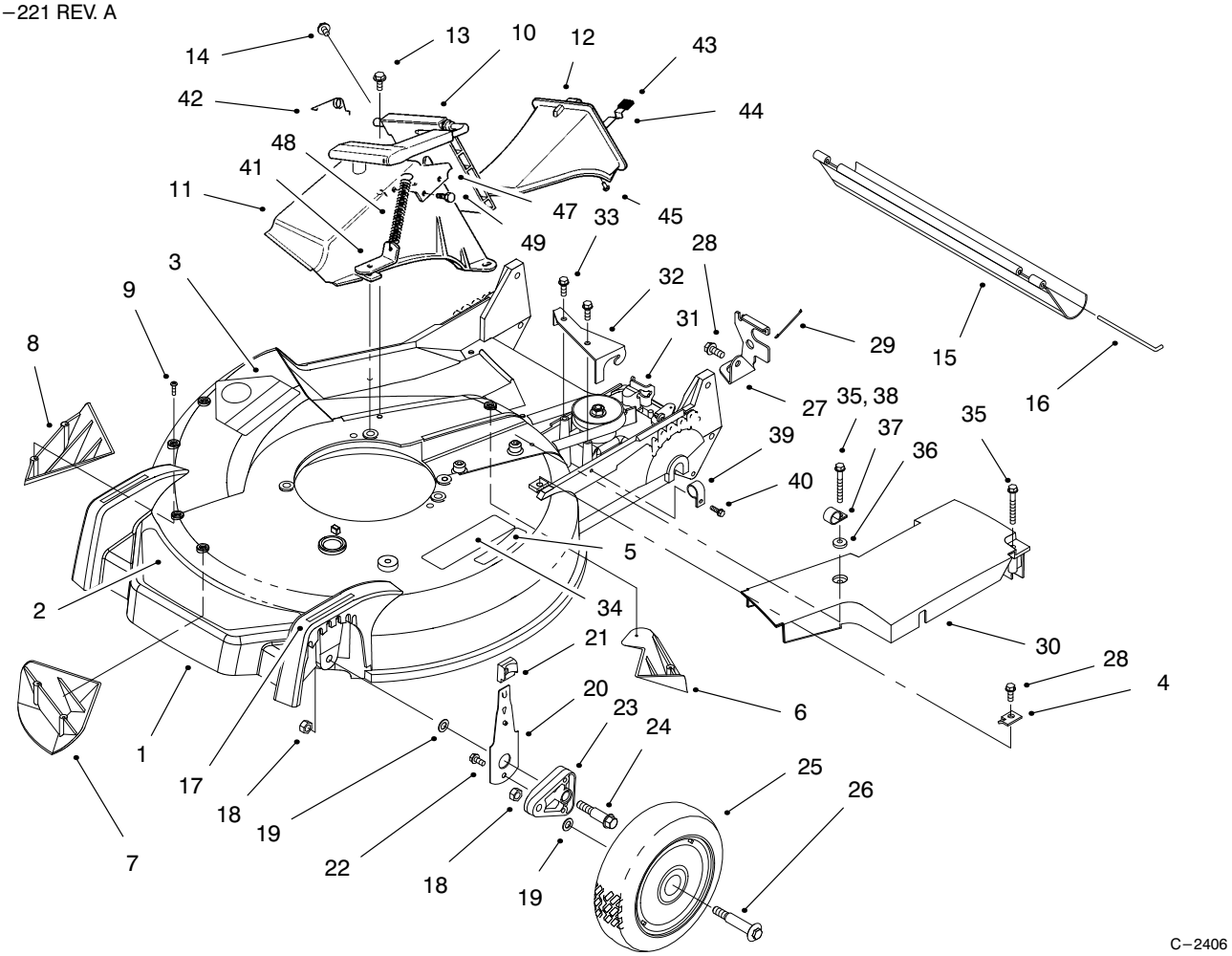

HOUSING ASSEMBLY (Continued)

Ref. No.	Part No.	Description	No. Used
32	62−4320	Bracket − Guide Belt	1
33	49−2040	Screw − Hex Hd.	2
34	93−0248	Decal − Warning	1
35	37−7260	Screw − Tapping (Model No. 20475 Only)	2
35	37−7260	Screw − Tapping (Model No. 20476 Only)	1
36	3−5792	Washer (Model No. 20476 Only)	1
37	2412−87	Clamp − Cable (Model No. 20476 Only)	1
38	37−7262	Screw − Special (Model No. 20476 Only)	1

Ref. No.	Part No.	Description	No. Used
39	2412−83	R−Clamp (Model No. 20476 Only)	1
40	32144−112	Screw − Thr'd Form (Model No. 20476 Only)	1
41	71−9350	Bracket − Spring	1
42	80−3770	Retainer − Door	1
43	76−4650	Grip − Latch	1
44	76−4640	Latch − Plug	1
45	3295−35	Rivet	1
47	93−3154	Plate − Latch	1
48	76−4660	Spring − Extension	1
49	46−8090	Screw − Tapping	2

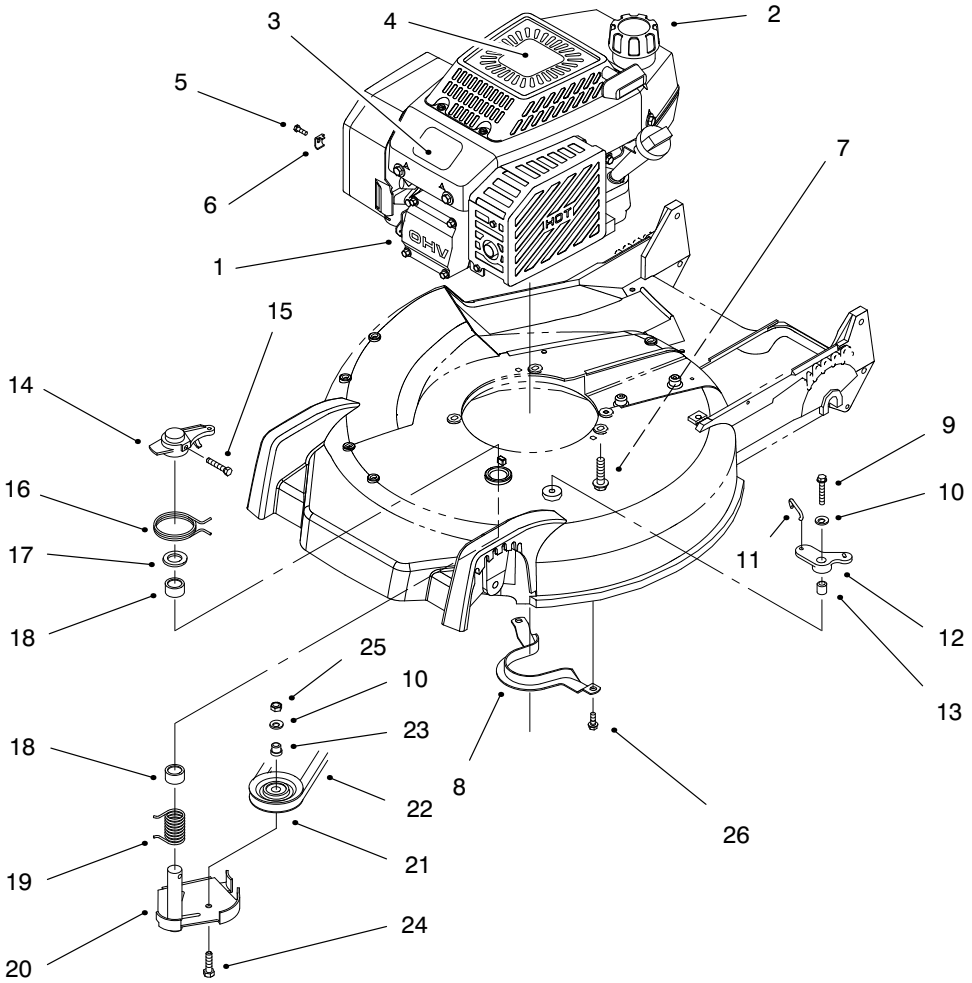

C−2268

ENGINE ASSEMBLY

Ref. No.	Part No.	Description	No. Used
1	94−1605	Engine − GTS 150 (Model No. 20475 Only)	1
1	94−1606	Engine − GTS 150 (Model No. 20476 Only)	1
2	55−3570	Gas Cap Assembly	1
3	92−2289	Plate − Logo Toro	1
4	93−3699	Decal − Engine	1
5	93−8470	Screw − Clamp (P/W Eng.)	1
6	2210−249	Clamp − Casing (P/W Eng.)	1
7	32144−102	Screw	3
8	66−0570	Guide − Belt	1
9	32104−107	Screw − Hex Hd.	1
10	3256−23	Washer − Flat	2
11	49−2810	Link − Control	1
12	49−7960	Crank − Bell	1
13	49−7950	Sleeve − Bell Crank	1
14	49−2820	Lever	1
15	32104−96	Screw − Hex Socket Hd.	1
16	49−7970	Spring − Torsion Upper	1
17	70−1160	Washer − PM	1
18	68−9780	Bearing	2
19	46−5670	Spring − Torsion Lower	1
20	94−1601	Brake Plate Assembly	1
21	46−5650	Pulley − Idler	1
22	42−0884	V−Belt − BBC	1
23	46−5630	Hub − Pulley Idler	1
24	322−16	Screw − Hex Hd. Cap	1
25	3296−47	Nut − Lock	2
26	32144−70	Screw − Tapping	2
*	77−9280	Short Block	1

*Not Illustrated

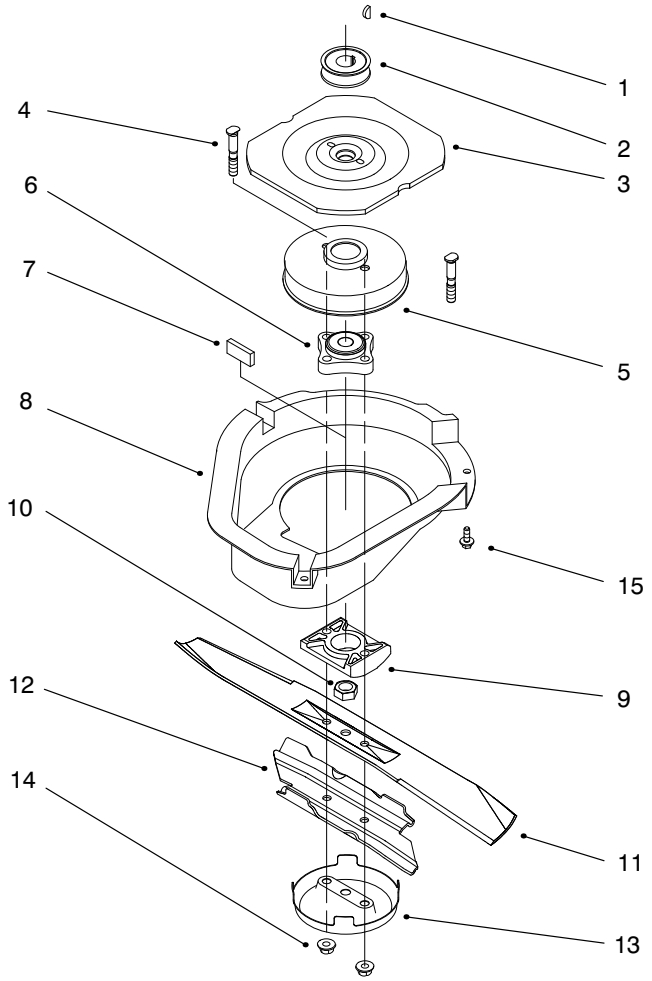

BLADE BRAKE CLUTCH ASSEMBLY

Ref. No.	Part No.	Description	No. Used
1	3257−17	Key − Woodruff	1
2	62−7560	Pulley − Driver	1
3	56−6160	Flywheel − BBC	1
4	42−3190	Bolt − Blade	2
5	56−6170	Drum − Brake	1
6	42−6890	Hub Assembly − BBC	1
7	52−3480	Damper − Vibration	2
8	46−5692	Shield − BBC	1

Ref. No.	Part No.	Description	No. Used
9	93−4126	Spacer − Blade	1
10	3296−33	Nut − Lock	1
11	93−4106	Blade − 21”	1
12	93−4181	Stiffener − Blade	1
13	80−2770	Cup − Anti Scalp	1
14	54−9190	Nut − Lock	2
15	46−6811	Screw − Hex Washer Hd.	3

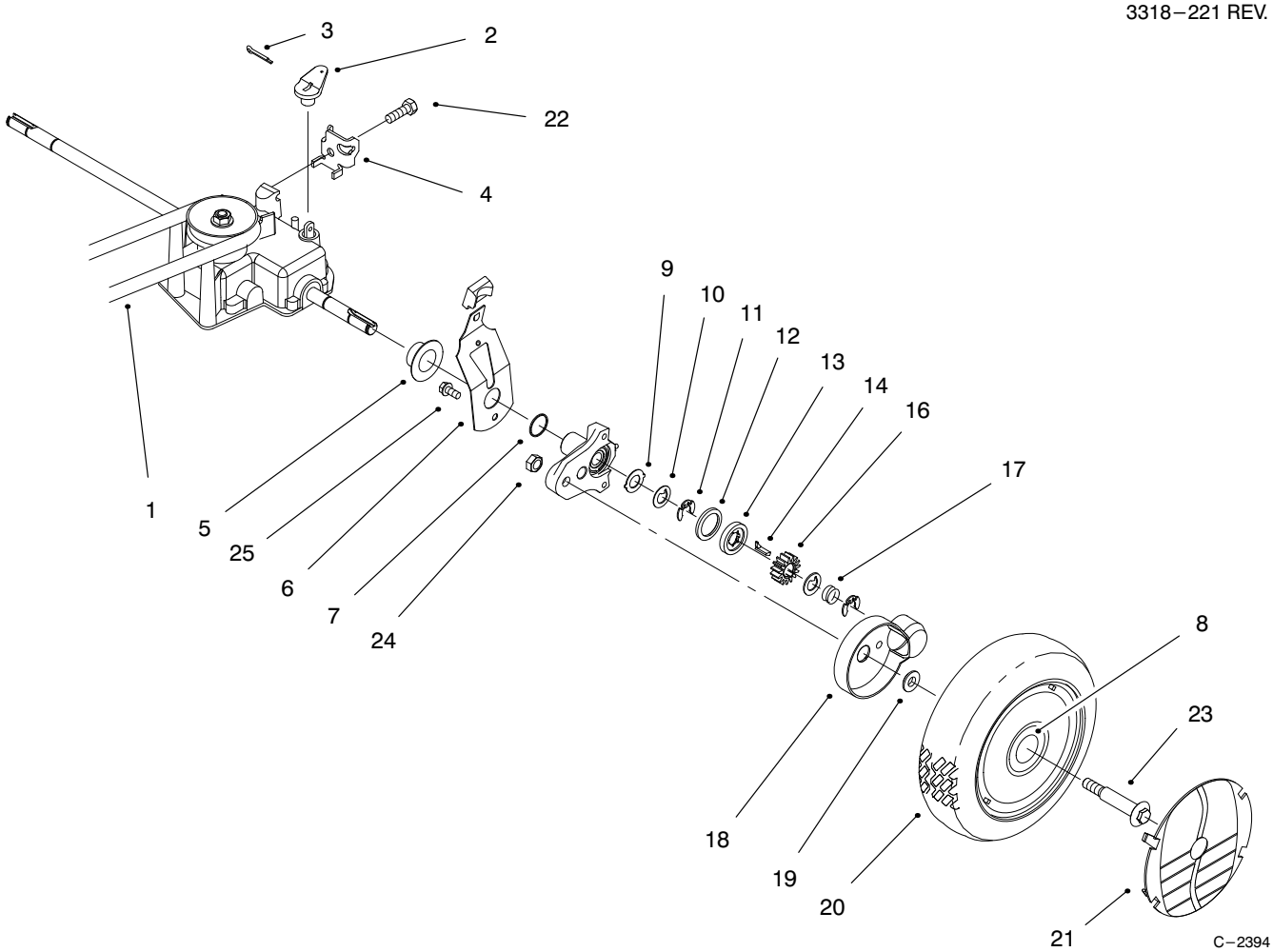

REAR AXLE ASSEMBLY

Ref. No.	Part No.	Description	No. Used
1	62−3900	V−Belt	1
2	60−8821	Lever − Shift	1
3	3272−10	Pin − Cotter	1
4	82−8780	Retainer − Cable	1
5	42−3520	Cap − End	2
6	63−8721	Spring Arm Ass'y	2
7	237−153	O−Ring	2
8	27−6250	Bushing − Wheel	4
9	65−4730	Washer − Thrust	2
10	65−4740	Washer − Thrust Keyed	4
11	65−2720	Ring − Retaining	4
12	65−4710	Ring − Friction	2
13	65−4760	Washer	2

Ref. No.	Part No.	Description	No. Used
14	66−6050	Key − Rocking LH	1
*	66−6040	Key − Rocking RH	1
16	65−4750	Gear − Pinion	2
17	65−4720	Spring − Compression	2
18	74−1660	Cover − Wheel	2
19	74−1671	Spacer − Cover Wheel	2
20	16−0029	Wheel & Tire Assembly (Incl. Ref. #8)	2
21	91−2253	Cover − Wheel	1
22	32144−70	Screw − Tapping	1
23	27−6232	Bolt − Wheel	4
24	3296−6	Nut − Lock	2
25	32144−85	Screw − Hex Hd. Cap	2

*Not Illustrated

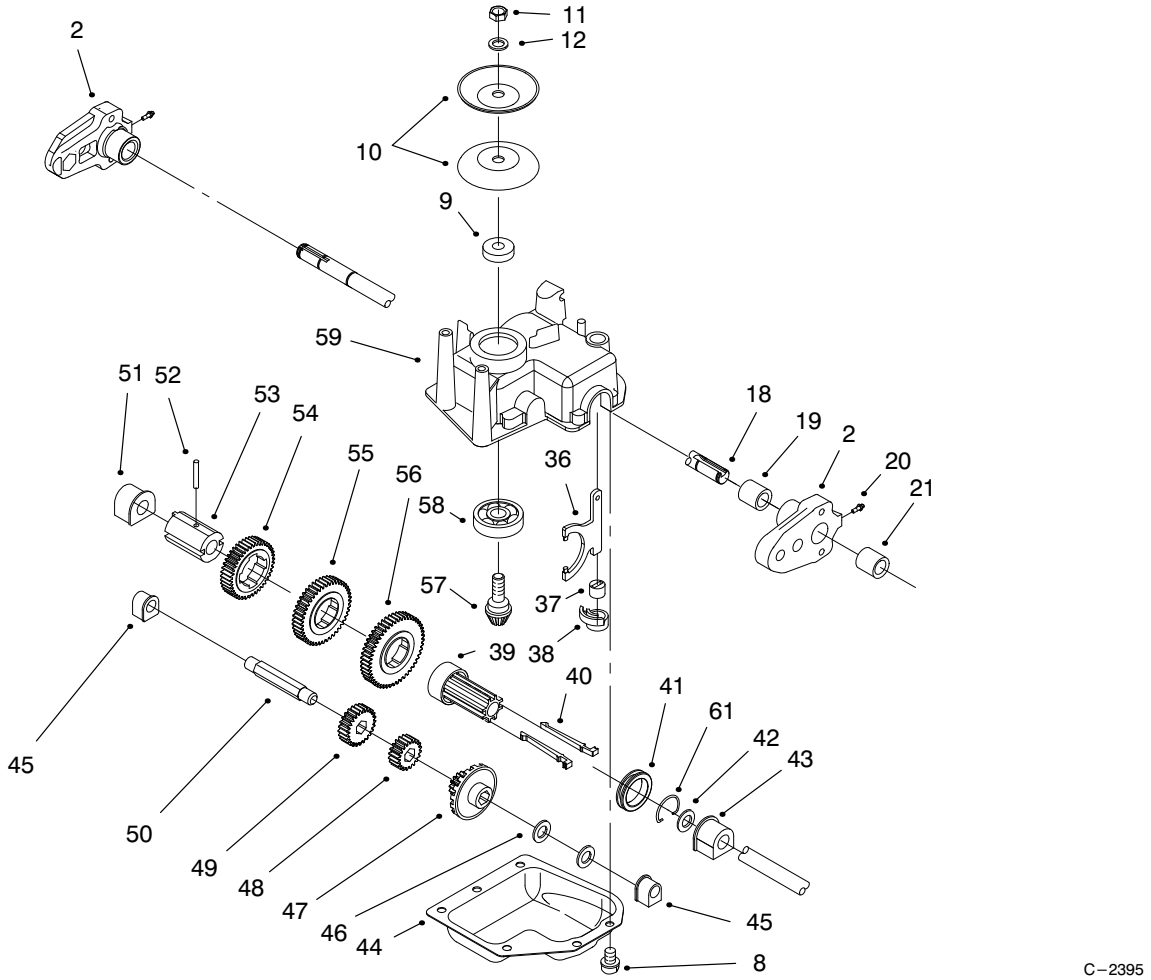

GEAR CASE ASSEMBLY

Ref. No.	Part No.	Description	No. Used
2	63−8701−03	Pivot Arm Assembly (Incl. Ref # 19, 20, & 21)	2
8	49−2040	Screw − Self Tapping	6
9	62−6660	Spacer	1
10	60−8840	Pulley − Half	2
11	3296−5	Locknut	1
12	3256−24	Washer − Flat	1
18	65−4770	Shaft − Output	1
19	70−9760	Bushing	2
20	302−56	Fitting − Grease	2
21	48−2060	Needle Bearing	2
36	60−8870	Yoke − Shift	1
37	29−9570	Bushing − Yoke	1
38	60−8810	Retainer − Shift Fork	1
39	76−0780	Sleeve − Shift Key	1
40	76−0760	Key − Shift	2
41	76−0770	Collar − Shift	1
42	36−4780	Washer − Thrust	1
43	60−8770	Bushing − Output Shaft	1

Ref. No.	Part No.	Description	No. Used
44	60−8730	Cover − Gear Case	1
45	60−8750	Bushing − Int. Shaft	2
46	36−4791	Washer − Thrust	2
47	55−3760	Gear − Pinion 15 Tooth	1
48	55−3780	Gear − Pinion 20 Tooth	1
49	55−3800	Gear − Pinion	1
50	60−8800	Shaft − Intermediate	1
51	60−8850	Bushing − Output Shaft	1
52	32121−120	Pin − Coil	1
53	60−8790	Sleeve − Gear	1
54	55−3810	Gear − 39 Tooth 3rd Gear	1
55	55−3790	Gear − 44 Tooth 2nd Gear	1
56	55−3770	Gear − 49 Tooth 1st Gear	1
57	60−8890	Pinion − Bevel	1
58	38−7820	Bearing − Ball	1
59	60−8710	Gear Case − Upper	1
61	65−5250	Clip − Spring	1
*	62−6673	Gear Case Assembly	1

*Not Illustrated

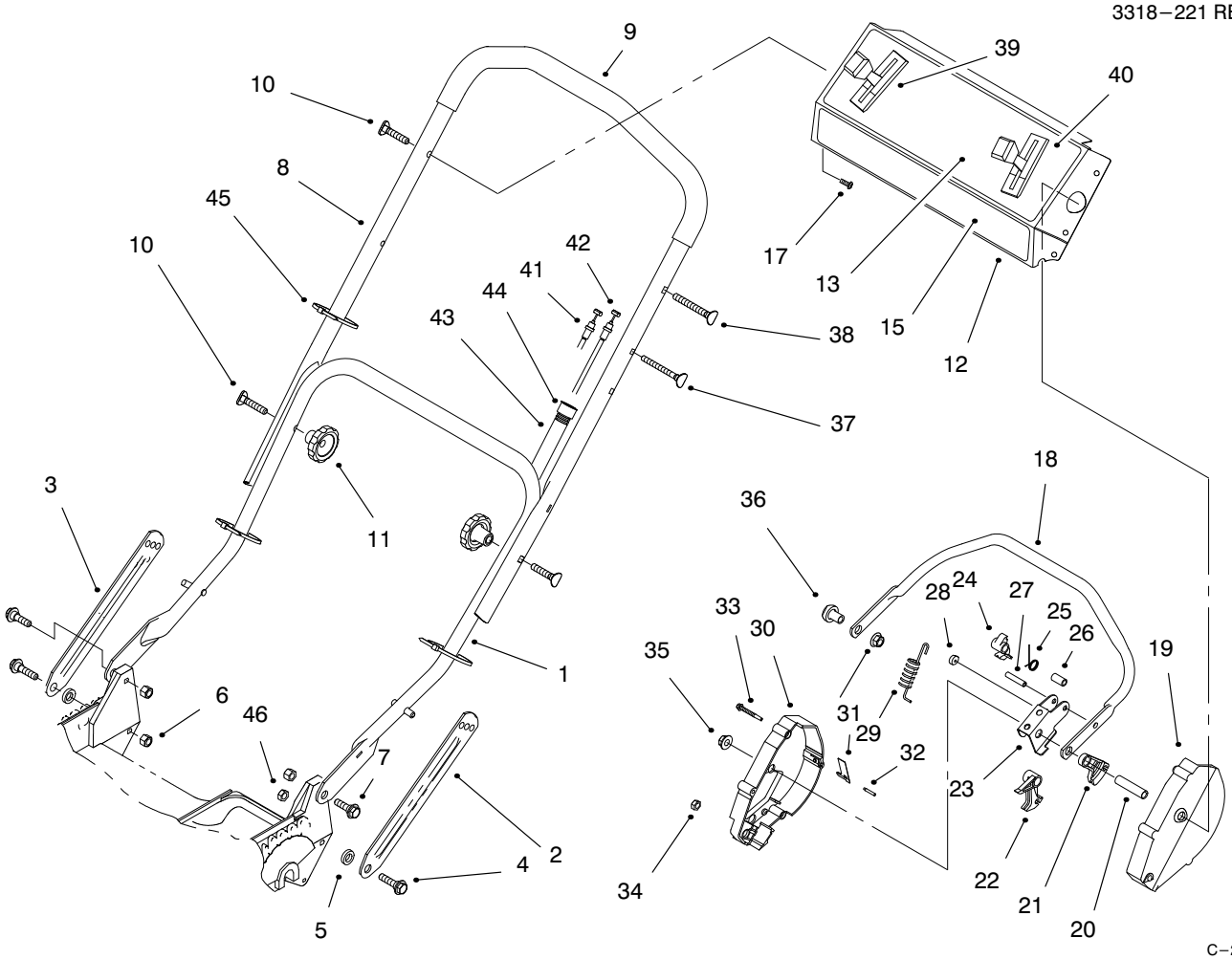

HANDLE ASSEMBLY (Model No. 20475 Only)

Ref. No.	Part No.	Description	No. Used
1	43−1362	Handle − Lower	1
2	84−8361	Latch − Handle LH	1
3	84−8401	Latch − Handle RH	1
4	27−7210	Screw − Shoulder	2
5	3−3287	Spacer	2
6	3296−72	Nut − Lock	3
7	27−7211	Screw − Shoulder	2
8	92−2277	Handle − Upper	1
9	92−4086	Grip − Foam	1
10	92−2260	Screw − Handle	3
11	19−4050	Knob	2
12	16−9569	Panel − Control (Incl. Ref. #13)	1
13	93−7167	Decal − Instruction	1
15	93−3697	Decal − Panel Front	1
17	92−9665	Screw − Phillips Hd.	4
18	52−7430	Bar − Control	1
19	46−5460	Housing − Control LH	1
20	46−5590	Spacer	1
21	46−5520	Lever − Traction	1
22	66−0180	Rocker	1
23	46−5540	Lever − Cable	1
24	46−5530	Hook − Control	1

Ref. No.	Part No.	Description	No. Used
25	46−5510	Spring − Torsion	1
26	46−5550	Bushing − PM	1
27	32121−9	Pin − Roll	1
28	66−0170	Washer − Nylon	1
29	66−0190	Spring − Detent	1
30	66−0160	Housing − Control RH	1
31	52−7410	Spring − Leaf	1
32	57−6290	Pin − Insert	1
33	46−7040	Screw − Hex Washer Hd.	3
34	3296−75	Nut − Lock	1
35	3296−74	Nut − Flange	2
36	49−1630	Spacer − Support	1
37	92−2267	Screw − Handle	1
38	92−2261	Screw − Handle	1
39	76−2712	Control − Speed Ground	1
40	71−8391	Control − Control	1
41	83−6600	Cable − Clutch	1
42	46−5480	Cable − Traction	1
43	46−6440	Cover − Cables Control	1
44	2412−50	Clip − Tubing Convoluted	4
45	3290−378	Tie − Cable	3
46	3296−47	Nut − Lock	1

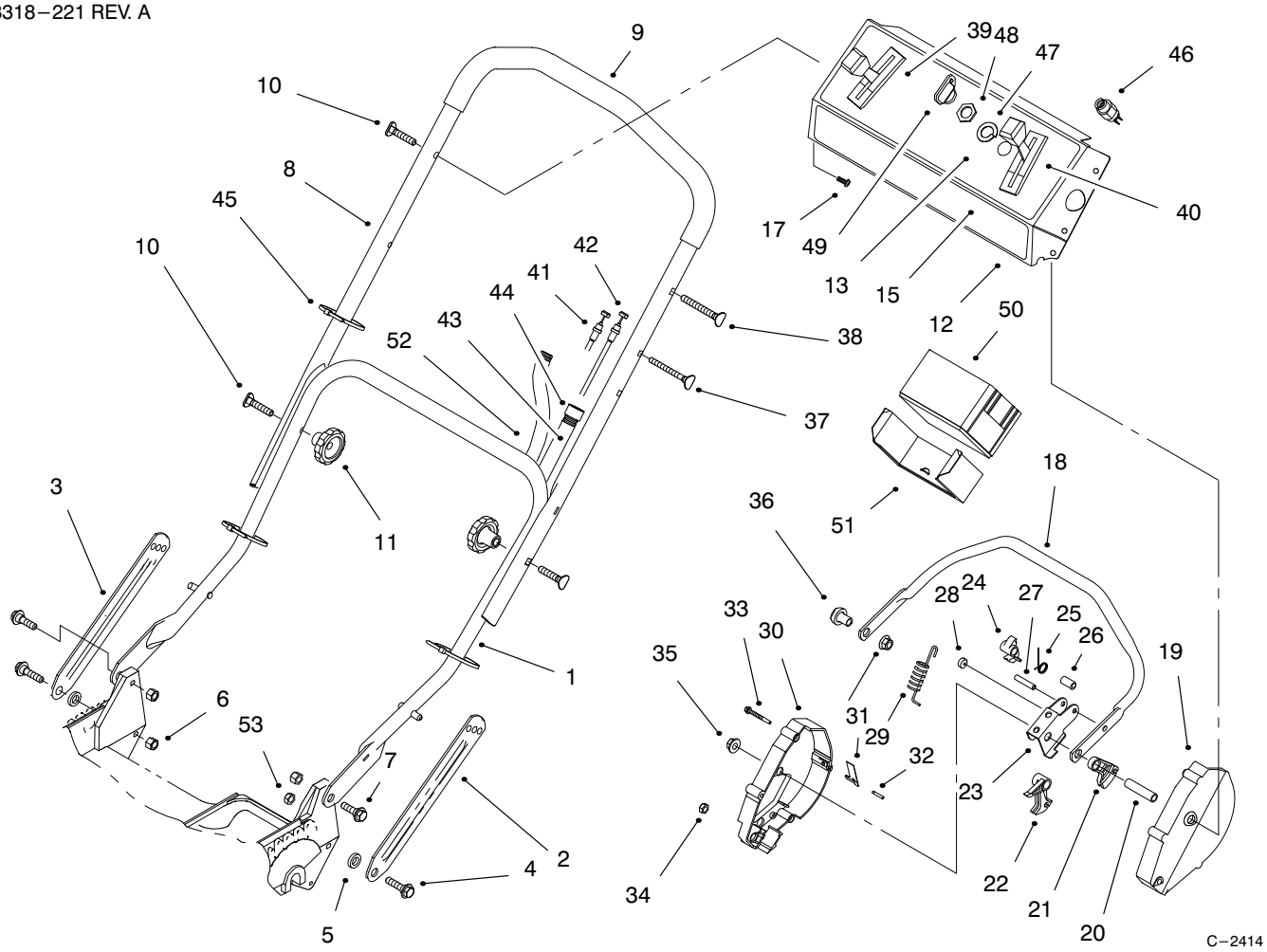

HANDLE ASSEMBLY (Model No. 20476 Only)

Ref. No.	Part No.	Description	No. Used
1	43−1362	Handle − Lower	1
2	84−8361	Latch − Handle LH	1
3	84−8401	Latch − Handle RH	1
4	27−7210	Screw − Shoulder	2
5	3−3287	Spacer	2
6	3296−72	Nut − Lock	3
7	27−7211	Screw − Shoulder	2
8	92−2277	Handle − Upper	1
9	92−4086	Grip − Foam	1
10	92−2260	Screw − Handle	3
11	19−4050	Knob	2
12	16−9579	Panel − Control (Incl. Ref. #13)	1
13	93−7168	Decal − Instruction	1
15	92−3146	Decal − Panel Front	1
17	92−9665	Screw − Phillips Hd.	4
18	52−7430	Bar − Control	1
19	46−5460	Housing − Control LH	1
20	46−5590	Spacer	1
21	46−5520	Lever − Traction	1
22	66−0180	Rocker	1
23	46−5540	Lever − Cable	1
24	46−5530	Hook − Control	1
25	46−5510	Spring − Torsion	1
26	46−5550	Bushing − PM	1
27	32121−9	Pin − Roll	1
28	66−0170	Washer − Nylon	1

Ref. No.	Part No.	Description	No. Used
29	66−0190	Spring − Detent	1
30	66−0160	Housing − Control RH	1
31	52−7410	Spring − Leaf	1
32	57−6290	Pin − Insert	1
33	46−7040	Screw − Hex Washer Hd.	3
34	3296−75	Nut − Lock	1
35	3296−74	Nut − Flange	2
36	49−1630	Spacer − Support	1
37	92−2267	Screw − Handle	1
38	92−2261	Screw − Handle	1
39	76−2712	Control − Speed Ground	1
40	71−8391	Control − Control	1
41	83−6600	Cable − Clutch	1
42	46−5480	Cable − Traction	1
43	46−6440	Cover − Cables Control	1
44	2412−50	Clip − Tubing Convoluted	3
45	3290−378	Tie − Cable	5
46	46−5780	Switch − Starter (Incl. Ref. #47 & 48)	1
47	3254−5	Washer − Lock	1
48	218−461	Nut − Hex	1
49	63−8360	Key − Ignition	1
50	55−7520	Battery Assembly	1
51	55−8180	Retainer − Battery	1
52	80−4790	Harness − Wire	1
53	3296−47	Nut − Lock	1
*	92−1743	Charger − Battery	1

*Not Illustrated

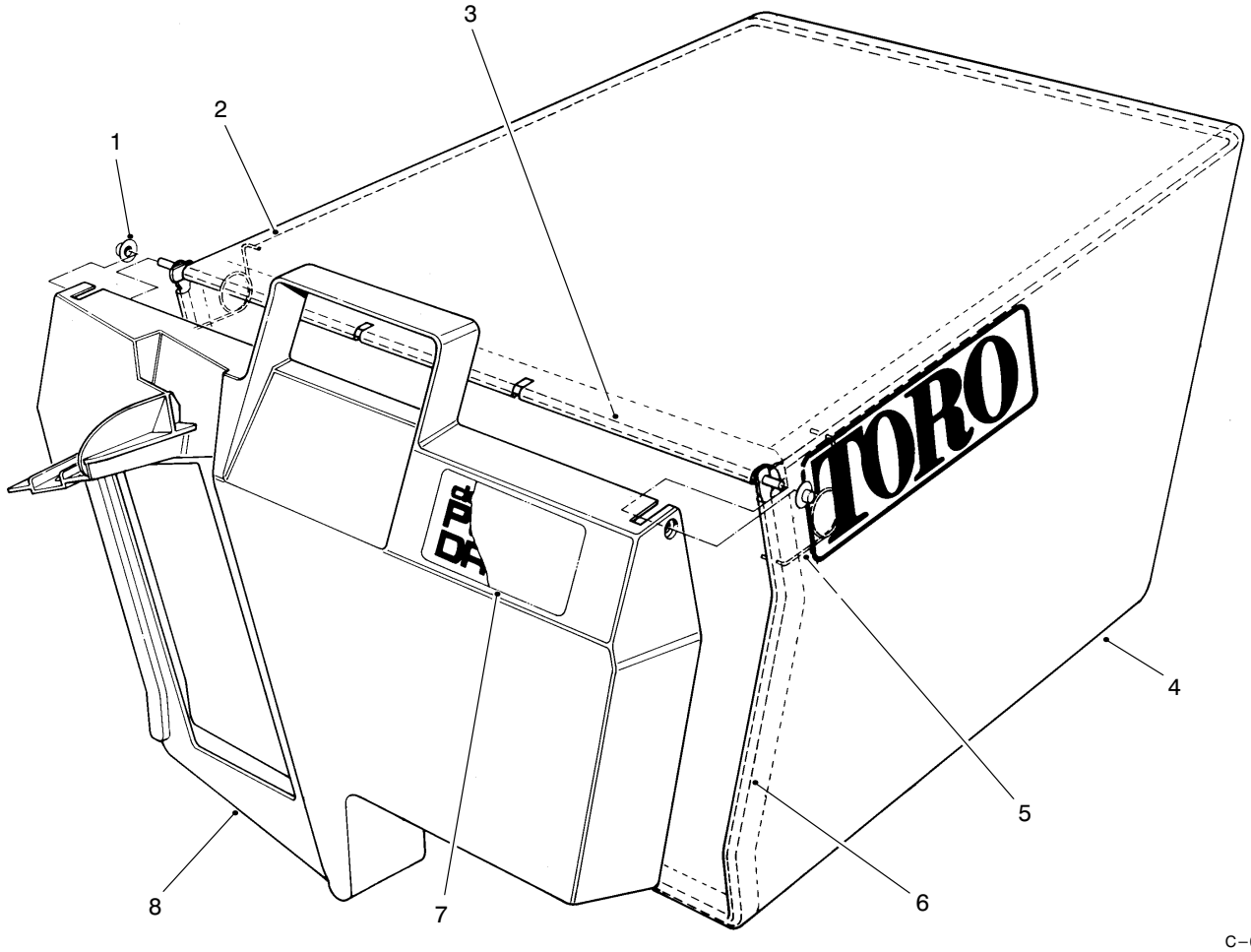

C−0331

BAG ASSEMBLY PART NO. 11−0189

Ref. No.	Part No.	Description	No. Used
1	3290−422	Nut − Push	2
2	42−4030	Frame − Upper Bag	1
3	33−4820	Hinge − Bag Door	1
4	8−2759	Bag − Grass	1

Ref. No.	Part No.	Description	No. Used
5	36−6910	Spring	2
6	42−4020	Frame − Bag	1
7	66−2150	Decal − Bag Door	1
8	37−1393	Door − Grass Bag	1

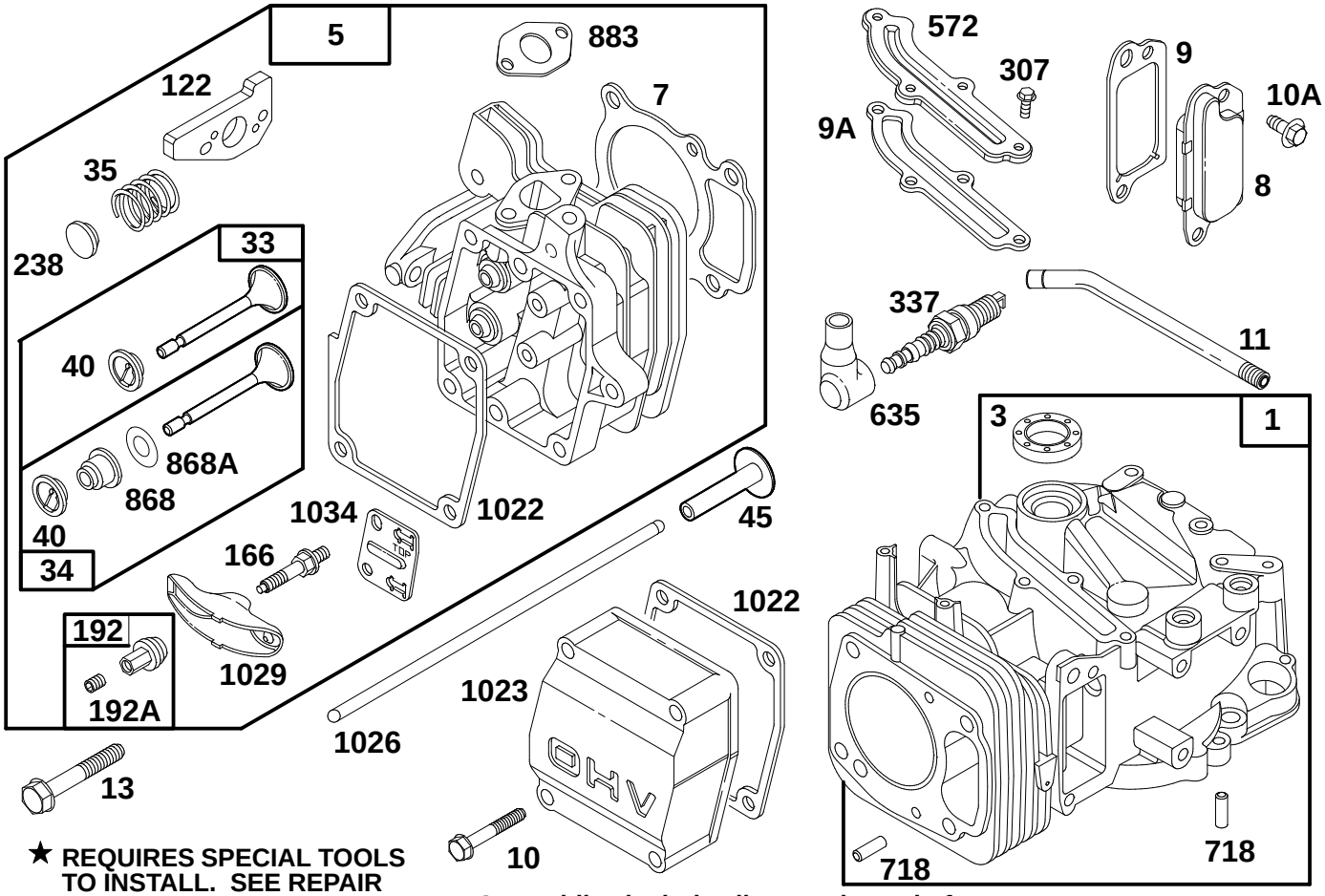

★ REQUIRES SPECIAL TOOLS TO INSTALL. SEE REPAIR INSTRUCTION MANUAL.

Assemblies include all parts shown in frames.

ENGINE GTS 150 (Model No. 20475 Only)

Ref. No.	Part No.	Description	No. Used
1	77−7590	Cylinder Assy	1
†3	77−9060	Seal − Oil	1
5	77−7730	Head − Cylinder	1
†7	77−7740	Gasket − Cylinder Head	1
8	77−9300	Breather Assy	1
†9	77−9250	Gasket − Breather	1
†9A	77−7410	Gasket − Breather	1
10	77−7360	Screw − Hex Head (Valve Cover)	1
10A	77−9200	Screw − Hex Head	1
11	77−9410	Tube − Breather	1
13	77−7630	Screw − Cylinder Head	1
33	77−7860	Valve − Exhaust	1
34	77−7880	Valve − Intake	1
35	77−7810	Spring − Valve	1
40	77−7870	Retainer − Spring	1
45	77−7610	Tappet − Valve	1
‡122	77−7820	Adapter Assy	1
166	77−7780	Stud − Rocker Arm	1

Ref. No.	Part No.	Description	No. Used
192	77−7910	Ball & Screw − Rocker Arm	1
192A	77−9310	Screw − Set	1
238	77−7800	Cap − Valve	1
307	77−7420	Screw − Cover Mtg (Breather Cover)	1
337	77−7330	Plug − Spark	1
572	77−7400	Cover − Breather	1
635	77−7340	Elbow − Spark Plug	1
718	77−7600	Pin − Dowel	1
†868	77−7890	Seal Assy − Valve	1
†868A	77−7900	Gasket − Valve	1
†883	77−7760	Gasket − Exhaust	1
†1022	77−7320	Gasket − Rocker Cover	1
1023	77−9320	Cover − Valve	1
1026	77−7620	Rod − Push	1
1029	77−7790	Arm − Rocker	1
1034	77−7770	Guide − Push Rod	1

† Included in Gasket Set − Part No. 77−8900

‡Included in Carburetor Overhaul Kit − Part No. 77−9580

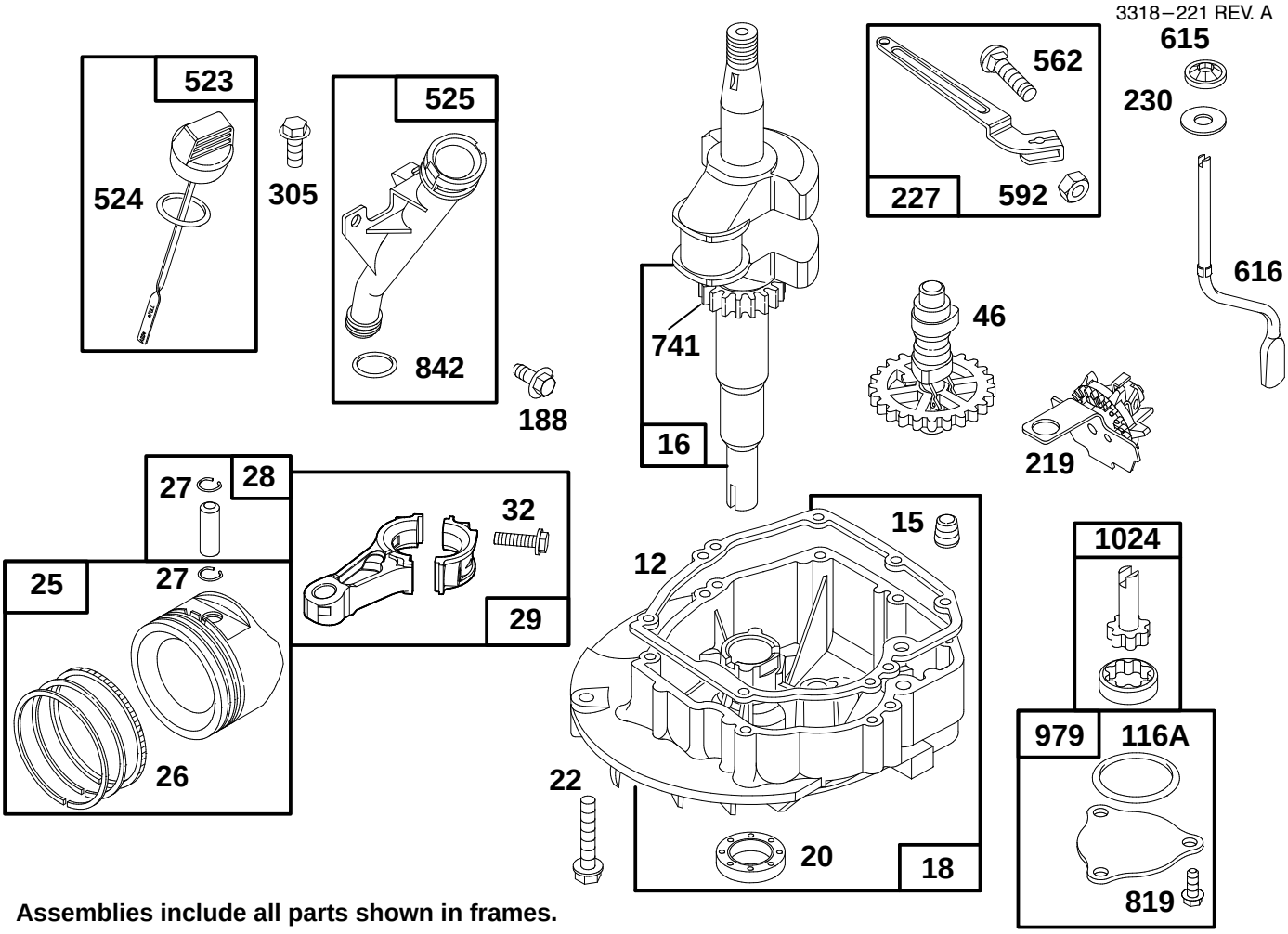

Assemblies include all parts shown in frames.

ENGINE GTS 150 (Model No. 20475 Only)

Ref. No.	Part No.	Description	No. Used
†12	77−7550	Gasket − Engine Base	1
15	77−9240	Plug − Pipe	1
16	77−7510	Crankshaft	
		Note: Order Part No. 77−7540 For Timing Gear Key	1
18	77−7560	Base − Engine	1
†20	77−7570	Seal − Oil	1
22	77−9070	Screw − Engine Base	1
25	77−7690	Piston Assy (Std.)	1
26	77−7700	Ring Set (Std.)	1
27	77−7710	Lock − Piston Pin	1
28	77−9340	Pin Assembly − Piston	1
29	77−7670	Rod − Connecting	1
32	77−7680	Screw − Connecting Rod	1
46	77−7490	Gear − Cam	1
†116A	77−7660	O−Ring	1
188	77−9360	Screw − Hex Head	1

Ref. No.	Part No.	Description	No. Used
219	77−7500	Gear − Governor	1
227	77−7370	Lever Assembly − Governor	1
230	77−7470	Washer	1
305	77−8310	Screw − Hex Head	1
523	77−7260	Dipstick − Oil	1
†524	77−7270	Seal − O−Ring	1
525	77−7280	Tube − Oil Fill	1
562	77−7380	Bolt − Governor Lever	1
592	77−7390	Nut − Hex	1
615	77−7480	Push Nut	1
616	77−7460	Crank − Governor	1
741	77−7530	Gear − Timing	1
†842	77−7300	Seal − O−Ring	1
819	77−7450	Screw − Cap	1
979	77−7650	Cover − Oil Pump	1
1024	77−7640	Pump − Oil	1

† Included in Gasket Set − Part No. 77−8900

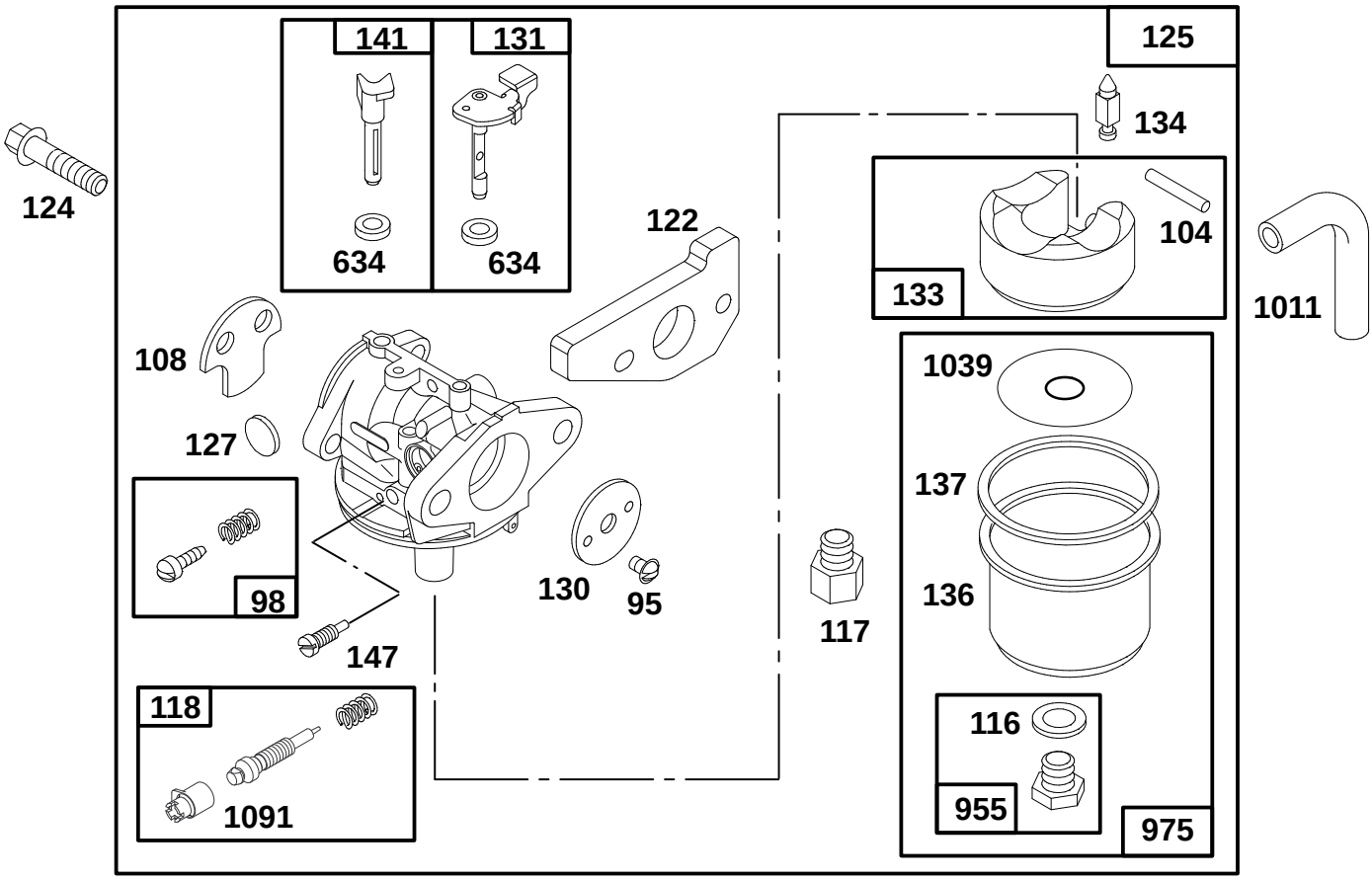

Assemblies include all parts shown in frames.

ENGINE GTS 150 (Model No. 20475 Only)

Ref. No.	Part No.	Description	No. Used
95	77−8090	Screw − Valve Mtg	1
98	77−8240	Screw − Idle Adj.	1
‡104	77−8180	Pin − Float Hinge	1
108	77−9600	Valve − Choke	1
‡*116	77−8210	Gasket − Sealing	1
‡117	77−9610	Jet − Main	1
		Note: For High Altitude Jet, Order Part No. 94−1650	1
‡118	77−9620	Valve & Spring − Needle	1
‡122	77−7820	Adapter Assy	1
124	77−7970	Screw − Hex Head (Carb. Mtg.)	1
125	77−9630	Carburetor Assy	1
‡127	94−1651	Plug − Welch	1

Ref. No.	Part No.	Description	No. Used
130	77−8080	Valve − Throttle	1
131	77−8160	Shaft − Throttle	1
133	77−8170	Float − Carburetor	1
‡134	77−8110	Valve − Inlet (Includes Seat)	1
136	77−7240	Bowl − Fuel	1
‡*137	77−8200	Gasket − Float Bowl	1
141	77−8130	Shaft − Choke	1
147	77−9640	Jet − Pilot	1
*634	77−8150	Washer − Seal	1
955	77−8220	Screw − Hex Head	1
975	77−8190	Bowl Assy − Carburetor	1
1011	77−8040	Tube − Vent	1
‡1039	77−7250	Limiter − Float	1
‡1091	77−9650	Cap − Limiter	1

‡ Included in Gasket Set − Part No. 77−9580

* Included in Gasket Set − Part No. 77−8930

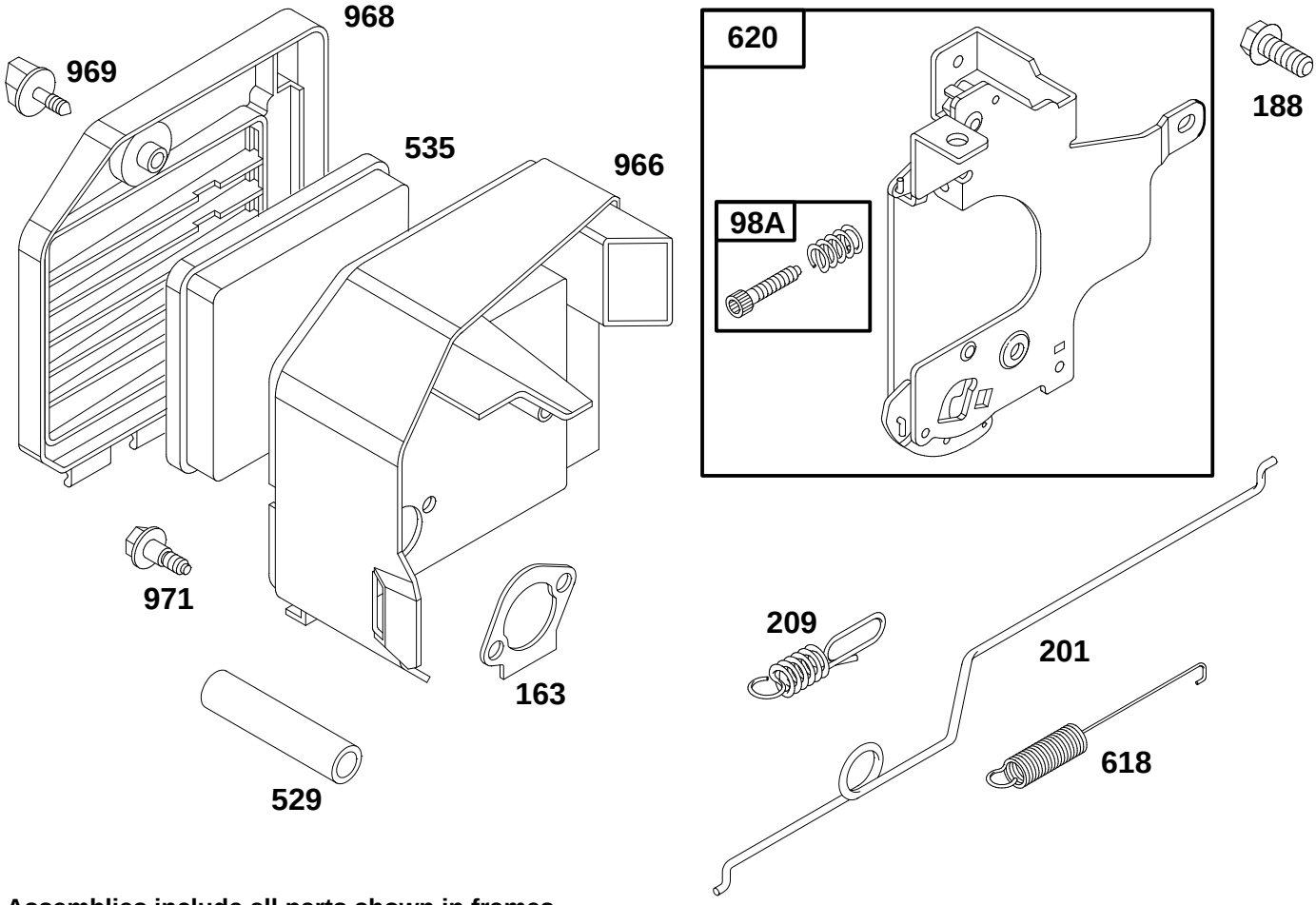

Assemblies include all parts shown in frames.

ENGINE GTS 150 (Model No. 20475 Only)

Ref. No.	Part No.	Description	No. Used
98A	77−8020	Screw Assy − Speed Adj.	1
†163	77−7960	Gasket − Air Cleaner	1
188	77−9360	Screw − Hex Head	1
201	77−7980	Link − Governor	1
209	77−7990	Spring − Governor	1
529	77−8030	Tube − Breather	1
535	77−7950	Element − Filter	1

Ref. No.	Part No.	Description	No. Used
618	77−8140	Spring − Choke	1
620	77−8000	Bracket − Carburetor	1
966	77−7940	Base − Air Cleaner	1
968	77−7040	Cover − Air Cleaner	1
969	77−7920	Screw − Air Cleaner	1
971	77−7930	Screw − Air Cleaner	1

† Included in Gasket Set − Part No. 77−8900

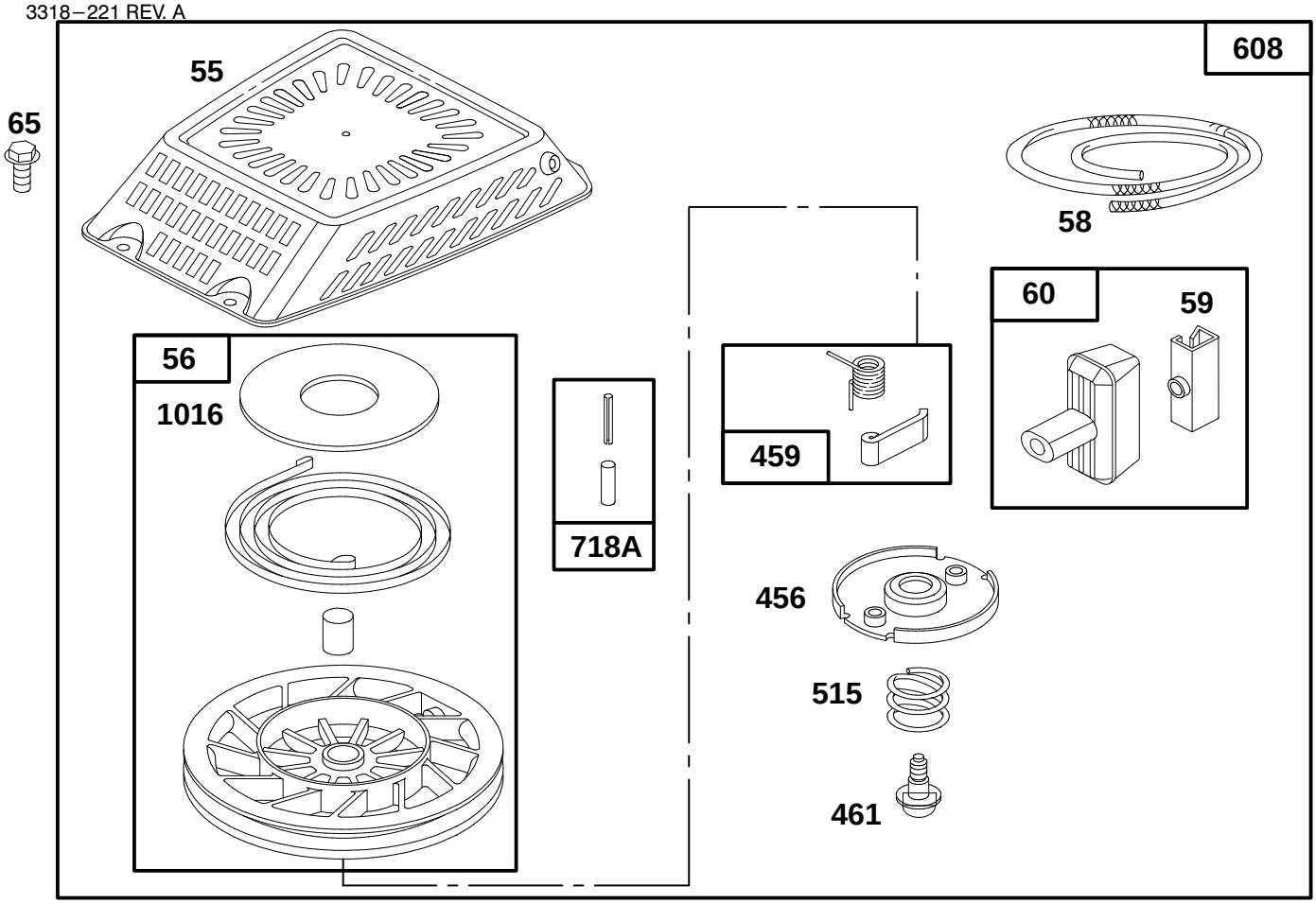

Assemblies include all parts shown in frames.

ENGINE GTS 150 (Model No. 20475 Only)

Ref. No.	Part No.	Description	No. Used
55	77−8460	Housing − Rewind Starter	1
56	77−9270	Pulley − Rewind Starter	1
58	77−8480	Rope − Starter (Cut To Suit)	1
59	77−7210	Insert − Rewind Handle	1
60	77−8510	Handle − Rewind Starter	1
65	77−8300	Screw − Hex Head	1
456	77−8470	Retainer − Rewind Starter	1
459	77−8530	Pawl − Starter	1
461	77−8490	Screw − Rewind Starter	1
515	77−8500	Spring − Torsion	1
608	77−8450	Starter Assy − Rewind	1

Ref. No.	Part No.	Description	No. Used
718A	77−8550	Pin − Spring	1
1016	77−8570	Cover − Spring	1
		Model No. 20475−6900001 & Up may have been assembled with Starter Ass'y No. 77−8450 or 94−1678. Part identification will be required for service part replacement.	

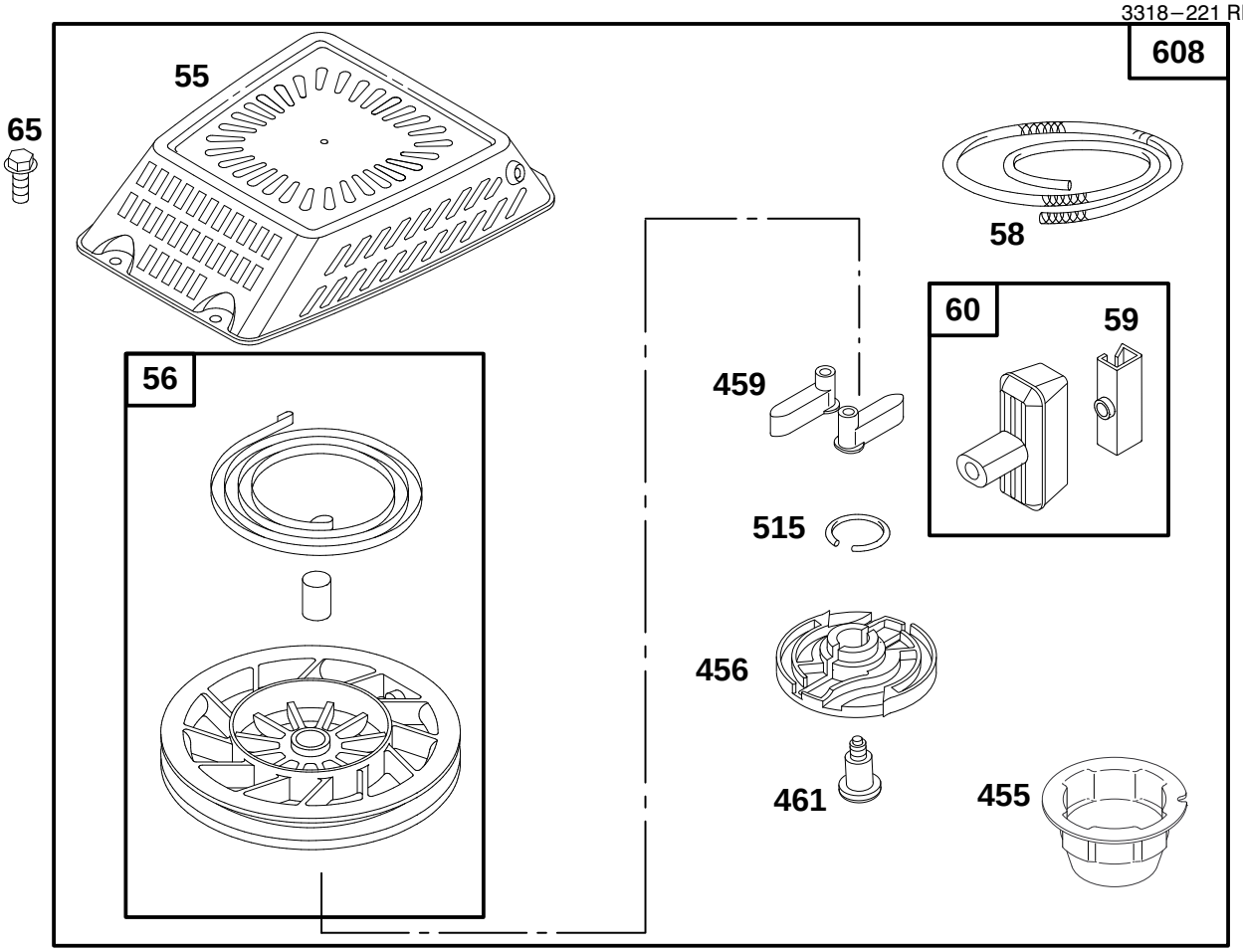

Assemblies include all parts shown in frames.

ENGINE GTS 150 (Model No. 20475 Only)

Ref. No.	Part No.	Description	No. Used
55	94–1656	Housing–Rewind Starter	1
56	94–1657	Pulley–Rewind Starter	1
58	94–1668	Rope–Starter (Cut To Suit)	1
59	77–7210	Insert–Rewind Handle	1
60	77–8520	Handle–Rewind Starter	1
65	77–8300	Screw–Hex Head	1
455	94–1653	Cup – Starter	1
456	94–1659	Retainer–Rewind Starter	1
459	94–1654	Pawl–Starter	1
461	94–1660	Screw–Rewind Starter	1
515	94–1655	Spring–Torsion	1

Ref. No.	Part No.	Description	No. Used
608	94–1678	Starter Assy–Rewind Model No. 20475–6900001 & Up may have been assembled with Starter Ass'y No. 77–8450 or 94–1678. Part identification will be required for service part replacement.	1

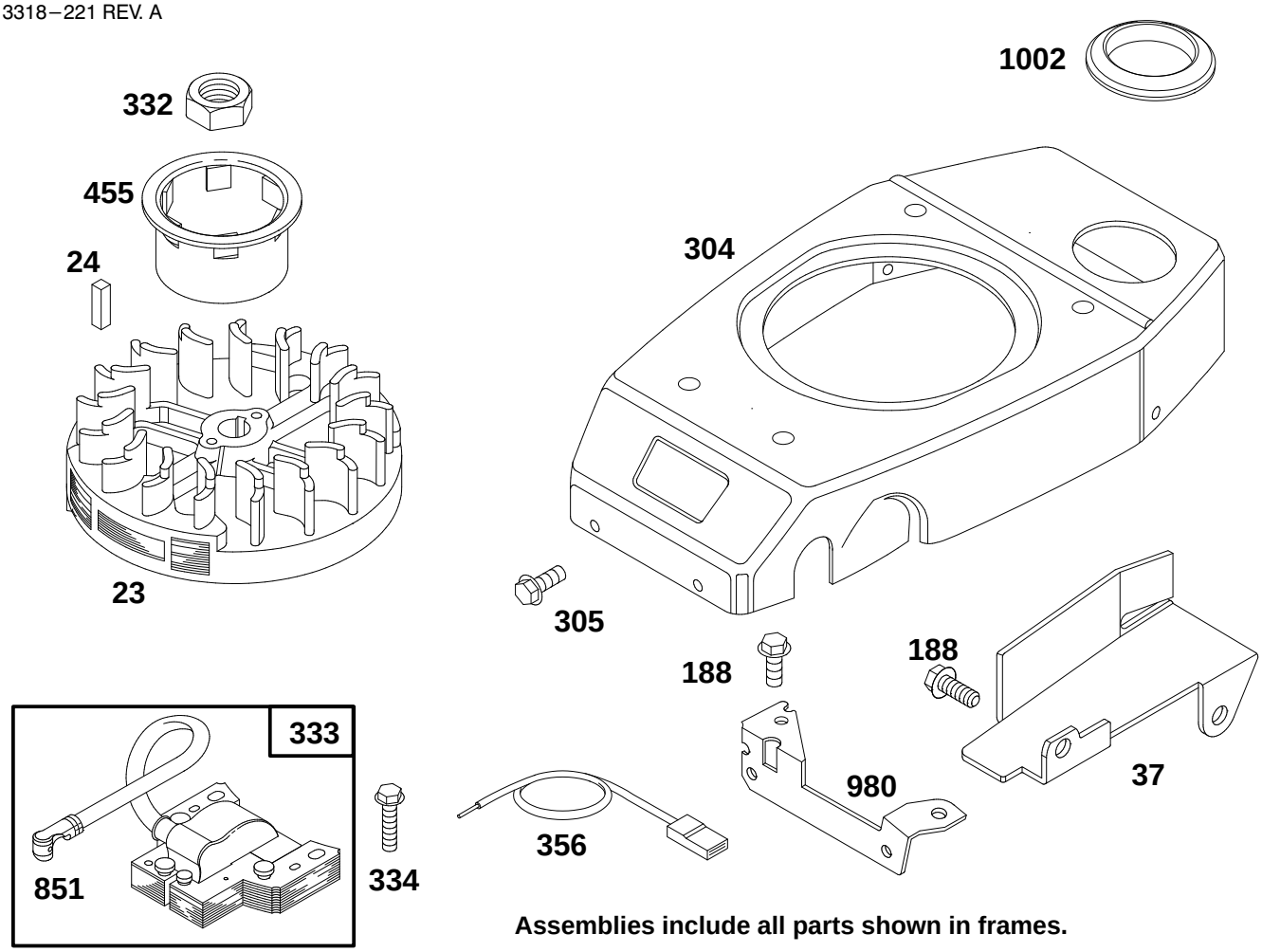

Assemblies include all parts shown in frames.

ENGINE GTS 150 (Model No. 20475 Only)

Ref. No.	Part No.	Description	No. Used
23	77−8330	Flywheel − Magneto	1
24	77−8340	Key − Flywheel	1
37	77−7190	Guard − Flywheel	1
188	77−9360	Screw − Hex Head	1
304	77−8270	Housing − Blower	1
305	77−8310	Screw − Hex Head	1
332	77−8360	Nut − Flywheel	1

Ref. No.	Part No.	Description	No. Used
333	77−8420	Armature − Magneto	1
334	77−9420	Screw − Armature Mtg.	1
356	77−8400	Wire − Ground	1
455	77−8350	Cup − Starter	1
851	77−8430	Terminal − Spark Plug	1
980	77−7140	Bracket − Blower Housing	1
1002	77−7180	Grommet	1

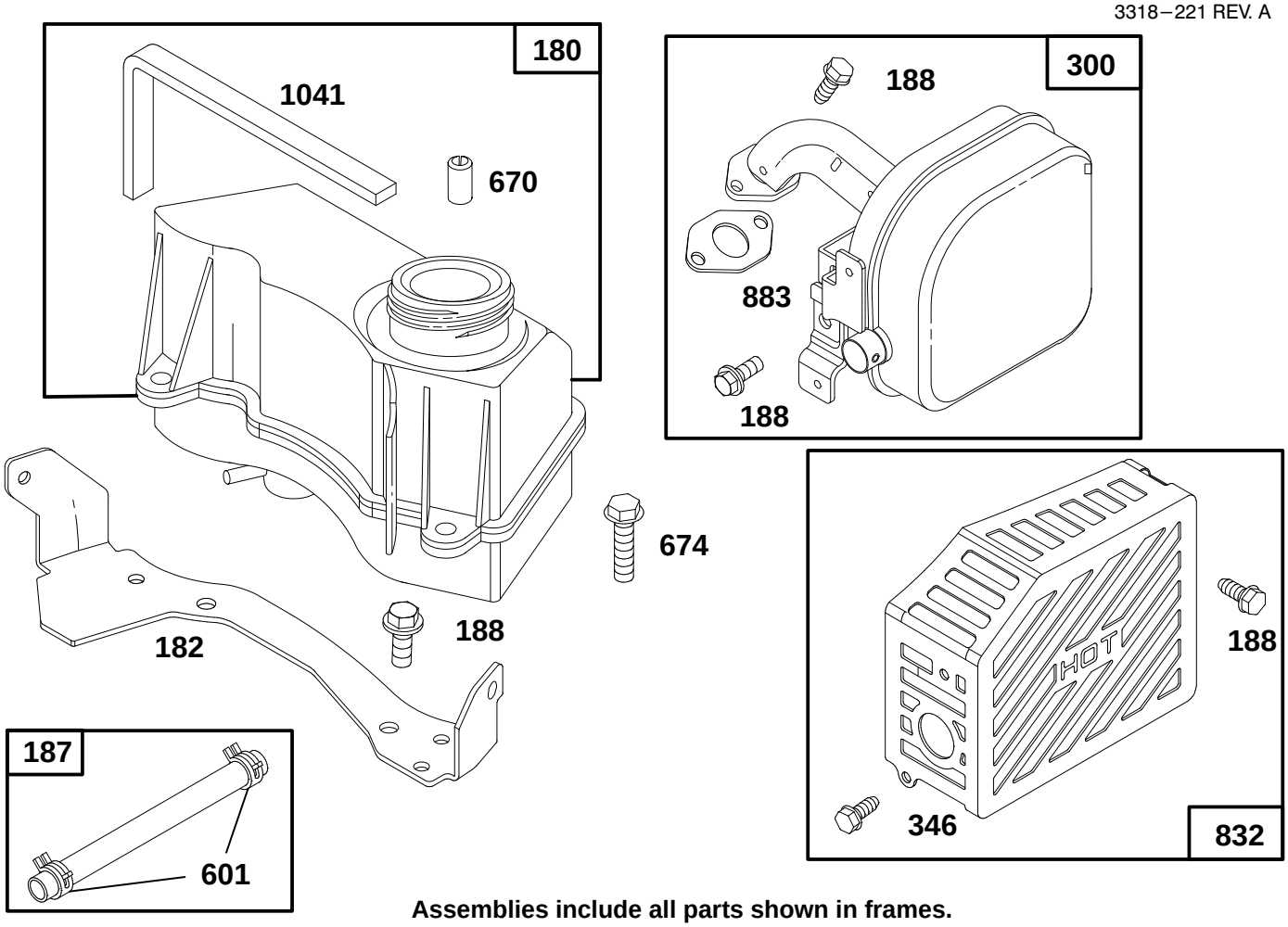

Assemblies include all parts shown in frames.

ENGINE GTS 150 (Model No. 20475 Only)

Ref. No.	Part No.	Description	No. Used
180	77−8580	Tank Assy − Fuel	1
182	77−7170	Bracket − Fuel Tank	1
187	78−4100	Hose − Fuel (Cut To Suit)	1
188	77−9360	Screw − Cap	1
300	77−8640	Muffler − Exhaust	1
346	77−9430	Screw − Hex Head	1

Ref. No.	Part No.	Description	No. Used
601	78−4690	Clamp − Hose	1
670	77−9030	Spacer − Fuel Tank	1
674	77−8600	Screw − Tank Mtg.	1
†832	77−9290	Guard − Muffler	1
†1041	77−8590	Seal − Foam	1

† Included in Gasket Set − Part No. 77−8900

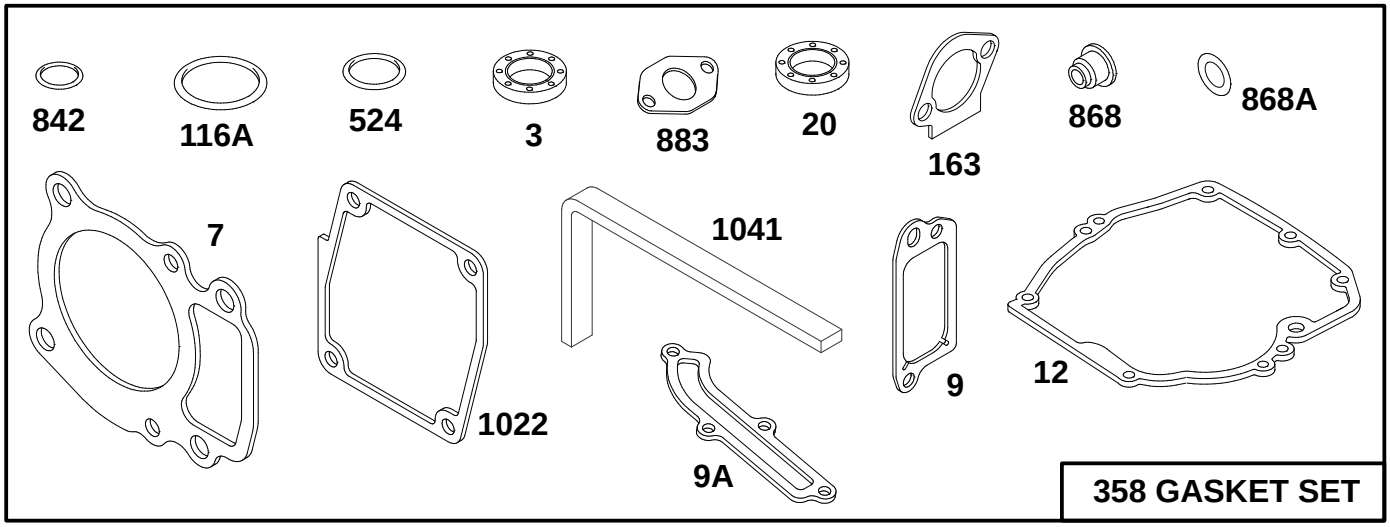

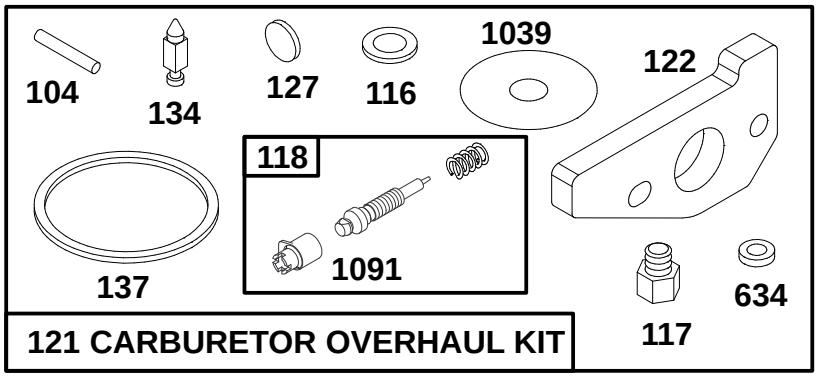

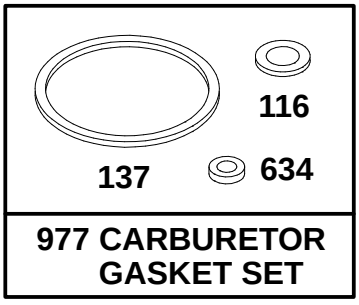

Assemblies include all parts shown in frames.

ENGINE GTS 150 (Model No. 20475 Only)

Ref. No.	Part No.	Description	No. Used
†3	77−9060	Seal − Oil (Upper)	1
†7	77−7740	Gasket − Cylinder Head	1
†9	77−9250	Gasket − Breather	1
†9A	77−7410	Gasket − Breather Cover	1
†12	77−7550	Gasket − Engine Base	1
†20	77−7570	Seal − Oil (Lower)	1
‡104	77−8180	Pin − Float Hinge	1
‡*116	77−8210	Washer − Bowl	1
†116A	77−7660	Seal − O−Ring	1
‡117	77−9610	Jet − Main	1
‡118	77−9620	Valve & Spring − Needle	1
121	77−9580	Overhaul Kit − Carburetor	1
‡122	77−7820	Adapter Assy	1
‡127	94−1651	Plug − Welch	1
‡134	77−8110	Valve − Inlet (Includes Seat)	1

Ref. No.	Part No.	Description	No. Used
‡*137	77−8200	Gasket − Float Bowl	1
†163	77−7960	Gasket − Air Cleaner	1
358	77−8900	Gasket Set	1
†524	77−7270	Seal − O−Ring (Oil Fill Cap)	1
*634	77−8150	Washer − Seal	1
†842	77−7300	Seal − O−Ring (Oil Fill Tube)	1
†868	77−7890	Seal Assy − Valve	1
†868A	77−7900	Seal − Valve	1
†883	77−7760	Gasket − Exhaust	1
977	77−8930	Carburetor Gasket Set	1
†1022	77−7320	Gasket − Rocker Cover	1
‡1039	77−7250	Limiter − Float	1
†1041	77−8590	Seal − Foam (Fuel Tank)	1
‡1091	77−9650	Cap − Limiter	1

‡ Incl. in Carburetor Overhaul Kit − Part No. 77−9580
*Incl. in Carburetor Gasket Set − Part No. 77−8930

† Included in Gasket Set − Part No. 77−8900

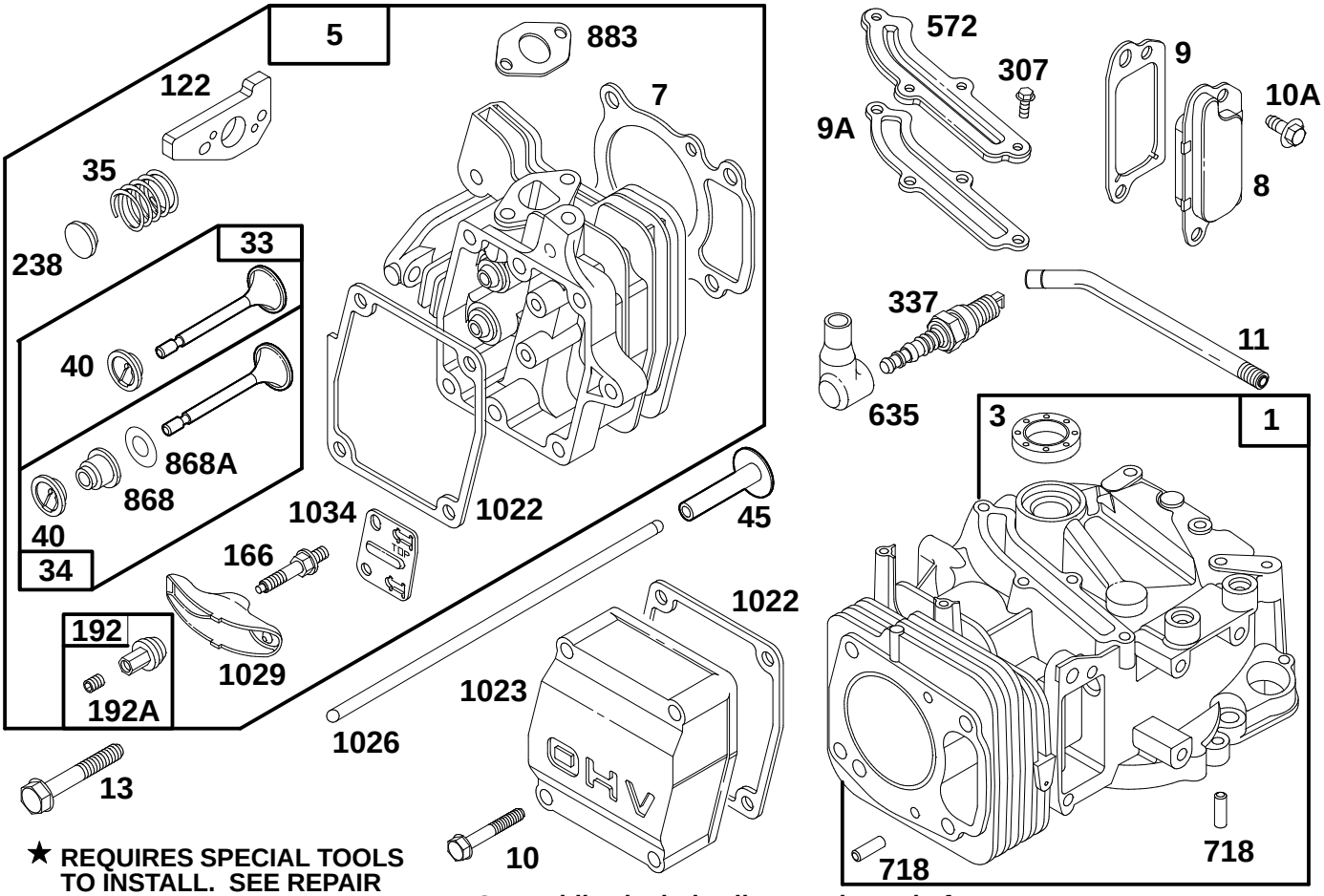

★ REQUIRES SPECIAL TOOLS TO INSTALL. SEE REPAIR INSTRUCTION MANUAL.

Assemblies include all parts shown in frames.

ENGINE GTS 150 (Model No. 20476 Only)

Ref. No.	Part No.	Description	No. Used
1	77−7590	Cylinder Assy	1
†3	77−9060	Seal − Oil	1
5	77−7730	Head − Cylinder	1
†7	77−7740	Gasket − Cylinder Head	1
8	77−9300	Breather Assy	1
†9	77−9250	Gasket − Breather	1
†9A	77−7410	Gasket − Breather	1
10	77−7360	Screw − Hex Head (Valve Cover)	1
10A	77−9200	Screw − Hex Head	1
11	77−9410	Tube − Breather	1
13	77−7630	Screw − Cylinder Head	1
33	77−7860	Valve − Exhaust	1
34	77−7880	Valve − Intake	1
35	77−7810	Spring − Valve	1
40	77−7870	Retainer − Spring	1
45	77−7610	Tappet − Valve	1
‡122	77−7820	Adapter Assy	1
166	77−7780	Stud − Rocker Arm	1

Ref. No.	Part No.	Description	No. Used
192	77−7910	Ball & Screw − Rocker Arm	1
192A	77−9310	Screw − Set	1
238	77−7800	Cap − Valve	1
307	77−7420	Screw − Cover Mtg (Breather Cover)	1
337	77−7330	Plug − Spark	1
572	77−7400	Cover − Breather	1
635	77−7340	Elbow − Spark Plug	1
718	77−7600	Pin − Dowel	1
†868	77−7890	Seal Assy − Valve	1
†868A	77−7900	Gasket − Valve	1
†883	77−7760	Gasket − Exhaust	1
†1022	77−7320	Gasket − Rocker Cover	1
1023	77−9320	Cover − Valve	1
1026	77−7620	Rod − Push	1
1029	77−7790	Arm − Rocker	1
1034	77−7770	Guide − Push Rod	1

† Included in Gasket Set − Part No. 77−8900
‡Included in Carburetor Overhaul Kit − Part No. 77−9580

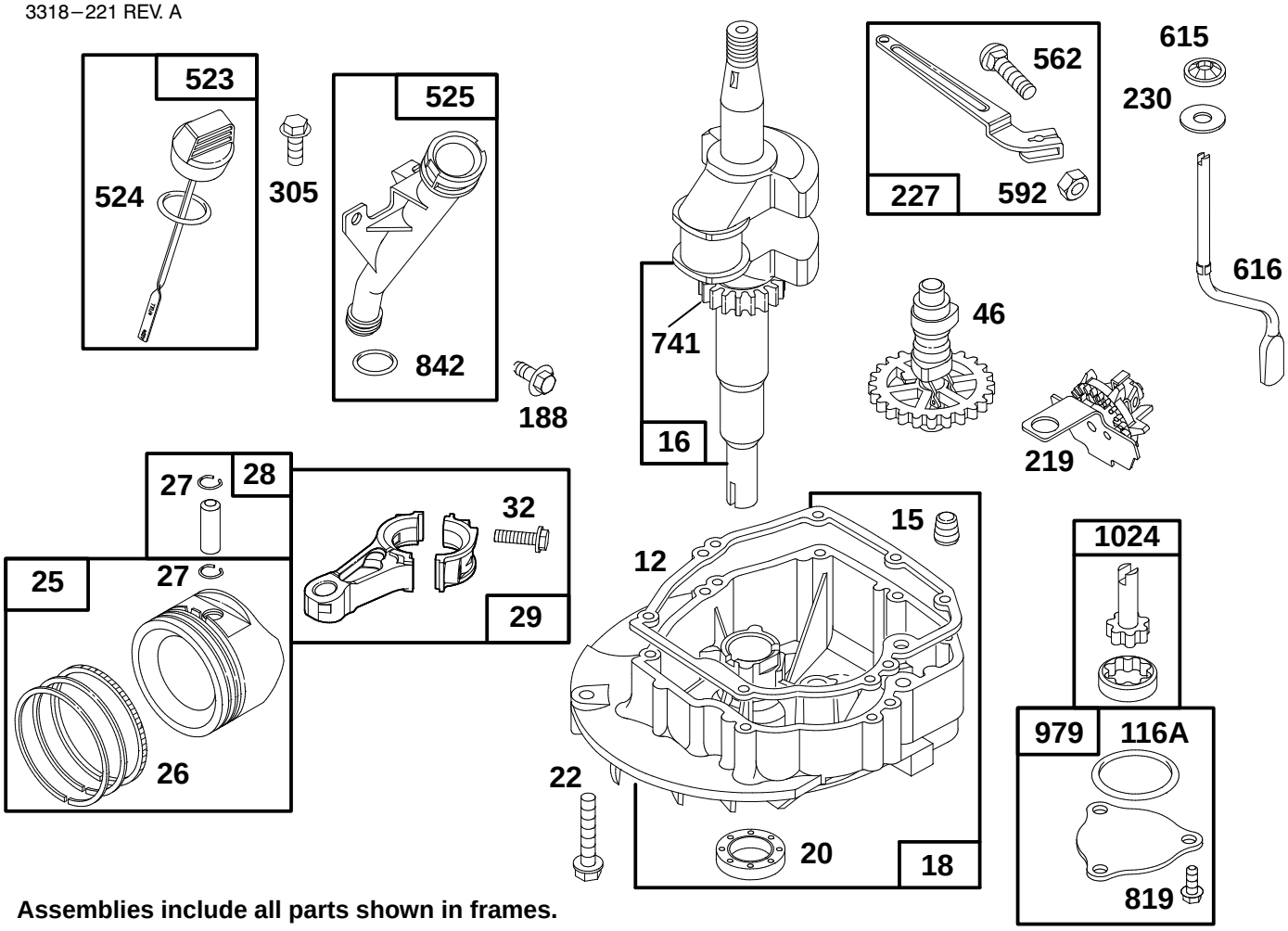

Assemblies include all parts shown in frames.

ENGINE GTS 150 (Model No. 20476 Only)

Ref. No.	Part No.	Description	No. Used
†12	77−7550	Gasket − Engine Base	1
15	77−9240	Plug − Pipe	1
16	77−7510	Crankshaft	
		Note: Order Part No. 77−7540 For Timing Gear Key	1
18	77−7560	Base − Engine	1
†20	77−7570	Seal − Oil	1
22	77−9070	Screw − Engine Base	1
25	77−7690	Piston Assy (Std.)	1
26	77−7700	Ring Set (Std.)	1
27	77−7710	Lock − Piston Pin	1
28	77−9340	Pin Assembly − Piston	1
29	77−7670	Rod − Connecting	1
32	77−7680	Screw − Connecting Rod	1
46	77−7490	Gear − Cam	1
†116A	77−7660	O−Ring	1
188	77−9360	Screw − Hex Head	1

Ref. No.	Part No.	Description	No. Used
219	77−7500	Gear − Governor	1
227	77−7370	Lever Assembly − Governor	1
230	77−7470	Washer	1
305	77−8310	Screw − Hex Head	1
523	77−7260	Dipstick − Oil	1
†524	77−7270	Seal − O−Ring	1
525	77−7280	Tube − Oil Fill	1
562	77−7380	Bolt − Governor Lever	1
592	77−7390	Nut − Hex	1
615	77−7480	Push Nut	1
616	77−7460	Crank − Governor	1
741	77−7530	Gear − Timing	1
†842	77−7300	Seal − O−Ring	1
819	77−7450	Screw − Cap	1
979	77−7650	Cover − Oil Pump	1
1024	77−7640	Pump − Oil	1

† Included in Gasket Set − Part No. 77−8900

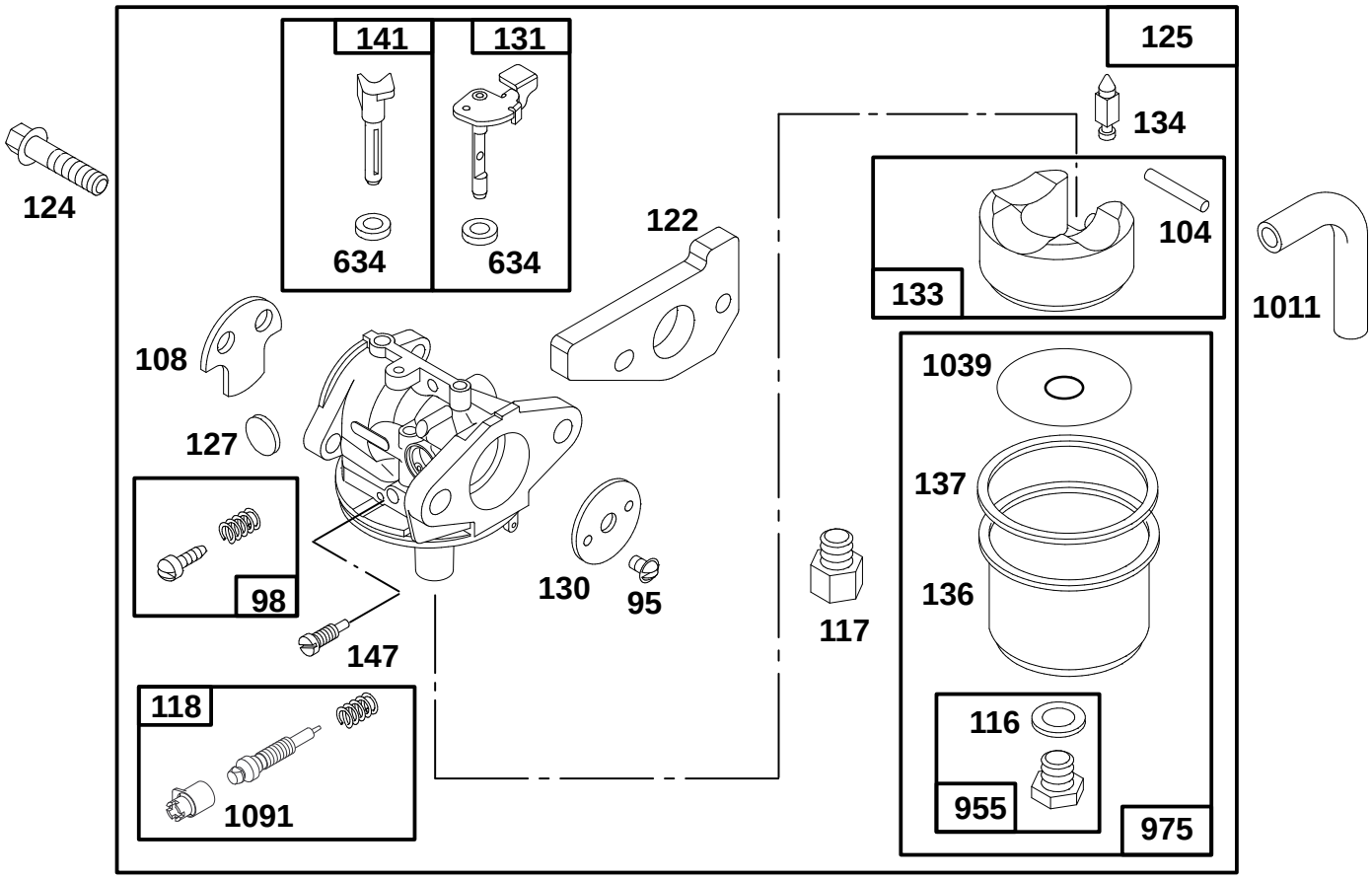

Assemblies include all parts shown in frames.

ENGINE GTS 150 (Model No. 20476 Only)

Ref. No.	Part No.	Description	No. Used
95	77−8090	Screw − Valve Mtg	1
98	77−8240	Screw − Idle Adj.	1
‡104	77−8180	Pin − Float Hinge	1
108	77−9600	Valve − Choke	1
‡*116	77−8210	Gasket − Sealing	1
‡117	77−9610	Jet − Main	1
		Note: For High Altitude Jet, Order Part No. 94−1650	1
‡118	77−9620	Valve & Spring − Needle	1
‡122	77−7820	Adapter Assy	1
124	77−7970	Screw − Hex Head (Carb. Mtg.)	1
125	77−9630	Carburetor Assy	1
‡127	94−1651	Plug − Welch	1

Ref. No.	Part No.	Description	No. Used
130	77−8080	Valve − Throttle	1
131	77−8160	Shaft − Throttle	1
133	77−8170	Float − Carburetor	1
‡134	77−8110	Valve − Inlet (Includes Seat)	1
136	77−7240	Bowl − Fuel	1
‡*137	77−8200	Gasket − Float Bowl	1
141	77−8130	Shaft − Choke	1
147	77−9640	Jet − Pilot	1
*634	77−8150	Washer − Seal	1
955	77−8220	Screw − Hex Head	1
975	77−8190	Bowl Assy − Carburetor	1
1011	77−8040	Tube − Vent	1
‡1039	77−7250	Limiter − Float	1
‡1091	77−9650	Cap − Limiter	1

‡ Included in Gasket Set − Part No. 77−9580
* Included in Gasket Set − Part No. 77−8930

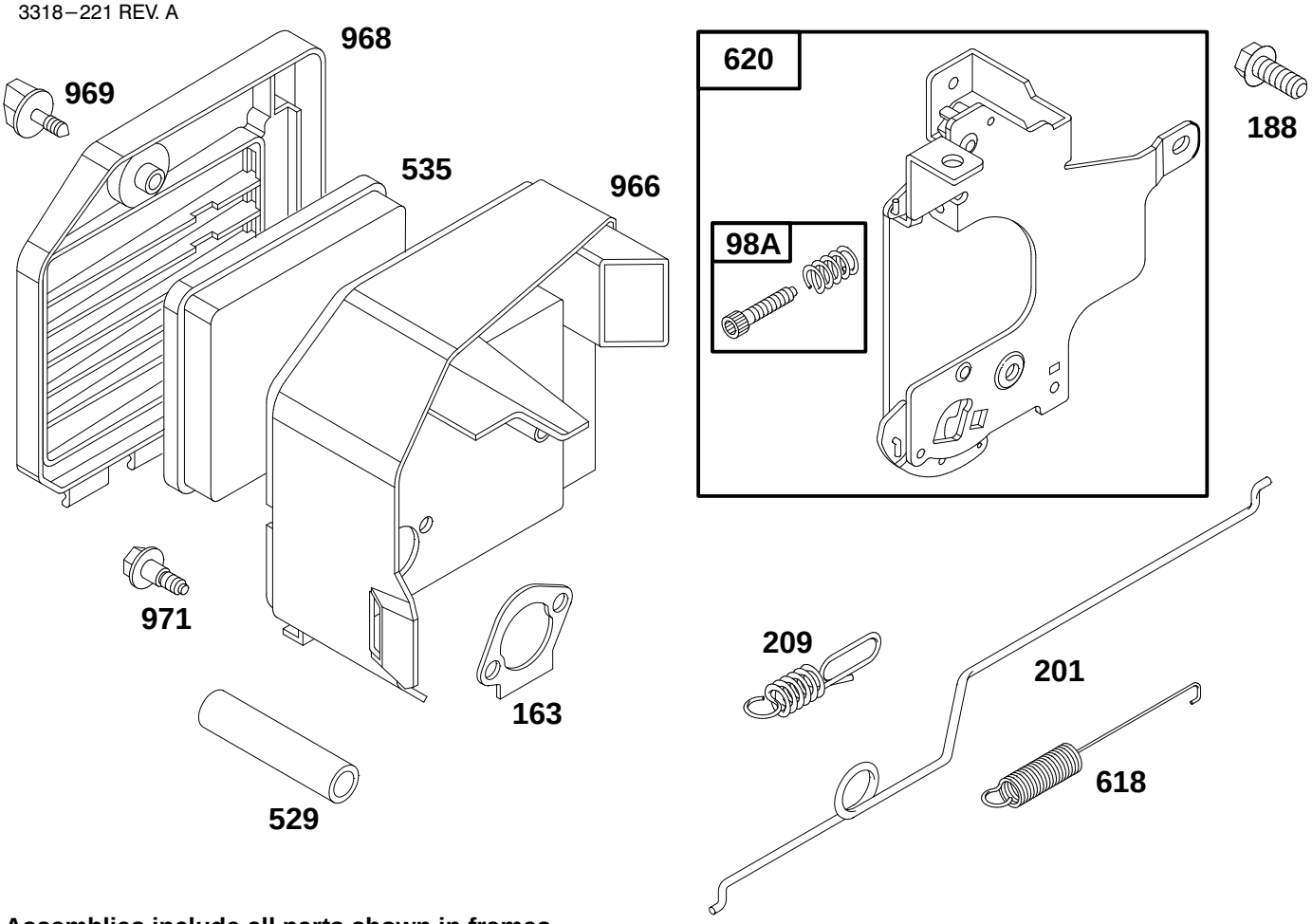

Assemblies include all parts shown in frames.

ENGINE GTS 150 (Model No. 20476 Only)

Ref. No.	Part No.	Description	No. Used
98A	77−8020	Screw Assy − Speed Adj.	1
†163	77−7960	Gasket − Air Cleaner	1
188	77−9360	Screw − Hex Head	1
201	77−7980	Link − Governor	1
209	77−7990	Spring − Governor	1
529	77−9470	Tube − Breather	1
535	77−7950	Element − Filter	1

Ref. No.	Part No.	Description	No. Used
618	77−8140	Spring − Choke	1
620	77−8000	Bracket − Carburetor	1
966	77−7940	Base − Air Cleaner	1
968	77−7040	Cover − Air Cleaner	1
969	77−7920	Screw − Air Cleaner	1
971	77−7930	Screw − Air Cleaner	1

† Included in Gasket Set − Part No. 77−8900

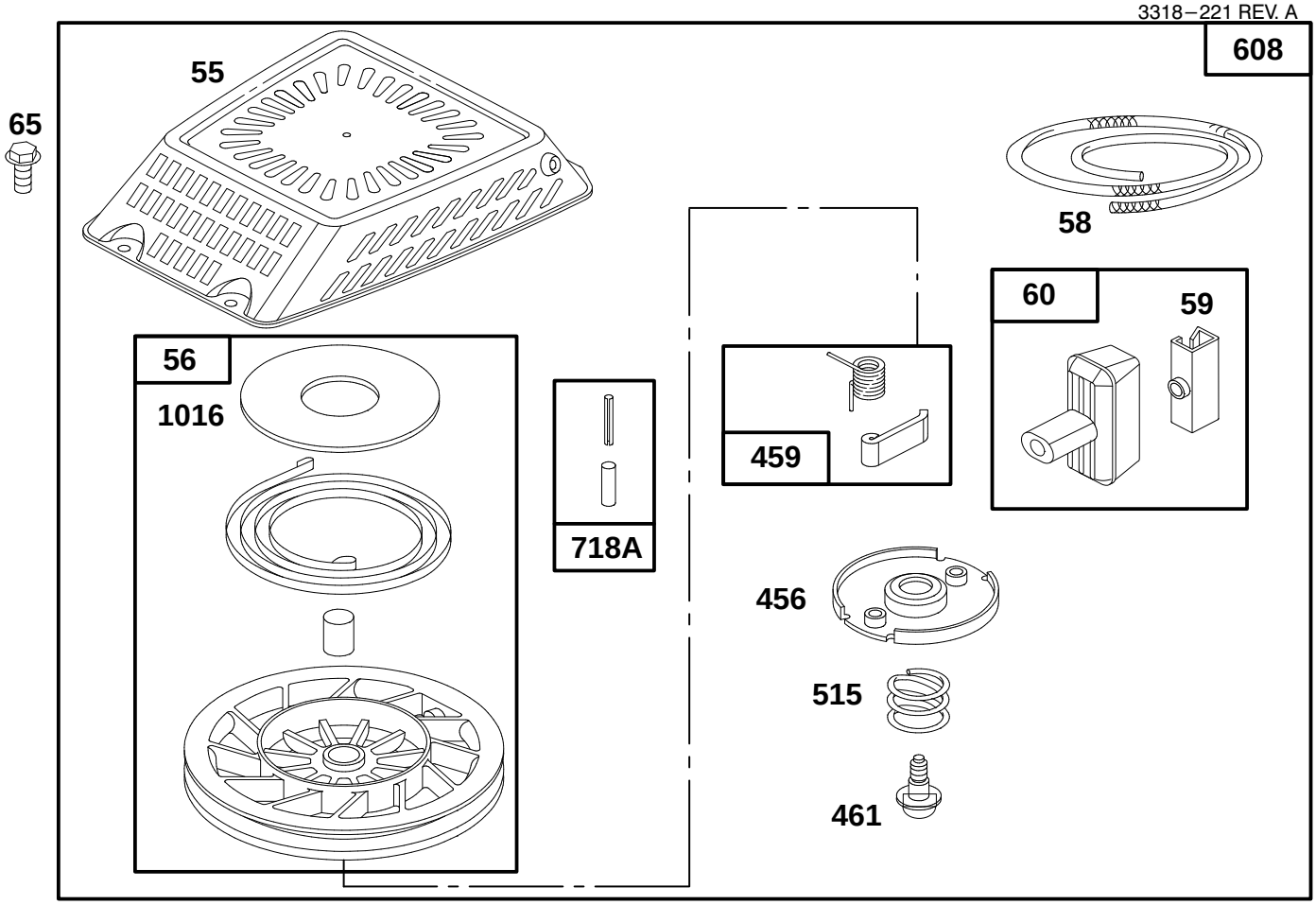

Assemblies include all parts shown in frames.

ENGINE GTS 150 (Model No. 20476 Only)

Ref. No.	Part No.	Description	No. Used
55	77−8460	Housing − Rewind Starter	1
56	77−9270	Pulley − Rewind Starter	1
58	77−8480	Rope − Starter (Cut To Suit)	1
59	77−7210	Insert − Rewind Handle	1
60	77−8510	Handle − Rewind Starter	1
65	77−8300	Screw − Hex Head	1
456	77−8470	Retainer − Rewind Starter	1
459	77−8530	Pawl − Starter	1
461	77−8490	Screw − Rewind Starter	1
515	77−8500	Spring − Torsion	1
608	77−8450	Starter Assy − Rewind	1

Ref. No.	Part No.	Description	No. Used
718A	77−8550	Pin − Spring	1
1016	77−8570	Cover − Spring	1
		Model No. 20476−6900001 & Up may have been assembled with Starter Ass'y No. 77−8450 or 94−1678. Part identification will be required for service part replacement.	

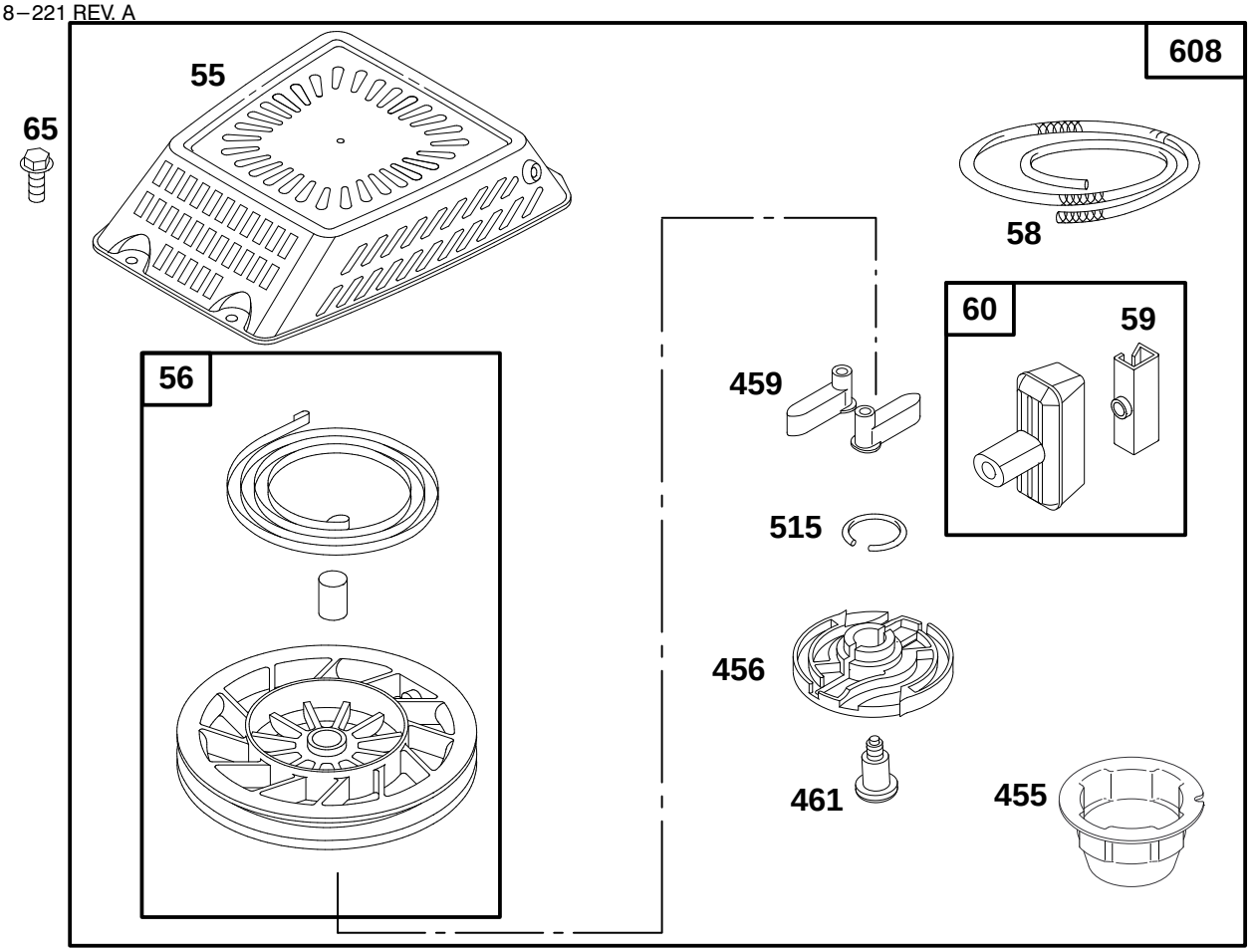

Assemblies include all parts shown in frames.

ENGINE GTS 150 (Model No. 20476 Only)

Ref. No.	Part No.	Description	No. Used
55	94–1656	Housing–Rewind Starter	1
56	94–1657	Pulley–Rewind Starter	1
58	94–1668	Rope–Starter (Cut To Suit)	1
59	77–7210	Insert–Rewind Handle	1
60	77–8520	Handle–Rewind Starter	1
65	77–8300	Screw–Hex Head	1
455	94–1653	Cup – Starter	1
456	94–1659	Retainer–Rewind Starter	1
459	94–1654	Pawl–Starter	1
461	94–1660	Screw–Rewind Starter	1
515	94–1655	Spring–Torsion	1

Ref. No.	Part No.	Description	No. Used
608	94–1678	Starter Assy–Rewind Model No. 20476–6900001 & Up may have been assembled with Starter Ass'y No. 77–8450 or 94–1678. Part identification will be required for service part replacement.	1

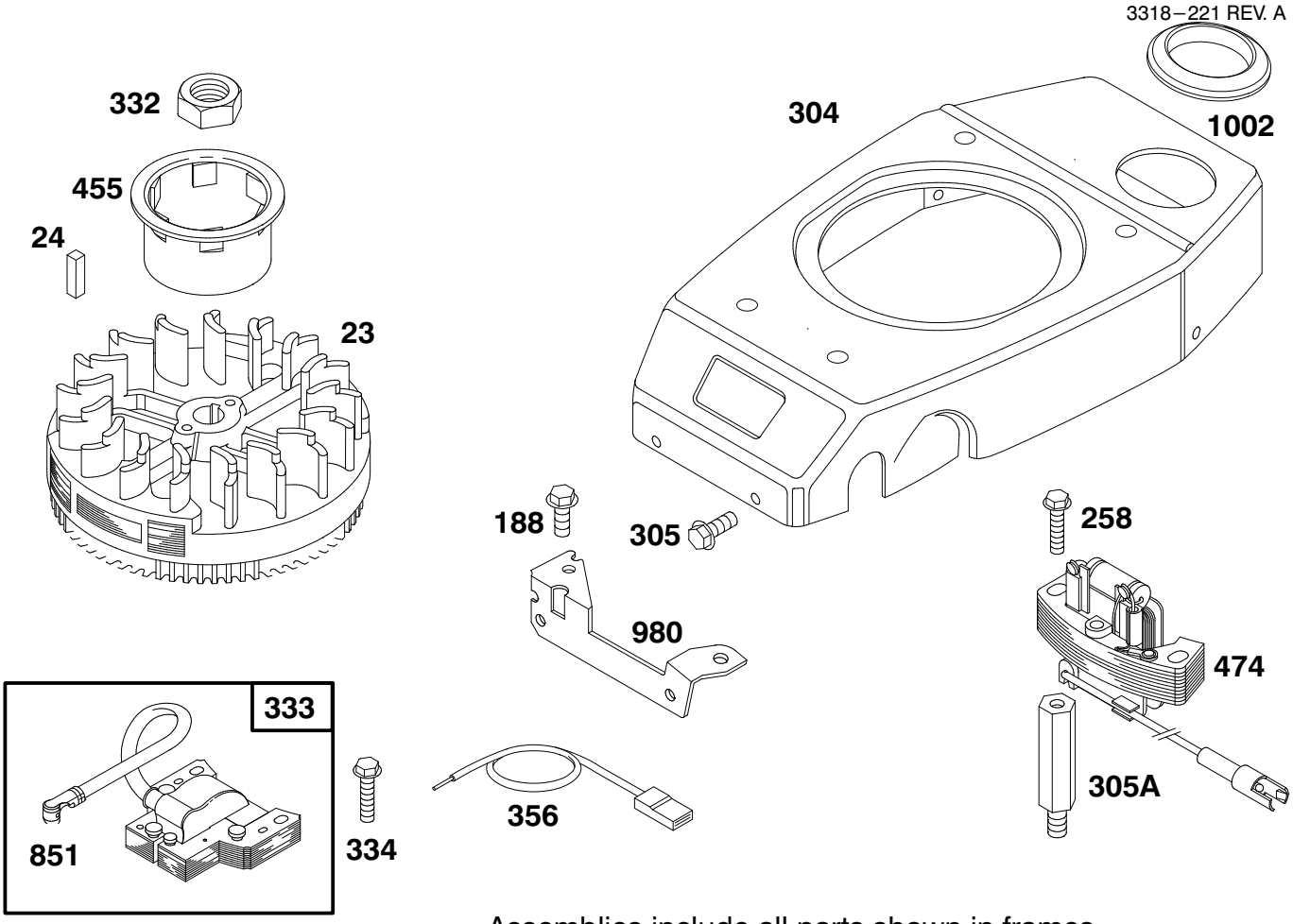

Assemblies include all parts shown in frames.

ENGINE GTS 150 (Model No. 20476 Only)

Ref. No.	Part No.	Description	No. Used
23	77−8320	Flywheel − Magneto	1
24	77−8340	Key − Flywheel	1
37	77−7190	Guard − Flywheel	1
188	77−9360	Screw − Hex Head	1
258	77−8870	Screw − Hex Head	1
304	77−8280	Housing − Blower	1
305	77−8310	Screw − Hex Head	1
305A	77−8390	Stud − Stator Mounting	1
332	77−8360	Nut − Flywheel	1

Ref. No.	Part No.	Description	No. Used
333	77−8420	Armature − Magneto	1
334	77−9420	Screw − Armature Mtg.	1
356	77−8400	Wire − Ground	1
455	77−8350	Cup − Starter	1
474	77−8370	Stator Assembly	1
851	77−8430	Terminal − Spark Plug	1
980	77−7140	Bracket − Blower Housing	1
1002	77−7180	Grommet	1

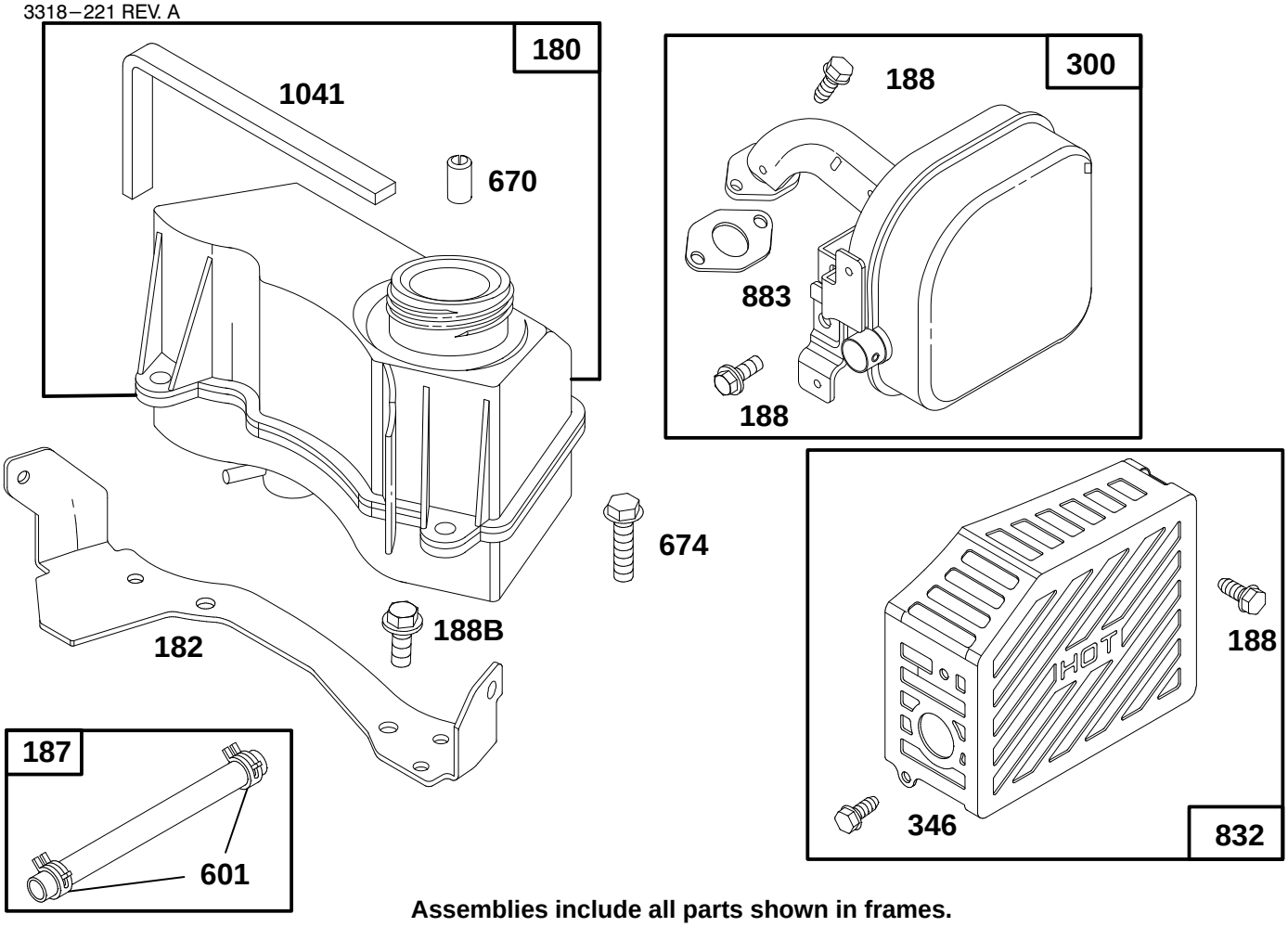

Assemblies include all parts shown in frames.

ENGINE GTS 150 (Model No. 20476 Only)

Ref. No.	Part No.	Description	No. Used
180	77−8580	Tank Assy − Fuel	1
182	77−7170	Bracket − Fuel Tank	1
187	78−4100	Hose − Fuel (Cut To Suit)	1
188	77−9360	Screw − Cap	1
300	77−8640	Muffler − Exhaust	1
346	77−9430	Screw − Hex Head	1

Ref. No.	Part No.	Description	No. Used
601	78−4690	Clamp − Hose	1
670	77−9030	Spacer − Fuel Tank	1
674	77−8600	Screw − Tank Mtg.	1
†832	77−9290	Guard − Muffler	1
†1041	77−8590	Seal − Foam	1

† Included in Gasket Set − Part No. 77−8900

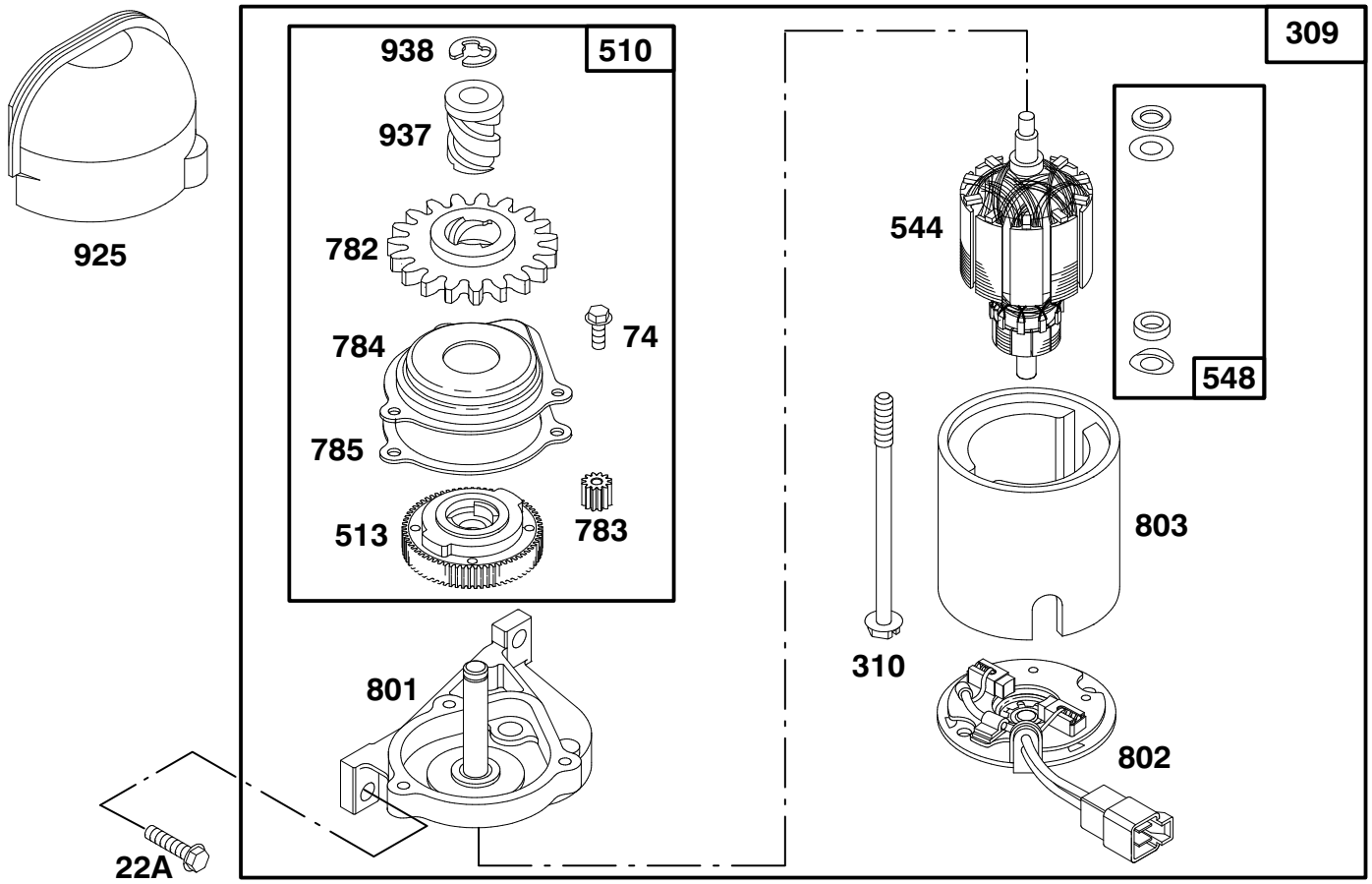

Assemblies include all parts shown in frames.

ENGINE GTS 150 (Model No. 20476 Only)

Ref. No.	Part No.	Description	No. Used
22A	77−8420	Screw − Hex Washer Hd.	1
74	77−8800	Screw − Hex Washer Hd.	1
309	77−8670	Motor − Starter	1
310	77−8710	Screw − Hex Washer Hd.	1
510	77−8910	Drive Kit	1
513	77−8770	Clutch Assembly	1
544	77−8670	Armature Assembly	1
548	77−8470	Washer Set	1
782	77−8810	Pinion − Starter	1

Ref. No.	Part No.	Description	No. Used
783	77−8760	Gear − Pinion	1
784	77−8780	Cover − Gear	1
785	77−8790	Gasket − Cover	1
801	77−8680	Bracket Assembly	1
802	77−8690	Head Assembly	1
803	77−8700	Shell & Magnet Assembly	1
925	77−7200	Cover − Starter	1
937	77−8820	Spline − Starter	1
938	77−8830	Retainer − Lock	1

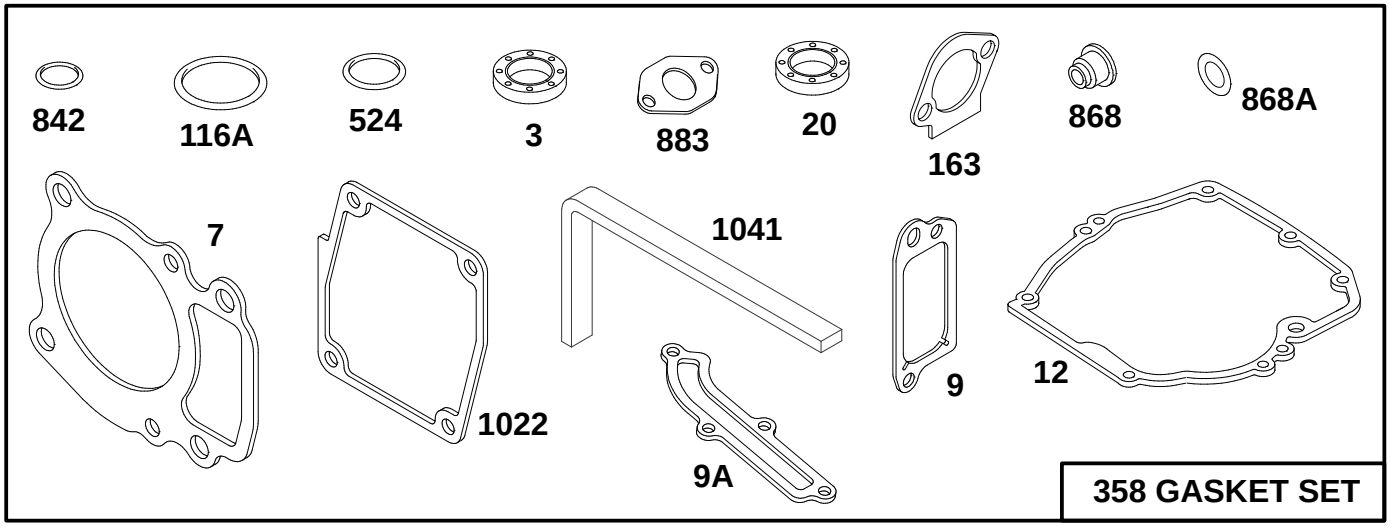

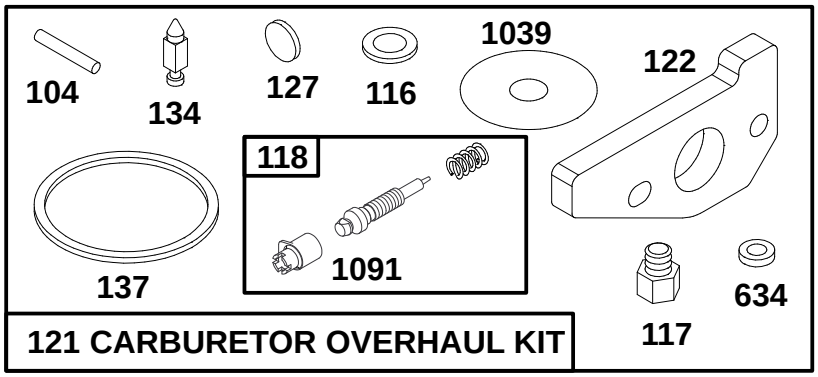

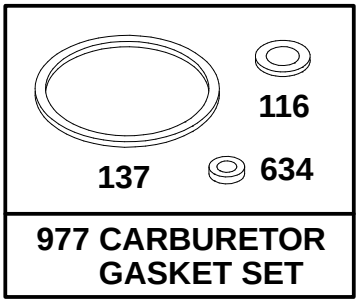

Assemblies include all parts shown in frames.

ENGINE GTS 150 (Model No. 20476 Only)

Ref. No.	Part No.	Description	No. Used
†3	77−9060	Seal − Oil (Upper)	1
†7	77−7740	Gasket − Cylinder Head	1
†9	77−9250	Gasket − Breather	1
†9A	77−7410	Gasket − Breather Cover	1
†12	77−7550	Gasket − Engine Base	1
†20	77−7570	Seal − Oil (Lower)	1
‡104	77−8180	Pin − Float Hinge	1
‡*116	77−8210	Washer − Bowl	1
†116A	77−7660	Seal − O−Ring	1
‡117	77−9610	Jet − Main	1
‡118	77−9620	Valve & Spring − Needle	1
121	77−9580	Overhaul Kit − Carburetor	1
‡122	77−7820	Adapter Assy	1
‡127	94−1651	Plug − Welch	1
‡134	77−8110	Valve − Inlet (Includes Seat)	1

Ref. No.	Part No.	Description	No. Used
‡*137	77−8200	Gasket − Float Bowl	1
†163	77−7960	Gasket − Air Cleaner	1
358	77−8900	Gasket Set	1
†524	77−7270	Seal − O−Ring (Oil Fill Cap)	1
*634	77−8150	Washer − Seal	1
†842	77−7300	Seal − O−Ring (Oil Fill Tube)	1
†868	77−7890	Seal Assy − Valve	1
†868A	77−7900	Seal − Valve	1
†883	77−7760	Gasket − Exhaust	1
977	77−8930	Carburetor Gasket Set	1
†1022	77−7320	Gasket − Rocker Cover	1
‡1039	77−7250	Limiter − Float	1
†1041	77−8590	Seal − Foam (Fuel Tank)	1
‡1091	77−9650	Cap − Limiter	1

‡ Incl. in Carburetor Overhaul Kit − Part No. 77−9580
*Incl. in Carburetor Gasket Set − Part No. 77−8930

† Included in Gasket Set − Part No. 77−8900

TORO PART NUMBER INDEX

Part No.	Description	Pg. No.	Ref. No.	Qty.
3−3287	Spacer	7	5	2
3−3287	Spacer	8	5	2
3−5792	Washer	2	36	1
8−2759	Bag − Grass	9	4	1
14−9989	Wheel & Tire Assembly	1	25	2
16−0029	Wheel & Tire Assembly	5	20	2
16−9569	Panel − Control	7	12	1
16−9579	Panel − Control	8	12	1
16−9589	Housing − 21	1	1	1
19−4050	Knob	7	11	2
19−4050	Knob	8	11	2
25−7740	Knob − Arm	1	21	4
27−6232	Bolt − Wheel	5	23	4
27−6232	Bolt − Wheel	1	26	2
27−6250	Bushing − Wheel	5	8	4
27−7210	Screw − Shoulder	7	4	2
27−7210	Screw − Shoulder	8	4	2
27−7211	Screw − Shoulder	7	7	2
27−7211	Screw − Shoulder	8	7	2
29−9570	Bushing − Yoke	6	37	1
33−3208	Rod − Shield	1	16	1
33−4820	Hinge − Bag Door	9	3	1
36−4780	Washer − Thrust	6	42	1
36−4791	Washer − Thrust	6	46	2
36−6910	Spring	9	5	2
37−1393	Door − Grass Bag	9	8	1
37−7260	Screw − Tapping	2	35	1
37−7260	Screw − Tapping	2	35	2
37−7262	Screw − Special	2	38	1
38−7820	Bearing − Ball	6	58	1
40−1940	Washer	1	19	4
42−0884	V−Belt − BBC	3	22	1
42−3190	Bolt − Blade	4	4	2
42−3520	Cap − End	5	5	2
42−4020	Frame − Bag	9	6	1
42−4030	Frame − Upper Bag	9	2	1
42−6890	Hub Assembly − BBC	4	6	1
43−1362	Handle − Lower	7	1	1
43−1362	Handle − Lower	8	1	1
43−8480	Decal − Danger	1	3	1
44−0580	Shield − Trailing	1	15	1
46−5460	Housing − Control LH	7	19	1
46−5460	Housing − Control LH	8	19	1
46−5480	Cable − Traction	7	42	1
46−5480	Cable − Traction	8	42	1
46−5510	Spring − Torsion	7	25	1
46−5510	Spring − Torsion	8	25	1
46−5520	Lever − Traction	7	21	1
46−5520	Lever − Traction	8	21	1
46−5530	Hook − Control	7	24	1
46−5530	Hook − Control	8	24	1
46−5540	Lever − Cable	7	23	1
46−5540	Lever − Cable	8	23	1
46−5550	Bushing − PM	7	26	1
46−5550	Bushing − PM	8	26	1
46−5590	Spacer	7	20	1
46−5590	Spacer	8	20	1
46−5630	Hub − Pulley Idler	3	23	1
46−5650	Pulley − Idler	3	21	1
46−5670	Spring − Torsion Lower	3	19	1
46−5692	Shield − BBC	4	8	1
46−5780	Switch − Starter	8	46	1
46−6440	Cover − Cables Control	7	43	1
46−6440	Cover − Cables Control	8	43	1
46−6810	Screw − Hex Washer Hd.	1	14	1
46−6811	Screw − Hex Washer Hd.	1	13	3
46−6811	Screw − Hex Washer Hd.	4	15	3
46−7030	Retainer − Cable	1	29	1
46−7040	Screw − Hex Washer Hd.	7	33	3
46−7040	Screw − Hex Washer Hd.	8	33	3
46−7370	Decal − Step Pad	1	5	1
46−8090	Screw − Tapping	2	49	2
48−2060	Needle Bearing	6	21	2
49−1630	Spacer − Support	7	36	1
49−1630	Spacer − Support	8	36	1
49−2040	Screw − Hex Hd.	2	33	2
49−2040	Screw − Self Tapping	6	8	6
49−2810	Link − Control	3	11	1
49−2820	Lever	3	14	1
49−7950	Sleeve − Bell Crank	3	13	1
49−7960	Crank − Bell	3	12	1
49−7970	Spring − Torsion Upper	3	16	1
52−3480	Damper − Vibration	4	7	2
52−7410	Spring − Leaf	7	31	1
52−7410	Spring − Leaf	8	31	1
52−7430	Bar − Control	7	18	1
52−7430	Bar − Control	8	18	1
54−9190	Nut − Lock	4	14	2
55−3570	Gas Cap Assembly	3	2	1
55−3760	Gear − Pinion 15 Tooth	6	47	1
55−3770	Gear − 49 Tooth 1st Gear	6	56	1
55−3780	Gear − Pinion 20 Tooth	6	48	1
55−3790	Gear − 44 Tooth 2nd Gear	6	55	1
55−3800	Gear − Pinion	6	49	1
55−3810	Gear − 39 Tooth 3rd Gear	6	54	1
55−7520	Battery Assembly	8	50	1
55−8180	Retainer − Battery	8	51	1
56−6160	Flywheel − BBC	4	3	1
56−6170	Drum − Brake	4	5	1
57−6290	Pin − Insert	7	32	1
57−6290	Pin − Insert	8	32	1
60−8710	Gear Case − Upper	6	59	1
60−8730	Cover − Gear Case	6	44	1
60−8750	Bushing − Int. Shaft	6	45	2
60−8770	Bushing − Output Shaft	6	43	1
60−8790	Sleeve − Gear	6	53	1
60−8800	Shaft − Intermediate	6	50	1
60−8810	Retainer − Shift Fork	6	38	1
60−8821	Lever − Shift	5	2	1
60−8840	Pulley − Half	6	10	2
60−8850	Bushing − Output Shaft	6	51	1
60−8870	Yoke − Shift	6	36	1
60−8890	Pinion − Bevel	6	57	1
62−3720	Clamp − Cable	1	4	1
62−3900	V−Belt	5	1	1
62−4320	Bracket − Guide Belt	2	32	1
62−6660	Spacer	6	9	1
62−6673	Gear Case Assembly	1	31	1
62−6673	Gear Case Assembly	6	*	1
62−7560	Pulley − Driver	4	2	1
63−8360	Key − Ignition	8	49	1
63−8701−03	Pivot Arm Assembly	6	2	2
63−8721	Spring Arm Ass'y	5	6	2
65−2720	Ring − Retaining	5	11	4
65−4710	Ring − Friction	5	12	2
65−4720	Spring − Compression	5	17	2
65−4730	Washer − Thrust	5	9	2
65−4740	Washer − Thrust Keyed	5	10	4
65−4750	Gear − Pinion	5	16	2
65−4760	Washer	5	13	2

*Not Illustrated

TORO PART NUMBER INDEX (Cont.)

Part No.	Description	Pg. Ref. No.	No.	Qty.
65−4770	Shaft − Output	6	18	1
65−5250	Clip − Spring	6	61	1
66−0160	Housing − Control RH	7	30	1
66−0160	Housing − Control RH	8	30	1
66−0170	Washer − Nylon	7	28	1
66−0170	Washer − Nylon	8	28	1
66−0180	Rocker	7	22	1
66−0180	Rocker	8	22	1
66−0190	Spring − Detent	7	29	1
66−0190	Spring − Detent	8	29	1
66−0541	Spring Arm Ass'y − Front	1	20	2
66−0560	Screw − Shoulder	1	24	2
66−0570	Guide − Belt	3	8	1
66−0580	Arm − Pivot	1	23	2
66−2150	Decal − Bag Door	9	7	1
66−6040	Key − Rocking RH	5	*	1
66−6050	Key − Rocking LH	5	14	1
68−9780	Bearing	3	18	2
70−1160	Washer − PM	3	17	1
70−9760	Bushing	6	19	2
71−8391	Control − Control	7	40	1
71−8391	Control − Control	8	40	1
71−9350	Bracket − Spring	2	41	1
74−1660	Cover − Wheel	5	18	2
74−1671	Spacer − Cover Wheel	5	19	2
76−0760	Key − Shift	6	40	2
76−0770	Collar − Shift	6	41	1
76−0780	Sleeve − Shift Key	6	39	1
76−2712	Control − Speed Ground	7	39	1
76−2712	Control − Speed Ground	8	39	1
76−4640	Latch − Plug	2	44	1
76−4650	Grip − Latch	2	43	1
76−4660	Spring − Extension	2	48	1
77−0500	Plug − Discharge	1	12	1
77−7040	Cover − Air Cleaner	13	968	1
77−7040	Cover − Air Cleaner	22	968	1
77−7140	Bracket − Blower Housing	16	980	1
77−7140	Bracket − Blower Housing	25	980	1
77−7170	Bracket − Fuel Tank	17	182	1
77−7170	Bracket − Fuel Tank	26	182	1
77−7180	Grommet	16	1002	1
77−7180	Grommet	25	1002	1
77−7190	Guard − Flywheel	16	37	1
77−7190	Guard − Flywheel	25	37	1
77−7200	Cover − Starter	27	925	1
77−7210	Insert − Rewind Handle	14	59	1
77−7210	Insert − Rewind Handle	23	59	1
77−7210	Insert−Rewind Handle	15	59	1
77−7210	Insert−Rewind Handle	24	59	1
77−7240	Bowl − Fuel	12	136	1
77−7240	Bowl − Fuel	21	136	1
77−7250	Limiter − Float	12	1039	1
77−7250	Limiter − Float	18	1039	1
77−7250	Limiter − Float	21	1039	1
77−7250	Limiter − Float	28	1039	1
77−7260	Dipstick − Oil	11	523	1
77−7260	Dipstick − Oil	20	523	1
77−7270	Seal − O−Ring	11	524	1
77−7270	Seal − O−Ring	18	524	1
77−7270	Seal − O−Ring	20	524	1
77−7270	Seal − O−Ring	28	524	1
77−7280	Tube − Oil Fill	11	525	1
77−7280	Tube − Oil Fill	20	525	1
77−7300	Seal − O−Ring	11	842	1
77−7300	Seal − O−Ring	18	842	1
77−7300	Seal − O−Ring	20	842	1
77−7300	Seal − O−Ring	28	842	1
77−7320	Gasket − Rocker Cover	10	1022	1
77−7320	Gasket − Rocker Cover	18	1022	1
77−7320	Gasket − Rocker Cover	19	1022	1
77−7320	Gasket − Rocker Cover	28	1022	1
77−7330	Plug − Spark	10	337	1
77−7330	Plug − Spark	19	337	1
77−7340	Elbow − Spark Plug	10	635	1
77−7340	Elbow − Spark Plug	19	635	1
77−7360	Screw − Hex Head	10	10	1
77−7360	Screw − Hex Head	19	10	1
77−7370	Lever Assembly −	11	227	1
77−7370	Lever Assembly −	20	227	1
77−7380	Bolt − Governor Lever	11	562	1
77−7380	Bolt − Governor Lever	20	562	1
77−7390	Nut − Hex	11	592	1
77−7390	Nut − Hex	20	592	1
77−7400	Cover − Breather	10	572	1
77−7400	Cover − Breather	19	572	1
77−7410	Gasket − Breather	10	9A	1
77−7410	Gasket − Breather	19	9A	1
77−7410	Gasket − Breather Cover	18	9A	1
77−7410	Gasket − Breather Cover	28	9A	1
77−7420	Screw − Cover Mtg	10	307	1
77−7420	Screw − Cover Mtg	19	307	1
77−7450	Screw − Cap	11	819	1
77−7450	Screw − Cap	20	819	1
77−7460	Crank − Governor	11	616	1
77−7460	Crank − Governor	20	616	1
77−7470	Washer	11	230	1
77−7470	Washer	20	230	1
77−7480	Push Nut	11	615	1
77−7480	Push Nut	20	615	1
77−7490	Gear − Cam	11	46	1
77−7490	Gear − Cam	20	46	1
77−7500	Gear − Governor	11	219	1
77−7500	Gear − Governor	20	219	1
77−7510	Crankshaft	11	16	1
77−7510	Crankshaft	20	16	1
77−7530	Gear − Timing	11	741	1
77−7530	Gear − Timing	20	741	1
77−7550	Gasket − Engine Base	11	12	1
77−7550	Gasket − Engine Base	18	12	1
77−7550	Gasket − Engine Base	20	12	1
77−7550	Gasket − Engine Base	28	12	1
77−7560	Base − Engine	11	18	1
77−7560	Base − Engine	20	18	1
77−7570	Seal − Oil	11	20	1
77−7570	Seal − Oil	18	20	1
77−7570	Seal − Oil	20	20	1
77−7570	Seal − Oil	28	20	1
77−7590	Cylinder Assy	10	1	1
77−7590	Cylinder Assy	19	1	1
77−7600	Pin − Dowel	10	718	1
77−7600	Pin − Dowel	19	718	1
77−7610	Tappet − Valve	10	45	1
77−7610	Tappet − Valve	19	45	1
77−7620	Rod − Push	10	1026	1
77−7620	Rod − Push	19	1026	1
77−7630	Screw − Cylinder Head	10	13	1
77−7630	Screw − Cylinder Head	19	13	1
77−7640	Pump − Oil	11	1024	1
77−7640	Pump − Oil	20	1024	1
77−7650	Cover − Oil Pump	11	979	1

*Not Illustrated

TORO PART NUMBER INDEX (Cont.)

Part No.	Description	Pg. Ref. No.	No.	Qty.
77−7650	Cover − Oil Pump	20	979	1
77−7660	O−Ring	11	116A	1
77−7660	O−Ring	20	116A	1
77−7660	Seal − O−Ring	18	116A	1
77−7660	Seal − O−Ring	28	116A	1
77−7670	Rod − Connecting	11	29	1
77−7670	Rod − Connecting	20	29	1
77−7680	Screw − Connecting Rod	11	32	1
77−7680	Screw − Connecting Rod	20	32	1
77−7690	Piston Assy (Std.)	11	25	1
77−7690	Piston Assy (Std.)	20	25	1
77−7700	Ring Set (Std.)	11	26	1
77−7700	Ring Set (Std.)	20	26	1
77−7710	Lock − Piston Pin	11	27	1
77−7710	Lock − Piston Pin	20	27	1
77−7730	Head − Cylinder	10	5	1
77−7730	Head − Cylinder	19	5	1
77−7740	Gasket − Cylinder Head	10	7	1
77−7740	Gasket − Cylinder Head	18	7	1
77−7740	Gasket − Cylinder Head	19	7	1
77−7740	Gasket − Cylinder Head	28	7	1
77−7760	Gasket − Exhaust	10	883	1
77−7760	Gasket − Exhaust	18	883	1
77−7760	Gasket − Exhaust	19	883	1
77−7760	Gasket − Exhaust	28	883	1
77−7770	Guide − Push Rod	10	1034	1
77−7770	Guide − Push Rod	19	1034	1
77−7780	Stud − Rocker Arm	10	166	1
77−7780	Stud − Rocker Arm	19	166	1
77−7790	Arm − Rocker	10	1029	1
77−7790	Arm − Rocker	19	1029	1
77−7800	Cap − Valve	10	238	1
77−7800	Cap − Valve	19	238	1
77−7810	Spring − Valve	10	35	1
77−7810	Spring − Valve	19	35	1
77−7820	Adapter Assy	10	122	1
77−7820	Adapter Assy	12	122	1
77−7820	Adapter Assy	18	122	1
77−7820	Adapter Assy	19	122	1
77−7820	Adapter Assy	21	122	1
77−7820	Adapter Assy	28	122	1
77−7860	Valve − Exhaust	10	33	1
77−7860	Valve − Exhaust	19	33	1
77−7870	Retainer − Spring	10	40	1
77−7870	Retainer − Spring	19	40	1
77−7880	Valve − Intake	10	34	1
77−7880	Valve − Intake	19	34	1
77−7890	Seal Assy − Valve	10	868	1
77−7890	Seal Assy − Valve	18	868	1
77−7890	Seal Assy − Valve	19	868	1
77−7890	Seal Assy − Valve	28	868	1
77−7900	Gasket − Valve	10	868A	1
77−7900	Gasket − Valve	19	868A	1
77−7900	Seal − Valve	18	868A	1
77−7900	Seal − Valve	28	868A	1
77−7910	Ball & Screw − Rocker	10	192	1
77−7910	Ball & Screw − Rocker	19	192	1
77−7920	Screw − Air Cleaner	13	969	1
77−7920	Screw − Air Cleaner	22	969	1
77−7930	Screw − Air Cleaner	13	971	1
77−7930	Screw − Air Cleaner	22	971	1
77−7940	Base − Air Cleaner	13	966	1
77−7940	Base − Air Cleaner	22	966	1
77−7950	Element − Filter	13	535	1
77−7950	Element − Filter	22	535	1
77−7960	Gasket − Air Cleaner	13	163	1
77−7960	Gasket − Air Cleaner	18	163	1
77−7960	Gasket − Air Cleaner	22	163	1
77−7960	Gasket − Air Cleaner	28	163	1
77−7970	Screw − Hex Head	12	124	1
77−7970	Screw − Hex Head	21	124	1
77−7980	Link − Governor	13	201	1
77−7980	Link − Governor	22	201	1
77−7990	Spring − Governor	13	209	1
77−7990	Spring − Governor	22	209	1
77−8000	Bracket − Carburetor	13	620	1
77−8000	Bracket − Carburetor	22	620	1
77−8020	Screw Assy − Speed Adj.	13	98A	1
77−8020	Screw Assy − Speed Adj.	22	98A	1
77−8030	Tube − Breather	13	529	1
77−8040	Tube − Vent	12	1011	1
77−8040	Tube − Vent	21	1011	1
77−8080	Valve − Throttle	12	130	1
77−8080	Valve − Throttle	21	130	1
77−8090	Screw − Valve Mtg	12	95	1
77−8090	Screw − Valve Mtg	21	95	1
77−8110	Valve − Inlet	12	134	1
77−8110	Valve − Inlet	18	134	1
77−8110	Valve − Inlet	21	134	1
77−8110	Valve − Inlet	28	134	1
77−8130	Shaft − Choke	12	141	1
77−8130	Shaft − Choke	21	141	1
77−8140	Spring − Choke	13	618	1
77−8140	Spring − Choke	22	618	1
77−8150	Washer − Seal	12	*634	1
77−8150	Washer − Seal	18	*634	1
77−8150	Washer − Seal	21	*634	1
77−8150	Washer − Seal	28	*634	1
77−8160	Shaft − Throttle	12	131	1
77−8160	Shaft − Throttle	21	131	1
77−8170	Float − Carburetor	12	133	1
77−8170	Float − Carburetor	21	133	1
77−8180	Pin − Float Hinge	12	104	1
77−8180	Pin − Float Hinge	18	104	1
77−8180	Pin − Float Hinge	21	104	1
77−8180	Pin − Float Hinge	28	104	1
77−8190	Bowl Assy − Carburetor	12	975	1
77−8190	Bowl Assy − Carburetor	21	975	1
77−8200	Gasket − Float Bowl	12	*137	1
77−8200	Gasket − Float Bowl	18	*137	1
77−8200	Gasket − Float Bowl	21	*137	1
77−8200	Gasket − Float Bowl	28	*137	1
77−8210	Gasket − Sealing	12	*116	1
77−8210	Gasket − Sealing	21	*116	1
77−8210	Washer − Bowl	18	116	1
77−8210	Washer − Bowl	28	116	1
77−8220	Screw − Hex Head	12	955	1
77−8220	Screw − Hex Head	21	955	1
77−8240	Screw − Idle Adj.	12	98	1
77−8240	Screw − Idle Adj.	21	98	1
77−8270	Housing − Blower	16	304	1
77−8280	Housing − Blower	25	304	1
77−8300	Screw − Hex Head	14	65	1
77−8300	Screw − Hex Head	23	65	1
77−8300	Screw−Hex Head	15	65	1
77−8300	Screw−Hex Head	24	65	1
77−8310	Screw − Hex Head	11	305	1
77−8310	Screw − Hex Head	16	305	1
77−8310	Screw − Hex Head	20	305	1
77−8310	Screw − Hex Head	25	305	1

*Not Illustrated

TORO PART NUMBER INDEX (Cont.)

Part No.	Description	Pg. No.	Ref. No.	Qty.
77−8320	Flywheel − Magneto	25	23	1
77−8330	Flywheel − Magneto	16	23	1
77−8340	Key − Flywheel	16	24	1
77−8340	Key − Flywheel	25	24	1
77−8350	Cup − Starter	16	455	1
77−8350	Cup − Starter	25	455	1
77−8360	Nut − Flywheel	16	332	1
77−8360	Nut − Flywheel	25	332	1
77−8370	Stator Assembly	25	474	1
77−8390	Stud − Stator Mounting	25	305A	1
77−8400	Wire − Ground	16	356	1
77−8400	Wire − Ground	25	356	1
77−8420	Armature − Magneto	16	333	1
77−8420	Armature − Magneto	25	333	1
77−8420	Screw − Hex Washer Hd.	27	22A	1
77−8430	Terminal − Spark Plug	16	851	1
77−8430	Terminal − Spark Plug	25	851	1
77−8450	Starter Assy − Rewind	14	608	1
77−8450	Starter Assy − Rewind	23	608	1
77−8460	Housing − Rewind Starter	14	55	1
77−8460	Housing − Rewind Starter	23	55	1
77−8470	Retainer − Rewind Starter	14	456	1
77−8470	Retainer − Rewind Starter	23	456	1
77−8470	Washer Set	27	548	1
77−8480	Rope − Starter	14	58	1
77−8480	Rope − Starter	23	58	1
77−8490	Screw − Rewind Starter	14	461	1
77−8490	Screw − Rewind Starter	23	461	1
77−8500	Spring − Torsion	14	515	1
77−8500	Spring − Torsion	23	515	1
77−8510	Handle − Rewind Starter	14	60	1
77−8510	Handle − Rewind Starter	23	60	1
77−8520	Handle−Rewind Starter	15	60	1
77−8520	Handle−Rewind Starter	24	60	1
77−8530	Pawl − Starter	14	459	1
77−8530	Pawl − Starter	23	459	1
77−8550	Pin − Spring	14	718A	1
77−8550	Pin − Spring	23	718A	1
77−8570	Cover − Spring	14	1016	1
77−8570	Cover − Spring	23	1016	1
77−8580	Tank Assy − Fuel	17	180	1
77−8580	Tank Assy − Fuel	26	180	1
77−8590	Seal − Foam	17	1041	1
77−8590	Seal − Foam	18	1041	1
77−8590	Seal − Foam	26	1041	1
77−8590	Seal − Foam	28	1041	1
77−8600	Screw − Tank Mtg.	17	674	1
77−8600	Screw − Tank Mtg.	26	674	1
77−8640	Muffler − Exhaust	17	300	1
77−8640	Muffler − Exhaust	26	300	1
77−8670	Armature Assembly	27	544	1
77−8670	Motor − Starter	27	309	1
77−8680	Bracket Assembly	27	801	1
77−8690	Head Assembly	27	802	1
77−8700	Shell & Magnet Assembly	27	803	1
77−8710	Screw − Hex Washer Hd.	27	310	1
77−8760	Gear − Pinion	27	783	1
77−8770	Clutch Assembly	27	513	1
77−8780	Cover − Gear	27	784	1
77−8790	Gasket − Cover	27	785	1
77−8800	Screw − Hex Washer Hd.	27	74	1
77−8810	Pinion − Starter	27	782	1
77−8820	Spline − Starter	27	937	1
77−8830	Retainer − Lock	27	938	1
77−8870	Screw − Hex Head	25	258	1
77−8900	Gasket Set	18	358	1
77−8900	Gasket Set	28	358	1
77−8910	Drive Kit	27	510	1
77−8930	Carburetor Gasket Set	18	977	1
77−8930	Carburetor Gasket Set	28	977	1
77−9030	Spacer − Fuel Tank	17	670	1
77−9030	Spacer − Fuel Tank	26	670	1
77−9060	Seal − Oil	10	3	1
77−9060	Seal − Oil	18	3	1
77−9060	Seal − Oil	19	3	1
77−9060	Seal − Oil	28	3	1
77−9070	Screw − Engine Base	11	22	1
77−9070	Screw − Engine Base	20	22	1
77−9200	Screw − Hex Head	10	10A	1
77−9200	Screw − Hex Head	19	10A	1
77−9240	Plug − Pipe	11	15	1
77−9240	Plug − Pipe	20	15	1
77−9250	Gasket − Breather	10	9	1
77−9250	Gasket − Breather	18	9	1
77−9250	Gasket − Breather	19	9	1
77−9250	Gasket − Breather	28	9	1
77−9270	Pulley − Rewind Starter	14	56	1
77−9270	Pulley − Rewind Starter	23	56	1
77−9280	Short Block	3	*	1
77−9290	Guard − Muffler	17	832	1
77−9290	Guard − Muffler	26	832	1
77−9300	Breather Assy	10	8	1
77−9300	Breather Assy	19	8	1
77−9310	Screw − Set	10	192A	1
77−9310	Screw − Set	19	192A	1
77−9320	Cover − Valve	10	1023	1
77−9320	Cover − Valve	19	1023	1
77−9340	Pin Assembly − Piston	11	28	1
77−9340	Pin Assembly − Piston	20	28	1
77−9360	Screw − Cap	17	188	1
77−9360	Screw − Cap	26	188	1
77−9360	Screw − Hex Head	11	188	1
77−9360	Screw − Hex Head	13	188	1
77−9360	Screw − Hex Head	16	188	1
77−9360	Screw − Hex Head	20	188	1
77−9360	Screw − Hex Head	22	188	1
77−9360	Screw − Hex Head	25	188	1
77−9410	Tube − Breather	10	11	1
77−9410	Tube − Breather	19	11	1
77−9420	Screw − Armature Mtg.	16	334	1
77−9420	Screw − Armature Mtg.	25	334	1
77−9430	Screw − Hex Head	17	346	1
77−9430	Screw − Hex Head	26	346	1
77−9470	Tube − Breather	22	529	1
77−9580	Overhaul Kit − Carburetor	18	121	1
77−9580	Overhaul Kit − Carburetor	28	121	1
77−9600	Valve − Choke	12	108	1
77−9600	Valve − Choke	21	108	1
77−9610	Jet − Main	12	117	1
77−9610	Jet − Main	18	117	1
77−9610	Jet − Main	21	117	1
77−9610	Jet − Main	28	117	1
77−9620	Valve & Spring − Needle	12	118	1
77−9620	Valve & Spring − Needle	18	118	1
77−9620	Valve & Spring − Needle	21	118	1
77−9620	Valve & Spring − Needle	28	118	1
77−9630	Carburetor Assy	12	125	1
77−9630	Carburetor Assy	21	125	1
77−9640	Jet − Pilot	12	147	1
77−9640	Jet − Pilot	21	147	1

*Not Illustrated

TORO PART NUMBER INDEX (Cont.)

Part No.	Description	Pg. Ref. No.	No.	Qty.
77−9650	Cap − Limiter	12	1091	1
77−9650	Cap − Limiter	18	1091	1
77−9650	Cap − Limiter	21	1091	1
77−9650	Cap − Limiter	28	1091	1
78−4100	Hose − Fuel	17	187	1
78−4100	Hose − Fuel	26	187	1
78−4690	Clamp − Hose	17	601	1
78−4690	Clamp − Hose	26	601	1
80−2770	Cup − Anti Scalp	4	13	1
80−3770	Retainer − Door	2	42	1
80−4790	Harness − Wire	8	52	1
82−5680	Bracket − Adjustment Trac.	1	27	1
82−8780	Retainer − Cable	5	4	1
82−9150	Chute − Discharge	1	11	1
82−9910	Cover − Belt	1	30	1
83−6600	Cable − Clutch	7	41	1
83−6600	Cable − Clutch	8	41	1
84−8361	Latch − Handle LH	7	2	1
84−8361	Latch − Handle LH	8	2	1
84−8401	Latch − Handle RH	7	3	1
84−8401	Latch − Handle RH	8	3	1
91−2253	Cover − Wheel	5	21	1
92−1720	Kicker − RH Front	1	7	1
92−1730	Kicker − LH Front	1	8	1
92−1743	Charger − Battery	8	*	1
92−1750	Plate − Kicker Rear	1	6	1
92−2260	Screw − Handle	7	10	3
92−2260	Screw − Handle	8	10	3
92−2261	Screw − Handle	7	38	1
92−2261	Screw − Handle	8	38	1
92−2267	Screw − Handle	7	37	1
92−2267	Screw − Handle	8	37	1
92−2277	Handle − Upper	7	8	1
92−2277	Handle − Upper	8	8	1
92−2279	Decal − HOC	1	17	4
92−2289	Plate − Logo Toro	3	3	1
92−3146	Decal − Panel Front	8	15	1
92−4086	Grip − Foam	7	9	1
92−4086	Grip − Foam	8	9	1
92−9665	Screw − Phillips Hd.	7	17	4
92−9665	Screw − Phillips Hd.	8	17	4
93−0248	Decal − Warning	2	34	1
93−3154	Plate − Latch	2	47	1
93−3696	Decal − Deck	1	2	1
93−3697	Decal − Panel Front	7	15	1
93−3699	Decal − Engine	3	4	1
93−4106	Blade − 21	4	11	1
93−4126	Spacer − Blade	4	9	1
93−4181	Stiffener − Blade	4	12	1
93−7167	Decal − Instruction	7	13	1
93−7168	Decal − Instruction	8	13	1
93−7351	Door − Discharge	1	10	1
93−8470	Screw − Clamp (P/W Eng.)	3	5	1
94−1601	Brake Plate Assembly	3	20	1
94−1605	Engine − GTS 150	3	1	1
94−1606	Engine − GTS 150	3	1	1
94−1651	Plug − Welch	12	127	1
94−1651	Plug − Welch	18	127	1
94−1651	Plug − Welch	21	127	1
94−1651	Plug − Welch	28	127	1
94−1653	Cup − Starter	15	455	1
94−1653	Cup − Starter	24	455	1
94−1654	Pawl−Starter	15	459	1
94−1654	Pawl−Starter	24	459	1
94−1655	Spring−Torsion	15	515	1
94−1655	Spring−Torsion	24	515	1
94−1656	Housing−Rewind Starter	15	55	1
94−1656	Housing−Rewind Starter	24	55	1
94−1657	Pulley−Rewind Starter	15	56	1
94−1657	Pulley−Rewind Starter	24	56	1
94−1659	Retainer − Rewind Starter	15	456	1
94−1659	Retainer − Rewind Starter	24	456	1
94−1660	Screw−Rewind Starter	15	461	1
94−1660	Screw−Rewind Starter	24	461	1
94−1668	Rope−Starter (Cut To Suit)	15	58	1
94−1668	Rope−Starter (Cut To Suit)	24	58	1
94−1678	Starter Assy−Rewind	15	608	1
94−1678	Starter Assy−Rewind	24	608	1
218−461	Nut − Hex	8	48	1
2210−249	Clamp − Casing	3	6	1
237−153	O−Ring	5	7	2
2412−50	Clip − Tubing Convoluted	7	44	4
2412−50	Clip − Tubing Convoluted	8	44	3
2412−83	R−Clamp	2	39	1
2412−87	Clamp − Cable	2	37	1
302−56	Fitting − Grease	6	20	2
322−16	Screw − Hex Hd. Cap	3	24	1
3254−5	Washer − Lock	8	47	1
3256−23	Washer − Flat	3	10	2
3256−24	Washer − Flat	6	12	1
3257−17	Key − Woodruff	4	1	1
3272−10	Pin − Cotter	5	3	1
3290−378	Tie − Cable	7	45	3
3290−378	Tie − Cable	8	45	5
3290−422	Nut − Push	9	1	2
3295−35	Rivet	2	45	1
3296−5	Locknut	6	11	1
3296−6	Nut − Lock	1	18	4
3296−6	Nut − Lock	5	24	2
3296−33	Nut − Lock	4	10	1
3296−47	Nut − Lock	3	25	2
3296−47	Nut − Lock	7	46	1
3296−47	Nut − Lock	8	53	1
3296−72	Nut − Lock	7	6	3
3296−72	Nut − Lock	8	6	3
3296−74	Nut − Flange	7	35	2
3296−74	Nut − Flange	8	35	2
3296−75	Nut − Lock	7	34	1
3296−75	Nut − Lock	8	34	1
32104−96	Screw − Hex Socket Hd.	3	15	1
32104−107	Screw − Hex Hd.	3	9	1
32121−9	Pin − Roll	7	27	1
32121−9	Pin − Roll	8	27	1
32121−120	Pin − Coil	6	52	1
32144−70	Screw − Tapping	5	22	1
32144−70	Screw − Tapping	3	26	2
32144−70	Screw − Tapping	1	28	4
32144−85	Screw − Hex Hd.	1	22	2
32144−85	Screw − Hex Hd. Cap	5	25	2
32144−102	Screw	3	7	3
32144−111	Screw − PPH	1	9	6
32144−112	Screw − Thr'd Form	2	40	1

OPTIONAL EQUIPMENT

Recycler Side Discharge Kit ..... Model No. 59197
Dethatcher Kit ..... Model No. 59131
Mow & Feed ..... Model No. 52070

*Not Illustrated

PRODUCT CHANGES

In an effort to make improvements available to TORO owners as quickly as possible, minor changes are incorporated into Toro's products from time to time that do not become immediately shown in the Parts Catalog. If such a change has been made in your unit, which is not reflected in your manual, see your TORO Distributor or his Authorized TORO Service Dealer for information and part numbers.

COUNTRIES OTHER THAN THE UNITED STATES OR CANADA

Customers who have purchased TORO products exported from the United States or Canada should contact their Toro Distributor (Dealer) to obtain guarantee policies for your country, province or state. If for any reason you are dissatisfied with your Distributor's service or have difficulty obtaining guarantee information, contact the TORO importer. If all other remedies fail, you may contact us at The Toro Company.

MAINTENANCE RECORD

Date								

Compliance with Radio Interference Regulations Certified.
Certifie Conforme au Reglement sur le Brouillage Radioelectrique.

Litho in U.S.A.

MAINTENANCE RECORD

Date								

MAINTENANCE RECORD

Date								