Form No. 3365-366 Rev A

Emotion 43cm Lawn Mower

Model No. 21026—Serial No. 290003001 and Up

Model No. 21027—Serial No. 290003001 and Up

Operator's Manual

Introduction

This rotary-blade, walk-behind lawn mower is intended to be used by residential homeowners or professional, hired operators. It is designed primarily for cutting grass on well-maintained lawns on residential or commercial properties. It is not designed for cutting brush or for agricultural uses.

Read this information carefully to learn how to operate and maintain your product properly and to avoid injury and product damage. You are responsible for operating the product properly and safely.

You may contact Toro directly at www.Toro.com for product and accessory information, help finding a dealer, or to register your product.

Whenever you need service, genuine Toro parts, or additional information, contact an Authorized Service Dealer or Toro Customer Service and have the model and serial numbers of your product ready. Figure 1 identifies the location of the model and serial numbers on the product.

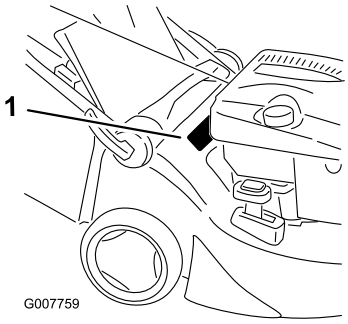

Figure 1

1. Model and serial number plate

Write the product model and serial numbers in the space below:

Model No. _____

Serial No. _____

This manual identifies potential hazards and has safety messages identified by the safety alert symbol (Figure 2), which signals a hazard that may cause serious injury or death if you do not follow the recommended precautions.



Figure 2

1. Safety alert symbol

This manual uses 2 words to highlight information. **Important** calls attention to special mechanical information and **Note** emphasizes general information worthy of special attention.

For models with stated engine horsepower, the gross horsepower of the engine was laboratory rated by the engine manufacturer in accordance with SAE J1940. As configured to meet safety, emission, and operating requirements, the actual engine horsepower on this class of lawn mower will be significantly lower.

Safety

Improperly using or maintaining this mower can result in injury. To reduce the potential for injury, comply with these safety instructions.

Toro designed and tested this mower for reasonably safe service; however, failure to comply with the following instructions may result in personal injury.

To ensure maximum safety, best performance, and to gain knowledge of the product, it is essential that you and any other operator of the mower read and understand the contents of this manual before the engine is ever started. Pay particular attention to the safety alert symbol (Figure 2) which means Caution, Warning, or Danger—"personal safety instruction." Read and understand the instruction because it has to do with safety. Failure to comply with the instruction may result in personal injury.

© 2010—The Toro® Company
8111 Lyndale Avenue South
Bloomington, MN 55420

Register at www.Toro.com.

CE

Original Instructions (EN)
Printed in Poland
All Rights Reserved

General Lawn Mower Safety

The following instructions have been adapted from EN 836.

This cutting machine is capable of amputating hands and feet and throwing objects. Failure to observe the following safety instructions could result in serious injury or death.

Training

- Read the instructions carefully. Be familiar with the controls and the proper use of the equipment.
- Never allow children or people unfamiliar with these instructions to use the mower. Local regulations can restrict the age of the operator.
- Keep in mind that the operator or user is responsible for accidents or hazards occurring to other people or their property.
- Understand explanations for all pictograms used on the mower or in the instructions.

Gasoline

WARNING-Gasoline is highly flammable. Take the following precautions.

- Store fuel in containers specifically designed for this purpose.
- Refuel outdoors only and do not smoke while refueling.
- Add fuel before starting the engine. Never remove the cap of the fuel tank or add gasoline while the engine is running or when the engine is hot.
- If gasoline is spilled, do not attempt to start the engine but move the mower away from the area of spillage and avoid creating any source of ignition until gasoline vapors have dissipated.
- Replace all fuel tank and container caps securely.

Preparation

- While mowing, always wear substantial footwear and long trousers. Do not operate the equipment when barefoot or wearing open sandals.
- Thoroughly inspect the area where the equipment is to be used and remove all stones, sticks, wires, bones and other foreign objects.
- Before using, always visually inspect to see that guards, and safety devices, such as deflectors and/or grass catchers, are in place and working correctly.
- Before using, always visually inspect to see that the blades, blade bolts and cutter assembly are not worn or damaged. Replace worn or damaged blades and bolts in sets to preserve balance.

Starting

- Disengage all blade and drive clutches and shift into neutral before starting the engine.
- Do not tilt mower when starting the engine or switching on the motor, unless the mower has to be tilted for starting. In this case, do not tilt it more than absolutely necessary and lift only the part, which is away from the operator.
- Start the engine or switch on the motor carefully according to instructions and with feet well away from the blade(s) and not in front of the discharge chute.

Operation

- Never mow while people, especially children, or pets are nearby.
- Mow only in daylight or in good artificial light.
- Stay alert for holes in the terrain and other hidden hazards.
- Do not put hands or feet near or under rotating parts. Keep clear of the discharge opening at all times.
- Never pick up or carry a lawn mower while the engine is running.
- Use extreme caution when reversing or pulling a pedestrian controlled lawn mower towards you.
- Walk, never run.
- Slopes:
  - Do not mow excessively steep slopes.
  - Exercise extreme caution when on slopes.
  - Mow across the face of slopes, never up and down and exercise extreme caution when changing direction on slopes.
  - Always be sure of your footing on slopes.
- Stop the blade if the lawn mower has to be tilted for transportation when crossing surfaces other than grass and when transporting the lawn mower to and from the area to be mowed.
- Do not operate the engine in a confined space where dangerous carbon monoxide fumes can collect.
- Stop the engine
  - whenever you leave the lawn mower.
  - before refueling.
  - before removing the grass catcher.

  - before making height adjustment unless adjustment can be made from the operator's position.
- Stop the engine and disconnect the spark-plug wire.
  - before clearing blockages or unclogging chute.
  - before checking, cleaning or working on the lawn mower.
  - after striking a foreign object, inspect the lawn mower for damage and make repairs before restarting and operating the lawn mower.
  - if lawn mower starts to vibrate abnormally (check immediately).
- Lightning can cause severe injury or death. If you see lightning or hear thunder in the area, do not operate the machine; seek shelter.
- Watch out for traffic when crossing or near roadways.

Maintenance and Storage

- Keep all nuts, bolts and screws tight to be sure the equipment is in safe working condition.
- Do not use pressure cleaning equipment on machine.
- Never store the equipment with gasoline in the tank and inside a building where fumes can reach an open flame or spark.
- Allow the engine to cool before storing in any enclosure.
- To reduce the fire hazard, keep the engine, silencer, battery compartment and gasoline storage area free of grass, leaves, or excessive grease.
- Check grass catcher components and the discharge guard frequently and replace with manufacturer's recommended parts, when necessary.
- Replace worn or damaged parts for safety.
- Replace faulty silencers.
- If the fuel tank has to be drained, do this outdoors.
- Do not change the engine governor settings or overspeed the engine. Operating an engine at excessive speed can increase the hazard of personal injury.
- On multibladed lawn mowers, take care as rotating one blade may cause others to rotate.
- Be careful during adjustment of the lawn mower to prevent entrapment of the fingers between moving blades and fixed parts of the lawn mower.
- **To ensure the best performance and safety, purchase only genuine Toro replacement parts and accessories. Do not use *will fit* parts and accessories; they may cause a safety hazard.**

Sound Pressure

This unit has a sound pressure level at the operator's ear of 86 dBA, which includes an Uncertainty Value (K) of 1 dBA.

Sound pressure level was determined according to the procedures outlined in EN ISO 11201.

Sound Power

This unit has a guaranteed sound power level of 96 dBA, which includes an Uncertainty Value (K) of 1 dBA.

Sound power level was determined according to the procedures outlined in ISO 11094.

Hand-Arm Vibration

Model 21080

Measured vibration level for left hand = 3.1 m/s^2

Measured vibration level for right hand = 2.2 m/s^2

Uncertainty Value (K) = 1.6 m/s^2

Measured values were determined according to the procedures outlined in EN 1032.

Model 21090

Measured vibration level for left hand = 3.0 m/s^2

Measured vibration level for right hand = 1.7 m/s^2

Uncertainty Value (K) = 1.5 m/s^2

Measured values were determined according to the procedures outlined in EN 1032.

Safety and Instructional Decals

Important: **Safety and instruction decals are located near areas of potential danger. Replace damaged decals.**

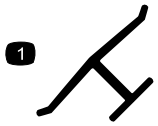

Manufacturer's Mark

1. Indicates the blade is identified as a part from the original machine manufacturer.

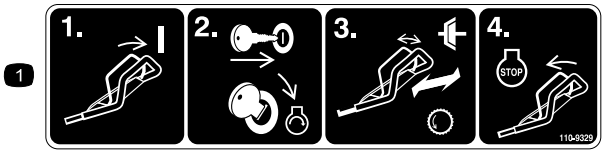

110-9329

1. To operate the machine, engage the bail, insert the ignition key and start the engine, operating the bail engages the clutch and the handle assembly engages the traction drive, release the bail to stop the engine.

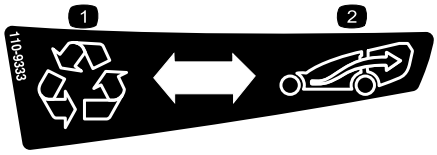

110-9333

1. Recycle
2. Collect

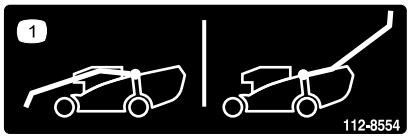

112-8554

1. Handle release

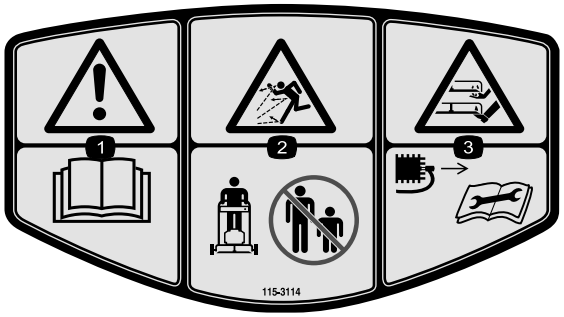

115-3114

1. Read the *Operator's Manual.*
2. Thrown object hazard—keep bystanders a safe distance from the machine.
3. Cutting/dismemberment of hand or foot, mower blade—remove the spark plug wire and read the instructions before servicing or performing maintenance.

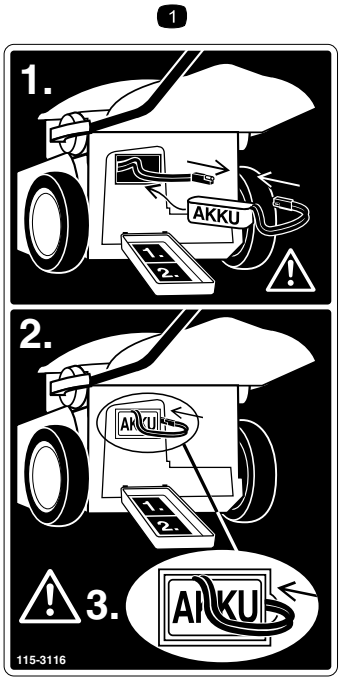

115-3116

1. Installing the battery.

Setup

1

Assembling and Unfolding the Handle

No Parts Required

Procedure

⚠ WARNING

Assembling and unfolding the handle improperly can damage the cables, causing an unsafe operating condition.

- **Do not damage the cables when assembling and unfolding the handle.**
- **Ensure that the cables are routed to the outside of the handle.**
- **If a cable is damaged, contact an Authorized Service Dealer.**

1. Unlock the handle locks, move the handle sections into the operating position, attach the upper handle to the lower handle, and lock the handle locks (Figure 3).

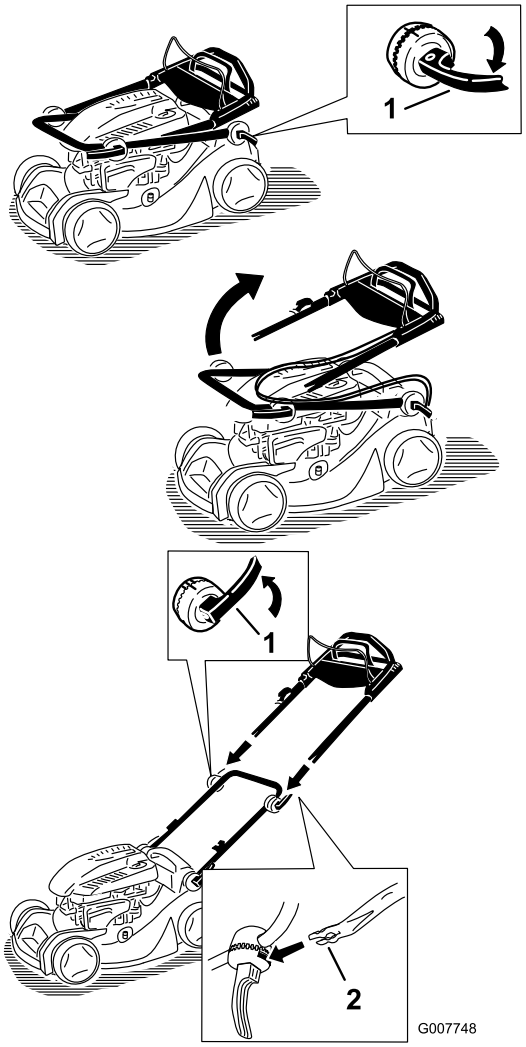

Figure 3

1. Handle lock (4)
2. Upper handle end

2. To adjust the handle height, unlock the upper handle locks and rotate the upper handle upward and lock it into a position that is comfortable for you (Figure 4).

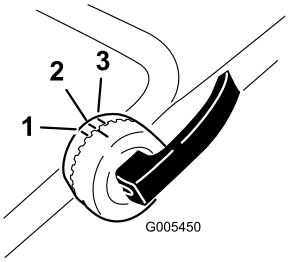

Figure 4

1. Highest position
2. Middle position
3. Lowest position

Note: You can set the upper handle to 1 of 3 handle positions. Line up the mark to one of the 3 marks on the inner side of the upper handle locks (Figure 4).

Note: If a handle lever is loose, open the lever, rotate it clockwise 1 or 2 turns to tighten it, then close the lever (Figure 5).

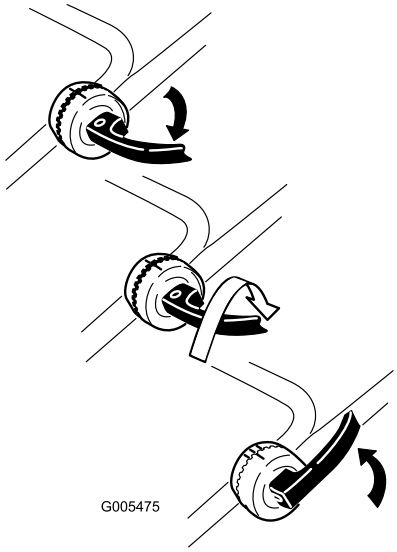

Figure 5

2

Installing the Starter Rope

No Parts Required

Procedure

Pull the starter rope through the rope guide on the handle (Figure 6).

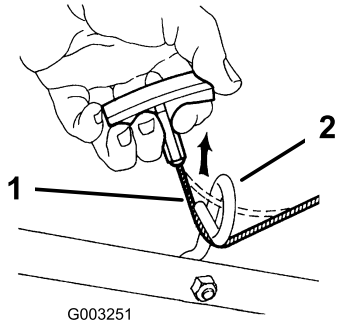

Figure 6

1. Starter rope
2. Rope guide

Note: To make the rope easier to install, squeeze the control bar on the handle.

3

Assembling the Grass Bag

No Parts Required

Procedure

Attach the lip onto the front of the grass bag frame as shown in (Figure 7).

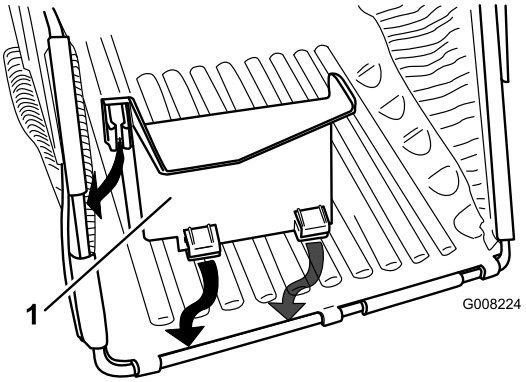

Figure 7

1. Lip

4

Filling the Engine with Oil

No Parts Required

Procedure

Important: Your mower does not come with oil in the engine.

1. Remove the dipstick (Figure 8).

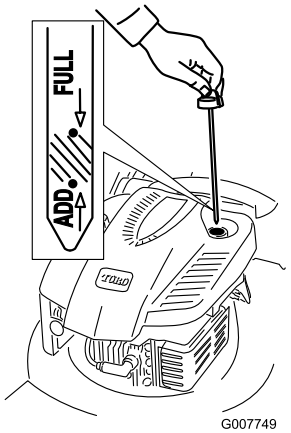

Figure 8

2. **Slowly** pour oil into the oil fill tube until the oil level reaches the **Full** mark on the dipstick (Figure 8). **Do not overfill.** (Max. fill: 0.59 l, type: SAE 30 detergent oil with an API service classification of SF, SG, SH, SJ, SL, or higher.)
3. Install the dipstick securely.

Important: ***Change the engine oil after the first 5 operating hours*; change it yearly thereafter. Refer to Changing the Engine Oil.**

5

Installing the Fuse

No Parts Required

Procedure

Model 21027 only

Your mower comes with a 40-amp fuse that protects the electric starter.

Important: You cannot start the mower with the electric starter or charge the battery unless you install the fuse.

1. Open the battery cover (Figure 9).

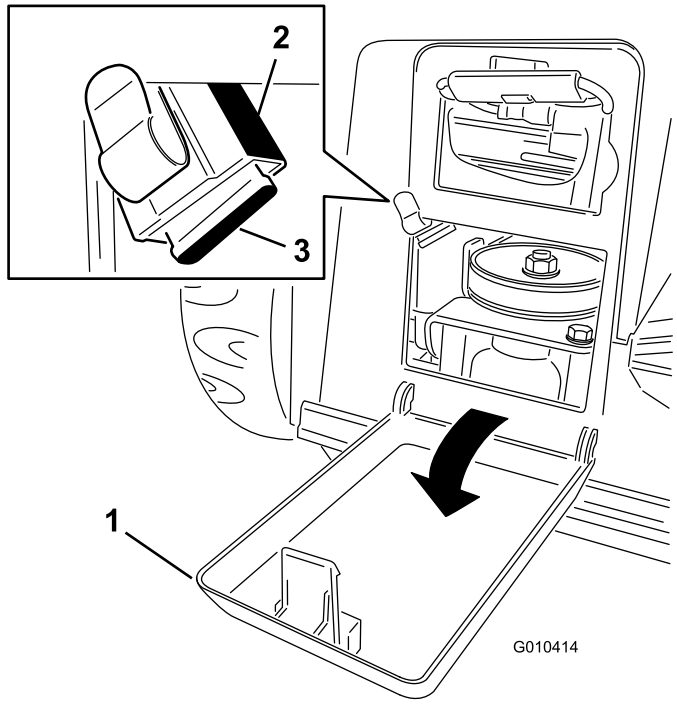

Figure 9

1. Battery cover
2. Fuse holder
3. Fuse

2. Locate the fuse holder from the upper left corner of the opening to the battery compartment (Figure 9).

   Note: The wire to the fuse holder is short; you will not be able to pull the fuse holder fully out of the battery compartment.
3. Install the fuse in the fuse holder (Figure 10).

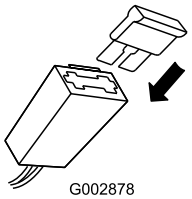

Figure 10

Note: Your mower comes with a fuse in the your owner's packet.

4. Install the battery cover.

6

Charging the Battery

No Parts Required

Procedure

Model 21027 only

Refer to Charging the Battery in the Maintenance section.

Product Overview

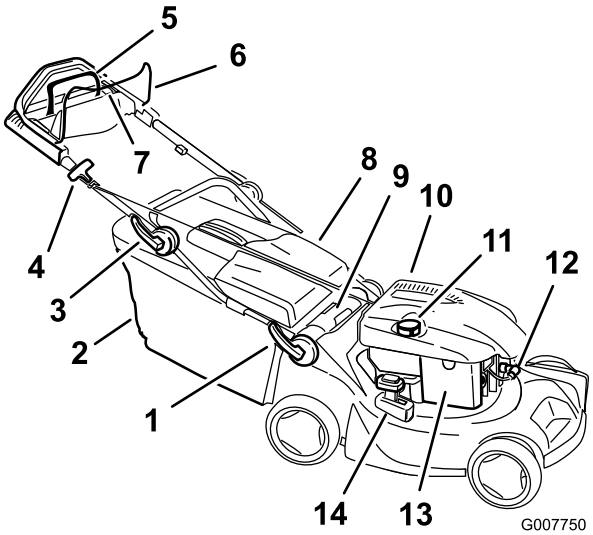

Figure 11

Model 21027 shown

1. Lower handle lock (2)
2. Grass bag
3. Upper handle lock (2)
4. Recoil start handle
5. Traction assist handle
6. Blade control bar
7. Ignition key (model 21027 only)
8. Rear door
9. Cutting height adjustment handle
10. Oil fill/Dipstick (not shown)
11. Fuel tank cap
12. Spark plug
13. Air filter
14. Recycling/bagging lever

Specifications

Model	Weight	Length	Width	Height
21026	73 lb (33 kg)	65 in (165 cm)	19 in (48 cm)	43 in (109 cm)
21027	73 lb (33 kg)	65 in (165 cm)	19 in (48 cm)	43 in (109 cm)

Operation

Filling the Fuel Tank

⚠ DANGER

Gasoline is extremely flammable and explosive. A fire or explosion from gasoline can burn you and others.

- **To prevent a static charge from igniting the gasoline, place the container and/or mower directly on the ground before filling, not in a vehicle or on an object.**
- **Fill the tank outdoors when the engine is cold. Wipe up spills.**
- **Do not handle gasoline when smoking or around an open flame or sparks.**
- **Store gasoline in an approved fuel container, out of the reach of children.**

Fill the fuel tank with fresh unleaded regular gasoline from a major name-brand service station (Figure 12).

Important: To reduce starting problems, add fuel stabilizer to the fuel all season, mixing it with gasoline less than 30 days old.

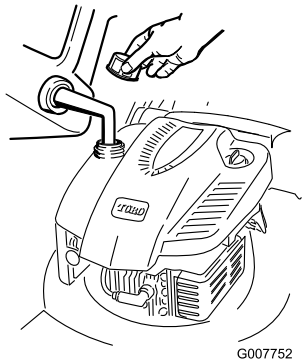

Figure 12

Checking the Engine Oil Level

Service Interval: Before each use or daily

1. Remove the dipstick, wipe it clean, and fully install the dipstick (Figure 8).
2. Remove the dipstick and check the oil level (Figure 8). If the oil level is below the **Add** mark on the dipstick, **slowly** pour oil into the oil fill tube to raise the oil level to the **Full** mark on the dipstick. **Do not overfill.** (Max. fill: 0.59 l, type: SAE 30 detergent oil with an API service classification of SF, SG, SH, SJ, SL, or higher.)
3. Install the dipstick.

Adjusting the Cutting Height

You can adjust the mower to cut grass at any height from 2.2 cm to 7.6 cm.

⚠ WARNING

Adjusting the cutting height may bring you into contact with the moving blade, causing serious injury.

- **Stop the engine and wait for all moving parts to stop.**
- **Do not put your fingers under the housing when adjusting the cutting height.**

⚠ CAUTION

If the engine has been running, the muffler will be hot and can severely burn you. Keep away from the hot muffler.

- Cut the grass at the C, D, or E settings. **Do not attempt to recycle the grass at the A or B settings.**
- Do not cut below the C setting unless the grass is sparse or it is late fall when grass growth begins to slow down. When you cut long grass, use a higher cutting height setting and walk slower; then cut the grass again at a normal setting. Mowing the grass when it is too long can plug the lawn mower and cause the engine to stall.

Note: The SmartWheel® calculates the proper setting to ensure that you cut no more than a third of the grass blade (Figure 13).

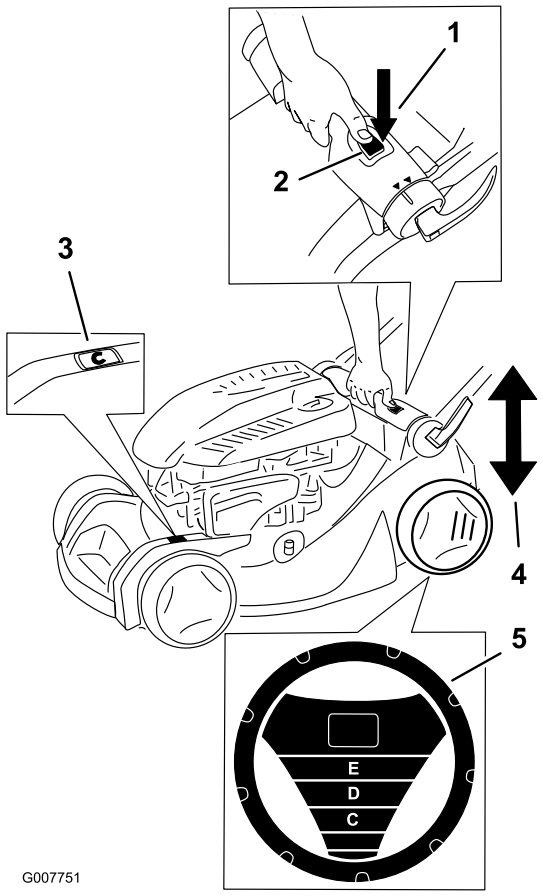

Figure 13

1. Cutting height adjustment handle
2. Cutting height adjustment button
3. Cutting height scale
4. Raise or lower the mower
5. Smart Wheel

1. Stop the engine and wait for all moving parts to stop.
2. Move the mower into the grass; stop moving the mower when the SmartWheel design is upright (Figure 13).
3. Use the SmartWheel design to compare the tips of the grass blades to the letters on the wheel. The letter on the SmartWheel that matches the tips of the grass blades is the proper cutting height.
4. Press down on the cutting height adjustment button and hold the cutting height adjustment handle to move the cutting height up or down (Figure 13).
5. Lift up or press down on the handle, and use the cutting height scale to set the lawn mower to the desired cutting height (Figure 13).

Starting the Engine

1. Hold the blade control bar against the handle (Figure 14).

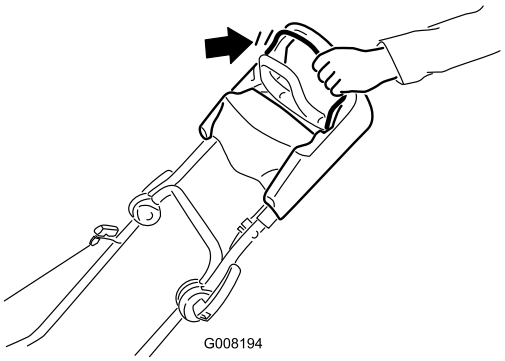

Figure 14

2. Pull the recoil starter (Figure 15) or turn the ignition key as shown in Figure 16 (model 21027 only).

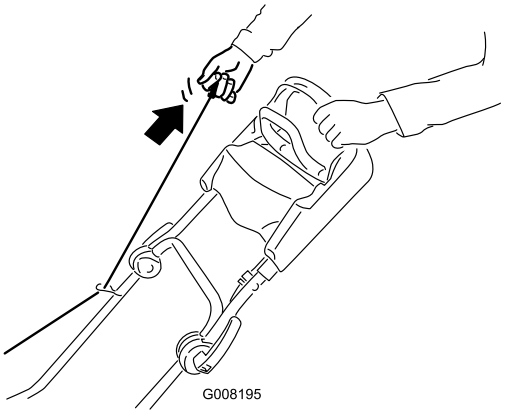

Figure 15

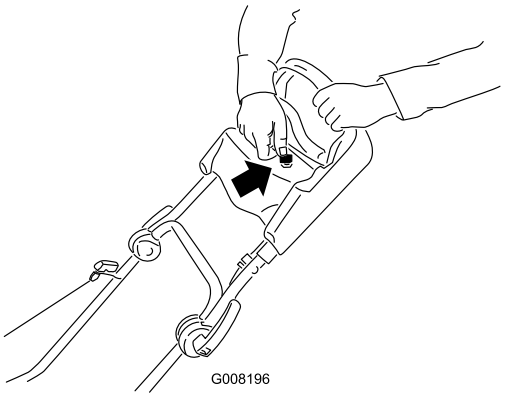

Figure 16

Note: If the mower does not start, contact an Authorized Service Dealer.

Using the Self-propel Drive

To operate the self-propel drive, simply walk with your hands on the upper handle and your elbows at your sides, and the mower will automatically keep pace with you (Figure 17).

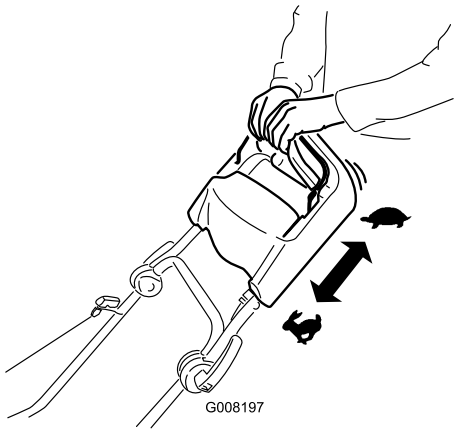

Figure 17

Stopping the Engine

1. Release the blade control bar (Figure 18).

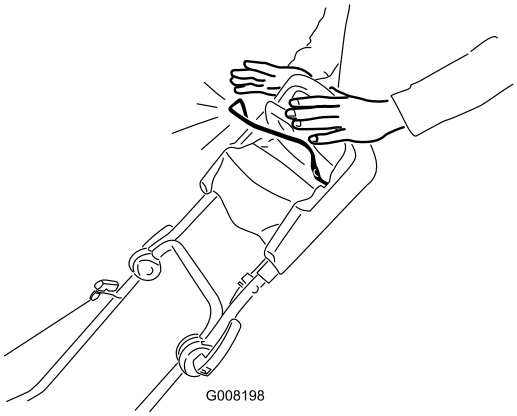

Figure 18

2. When the engine stops, remove the ignition key when you leave the mower.

   Important: When you release the blade control bar, both the engine and blade should stop within 3 seconds. If they do not stop properly, stop using your mower immediately and contact an Authorized Service Dealer.

Recycling the Clippings

Your mower comes from the factory ready to recycle the grass and leaf clippings back into the lawn.

Note: The grass bag may remain on the mower while you are recycling the clippings.

1. Stop the engine and wait for all moving parts to stop.
2. Press the button on top of the Recycling/bagging lever and move the lever to the **recycling** mode (Figure 19).

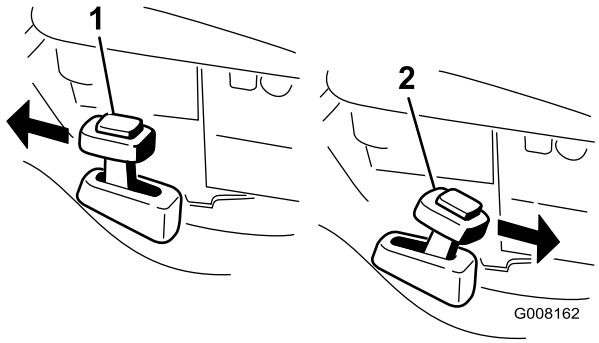

Figure 19

1. Recycling mode
2. Bagging mode

Bagging the Clippings

Use the grass bag when you want to collect grass and leaf clippings from the lawn.

⚠ WARNING

A worn grass bag could allow small stones and other similar debris to be thrown in the operator's or bystander's direction and result in serious personal injury or death to the operator or bystanders.

Check the grass bag frequently. If it is damaged, install a new Toro replacement bag.

⚠ WARNING

The blade is sharp; contacting the blade can result in serious personal injury.

Stop the engine and wait for all moving parts to stop before leaving the operating position.

1. Stop the engine and wait for all moving parts to stop.
2. To bag the grass clippings, install the grass bag (refer to Installing the Grass Bag). Press the button on top of the Recycling/bagging lever and move the lever to the **bagging** mode (Figure 19).

Installing the Grass Bag

1. Stop the engine and wait for all moving parts to stop.
2. Raise and hold up the rear door, install the bag on the handle, and lower the rear door (Figure 20).

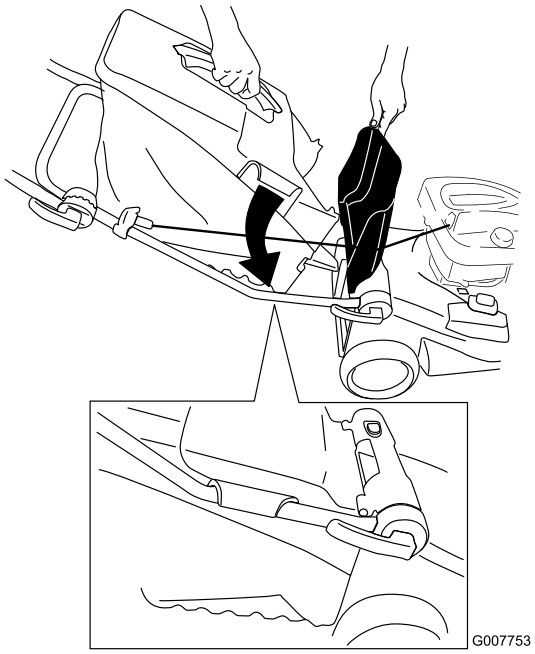

Figure 20

Removing the Grass Bag

1. Stop the engine and wait for all moving parts to stop.
2. Lift up the grass bag up and away from the handle.

   Note: Tilt the grass bag slightly backward to prevent the collected grass clippings from falling out.

Rear-discharging the Clippings

Use the rear discharge for cutting very tall grass.

If the bag is on the mower, remove it (refer to Removing the Grass Bag) before rear-discharging the clippings (Figure 21).

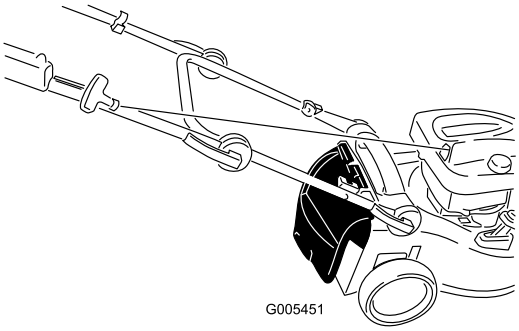

Figure 21

Note: The Recycling/bagging lever should be in the **bagging** mode (Figure 19).

⚠ WARNING

The blade is sharp; contacting the blade can result in serious personal injury.

Stop the engine and wait for all moving parts to stop before leaving the operating position.

Operating Tips

General Mowing Tips

- Clear the area of sticks, stones, wire, branches, and other debris that the blade could hit.
- Avoid striking solid objects with the blade. Never deliberately mow over any object.
- If the mower strikes an object or starts to vibrate, immediately stop the engine, disconnect the wire from the spark plug, and examine the mower for damage.
- For best performance, install a new blade before the cutting season begins.
- Replace the blade when necessary with a Toro replacement blade.

Cutting Grass

- Cut only about a third of the grass blade at a time. Do not cut below the C setting unless the grass is sparse or it is late fall when grass growth begins to slow down. Refer to Adjusting the Cutting Height.

- When cutting grass over 15 cm tall, mow at the highest cutting height setting and walk slower; then mow again at a lower setting for the best lawn appearance. If the grass is too long, the mower may plug and cause the engine to stall.
- Mow only dry grass or leaves. Wet grass and leaves tend to clump on the yard and can cause the mower to plug or the engine to stall.

⚠ WARNING

Wet grass or leaves can cause serious injury if you slip and contact the blade. Mow only in dry conditions.

- Alternate the mowing direction. This helps disperse the clippings over the lawn for even fertilization.
- If the finished lawn appearance is unsatisfactory, try one or more of the following:
  - Replace the blade or have it sharpened.
  - Walk at a slower pace while mowing.
  - Raise the cutting height on your mower.
  - Cut the grass more frequently.
  - Overlap cutting swaths instead of cutting a full swath with each pass.
  - Set the cutting height on the front wheels one notch lower than the rear wheels. For example, set the front wheels at the C setting and the rear wheels at the D setting.

Cutting Leaves

- After cutting the lawn, ensure that half of the lawn shows through the cut leaf cover. You may need to make more than one pass over the leaves.
- If there are more than 13 cm of leaves on the lawn, set the front cutting height one or two notches higher than the rear cutting height.
- Slow down your mowing speed if the mower does not cut the leaves finely enough.

Maintenance

Note: Determine the left and right sides of the machine from the normal operating position.

Recommended Maintenance Schedule(s)

Maintenance Service Interval	Maintenance Procedure
After the first 5 hours	• Change the engine oil.
Before each use or daily	• Check the engine oil level. • Ensure that the engine stops within 3 seconds after releasing the blade control bar. • Clean the mower.
Every 25 hours	• Charge the battery for 24 hours (model 21027 only). • Replace the blade or have it sharpened (more frequently if the edge dulls quickly).
Every 50 hours	• Change the engine oil.
Every 100 hours	• Clean the cooling system (refer to your engine owner's manual). • Replace the spark plug (refer to your engine owner's manual).
Before storage	• Empty the fuel tank before repairs as directed and before annual storage.
Yearly	• Replace the air filter (more frequently in dusty operating conditions). • Check the spark plug (refer to your engine owner's manual). • Lubricate the wheel gears. • Refer to your Engine Operator's Manual for any additional yearly maintenance procedures.

Important: Refer to your *Engine Operator's Manual* for additional maintenance procedures.

Preparing for Maintenance

1. Stop the engine and wait for all moving parts to stop.
2. Disconnect the spark plug wire from the spark plug (Figure 22) before performing any maintenance procedure.

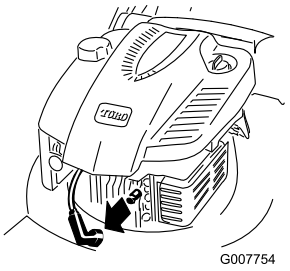

Figure 22

3. After performing the maintenance procedure(s), connect the spark plug wire to the spark plug.

Important: Before tipping the mower to change the oil or replace the blade, allow the fuel tank to run dry through normal usage. If you must tip the mower prior to running out of fuel, use a hand fuel pump to remove the fuel. Always tip the mower onto its side with the air filter up.

⚠ WARNING

Tipping the mower may cause the fuel to leak. Gasoline is flammable, explosive and can cause personal injury.

Run the engine dry or remove the gasoline with a hand pump; never siphon.

Replacing the Air Filter

Service Interval: Yearly

1. Perform the pre-maintenance procedures; refer to Preparing for Maintenance.
2. Open the air filter cover and remove the old air filter (Figure 23).

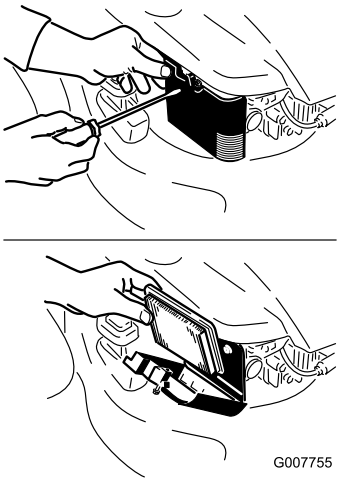

Figure 23

3. Install a new air filter and the air filter cover.

Changing the Engine Oil

Service Interval: After the first 5 hours

Every 50 hours

Run the engine a few minutes before changing the oil to warm it. Warm oil flows better and carries more contaminants.

1. Perform the pre-maintenance procedures; refer to Preparing for Maintenance.
2. Remove the dipstick (Figure 8).
3. Tip the mower onto its side, with the air filter up, to drain the used oil out through the oil fill tube (Figure 24).

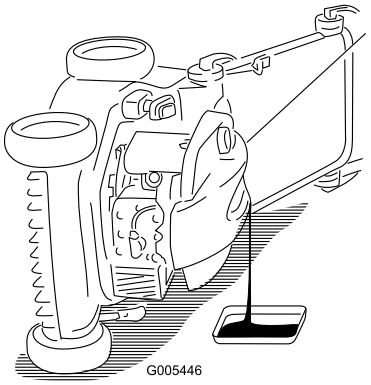

Figure 24

4. After draining the oil, return the mower to its operating position.
5. **Slowly** pour oil into the oil fill tube until the oil level reaches the **Full** mark on the dipstick (Figure 8). **Do not overfill.** (Max. fill: 0.59 l, type: SAE 30 detergent oil with an API service classification of SF, SG, SH, SJ, SL, or higher.)
6. Install the dipstick securely.
7. Dispose of the used oil properly at a local recycling center.

Charging the Battery

Service Interval: Every 25 hours

Model 21027 only

Always use the charger in a sheltered area and charge the battery for 24 hours at room temperature (22° C) whenever possible.

1. Open the cover to the battery compartment (Figure 25).

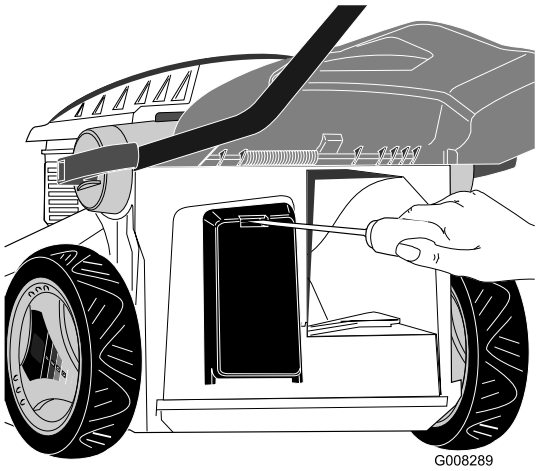

Figure 25

2. Remove the battery from the compartment and disconnect the battery cable from the mower cable (Figure 26).

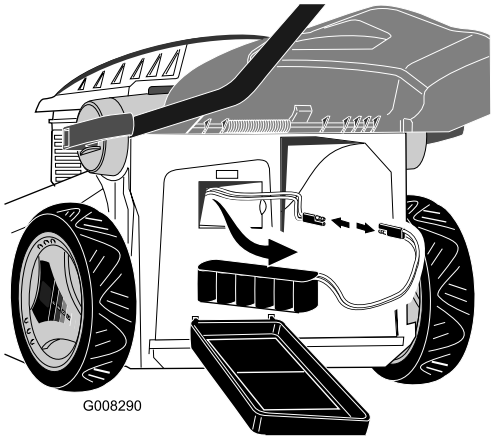

Figure 26

3. Connect the charger to the battery (Figure 27).

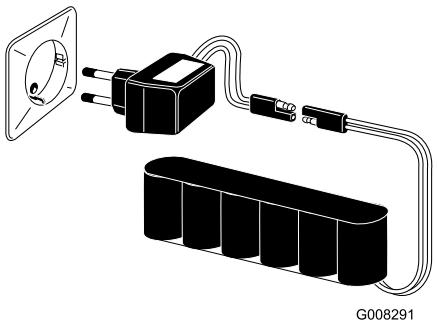

Figure 27

4. Plug the charger into a wall outlet and charge the battery for **24 hours** (Figure 27).

   Note: When the battery no longer holds a charge, recycle or dispose of the lead-acid battery according to local codes.

5. Connect the battery cable to the mower cable and install the battery in the compartment.
6. Secure the cover to the battery compartment.

Replacing the Fuse

Model 21027 only

If the battery does not charge or the engine does not turn with the electric starter, the fuse may be blown. Replace it with a 40-amp plug-in type fuse. Refer to Installing the Fuse.

Lubricating the Wheel Gears

Service Interval: Yearly

1. Remove the wheel bolts on the **rear** wheels and remove the rear wheels.
2. Apply a lubricating oil to the gear as shown in Figure 28.

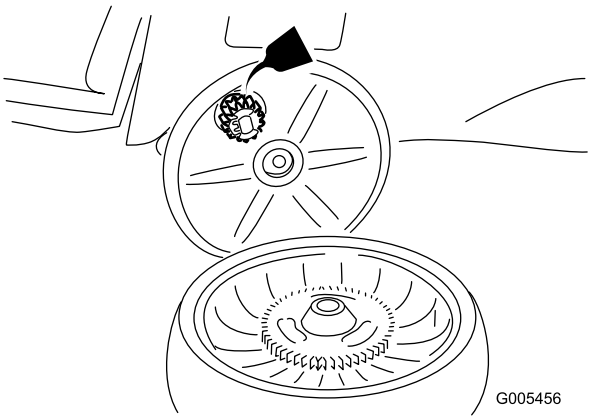

Figure 28

3. Install the rear wheels.

Adjusting the Self-propel Drive

If your mower does not self-propel properly, adjust the self-propel drive cable.

1. Loosen the locking nut by hand (Figure 29).

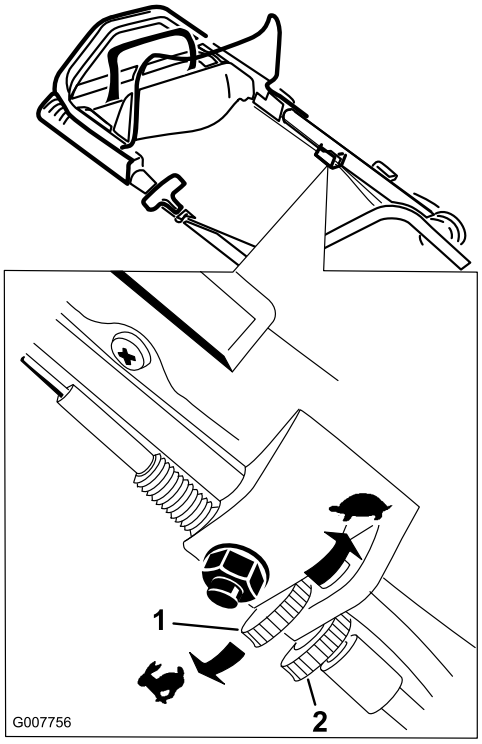

Figure 29

1. Adjusting nut
2. Locking nut

2. Use the adjusting nut to adjust the self propel drive.
   - If the rear wheels do not rotate backward when you pull the mower backward, turn the adjusting nut 1 to 3 turns **counterclockwise** (from the operating position), depending on the amount of correction needed.
   - If the mower does not self-propel, turn the adjusting nut 1 to 3 turns **clockwise** (from the operating position), depending on the amount of correction needed.
3. Start the mower and use the self-propel drive to check the adjustment.

   Note: If the self-propel drive is not properly adjusted, repeat step 2.
4. When the self-propel drive is properly adjusted, tighten the adjusting nut by hand.

Note: If your mower still does not properly self-propel after performing this procedure, contact an Authorized Service Dealer.

Replacing the Blade

Service Interval: Every 25 hours—Replace the blade or have it sharpened (more frequently if the edge dulls quickly).

Important: ***You will need a torque wrench to install the blade properly*. If you do not have a torque wrench or are uncomfortable performing this procedure, contact an Authorized Service Dealer.**

Examine the blade whenever you run out of gasoline. If the blade is damaged or cracked, replace it immediately. If the blade edge is dull or nicked, have it sharpened or replace it.

⚠ WARNING

The blade is sharp; contacting the blade can result in serious personal injury.

Wear gloves when servicing the blade.

1. Disconnect the spark plug wire from the spark plug. Refer to Preparing for Maintenance.
2. Tip the mower onto its side with the air filter up (Figure 30).

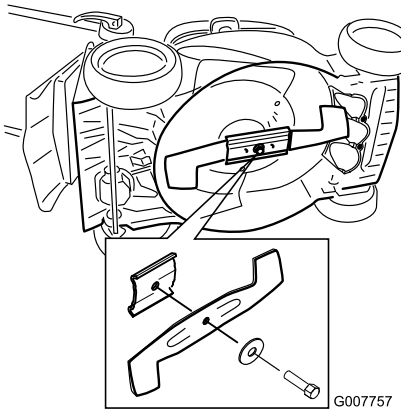

Figure 30

3. Remove the blade, saving all mounting hardware.
4. Install the new blade and all mounting hardware.

   Important: Position the curved ends of the blade to point toward the mower housing.
5. **Use a torque wrench to tighten the blade bolt to 50 N-m.**

   Important: While holding the blade with a block of wood, put your weight behind the ratchet or wrench and tighten the bolt securely.

Emptying the Fuel Tank

1. Stop the engine and wait for it to cool down
2. Disconnect the wire from the spark plug.
3. Remove the cap from the fuel tank.
4. Use a hand pump to syphon the fuel into a clean approved gasoline container.
5. Connect the wire to the spark plug.

6. Run the engine until it stops.
7. Start the engine again to make sure that all the gasoline is out of the carburetor.

Cleaning the Mower

Washing Method

Service Interval: Before each use or daily—Clean the mower.

⚠ WARNING

The mower may dislodge material from under the mower housing.

- **Wear eye protection.**
- **Stay in the operating position (behind the handle) when the engine is running.**
- **Do not allow bystanders in the area.**

For best results, clean the mower soon after you have completed mowing.

1. If the grass bag is on the mower, remove it.
2. Lower the mower to its lowest cutting height setting. Refer to Adjusting the Cutting Height.
3. Move the mower onto a flat paved surface.
4. Attach a garden hose that is connected to a water supply to the washout port on the mower housing (Figure 31).

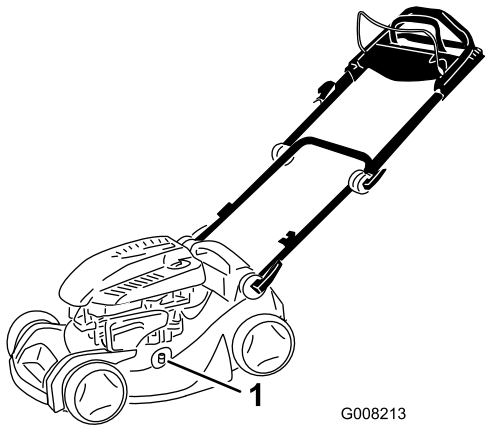

Figure 31

1. Washout port

5. Turn the water on.
6. Start the engine and run it until there are no more clippings that come out from under the mower housing.
7. Stop the engine.
8. Shut off the water and disconnect the garden hose from the mower.
9. Start the engine and run it for a few minutes to dry the housing to prevent it from rusting.

Scraping Method

⚠ WARNING

Tipping the mower may cause the fuel to leak from the carburetor or the fuel tank. Gasoline is extremely flammable, highly explosive, and, under certain conditions, can cause personal injury or property damage.

Run the engine dry or remove the fuel with a hand pump; never siphon the fuel.

1. Perform the pre-maintenance procedures; refer to Preparing for Maintenance.
2. Remove the grass bag.
3. Drain the fuel from the fuel tank.
4. Tip the mower onto its side with the air filter up.
5. Remove the dirt and grass clippings with a hardwood or plastic scraper. Avoid burrs and sharp edges.
6. Spray the underside of the mower housing with water.

   Important: Move the blade as little as possible to avoid future starting problems.

7. Turn the mower upright.

Storage

Store the mower in a cool, clean, dry place.

Preparing the Mower for Storage

⚠ WARNING

Gasoline vapors can explode.

- **Do not store gasoline more than 30 days.**
- **Do not store the mower in an enclosure near an open flame.**
- **Allow the engine to cool before storing it.**

1. On the last refueling of the year, add fuel stabilizer to the fuel as directed by the engine manufacturer.
2. Run the mower until the engine stops from running out of fuel.
3. Prime the engine and start it again.
4. Allow the engine to run until it stops. When you can no longer start the engine, it is sufficiently dry.
5. Disconnect the wire from the spark plug.
6. Remove the spark plug, add 30 ml of oil through the spark plug hole, and pull the starter rope slowly several times to distribute oil throughout the cylinder to prevent cylinder corrosion during the off-season.
7. Loosely install the spark plug.
8. Tighten all nuts, bolts, and screws.
9. Charge the battery for 24 hours, then unplug the battery charger an store the mower in an unheated area. If you must store the mower in a heated area, you must charge the battery every 90 days (model 21027 only).

Removing the Mower from Storage

1. Remove the spark plug and spin the engine rapidly using the starter to blow the excess oil from the cylinder.
2. Install the spark plug and tighten it with a torque wrench to 20 N-m.
3. Charge the battery for 24 hours (model 21027 only).
4. Connect the wire to the spark plug.

International Distributor List

Distributor:	Country:	Phone Number:
Atlantis Su ve Sulama Sisstemleri Lt	Turkey	90 216 344 86 74
Balama Prima Engineering Equip.	Hong Kong	852 2155 2163
B-Ray Corporation	Korea	82 32 551 2076
Casco Sales Company	Puerto Rico	787 788 8383
Ceres S.A.	Costa Rica	506 239 1138
CSSC Turf Equipment (pvt) Ltd.	Sri Lanka	94 11 2746100
Cyril Johnston & Co.	Northern Ireland	44 2890 813 121
Equiver	Mexico	52 55 539 95444
Femco S.A.	Guatemala	502 442 3277
G.Y.K. Company Ltd.	Japan	81 726 325 861
Geomechaniki of Athens	Greece	30 10 935 0054
Guandong Golden Star	China	86 20 876 51338
Hako Ground and Garden	Sweden	46 35 10 0000
Hako Ground and Garden	Norway	47 22 90 7760
Hayter Limited (U.K.)	United Kingdom	44 1279 723 444
Hydroturf Int. Co Dubai	United Arab Emirates	97 14 347 9479
Hydroturf Egypt LLC	Egypt	202 519 4308
Ibea S.P.A.	Italy	39 0331 853611
Irriamc	Portugal	351 21 238 8260
Irrigation Products Int'l Pvt Ltd.	India	86 22 83960789
Jean Heybroek b.v.	Netherlands	31 30 639 4611
Lely (U.K.) Limited	United Kingdom	44 1480 226 800
Maquiver S.A.	Colombia	57 1 236 4079
Maruyama Mfg. Co. Inc.	Japan	81 3 3252 2285
Metra Kft	Hungary	36 1 326 3880
Mountfield a.s.	Czech Republic	420 255 704 220
Munditol S.A.	Argentina	54 11 4 821 9999
Oslinger Turf Equipment SA	Ecuador	593 4 239 6970
Oy Hako Ground and Garden Ab	Finland	358 987 00733
Parkland Products Ltd.	New Zealand	64 3 34 93760
Prochaska & Cie	Austria	43 1 278 5100
RT Cohen 2004 Ltd.	Israel	972 986 17979
Riversa	Spain	34 9 52 83 7500
Roth Motorgerate GmBh & Co.	Germany	49 7144 2050
Sc Svend Carlsen A/S	Denmark	45 66 109 200
Solvert S.A.S.	France	33 1 30 81 77 00
Spypros Stavrinides Limited	Cyprus	357 22 434131
Surge Systems India Limited	India	91 1 292299901
T-Markt Logistics Ltd.	Hungary	36 26 525 500
Toro Australia	Australia	61 3 9580 7355
Toro Europe BVBA	Belgium	32 14 562 960

The Toro Warranty

Conditions and Products Covered

The Toro® Company and its affiliate, Toro Warranty Company, pursuant to an agreement between them, jointly promise to repair the Toro Product listed below if used for residential purposes* if defective in materials or workmanship.

The following time periods apply from the date of purchase:

Products	Warranty Period
Walk Power Mowers	2 year limited warranty
Rear Engine Riders	2 year limited warranty
Lawn & Garden Tractors	2 year limited warranty
Electric Hand Held Products	2 year limited warranty
Snowthrowers	2 year limited warranty
Consumer Zero Turn	2 year limited warranty

*Original Purchaser means the person who originally purchased the Toro Product

*Residential purposes means use of the product on the same lot as your home. Use at more than one location, or institutional or rental use, is considered commercial use, and the commercial use warranty would apply.

Limited Warranty for Commercial Use

Toro Consumer Products and attachments used for commercial, institutional, or rental use, are warranted against defects in materials or workmanship for the following time periods from the date of original purchase:

Products	Warranty Period
Walk Power Mowers	90 day warranty
Rear Engine Riders	90 day warranty
Lawn & Garden Tractors	90 day warranty
Electric Hand Held Products	90 day warranty
Snowthrowers	90 day warranty
Consumer Zero Turn	45 day warranty

Instructions for Obtaining Warranty Service

If you think that your Toro Product contains a defect in materials or workmanship, follow this procedure:

1. Contact your seller to arrange service of the product. If for any reason it is impossible for you to contact your seller, you may contact any Toro Authorized Distributor to arrange service.
2. Bring the product and your proof of purchase (sales receipt) to the Service Dealer. If for any reason you are dissatisfied with the Service Dealer's analysis or with the assistance provided, contact us at:

   Customer Care Department, Consumer Division
   The Toro Company
   8111 Lyndale Avenue South
   Bloomington, MN 55420-1196
   Manager: Technical Product Support: 001–952–887–8248

   See attached Distributor List

Owner Responsibilities

You must maintain your Toro Product by following the maintenance procedures described in the *Operator's Manual*. Such routine maintenance, whether performed by a dealer or by you, is at your expense.

Items and Conditions Not Covered

This express warranty does not cover the following:

- Cost of regular maintenance service or wear parts, such as rotor blades (paddles), scraper blades, belts, fuel, lubricants, oil changes, spark plugs, cable/linkage or brake adjustments
- Any product or part which has been altered or misused and requires replacement or repair due to accidents or lack of proper maintenance
- Repairs necessary due to failure to use fresh fuel (less than one month old), or failure to properly prepare the unit prior to any period of non-use over one month
- Engine and transmission. These are covered by the appropriate manufacturer's guarantees with separate terms and conditions

All repairs covered by these warranties must be performed by an Authorized Toro Service Dealer using Toro approved replacement parts.

General Conditions

The purchaser is covered by the national laws of each country. The rights to which the purchaser is entitled with the support of these laws are not restricted by this warranty.