FORM NO. 3318–301 REV.A

TORO®

**MODEL NO. 51557–6900001 & UP**

**PARTS CATALOG**

# SUPER BLOWER VAC, EUROPE

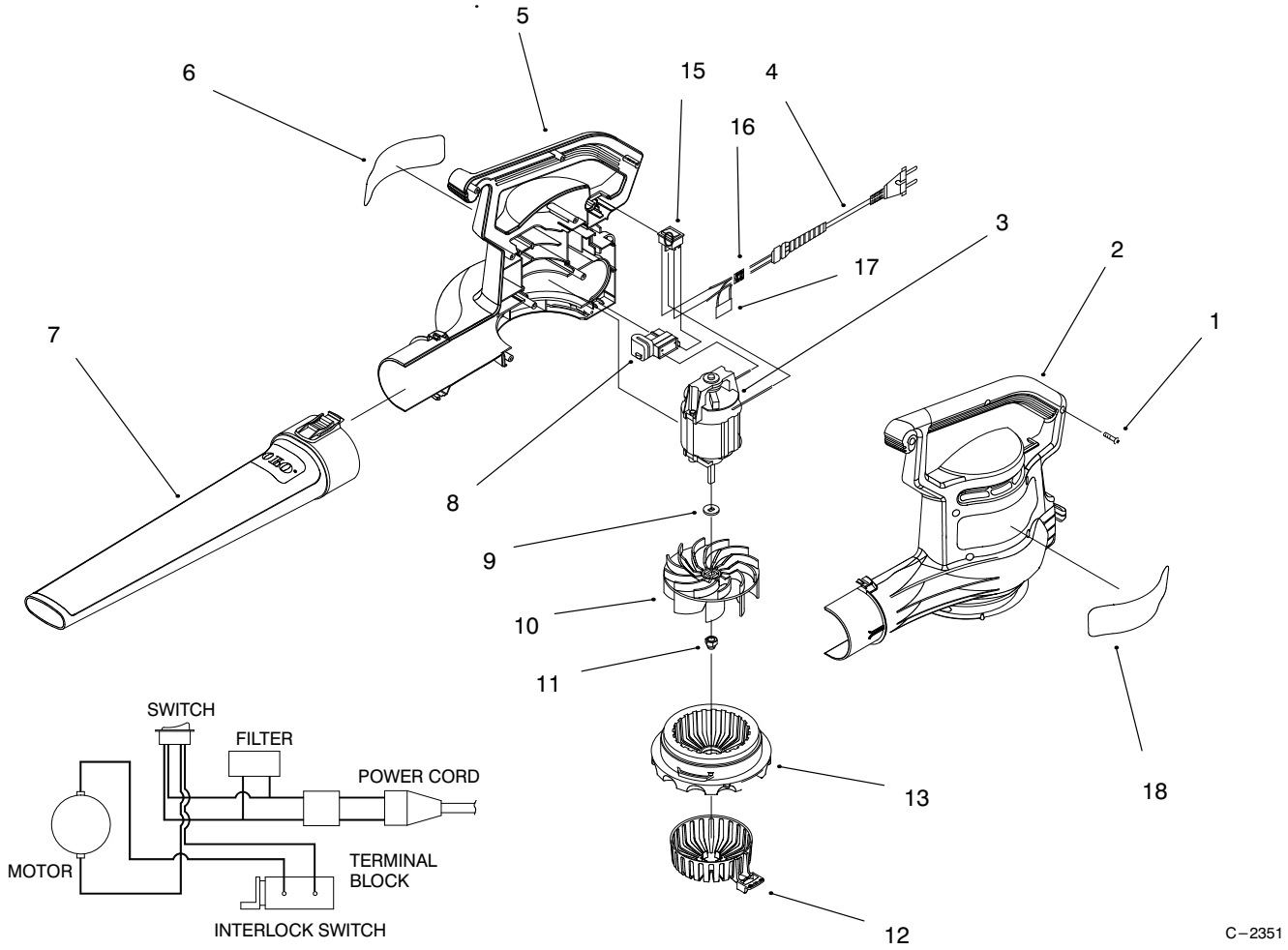


## BLOWER ASSEMBLY

| Ref. No. | Part No. | Description | No. Used |
|---|---|---|---|
| 1 | 94–4496 | Screw–PH Tap | 9 |
| 2 | 93–8719 | Housing – LH | 1 |
| 3 | 93–8733 | Motor | 1 |
| 4 | 93–0556 | Cord – Supply | 1 |
| 5 | 93–8720 | Housing – RH | 1 |
| 6 | 93–0579 | Decal – Logo | 1 |
| 7 | 93–0571 | Tube – Blower | 1 |
| 8 | 93–0598 | Switch – Interlock | 1 |
| 9 | 93–0585 | Washer | 1 |
| 10 | 93–0564 | Impeller | 1 |

| Ref. No. | Part No. | Description | No. Used |
|---|---|---|---|
| 11 | 93–9993 | Nut – Impeller | 1 |
| 12 | 93–0559 | Choke – Air | 1 |
| 13 | 93–0569 | Cover – Inlet | 1 |
| 15 | 93–7646 | Switch – Power | 1 |
| 16 | 93–8745 | Terminal Block | 1 |
| 17 | 93–8459 | Filter – RFI | 1 |
| 18 | 93–9916 | Decal – Warning | 1 |
| * | 93–8745 | Harness – Blower (Incl. Ref. # 4,15–17) | 1 |

* Not Illustrated

© The TORO Company –1995, Rev. 1996
*All Rights Reserved*

TPS

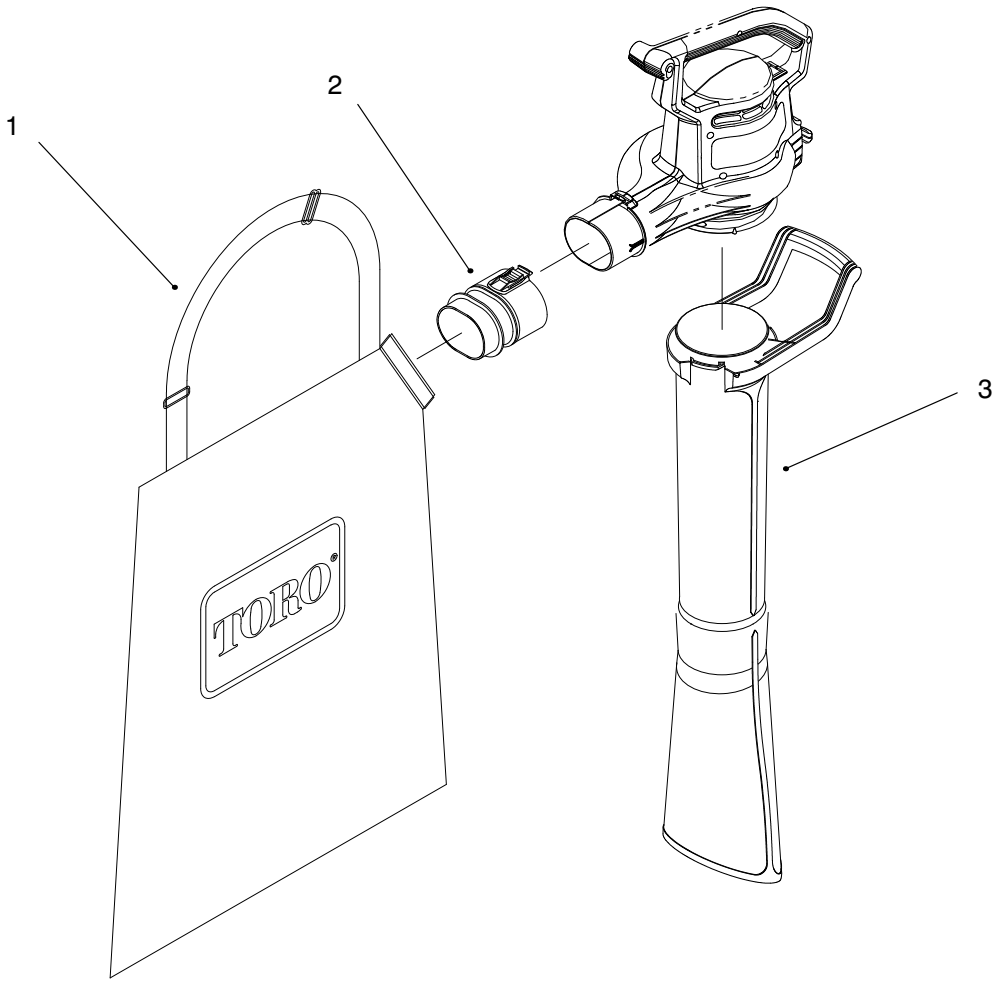


C−2352

# VACUUM TUBE AND BAG ASSEMBLY

| Ref. No. | Part No. | Description | No. Used |
|---|---|---|---|
| 1 | 93−0583 | Bag | 1 |
| 2 | 93−0574 | Tube − Bag Inlet | 1 |

| Ref. No. | Part No. | Description | No. Used |
|---|---|---|---|
| 3 | 93−7648 | Tube Asm | 1 |