Form No. 3365-430 Rev A

Rear Discharge Kit

DH 140 Lawn Tractor

Model No. 117-0054

Installation Instructions

Loose Parts

Use the chart below to verify that all parts have been shipped.

Description	Qty.	Use
Rear deflector assembly	1	Install the rear deflector kit.
Bracket	2	
Screw	4	

Installing the Rear Discharge Kit

1. If the grass collector is installed on the tractor, remove the collector.
2. Drill 4 holes (4 mm diameter) into the rear plate of the tractor at the locations shown in Figure 1.

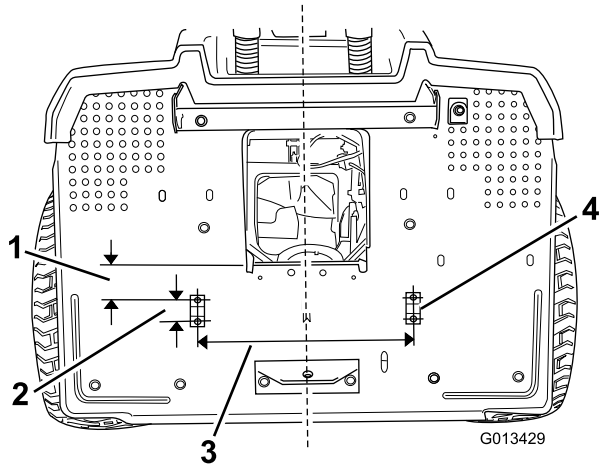

Figure 1

1. 59 mm
2. 35 mm
3. 345 mm
4. Lower bracket and screws (2)

3. Install the 2 brackets and 4 screws as shown in Figure 1.
4. Hang the deflector onto the brackets at the top of the rear plate (Figure 2).

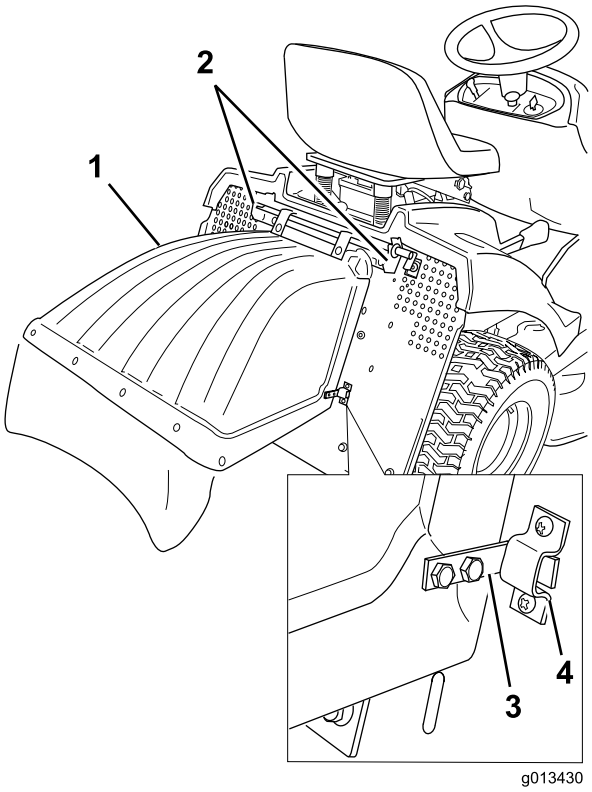

Figure 2

1. Deflector
2. Brackets
3. Hook (2)
4. lower bracket (2)

5. Press the side panels of the deflector inward until the hooks are inserted into the lower brackets.

   Note: Ensure that the tab on the deflector is pushing in the safety switch (Figure 3). If the tab is not sufficiently in contact with the safety switch, the blades will not engage.

© 2010—The Toro® Company
8111 Lyndale Avenue South
Bloomington, MN 55420

Register at www.Toro.com.

CE

Original Instructions (EN)
Printed in the USA
All Rights Reserved

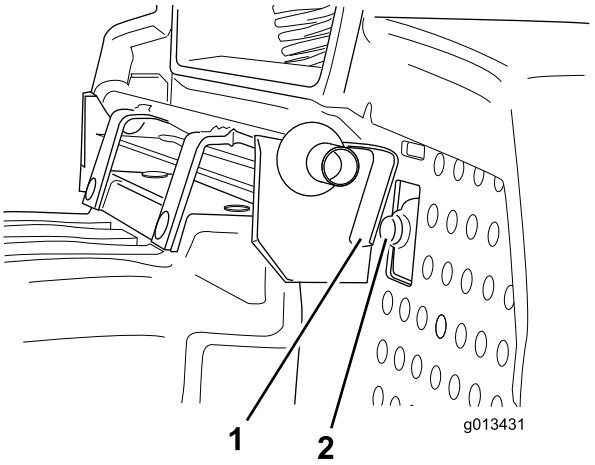

Figure 3

1. Tab
2. Safety switch