Form No. 3365-450 Rev A

TORO®

Count on it.

Operator's Manual

GrandStand® Mower

With a 48in, 52in or 60in TURBO FORCE® Cutting Unit

Model No. 74538—Serial No. 310000001 and Up

Model No. 74539—Serial No. 310000001 and Up

Model No. 74548—Serial No. 310000001 and Up

Model No. 74549—Serial No. 310000001 and Up

Model No. 74550—Serial No. 310000001 and Up

Model No. 74551—Serial No. 310000001 and Up

Model No. 79548—Serial No. 310000001 and Up

Model No. 79549—Serial No. 310000001 and Up

Model No. 79551—Serial No. 310000001 and Up

To register your product or download an *Operator's Manual* or *Parts Catalog* at no charge, go to www.Toro.com.

Original Instructions (EN)

WARNING

CALIFORNIA
Proposition 65 Warning

The engine exhaust from this product contains chemicals known to the State of California to cause cancer, birth defects, or other reproductive harm.

This spark ignition system complies with Canadian ICES-002.

Important: This engine is not equipped with a spark arrester muffler. It is a violation of California Public Resource Code Section 4442 to use or operate the engine on any forest-covered, brush-covered, or grass-covered land. Other states or federal areas may have similar laws.

The enclosed *Engine Owner's Manual* is supplied for information regarding the US Environmental Protection Agency (EPA) and the California Emission Control Regulation of emission systems, maintenance, and warranty. Replacements may be ordered through the engine manufacturer.

Introduction

This rotary-blade, riding lawn mower is intended to be used by residential homeowners or professional, hired operators. It is designed primarily for cutting grass on well-maintained lawns on residential or commercial properties. It is not designed for cutting brush or for agricultural uses.

Read this information carefully to learn how to operate and maintain your product properly and to avoid injury and product damage. You are responsible for operating the product properly and safely.

You may contact Toro directly at www.Toro.com for product and accessory information, help finding a dealer, or to register your product.

Whenever you need service, genuine Toro parts, or additional information, contact an Authorized Service Dealer or Toro Customer Service and have the model and serial numbers of your product ready. Figure 1 identifies the location of the model and serial numbers on the product. Write the numbers in the space provided.

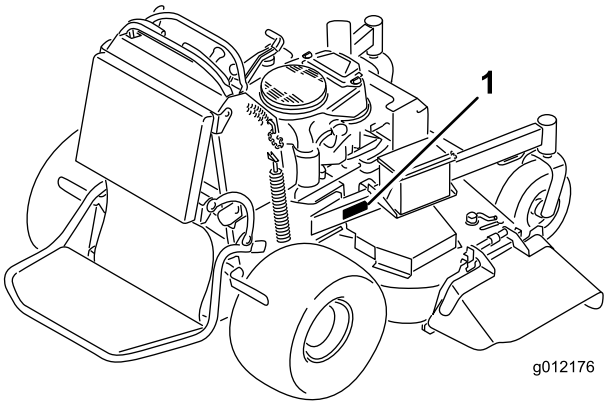

Figure 1

1. Location of the model and serial numbers

Model No. _____

Serial No. _____

This manual identifies potential hazards and has safety messages identified by the following words:

- **Danger** signals an extreme hazard that **will** cause serious injury or death if you do not follow the recommended precautions.
- **Warning** signals a hazard that **may** cause serious injury or death if you do not follow the recommended precautions.
- **Caution** signals a hazard that may cause minor or moderate injury if you do not follow the recommended precautions.

This manual uses two other words to highlight information. **Important** calls attention to special mechanical information and **Note** emphasizes general information worthy of special attention.

Contents

Introduction 2
Safety 4
    Safe Operating Practices 4
    Toro Mower Safety 5
    Slope Indicator 7
    Safety and Instructional Decals 8
Product Overview 12
    Controls 12
    Specifications 13
Operation 14
    Adding Fuel 14
    Checking the Engine Oil Level 15
    Breaking In a New Machine 15

© 2010—The Toro® Company
8111 Lyndale Avenue South
Bloomington, MN 55420

Contact us at www.Toro.com.
Printed in the USA.
All Rights Reserved

Think Safety First 15
Operating the Parking Brake 15
Operating the Mower Blade Control Switch (PTO) 16
Operating the Throttle 16
Operating the Choke 16
Operating the Ignition Switch 17
Using the Speed Control Lever 17
Using the Fuel Shut-Off Valve 17
Starting and Stopping the Engine 18
The Safety Interlock System 19
Operating the Platform 20
Driving Forward or Backward 21
Stopping the Machine 22
Pushing the Machine by Hand 22
Transporting Machines 23
Loading Machines 23
Side Discharging or Mulching the Grass 24
Adjusting the Height-of-Cut 24
Adjusting the Anti-Scalp Rollers (60 inch Mower Decks Only) 24
Adjusting the Flow Baffle 25
Positioning the Flow Baffle 25
Using the Mid-Size Weight 26
Maintenance 27
Recommended Maintenance Schedule(s) 27
Premaintenance Procedures 28
Raising the Mower for Access 28
Release the Cushion for Rear Access 29
Lubrication 30
How to Grease 30
Lubricating the Machine 30
Greasing the Front Caster Pivots 31
Lubricate Caster Wheel Hubs 31
Engine Maintenance 32
Servicing the Air Cleaner 32
Servicing the Engine Oil 34
Servicing the Spark Plug 36
Fuel System Maintenance 38
Draining the Fuel Tank 38
Servicing the Fuel Filter 38
Electrical System Maintenance 39
Servicing the Battery 39
Servicing the Fuses 40
Drive System Maintenance 41
Adjusting the Tracking 41
Checking the Tire Pressure 42
Adjusting the Caster Pivot Bearing 42
Servicing the Caster Wheel and Bearings 42
Adjusting the Electric Clutch 43
Cooling System Maintenance 44
Cleaning the Air Intake Screen 44
Cleaning the Cooling System 44
Brake Maintenance 45
Servicing the Brake 45
Belt Maintenance 47
Replacing the Mower Deck Belt 47
Replacing the Pump Drive Belt 47
Controls System Maintenance 48
Adjusting the Motion Control Handle Positions 48
Hydraulic System Maintenance 50
Servicing the Hydraulic System 50
Mower Deck Maintenance 53
Servicing the Cutting Blades 53
Correcting the Mower Quality of Cut 55
Replacing the Grass Deflector 57
Cleaning 58
Cleaning Under the Mower 58
Waste Disposal 58
Storage 59
Cleaning and Storage 59
Troubleshooting 60
Schematics 62

Safety

Note: The addition of attachments made by other manufacturers that do not meet American National Standards Institute certification will cause noncompliance of this machine.

Improper use or maintenance by the operator or owner can result in injury. To reduce the potential for injury, comply with these safety instructions and always pay attention to the safety alert symbol , which means CAUTION, WARNING, or DANGER-"personal safety instruction." Failure to comply with the instruction may result in personal injury or death.

Safe Operating Practices

The following instructions are from ANSI standard B71.4-2004.

Training

- Read the Operator's Manual and other training material. If the operator(s) or mechanic(s) can not read English it is the owner's responsibility to explain this material to them.
- Become familiar with the safe operation of the equipment, operator controls, and safety signs.
- All operators and mechanics should be trained. The owner is responsible for training the users.
- Never let children or untrained people operate or service the equipment. Local regulations may restrict the age of the operator.
- The owner/user can prevent and is responsible for accidents or injuries occurring to himself or herself, other people or property.

Preparation

- Evaluate the terrain to determine what accessories and attachments are needed to properly and safely perform the job. Only use accessories and attachments approved by the manufacturer.
- Wear appropriate clothing including hard hat, safety glasses and hearing protection. Long hair, loose clothing or jewelry may get tangled in moving parts.
- Inspect the area where the equipment is to be used and remove all objects such as rocks, toys and wire which can be thrown by the machine.
- Use extra care when handling gasoline and other fuels. They are flammable and vapors are explosive.
  - Use only an approved container
  - Never remove gas cap or add fuel with engine running. Allow engine to cool before refueling. Do not smoke.
  - Never refuel or drain the machine indoors.
- Check that operator's presence controls, safety switches and shields are attached and functioning properly. Do not operate unless they are functioning properly.

Operation

- Lightning can cause severe injury or death. If lightning is seen or thunder is heard in the area, do not operate the machine; seek shelter.
- Never run an engine in an enclosed area.
- Only operate in good light, keeping away from holes and hidden hazards.
- Be sure all drives are in neutral and parking brake is engaged before starting engine. Only start engine from the operator's position.
- Be sure of your footing while using this machine, especially when backing up. Walk, don't run. Never operate on wet grass. Reduced footing could cause slipping.
- Slow down and use extra care on hillsides. Be sure to travel side to side on hillsides. Turf conditions can affect the machine's stability. Use caution while operating near drop-offs.
- Slow down and use caution when making turns and when changing directions on slopes.
- Never raise deck with the blades running.
- Never operate with the PTO shield, or other guards not securely in place. Be sure all interlocks are attached, adjusted properly, and functioning properly.
- Never operate with the discharge deflector raised, removed or altered, unless using a grass catcher.
- Do not change the engine governor setting or overspeed the engine.
- Stop on level ground, disengage drives, engage parking brake (if provided), shut off engine before leaving the operator's position for any reason including emptying the catchers or unclogging the chute.
- Stop equipment and inspect blades after striking objects or if an abnormal vibration occurs. Make necessary repairs before resuming operations.
- Keep hands and feet away from the cutting unit.

- Look behind and down before backing up to be sure of a clear path.
- Keep pets and bystanders away.
- Slow down and use caution when making turns and crossing roads and sidewalks. Stop blades if not mowing.
- Be aware of the mower discharge direction and do not point it at anyone.
- Do not operate the mower under the influence of alcohol or drugs.
- Use care when loading or unloading the machine into or from a trailer or truck.
- Use care when approaching blind corners, shrubs, trees, or other objects that may obscure vision.
- Lightning can cause severe injury or death. If lightning is seen or thunder is heard in the area, do not operate the machine; seek shelter.

Maintenance and storage

- Disengage drives, set parking brake, stop engine and remove key or disconnect spark plug wire. Wait for all movement to stop before adjusting, cleaning or repairing.
- Clean grass and debris from cutting unit, drives, mufflers, and engine to help prevent fires. Clean up oil or fuel spillage.
- Let engine cool before storing and do not store near flame.
- Shut off fuel while storing or transporting. Do not store fuel near flames or drain indoors.
- Park machine on level ground. Set parking brake. Never allow untrained personnel to service machine.
- Use jack stands to support components when required.
- Carefully release pressure from components with stored energy.
- Disconnect the battery or remove spark plug wire before making any repairs. Disconnect the negative terminal first and the positive last. Reconnect the positive first and negative last.
- Use care when checking blades. Wrap the blade(s) or wear gloves, and use caution when servicing them. Only replace blades. Never straighten or weld them.
- Keep hands and feet away from moving parts. If possible, do not make adjustments with the engine running.
- Keep all parts in good working condition and all hardware tightened. Replace all worn or damaged decals.

Toro Mower Safety

The following list contains safety information specific to Toro products and other safety information you must know.

This product is capable of amputating hands and feet and throwing objects. Always follow all safety instructions to avoid serious injury or death.

This product is designed for cutting and recycling grass or, when equipped with a grass bagger, for catching cut grass. Any use for purposes other than these could prove dangerous to user and bystanders.

General Operation

- Be sure the area is clear of other people before mowing. Stop the machine if anyone enters the area.
- Do not touch equipment or attachment parts which may be hot from operation. Allow to cool before attempting to maintain, adjust or service.
- Use only Toro approved attachments. Warranty may be voided if used with unapproved attachments.
- Check carefully for overhead clearances (i.e. branches, doorways, electrical wires) before operating under any objects and do not contact them.
- Slow down before making turns and use extra caution.
- Use caution when riding the platform over curbs, rocks, roots, or other obstructions.
- Look behind and down before backing up to be sure of a clear path. Use extra care when operation in reverse.
- Never jerk the controls; use a steady motion.
- When loading or unloading the machine, use one full width ramp that is wide enough to extend beyond the width of the machine.
- Never carry passengers.
- Never carry cans or equipment on the machine.

Slope Operation

All slopes and ramps require extra caution. If you feel uneasy on a slope, do not mow it.

- Remove obstacles such as rocks, tree limbs, etc. from the mowing area.
- Watch for holes, ruts or bumps. Tall grass can hide obstacles.
- Use caution near drop-offs, ditches, or embankments. The machine could suddenly turn over if a wheel

goes over the edge of a cliff or ditch, or if an edge caves in.

- Use extra care with grass catchers or other attachments. These can change the stability of the machine.
- Keep all movement on slopes slow and gradual. Do not make sudden changes in speed or direction.
- Mow slopes side to side.
- Do not mow slopes greater than 20 degrees.

Service

- Never store the machine or fuel container inside where there is an open flame, such as near a water heater or furnace.
- Keep nuts and bolts tight, especially the blade attachment bolts. Keep equipment in good condition.
- Never tamper with safety devices. Check safety systems for proper operation before each use.
- Use only genuine replacement parts to ensure that original standards are maintained.
- Check brake operation frequently. Adjust and service as required.

Slope Indicator

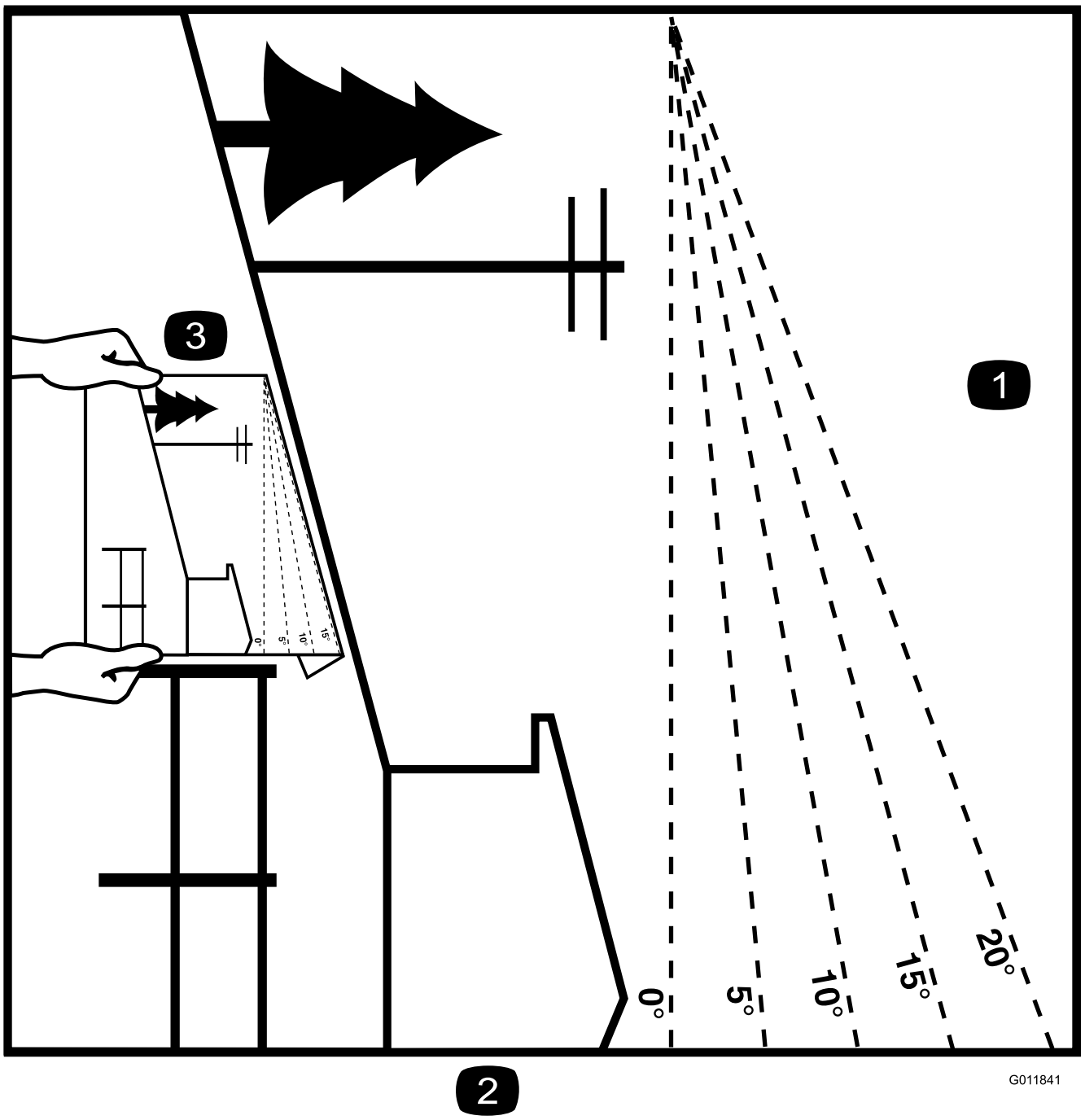

Figure 2

This page may be copied for personal use.

1. The maximum slope you can safely operate the machine on is **20 degrees**. Use the slope chart to determine the degree of slope of hills before operating. **Do not operate this machine on a slope greater than 20 degrees.** Fold along the appropriate line to match the recommended slope.
2. Align this edge with a vertical surface, a tree, building, fence pole, etc.
3. Example of how to compare slope with folded edge.

Safety and Instructional Decals

Safety decals and instructions are easily visible to the operator and are located near any area of potential danger. Replace any decal that is damaged or lost.



1-403005



54-9220



58-6520

1. Grease



68-8340



98-5954



Battery Symbols

Some or all of these symbols are on your battery

1. Explosion hazard
2. No fire, open flame, or smoking.
3. Caustic liquid/chemical burn hazard
4. Wear eye protection
5. Read the *Operator's Manual.*
6. Keep bystanders a safe distance from the battery.
7. Wear eye protection; explosive gases can cause blindness and other injuries
8. Battery acid can cause blindness or severe burns.
9. Flush eyes immediately with water and get medical help fast.
10. Contains lead; do not discard.



106-5517

1. Warning–Do Not touch the hot surface.



Manufacturer's Mark

1. Indicates the blade is identified as a part from the original machine manufacturer.

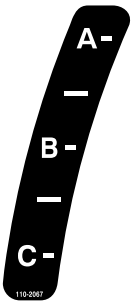

110-2067

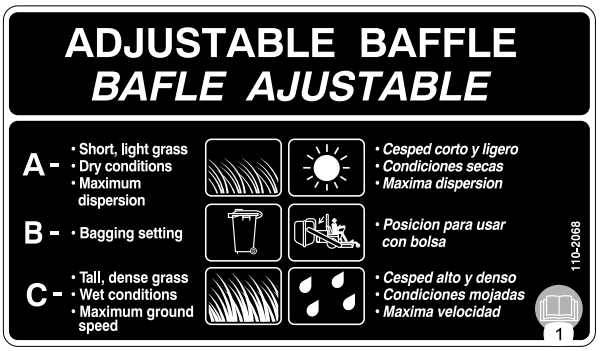

110-2068

1. Read the *Operator's Manual*.

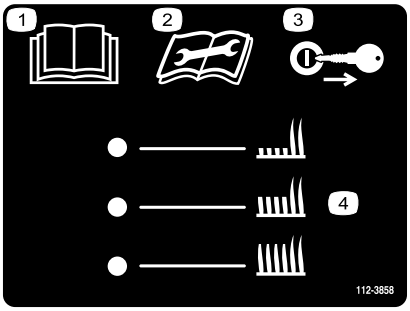

112-3858

1. Read the *Operator's Manual*.
2. Read the instructions before servicing or performing maintenance.
3. Remove the ignition key before adjusting the height of cut.
4. Height of cut settings.

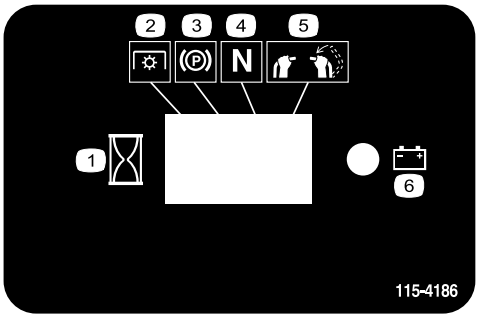

115-4186

1. Interval
2. Power Take-off (PTO)
3. Parking brake
4. Neutral
5. Operator presence switch
6. Battery



115-4212

1. Hydraulic oil level
2. Read the *Operator's Manual*.
3. Warning—do not touch the hot surface.

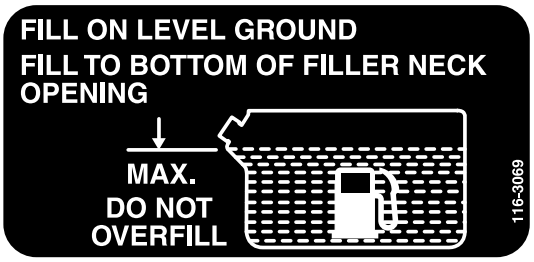

116-3069



116-3076

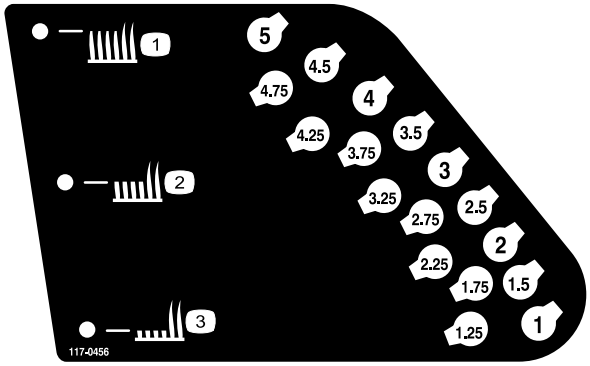

117-0456

1. Height of cut (HOC)—high
2. Height of cut (HOC)—medium
3. Height of cut (HOC)—low



117-0486



117-0485

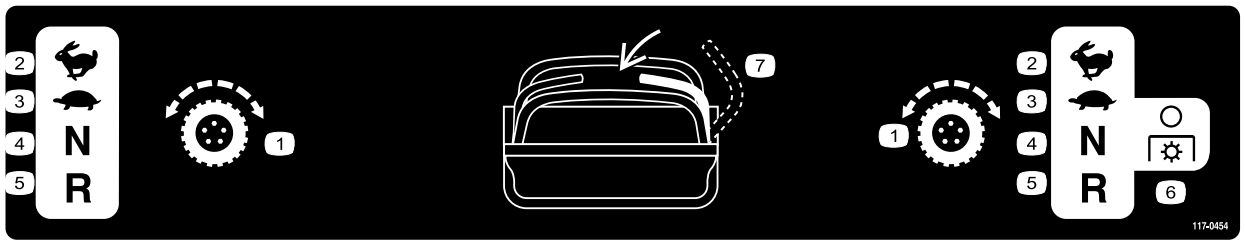

117-0454

1. Traction control
2. Fast
3. Slow
4. Neutral
5. Reverse
6. Power Take-off (PTO)—disengage
7. Operator presence switch

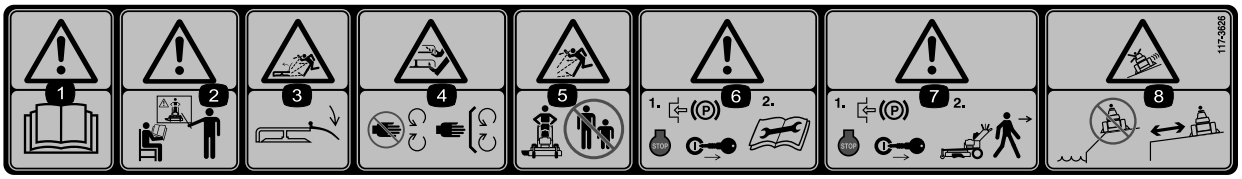

117–3626

1. Warning—read the *Operator's Manual.*
2. Warning—do not operate this machine unless you are trained.
3. Thrown object hazard—keep deflector in place.
4. Cutting, dismemberment hazard of hand or foot—stay away from moving parts and keep all guards and shields in place.
5. Thrown object hazard—keep bystanders a safe distance from the machine.
6. Warning—engage the parking brake, stop the engine and remove the spark plug wire before performing any maintenance on the machine.
7. Warning—engage the parking brake and stop the engine before leaving the machine.
8. Sliding and loss of control hazard—do not operate the machine near drop-offs or water; keep a safe distance from drop-offs.

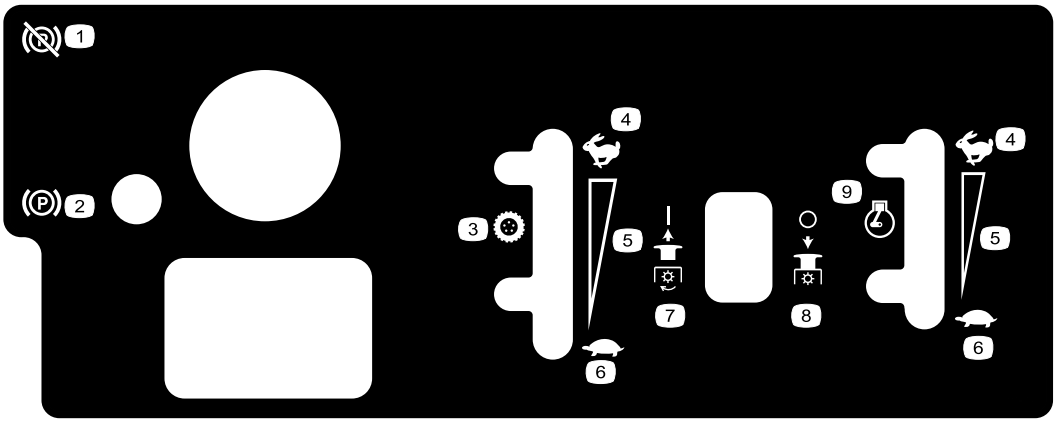

119-7245

1. Parking brake—disengage
2. Parking brake—engage
3. Traction control
4. Fast
5. Continuous variable setting
6. Slow
7. Power Take-off (PTO)—engage
8. Power Take-off (PTO)—disengage
9. Engine speed

Product Overview

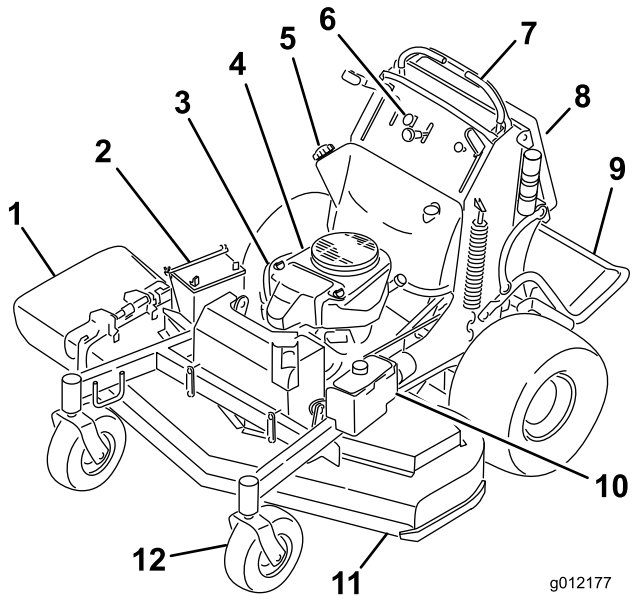

Figure 3

1. Side discharge chute
2. Battery
3. Engine
4. Fuel shut-off valve
5. Fuel tank
6. Controls
7. Control levers
8. Manual tube
9. Platform (down position)
10. Hydraulic tank
11. Mower deck
12. Front caster wheel

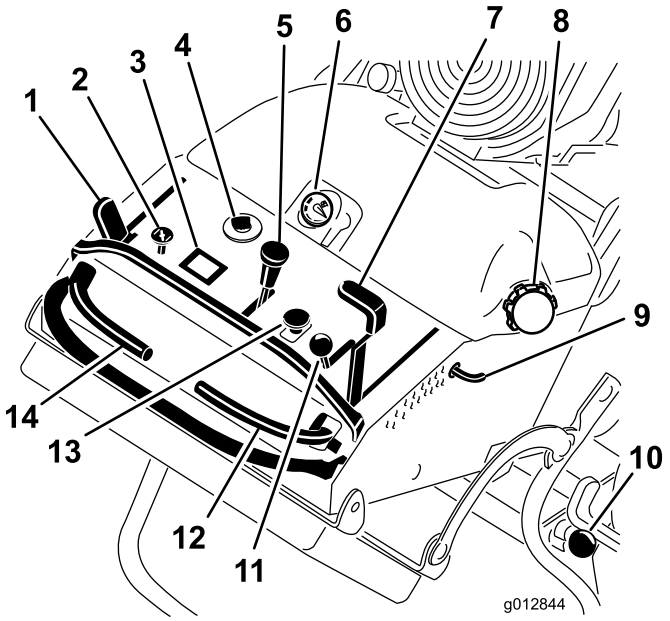

Figure 4

1. Parking brake lever
2. Choke
3. Hour meter
4. Ignition switch
5. Speed control lever
6. Fuel gauge
7. Height-of-cut lever
8. Fuel cap
9. Height-of-cut pin
10. Platform latch
11. Throttle control
12. Right motion control lever
13. Blade control switch (PTO)
14. Left motion control lever

Controls

Become familiar with all the controls (Figure 4) before you start the engine and operate the machine.

Hour Meter

The hour meter records the number of hours the engine has operated. It operates when the engine is running. Use these times for scheduling regular maintenance (Figure 5).

Fuel Gauge

The fuel gauge is located on the top, middle of the tank (Figure 4).

Safety Interlock Indicators

There are symbols on the hour meter and indicate with a black triangle that the interlock component is in the correct position (Figure 5).

Battery Indicator Light

If the ignition key is turned to the **On** position for a few seconds, the battery voltage will be displayed in the area where the hours are normally displayed.

The battery light turns on when the ignition is turned on and when the charge is below the correct operating level (Figure 5).

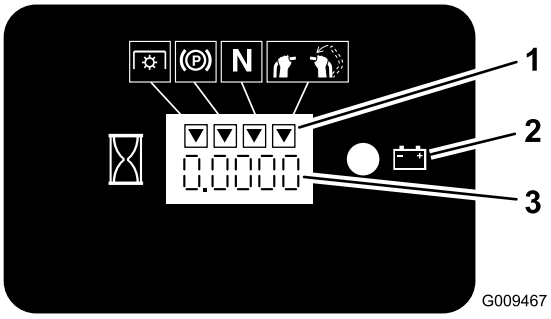

Figure 5

1. Safety interlock symbols
2. Battery light
3. Hour meter

Speed Control Lever

This machine has a variable speed control. This controls how fast or slow the machine will travel.

Throttle Control

The throttle control is variable between **Fast** and **Slow**.

Choke

Use the choke to start a cold engine.

Blade Control Switch (PTO)

The blade control switch (PTO) is used to engage the electric clutch to drive the mower blades with the right side motion control lever in the center, un-locked position. Pull the switch up to engage the blades and release. To disengage the blades, push the blade control switch (PTO) down or move or release the right side motion control lever into the neutral lock position.

Ignition Switch

This switch is used to start the mower engine and has three positions: **Off, Run** and **Start**.

Motion Control Levers

The motion control levers are used to drive the machine forward, reverse, and turn either direction.

Fuel Shut-off Valve

Close the fuel shut-off valve (on the right side of the engine) when transporting or storing the mower.

Attachments/Accessories

A selection of Toro approved attachments and accessories are available for use with the machine to enhance and expand its capabilities. Contact your Authorized Service Dealer or Distributor or go to www.Toro.com for a list of all approved attachments and accessories.

Specifications

Note: Specifications and design are subject to change without notice.

48 inch mowers:

Width with deflector down	63.5 inches (161.3 cm)
Length with platform down	74 inches (188 cm)
Length with platform up	58 inches (147.3 cm)
Height	48 inches (121.9 cm)
Weight with 20hp engine	881 (399.6 kg)
Weight with 24hp engine	888 (402.8 kg)

52 inch mowers:

Width with deflector down	67.5 inches (171.4 cm)
Length with platform down	74 inches (188 cm)
Length with platform up	58 inches (147.3 cm)
Height	48 inches (121.9 cm)
Weight with 20hp engine	883 (400.5 kg)
Weight with 24hp engine	900 (408.2 kg)

60 inch mowers:

Width with deflector down	75.67 inches (192.2 cm)
Length with platform down	74 inches (188 cm)
Length with platform up	58 inches (147.3 cm)
Height	48 inches (121.9 cm)
Weight with 25hp engine	920 (417.3 kg)
Weight with 26hp engine	925 (419.5 kg)

Operation

Note: Determine the left and right sides of the machine from the normal operating position.

Adding Fuel

Use **Unleaded** Regular Gasoline suitable for automotive use (85 pump octane minimum). Leaded regular gasoline may be used if unleaded regular is not available.

Important: Never use methanol, gasoline containing methanol, or gasohol containing more than 10% ethanol because the fuel system could be damaged. Do not mix oil with gasoline.

⚠ DANGER

In certain conditions, gasoline is extremely flammable and highly explosive. A fire or explosion from gasoline can burn you and others and can damage property.

- **Fill the fuel tank outdoors on level ground, in an open area, when the engine is cold. Wipe up any gasoline that spills.**
- **Never fill the fuel tank inside an enclosed trailer.**
- **Do not fill the fuel tank completely full. Fill the fuel tank to the bottom of the filler neck. The empty space in the tank allows gasoline to expand. Overfilling may result in fuel leakage or damage to the engine or emission system (if equipped).**
- **Never smoke when handling gasoline, and stay away from an open flame or where gasoline fumes may be ignited by a spark.**
- **Store gasoline in an approved container and keep it out of the reach of children. Never buy more than a 30-day supply of gasoline.**
- **Do not operate without entire exhaust system in place and in proper working condition.**

⚠ DANGER

In certain conditions during fueling, static electricity can be released causing a spark which can ignite the gasoline vapors. A fire or explosion from gasoline can burn you and others and can damage property.

- **Always place gasoline containers on the ground away from your vehicle before filling.**
- **Do not fill gasoline containers inside a vehicle or on a truck or trailer bed because interior carpets or plastic truck bed liners may insulate the container and slow the loss of any static charge.**
- **When practical, remove gas-powered equipment from the truck or trailer and refuel the equipment with its wheels on the ground.**
- **If this is not possible, then refuel such equipment on a truck or trailer from a portable container, rather than from a gasoline dispenser nozzle.**
- **If a gasoline dispenser nozzle must be used, keep the nozzle in contact with the rim of the fuel tank or container opening at all times until fueling is complete.**

⚠ WARNING

Gasoline is harmful or fatal if swallowed. Long-term exposure to vapors can cause serious injury and illness.

- **Avoid prolonged breathing of vapors.**
- **Keep face away from nozzle and gas tank or conditioner opening.**
- **Keep gas away from eyes and skin.**

Using Stabilizer/Conditioner

Use a fuel stabilizer/conditioner in the machine to provide the following benefits:

- Keeps gasoline fresh during storage of 90 days or less. For longer storage it is recommended that the fuel tank be drained.
- Cleans the engine while it runs
- Eliminates gum-like varnish buildup in the fuel system, which causes hard starting

Important: Do not use fuel additives containing methanol or ethanol.

Add the correct amount of gas stabilizer/conditioner to the gas.

Note: A fuel stabilizer/conditioner is most effective when mixed with fresh gasoline. To minimize the chance of varnish deposits in the fuel system, use fuel stabilizer at all times.

Filling the Fuel Tank

Note: Do not fill the fuel tank completely full. Fill the fuel tank to the bottom of the filler neck. The empty space in the tank allows the gasoline to expand.

1. Park the machine on level ground.
2. Shut the engine off and set the parking brake.
3. Clean around the fuel tank cap.
4. Fill the fuel tank to the bottom of the filler neck. Ensure there is empty space in the tank to allow the gasoline to expand Figure 6.

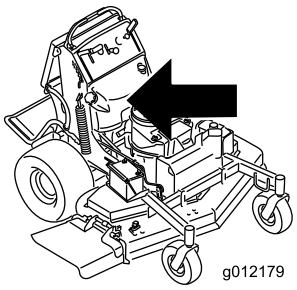

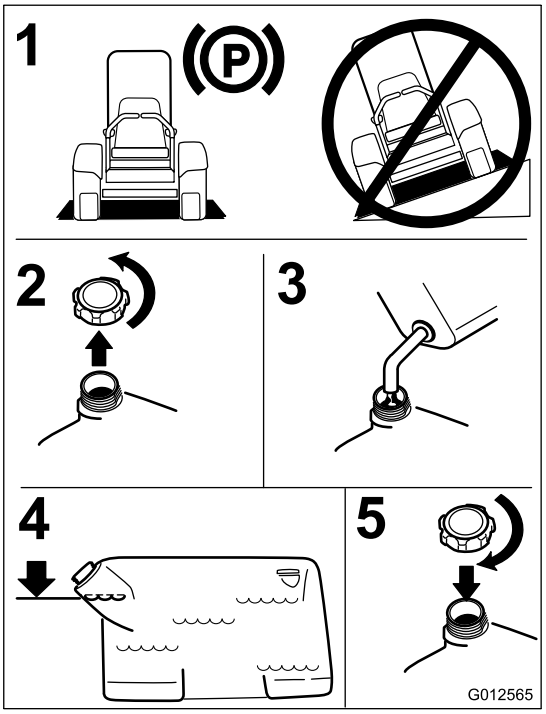

Figure 6

Checking the Engine Oil Level

Before you start the engine and use the machine, check the oil level in the engine crankcase; refer to Checking Oil Level in Engine Maintenance.

Breaking In a New Machine

New engines take time to develop full power. Mower decks and drive systems have higher friction when new, placing additional load on the engine. Allow 40 to 50 hours of break-in time for new machines to develop full power and best performance.

Think Safety First

Carefully read all the safety instructions and decals in the safety section. Knowing this information could help you or any bystanders avoid injury.

The use of protective equipment for eyes, hearing, feet and head is recommended.

⚠ CAUTION

This machine produces sound levels in excess of 85 dBA at the operator's ear and can cause hearing loss through extended periods of exposure.

Wear hearing protection when operating this machine.

Operating the Parking Brake

Always set the parking brake when you stop the machine or leave it unattended. Before each use, check the parking brake for proper operation.

If the parking brake does not hold securely, adjust it. Refer to Servicing the Parking Brake.

⚠ CAUTION

Children or bystanders may be injured if they move or attempt to operate the machine while it is unattended.

Always remove the ignition key and set the parking brake when leaving the machine unattended, even if just for a few minutes.

Setting the Parking Brake

Pull the parking brake lever rearward and over into engaged position (Figure 7).

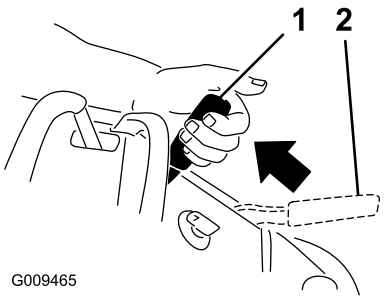

Figure 7

1. Parking brake engaged
2. Parking brake released

Releasing the Parking Brake

Pull the brake lever back and over into the slot and push the parking brake lever forward.

Operating the Mower Blade Control Switch (PTO)

The blade control switch (PTO) is used in conjunction with the right side motion control lever to engage and disengage the mower blades.

Engaging the Mower Blades (PTO)

1. To engage the mower blades, move the right side motion control lever to the center, un-locked position.
2. Pull the blade control switch (PTO) up and release it while holding down the right side motion control lever in the center, un-locked position.

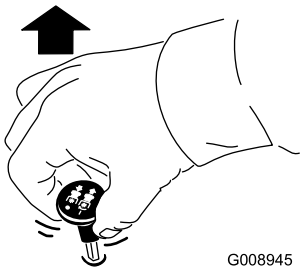

Figure 8

Disengaging the Mower Blades (PTO)

The following are two options for disengaging the mower blades.

- Push the blade control switch (PTO) down to the off position.
- Move the motion control levers to neutral and move the right side motion control lever into the neutral lock position.

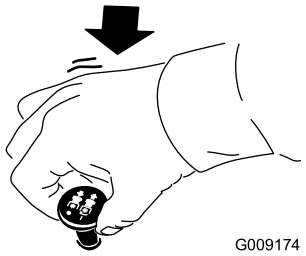

Figure 9

Operating the Throttle

The throttle control can be moved between **Fast** and **Slow** positions (Figure 10).

Always use the fast position when turning on the mower deck with the blade control switch (PTO).

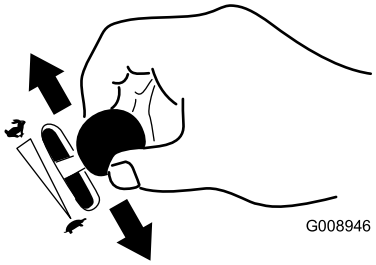

Figure 10

Operating the Choke

Use the choke to start a cold engine.

1. If the engine is cold, use the choke to start the engine.
2. Pull up on the choke knob to engage the choke before using the ignition switch (Figure 11).
3. Push down on the choke to disengage the choke after the engine has started (Figure 11).

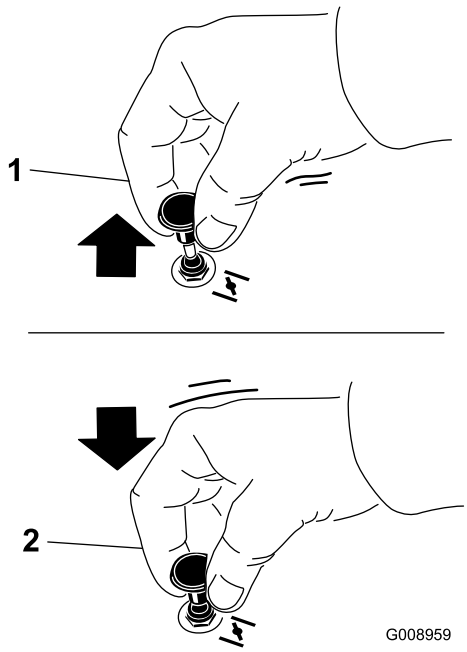

Figure 11

1. On 2. Off

Operating the Ignition Switch

1. Turn the ignition key to the Start position (Figure 12). When the engines starts, release the key.

   Important: Do not engage starter for more than 5 seconds at a time. If the engine fails to start allow a 15 second cool-down period between attempts. Failure to follow these instructions can burn out the starter motor.

   Note: Additional starting cycles may be required when starting the engine for the first time after the fuel system has been without fuel completely.

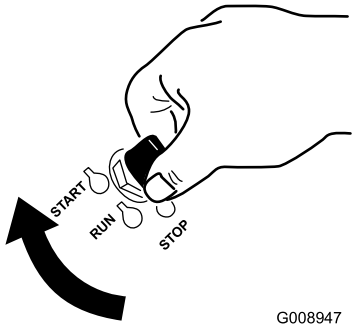

Figure 12

2. Turn the ignition key to stop to stop the engine.

Using the Speed Control Lever

This machine has a speed control lever that sets the maximum ground speed of the machine. This can be adjusted to the operator's desired speed. It is recommended to use the slowest speed for new operator's.

1. Move the speed control lever to set the desired speed.
   - Full forward has quick response and maximum speed.
   - Full rearward has smooth response and slower speed.
2. Move the control levers to drive the machine. The control levers may be pushed forward to the front reference bar while the speed of the machine is controlled by the speed control lever.

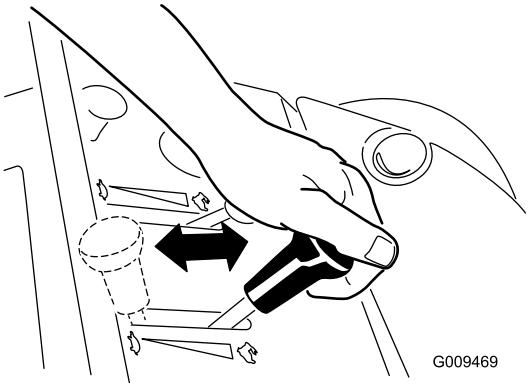

Figure 13

Using the Fuel Shut-Off Valve

Close the fuel shut-off valve for transport, maintenance, and storage (Figure 14).

Ensure the fuel shut-off valve is open when starting the engine.

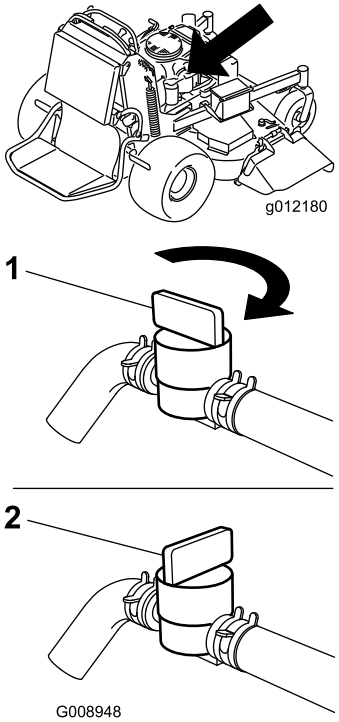

Figure 14

1. On
2. Off

Starting and Stopping the Engine

Starting the Engine

1. Connect the wires to the spark plugs.
2. Open the fuel valve.
3. Move the right motion control lever to neutral locked position.
4. Set the parking brake; refer to Setting the Parking Brake.
5. Move the blade control switch (PTO) to the **Off** position.
6. Move the throttle lever midway between the **Slow** and **Fast** positions.

   Note: A warm or hot engine may not require choking.

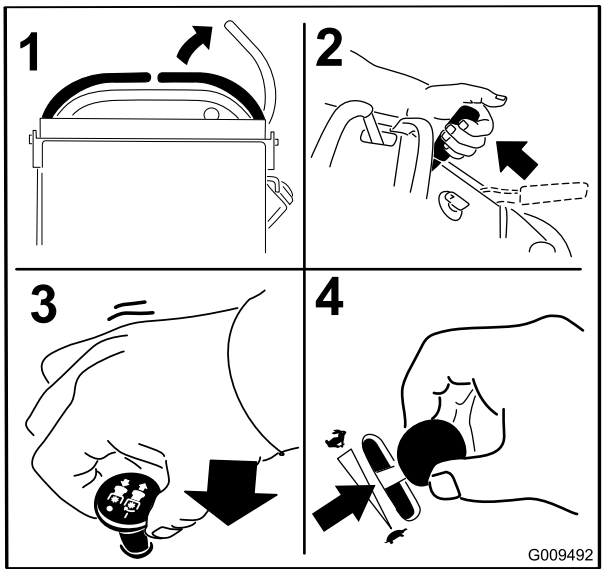

Figure 15

7. Turn the ignition key to the Start position (Figure 12). When the engines starts, release the key.

   Important: Do not engage starter for more than 5 seconds at a time. If the engine fails to start allow a 15 second cool-down period between attempts. Failure to follow these instructions can burn out the starter motor.

   Note: Additional starting cycles may be required when starting the engine for the first time after the fuel system has been without fuel completely.

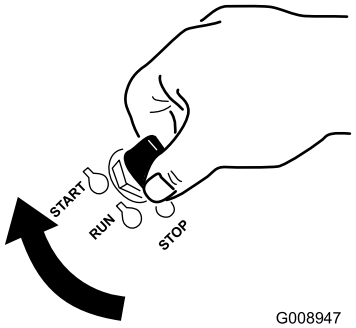

Figure 16

1. Off
2. Run
3. Start

Stopping the Engine

⚠ CAUTION

Children or bystanders may be injured if they move or attempt to operate the tractor while it is unattended.

Always remove the ignition key and set the parking brake when leaving the machine unattended, even if just for a few minutes.

Let the engine idle at slow throttle (turtle) for 60 seconds before turning the ignition switch off.

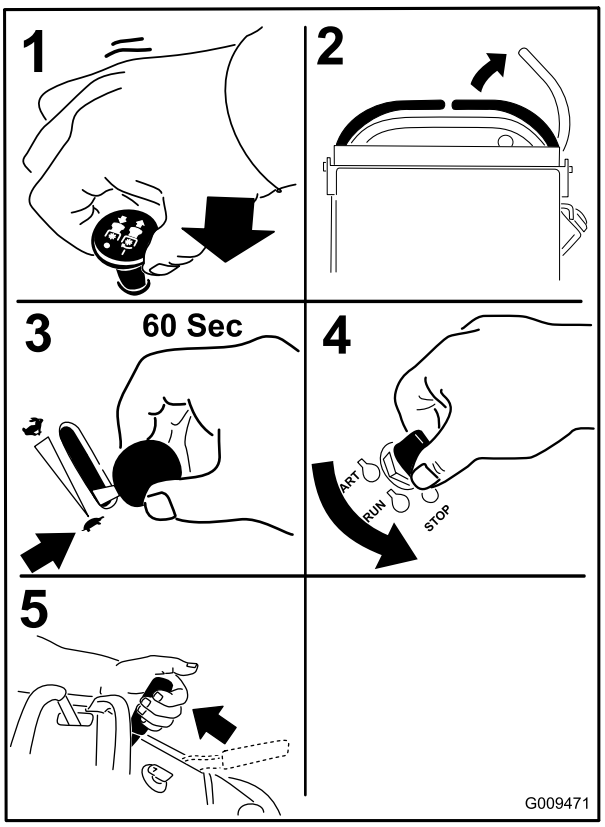

Figure 17

Important: Make sure fuel shut off valve is closed before transporting or storing the machine, as fuel leakage may occur. Before storing the machine, pull wire off spark plug(s) to prevent possibility of accidental starting.

The Safety Interlock System

⚠ CAUTION

If safety interlock switches are disconnected or damaged the machine could operate unexpectedly causing personal injury.

- **Do not tamper with the interlock switches.**
- **Check the operation of the interlock switches daily and replace any damaged switches before operating the machine.**

Understanding the Safety Interlock System

The safety interlock system is designed to prevent the mower blades from rotating unless:

- The right side motion control lever is moved to the center, un-locked position.
- The blade control switch (PTO) is pulled **on**.

The safety interlock system is designed to stop the mower blades if you move or release the right side motion control lever into the neutral lock position.

The hour meter has symbols to notify the user when the interlock component is in the correct position. When the component is in the correct position, a triangle will light up in the corresponding square.

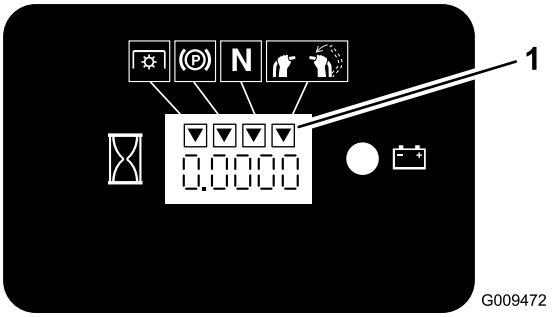

Figure 18

1. Triangles light up when the interlock components are in the correct position

Testing the Safety Interlock System

Service Interval: Before each use or daily

Test the safety interlock system before you use the machine each time.

Note: If the safety system does not operate as described below, have an Authorized Service Dealer repair the safety system immediately.

1. Start the engine; refer to Starting and Stopping the Engine in Operation (page 14).
2. Set the parking brake.

3. Move the right side motion control lever to the center, un-locked position. **The blades should not rotate.**
4. Move the motion control levers forward. **The engine should kill.**
5. Start the engine and release the parking brake.
6. Move the right side motion control lever to the center, un-locked position.
7. Continue holding the right side motion control lever in the center, un-locked position and pull up on the blade control switch (PTO) and release. The clutch should engage and the mower blades begin rotating.
8. Move or release the right side motion control lever into the neutral lock position. **The blades should stop rotating and the engine continues to run.**
9. Push the blade control switch down and move the right side motion control lever to the center, un-locked position.
10. Continue holding the right side motion control lever in the center, un-locked position and pull up on the blade control switch (PTO) and release. The clutch should engage and the mower blades begin rotating.
11. Push the blade control switch (PTO) down to the off position. **The blades should stop rotating.**
12. With the engine running, pull up the blade control switch (PTO) and release without holding right side motion control lever to the center, un-locked position. **The blades should not rotate.**

⚠ WARNING

The operator platform is heavy and may cause injury when lowering and raising the operator platform. The platform may suddenly drop if not supported when the latch pin is pulled out.

- **Do not put hands or fingers in the platform pivot area when lowering or raising the operator platform.**
- **Make sure the platform is supported when the latch pin is pulled out.**
- **Make sure the latch secures the platform when folding it in the up position. Push it tight against the cushion for the latch pin to lock into place.**
- **Keep bystanders away when raising or lowering the platform.**

Operating the Platform

The machine can be used with the platform in the up or down position. It is the operator's preference on which position to use.

Operating the Machine with the Platform Up

Operating the machine with the platform up is recommended when:

- Mowing near drop-off's
- Mowing small areas where the machine is too long
- Areas with low over hanging branches or obstacles
- Loading the machine for transport
- Driving up slopes

To raise the platform, pull the back of the platform up so the latch pin and knob lock it into place. Push it tight against the cushion for the latch pin to lock into place.

Operating the Machine with the Platform Down

Operating the machine with the platform down is recommended when:

- Mowing most areas
- Driving across slopes
- Driving down slopes

To lower the platform, push the platform forward against the cushion to release pressure on the latch pin and then pull the knob out and lower the platform.

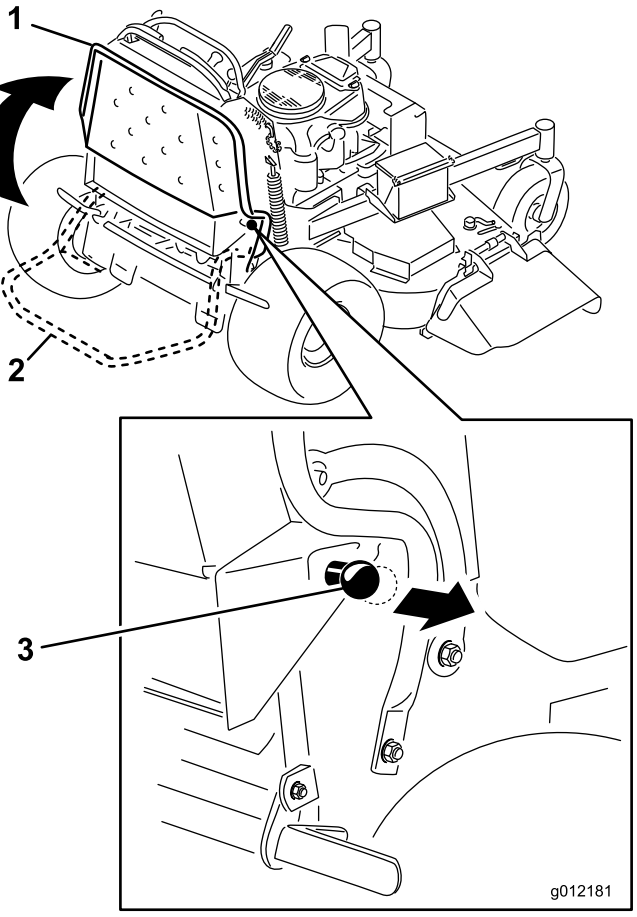

Figure 19

1. Platform up
2. Platform down
3. Pull the knob out to release the platform

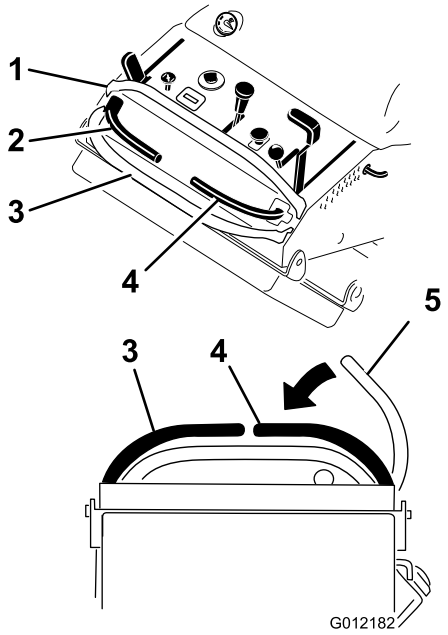

Figure 20

1. Front reference bar
2. Left control lever
3. Rear reference bar
4. Right control lever
5. Right control lever in the neutral lock position

Driving Forward or Backward

The throttle control regulates the engine speed as measured in rpm (revolutions per minute). Place the throttle control in the fast position for best performance. Always operate in the full throttle position when mowing.

⚠ CAUTION

Machine can spin very rapidly. Operator may lose control of machine and cause personal injury or damage to machine.

Slow the machine down before making sharp turns.

Driving Forward

1. Release the parking brake; refer to Releasing the Parking Brake in Operation.
2. Move the right side motion control lever to the center, un-locked position.
3. To go forward, move the speed control lever to the desired speed.
4. Slowly push the motion control levers forward (Figure 21).

   Note: The engine will kill if a motion control lever is moved with the parking brake engaged.

   The farther you move the motion control levers in either direction, the faster the machine will move in that direction.

   To stop, pull the motion control levers back to the neutral position.

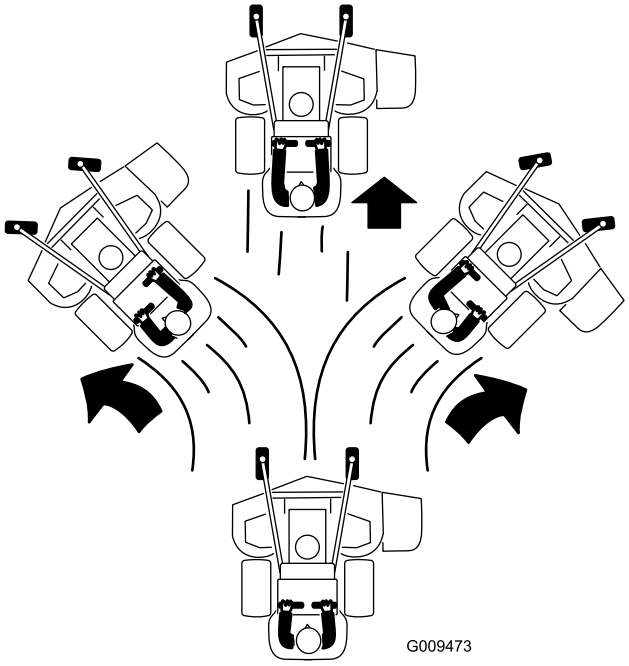

Figure 21

Driving Backward

1. Move the right side motion control lever to the center, un-locked position.
2. Slowly pull the motion control levers rearward (Figure 22).

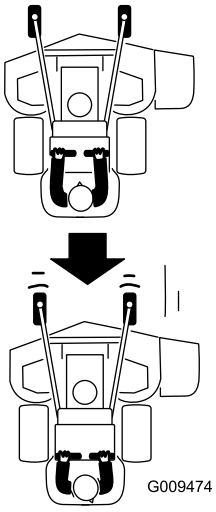

Figure 22

Stopping the Machine

To stop the machine, move the motion control levers to neutral, move the right side motion control lever into the neutral lock position, disengage the power take off (PTO), and turn the ignition key to off.

Set the parking brake when you leave the machine; refer to Setting the Parking Brake in Operation. Remember to remove the key from the ignition switch.

⚠ CAUTION

Children or bystanders may be injured if they move or attempt to operate the tractor while it is unattended.

Always remove the ignition key and set the parking brake when leaving the machine unattended, even if just for a few minutes.

Pushing the Machine by Hand

The by-pass valves allow the machine to be pushed by hand without the engine running.

Important: Always push the machine by hand. Never tow the machine because hydraulic damage may occur.

To Push the Machine

1. Disengage the PTO, move the motion control levers to the neutral locked position and set the parking brake.
2. Open the by-pass valve on both pumps by turning them counter clockwise 1 to 2 turns. This allows hydraulic fluid to by-pass the pumps and the wheels to turn (Figure 23).

   Note: Rotate the by-pass valves a maximum of 2 turns so the valve does not come out of the body causing fluid to run out.

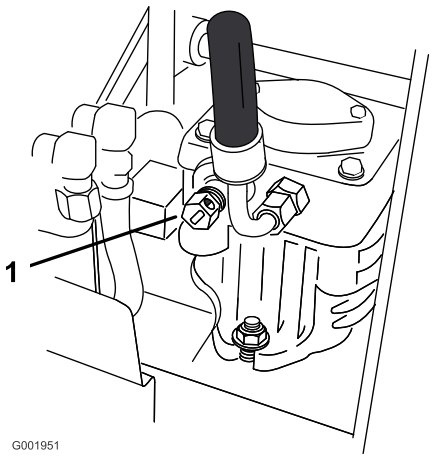

Figure 23

1. Pump by-pass valve

3. Release the parking brake.

4. Push the machine to the desired location.
5. Set the parking brake.
6. Close the by-pass valves, but do not overtighten them.

   Important: Do not start or operate the machine with the by-pass valves open. Damage to system may occur.

Transporting Machines

Use a heavy-duty trailer or truck to transport the machine. Ensure that the trailer or truck has all necessary brakes, lighting, and marking as required by law. Please carefully read all the safety instructions. Knowing this information could help you, your family, pets or bystanders avoid injury.

To transport the machine:

1. Raise the platform of the machine before driving up onto the trailer or truck.
2. If using a trailer, connect it to the towing vehicle and connect the safety chains.
3. If applicable, connect the trailer brakes.
4. Load the machine onto the trailer or truck.
5. Stop the engine, remove the key, set the brake, and close the fuel valve.
6. Use the metal tie down loops on the machine to securely fasten the machine to the trailer or truck with straps, chains, cable, or ropes (Figure 24).

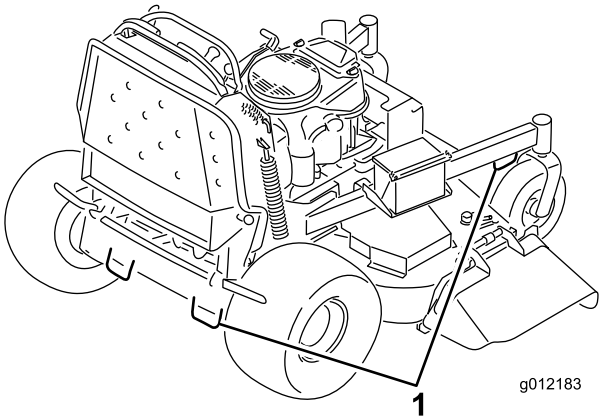

Figure 24

1. Traction unit tie down loop

Loading Machines

Use extreme caution when loading units on trailers or trucks. One full width ramp that is wide enough to extend beyond the rear tires is recommended instead of individual ramps for each side of the unit (Figure 25). The platform when down and locked into position, extends back between the rear wheels and serves as a stop for tipping backward. Having a full width ramp provides a surface for the platform to contact if the unit starts to tip backward. With the platform up, a full width ramp provides a surface to walk on behind the unit. The operator should determine if it is best to have the platform up or down when loading, depending on conditions. If it is not possible to use one full width ramp, use enough individual ramps to simulate a full width continuous ramp.

The ramp should be long enough so that the angles do not exceed 20 degrees (Figure 25). A steeper angle may cause mower components to get caught as the unit moves from ramp to trailer or truck. Steeper angles may also cause the unit to tip backward. If loading on or near a slope, position the trailer or truck so it is on the down side of the slope and the ramp extends up the slope. This will minimize the ramp angle. The trailer or truck should be as level as possible.

Important: Do Not attempt to turn the unit while on the ramp; you may lose control and drive off the side.

Avoid sudden acceleration when driving up a ramp and sudden deceleration when backing down a ramp. Both maneuvers can cause the unit to tip backward.

⚠ WARNING

Loading a unit onto a trailer or truck increases the possibility of backward tip-over and could cause serious injury or death.

- **Use extreme caution when operating a unit on a ramp.**
- **Use only a single, full width ramp; Do Not use individual ramps for each side of the unit.**
- **If individual ramps must be used, use enough ramps to create an unbroken ramp surface wider than the unit.**
- **Do not exceed a 20 degree angle between ramp and ground or between ramp and trailer or truck.**
- **Avoid sudden acceleration while driving unit up a ramp to avoid tipping backward.**
- **Avoid sudden deceleration while backing unit down a ramp to avoid tipping backward.**

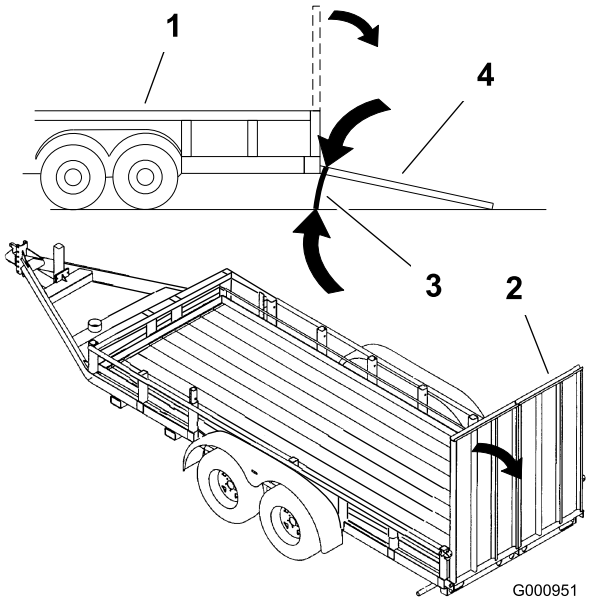

Figure 25

1. Trailer
2. Full width ramp
3. Not greater than 20 degrees
4. Full width ramp—side view

Side Discharging or Mulching the Grass

This mower has a hinged grass deflector that disperses clippings to the side and down toward the turf.

⚠ DANGER

Without the grass deflector, discharge cover, or complete grass catcher assembly mounted in place, you and others are exposed to blade contact and thrown debris. Contact with rotating mower blade(s) and thrown debris will cause injury or death.

- **Never remove the grass deflector from the mower because the grass deflector routes material down toward the turf. If the grass deflector is ever damaged, replace it immediately.**
- **Never put your hands or feet under the mower.**
- **Never try to clear discharge area or mower blades unless you release the bail and the power take off (PTO) is off. Rotate the ignition key to Off. Also remove the key and pull the wire(s) off the spark plug(s).**

Adjusting the Height-of-Cut

The height-of-cut can be adjusted from 1 to 5 inches (25 to 127 mm) in 1/4 inch (6 mm) increments.

1. Move the height-of-cut lever to the transport position (all the way up).
2. Select a hole in the height-of-cut bracket corresponding to the height-of-cut desired and, insert the pin (Figure 26).
3. Lower the height-of-cut lever to the pin (Figure 26).

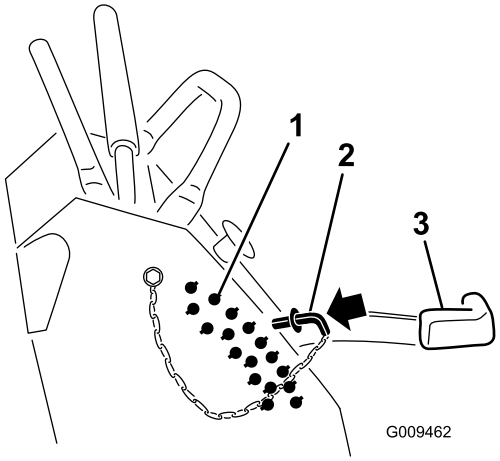

Figure 26

1. Height-of-cut holes
2. Height-of-cut pin
3. Height-of-cut lever

Adjusting the Anti-Scalp Rollers (60 inch Mower Decks Only)

Whenever you change the height-of-cut, it is recommended to adjust the height of the anti-scalp rollers.

1. Disengage the blade control switch (PTO), move the motion control levers to the neutral locked position and set the parking brake.
2. Stop the engine, remove the key, and wait for all moving parts to stop before leaving the operating position.
3. Remove the nut and bolt position the anti-scalp rollers and install the nut and bolt. Ensure the spacers and bushings are installed as shown.

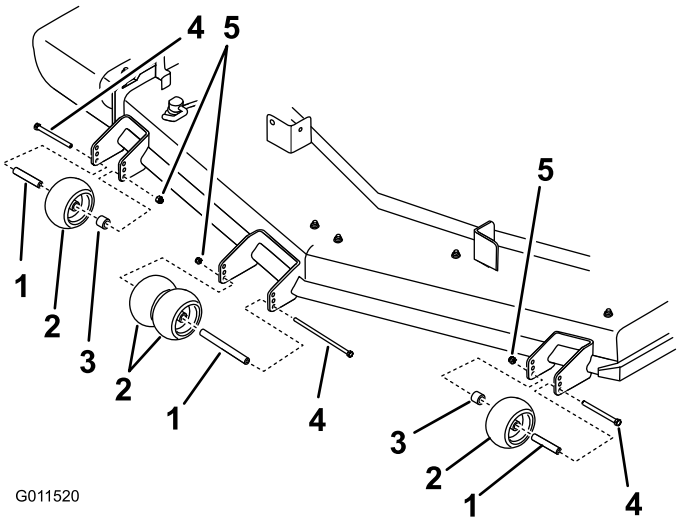

Figure 27

1. Bushing
2. Anti-scalp roller
3. Spacer
4. Bolt
5. Nut

Adjusting the Flow Baffle

The mower discharge flow can be adjusted for different types of mowing conditions. Position the cam lock and baffle to give the best quality of cut.

1. Disengage the PTO, move the motion control levers to the neutral locked position and set the parking brake.
2. Stop the engine, remove the key, and wait for all moving parts to stop before leaving the operating position.
3. To adjust the cam lock, swing the lever up to loosen the cam lock (Figure 28).
4. Adjust the baffle and cam lock in the slot to the desired discharge flow.
5. Swing the lever back over to tighten the baffle and cam lock (Figure 28).
6. If the cam does not lock the baffle into place or it is too tight, loosen the lever and then rotate the cam lock. Adjust the cam lock until the desired locking pressure is achieved.

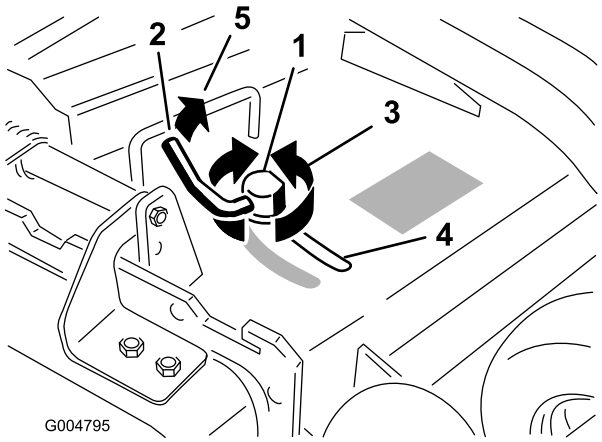

Figure 28

1. Cam lock
2. Lever
3. Rotate cam to increase or decrease locking pressure
4. Slot

Positioning the Flow Baffle

The following figures are only recommendations for use. Adjustments will vary by grass type, moisture content, and height of grass.

Note: If the engine power draws down and the mower ground speed is the same, open up the baffle.

Position A

This is the full rear position (see Figure 29). The suggested use for this position is a follows.

- Use for short, light grass mowing conditions.
- Use in dry conditions.
- For smaller grass clippings.
- Propels grass clippings farther away from the mower.

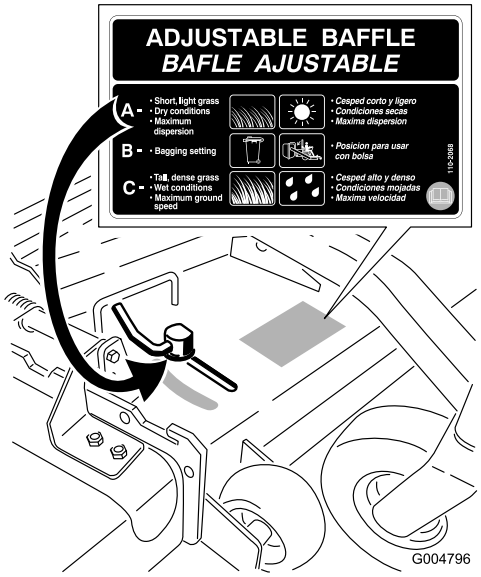

Figure 29

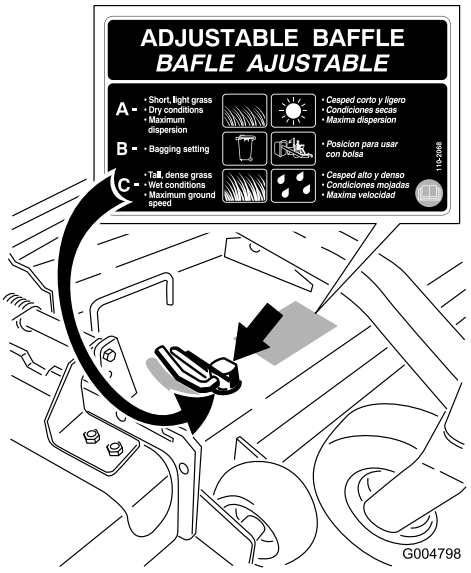

Figure 31

Position B

Use this position when bagging (Figure 30).

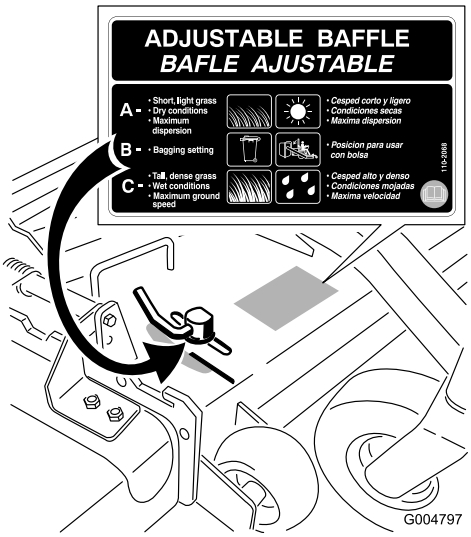

Figure 30

Position C

This is the full open position. The suggested use for this position is as follows (Figure 31).

- Use in tall, dense grass mowing conditions.
- Use in wet conditions.
- Lowers the engine power consumption.
- Allows increased ground speed in heavy conditions.
- This position is similar to the benefits of the Toro SFS mower.

Using the Mid-Size Weight

- Weights are installed to improve handling, balance and improve performance. Weights can be added or removed to create optimized performance under different mowing conditions and for operator preference.
- It is recommended that weights be added or removed one at a time until the desired handing and balance is achieved.

Note: Contact an Authorized Service Dealer to order a Weight Kit.

⚠ WARNING

Excessive weight changes can effect handling and operation of the machine. This could cause serious injury to you or bystanders.

Make weight changes is small increments only.

Evaluate the mower after each weight change to ensure the machine can be operated safely.

Maintenance

Note: Determine the left and right sides of the machine from the normal operating position.

Recommended Maintenance Schedule(s)

Maintenance Service Interval	Maintenance Procedure
After the first 8 hours	• Change the engine oil. • Check the hydraulic fluid level. • Change the hydraulic filter.
Before each use or daily	• Check the safety interlock system. • Check the engine oil level. • Clean the air intake screen. • Check the brakes. • Inspect the blades. • Clean the mower deck.
Every 25 hours	• Clean foam air cleaner element.
Every 50 hours	• Grease the lift linkage (more often in dirty or dusty conditions). • Lubricate the speed control linkage rollers (more often in dirty or dusty conditions). • Check the paper air cleaner element. • Check the tire pressure. • Check the hydraulic fluid level.
Every 100 hours	• Change the engine oil. (more often in dirty or dusty conditions) • Check, clean and regap the spark plug. • Check the battery. • Check and clean engine cooling fins and shrouds. • Check the mower deck belt. • Check the pump drive belt. • Check the hydraulic hoses.
Every 200 hours	• Grease the mower deck spindles (more often in dirty or dusty conditions). • Replace the paper air cleaner element. • Change the engine oil filter.
Every 250 hours	• Change the hydraulic filter and hydraulic oil when using Mobil® 1 oil.
Every 500 hours	• Adjust the caster pivot bearing. • Check the electric clutch. • Change the hydraulic filter and hydraulic oil when using Toro® HYPR-OIL™ 500 hydraulic oil. • Change the hydraulic filter.
Every 800 hours	• Grease the front wheel bearings (more often in dirty or dusty conditions). • Grease the front caster pivots (more often in dirty or dusty conditions). • Replace the fuel filter.
Before storage	• Paint chipped surfaces. • Perform all maintenance procedures listed above before storage.
Yearly	• Grease the front caster pivots (more often in dirty or dusty conditions). • Lubricate the caster wheel hubs

Important: **Refer to your *Engine Operator's Manual* for additional maintenance procedures.**

⚠ CAUTION

If you leave the key in the ignition switch, someone could accidently start the engine and seriously injure you or other bystanders.

Remove the key from the ignition and disconnect the spark plug wires from the spark plugs before you do any maintenance. Set the wires aside so that they do not accidentally contact the spark plugs.

Premaintenance Procedures

Raising the Mower for Access

The front of the mower can be raised and supported on its back for access under the machine for maintenance.

1. Raise the platform. Refer to Operating the Platform in Operation.
2. Remove the battery.

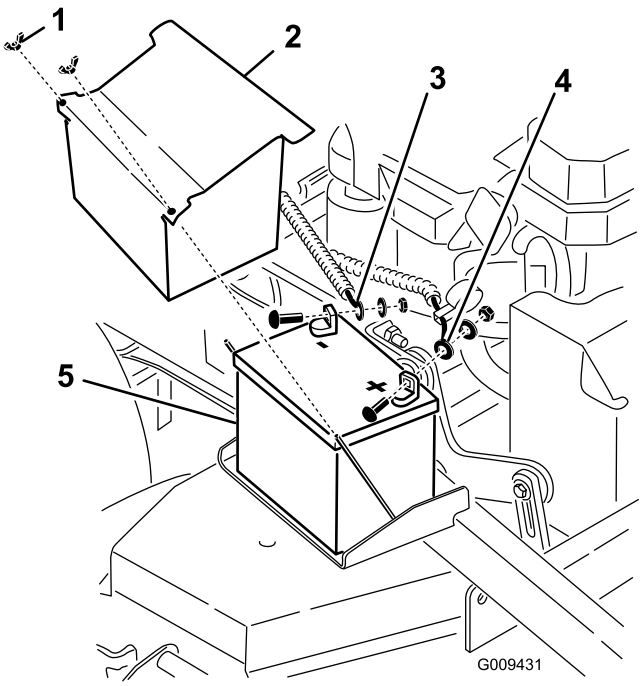

Figure 32

1. Wing nut
2. Battery cover
3. Negative battery cable
4. Positive battery cable
5. Battery

3. Drain the fuel from the fuel tank. Refer to Draining the Fuel Tank in Maintenance.
4. Remove the cap of the hydraulic tank and place a piece of plastic over the opening and install the hydraulic cap. This will seal the hydraulic tank and prevent it from leaking out.

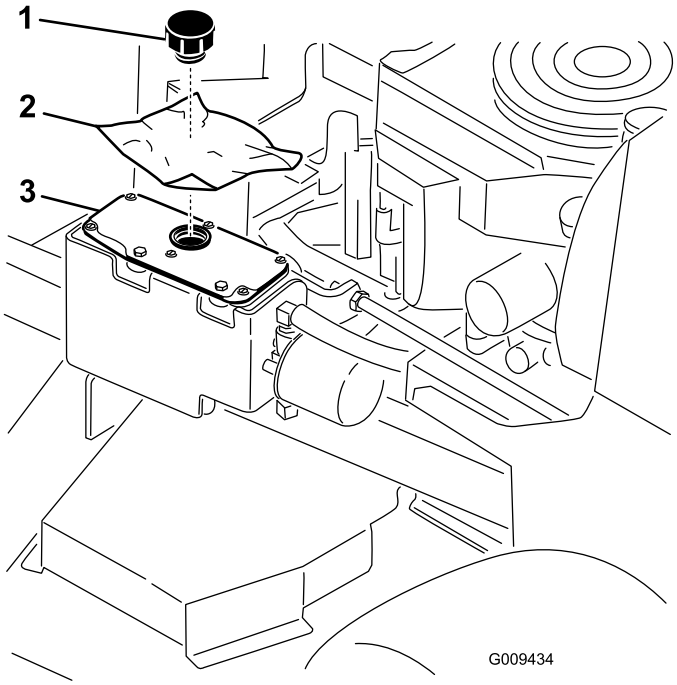

Figure 33

1. Cap
2. Piece of plastic
3. Hydraulic tank

5. With two people, raise the front of the mower so it rests on the drive tires and the platform in the up position.
6. Perform any maintenance on the machine.
7. With two people, lower the front of the mower to the ground.
8. Remove the plastic under the hydraulic tank cap.
9. Install the battery for the machine.

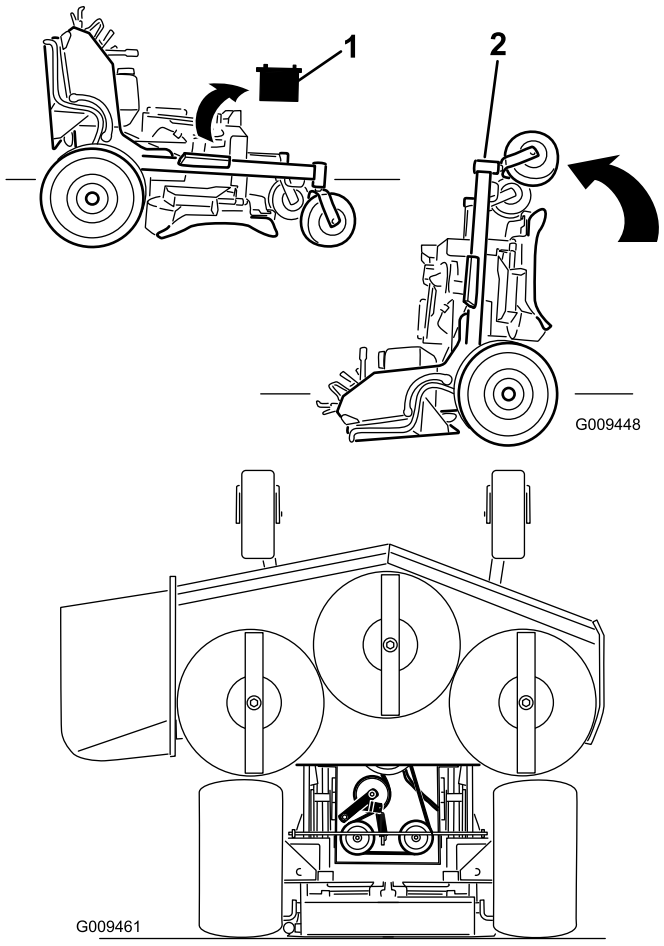

Figure 34

1. Remove battery
2. With two people, lift the front end of the mower (ensure the platform is up)

Release the Cushion for Rear Access

The cushion can be released for rear access to the machine for maintenance or adjustment.

1. Lower the platform.
2. Remove the hairpin cotter pins on each side of the cushion.
3. Slide the large washers with plastic bushings to the inside.
4. Remove the cushion and lower it to the platform.
5. Perform any maintenance or adjustment on the machine.
6. Raise the cushion and slide it onto the pins on both sides of the machine (Figure 35).
7. Slide the large washers plastic bushings into the cushion bracket and secure them with a hairpin cotter pin (Figure 35).

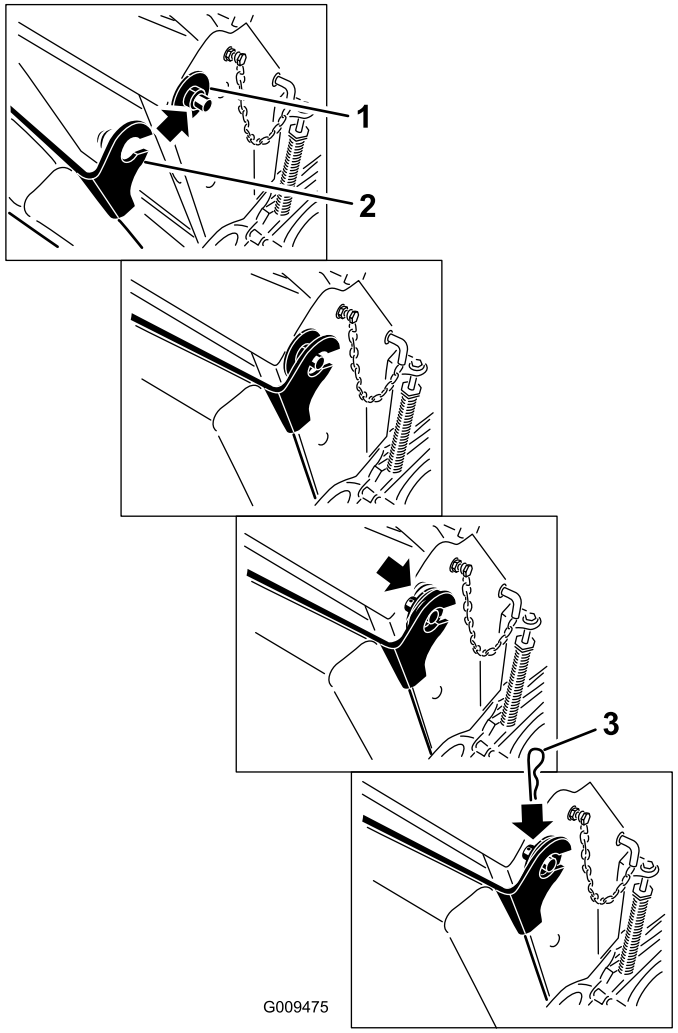

Figure 35

1. Plastic bushing with large washer
2. Cushion bracket with key hole
3. Hairpin cotter pin

Lubrication

Grease with No. 2 general purpose lithium base or molybdenum base grease.

Lubricate the traction rollers with a dry lubricant (PTFE).

How to Grease

1. Disengage the PTO and set the parking brake.
2. Stop the engine, remove the key, and wait for all moving parts to stop before leaving the operating position.
3. Clean the grease fittings with a rag. Make sure to scrape any paint off the front of the fitting(s).
4. Connect a grease gun to the fitting. Pump grease into the fittings until grease begins to ooze out of the bearings.
5. Wipe up any excess grease.

Lubricating the Machine

Service Interval: Every 50 hours—Grease the lift linkage (more often in dirty or dusty conditions).

Every 50 hours—Lubricate the speed control linkage rollers (more often in dirty or dusty conditions).

Every 200 hours—Grease the mower deck spindles (more often in dirty or dusty conditions).

Every 800 hours/Yearly (whichever comes first)—Grease the front wheel bearings (more often in dirty or dusty conditions).

Every 800 hours/Yearly (whichever comes first)—Grease the front caster pivots (more often in dirty or dusty conditions).

Use the following graphics for locating the grease points.

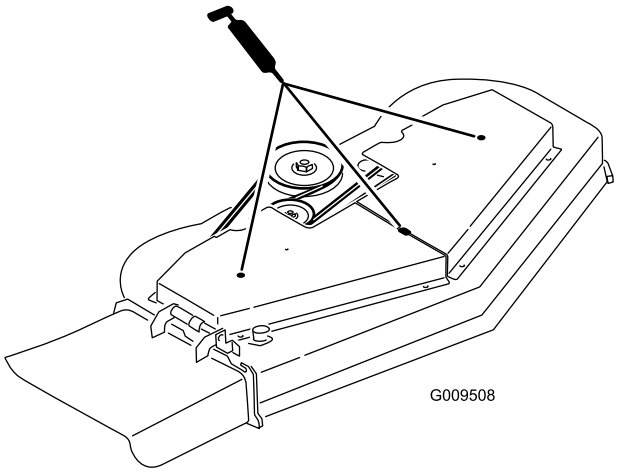

Figure 36

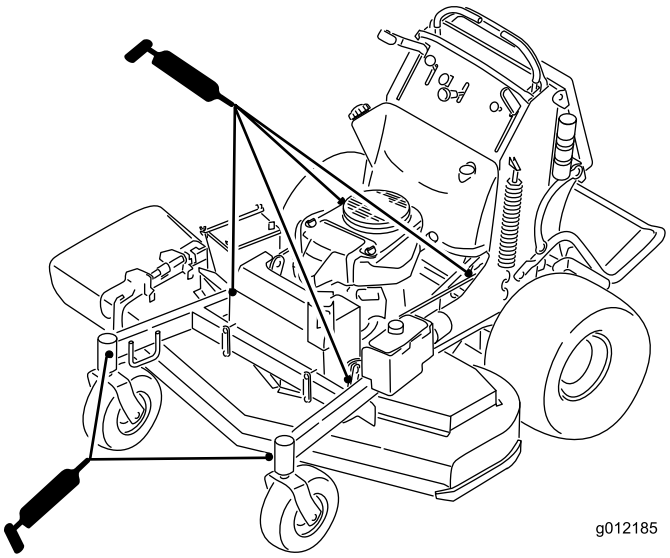

Figure 37

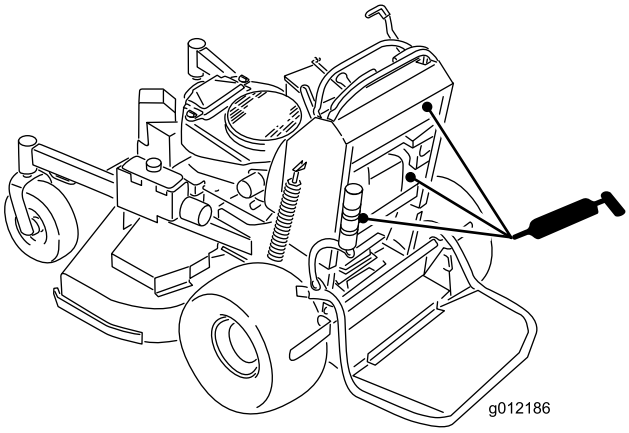

Figure 38

Lubricate the speed control linkage rollers with a dry PTFE (Polytetrafluoroethylene) lubricant.

Important: Use only a dry PTFE (Polytetrafluoroethylene) lubricant. Do not use a wet oil film, which will attract dust and dirt.

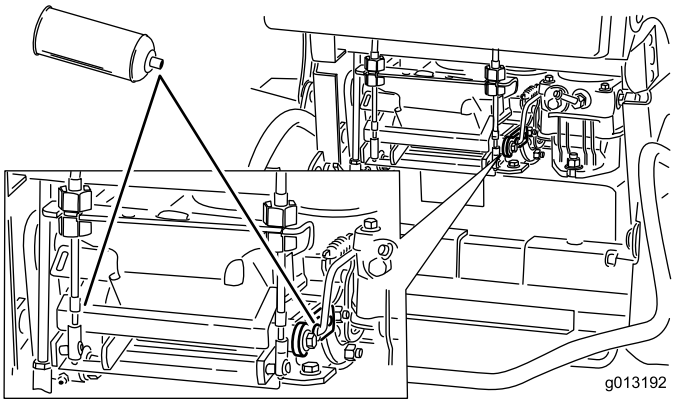

Figure 39

Greasing the Front Caster Pivots

Service Interval: Yearly

Lubricate the front caster pivots once a year.

1. Remove the dust cap and adjust the caster pivots. Keep the dust cap off until greasing is done. Refer to Adjusting the Caster Pivot Bearing in Maintenance Section.
2. Remove the hex plug. Thread a grease zerk into the hole.
3. Pump grease into the zerk until it oozes out around the top bearing.
4. Remove the grease zerk in the hole. Install the hex plug and cap.

Lubricate Caster Wheel Hubs

Service Interval: Yearly

1. Stop the engine, wait for all moving parts to stop, and remove the key. Engage the parking brake.

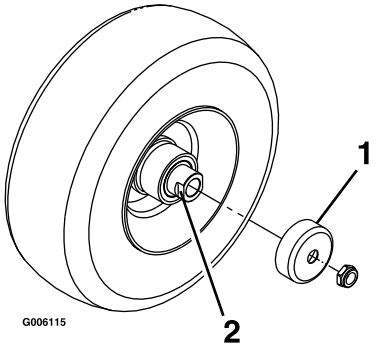

Figure 40

1. Seal guard
2. Spacer nut with wrench flats

2. Remove the caster wheel from the caster forks.
3. Remove the seal guards from the wheel hub.
4. Remove one of the spacer nuts from the axle assembly in the caster wheel. Note that thread locking adhesive has been applied to lock the spacer nuts to the axle. Remove the axle (with the other spacer nut still assembled to it) from the wheel assembly.
5. Pry out seals, and inspect bearings for wear or damage and replace if necessary.
6. Pack the bearings with a general-purpose grease.
7. Insert one bearing, one new seal into the wheel.

   Note: The seals must be replaced.
8. If the axle assembly has had both spacer nuts removed (or broken loose), apply a thread locking adhesive to one spacer nut and thread onto the axle with the wrench flats facing outward. Do Not thread spacer nut all of the way onto the end of the axle. Leave approximately 1/8 inch (3 mm) from the outer surface of the spacer nut to the end of the axle inside the nut.
9. Insert the assembled nut and axle into the wheel on the side of the wheel with the new seal and bearing.
10. With the open end of the wheel facing up, fill the area inside the wheel around the axle full of general-purpose grease.
11. Insert the second bearing and new seal into the wheel.
12. Apply a thread locking adhesive to the 2nd spacer nut and thread onto the axle with the wrench flats facing outward.

13. Torque the nut to 75-80 in-lb (8-9 N-m), loosen, then re-torque to 20-25 in-lb (2-3 N-m). Make sure axle does not extend beyond either nut.
14. Reinstall the seal guards over the wheel hub and insert wheel into caster fork. Reinstall caster bolt and tighten nut fully.

Important: To prevent seal and bearing damage, check the bearing adjustment often. Spin the caster tire. The tire should not spin freely (more than 1 or 2 revolutions) or have any side play. If the wheel spins freely, adjust torque on spacer nut until there is a slight amount of drag. Reapply thread locking adhesive.

Engine Maintenance

Servicing the Air Cleaner

Service Interval/Specification

Inspect the foam and paper elements and replace them if they are damaged or excessively dirty.

Note: Service the air cleaner more frequently (every few operating hours) if the operating conditions are extremely dusty or sandy.

Important: Do not oil the foam or paper element.

Removing the Foam and Paper Elements (FH Model Engines)

1. Disengage the PTO and set the parking brake.
2. Stop the engine, remove the key, and wait for all moving parts to stop before leaving the operating position.
3. Clean around the air cleaner to prevent dirt from getting into the engine and causing damage (Figure 41).
4. Unscrew the cover knob and remove the air cleaner cover (Figure 41).
5. Remove the wing nuts and remove the air cleaner assembly (Figure 41).
6. Carefully pull the foam element off the paper element (Figure 41).

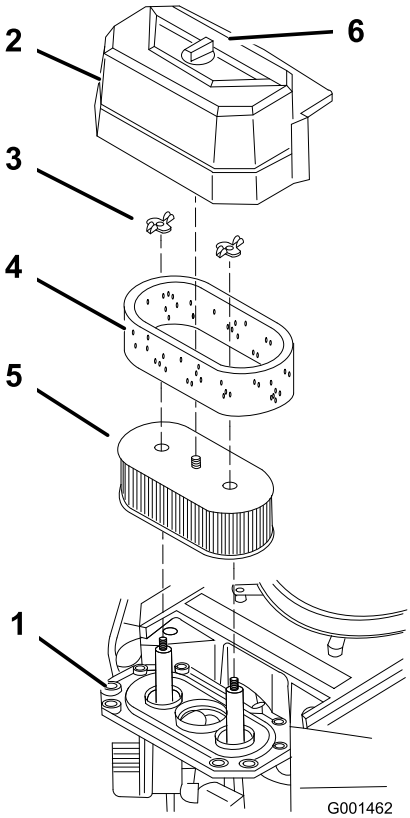

Figure 41

FH Model Engine Shown

1. Engine
2. Cover
3. Wing nut
4. Foam element
5. Paper element
6. Cover knob

Removing the Foam and Paper Elements (FS Model Engines)

1. Disengage the PTO and set the parking brake.
2. Stop the engine, remove the key, and wait for all moving parts to stop before leaving the operating position.
3. Clean around the air cleaner to prevent dirt from getting into the engine and causing damage (Figure 42).
4. Unscrew the cover knobs and remove the air cleaner cover (Figure 42).
5. Unscrew the hose clamp and remove the air cleaner assembly (Figure 42).
6. Carefully pull the foam element off the paper element (Figure 42).

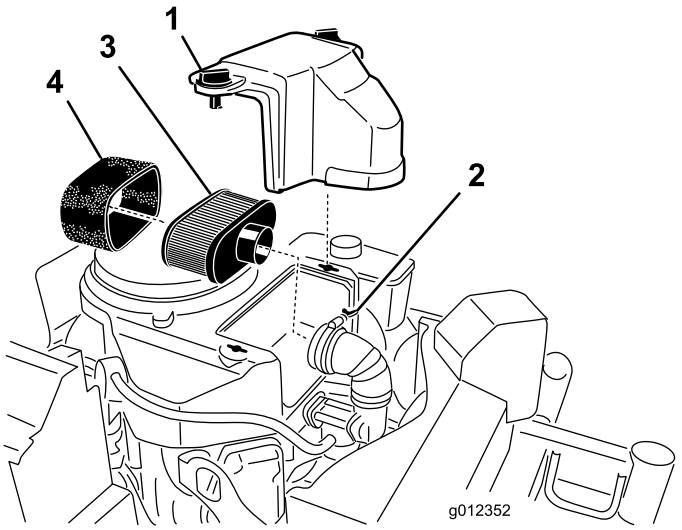

Figure 42

FS Model Engine Shown

1. Cover
2. Hose clamp
3. Paper element
4. Foam element

Cleaning the Foam Air Cleaner Element

Service Interval: Every 25 hours

1. Wash the foam element in liquid soap and warm water. When the element is clean, rinse it thoroughly.
2. Dry the element by squeezing it in a clean cloth.

Important: Replace the foam element if it is torn or worn.

Servicing the Paper Air Cleaner Element

Service Interval: Every 50 hours—Check the paper air cleaner element.

Every 200 hours—Replace the paper air cleaner element.

1. Do not clean the paper filter, replace it (Figure 41).
2. Inspect the element for tears, an oily film, or damage to the rubber seal.
3. Replace the paper element if it is damaged.

Installing the Foam and Paper Elements

Important: To prevent engine damage, always operate the engine with the complete foam and paper air cleaner assembly installed.

1. Carefully slide the foam element onto the paper air cleaner element (Figure 41).

2. Place the air cleaner assembly onto the air cleaner base or hose and secure it (Figure 41).
3. Place the air cleaner cover into position and tighten the cover knob (Figure 41).

Servicing the Engine Oil

Service Interval: Before each use or daily—Check the engine oil level.

After the first 8 hours—Change the engine oil.

Every 100 hours—Change the engine oil. (more often in dirty or dusty conditions)

Every 200 hours—Change the engine oil filter.

Note: Change the oil more frequently when the operating conditions are extremely dusty or sandy.

Note: There are different oil capacities for the different models listed in this manual. Ensure the correct amount of oil is used.

Important: Remember to add 80% of the oil and then gradually fill it to the full mark on the dipstick.

Oil Type: Detergent oil (API service SF, SG, SH, SJ or SL)

Crankcase Capacity for 20hp and 25hp Engines: 58 ounces (1.7 liter) with the filter removed; 51 ounces (1.5 liter) without the filter removed

Crankcase Capacity for 24hp and 26hp Engines: 71 ounces (2.1 liter) with the filter removed; 61 ounces (1.8 liter) without the filter removed

Viscosity: Refer to the table below

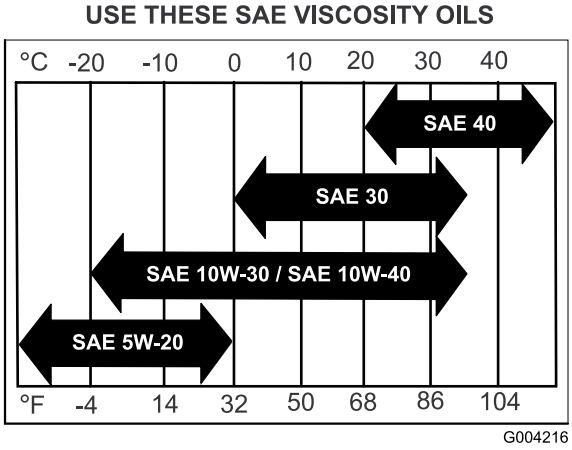

Figure 43

Checking the Engine Oil Level

Note: Check the oil when the engine is cold.

⚠ WARNING

Contact with hot surfaces may cause personal injury.

Keep hands, feet, face, clothing and other body parts away the muffler and other hot surfaces.

Important: Do not overfill the crankcase with oil because damage to the engine may result. Do not run engine with oil below the low mark because the engine may be damaged.

1. Disengage the PTO, move the motion control levers to the neutral locked position and set the parking brake.
2. Stop the engine, remove the key, and wait for all moving parts to stop before leaving the operating position (Figure 44).

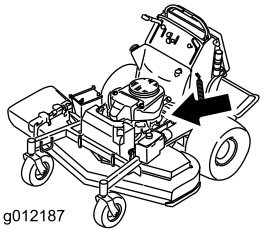

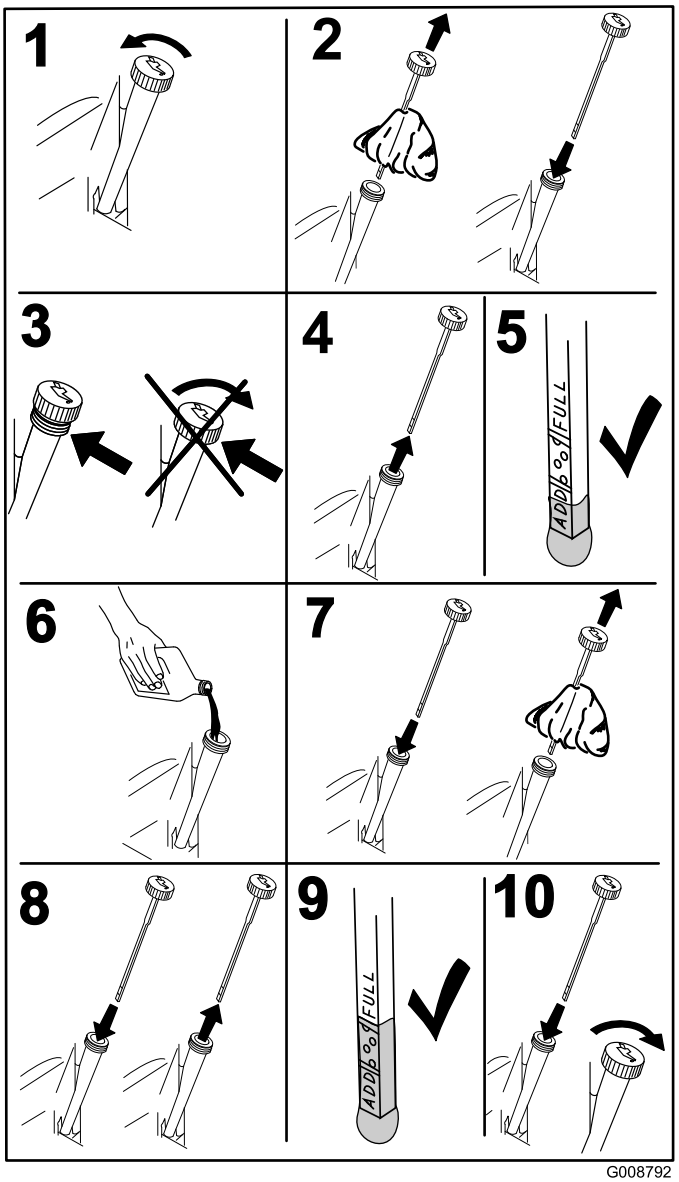

Figure 44

Changing the Engine Oil

Note: Dispose of the used oil at a recycling center.

1. Start the engine and let it run five minutes. This warms the oil so it drains better.
2. Park the machine so that the drain side is slightly lower than the opposite side to assure the oil drains completely.
3. Disengage the PTO, move the motion control levers to the neutral locked position and set the parking brake.
4. Stop the engine, remove the key, and wait for all moving parts to stop before leaving the operating position (Figure 45).

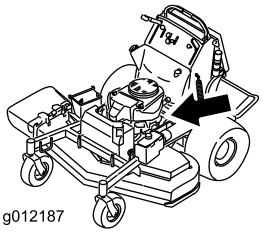

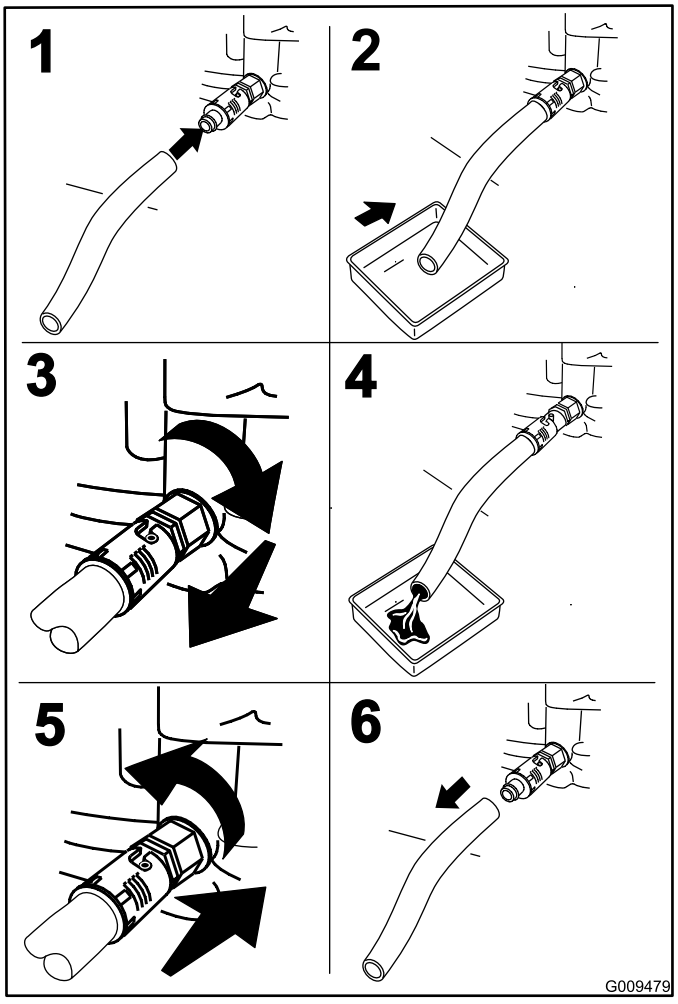

Figure 45

5. Slowly pour approximately 80% of the specified oil into the filler tube and slowly add the additional oil to bring it to the **Full** mark (Figure 46).

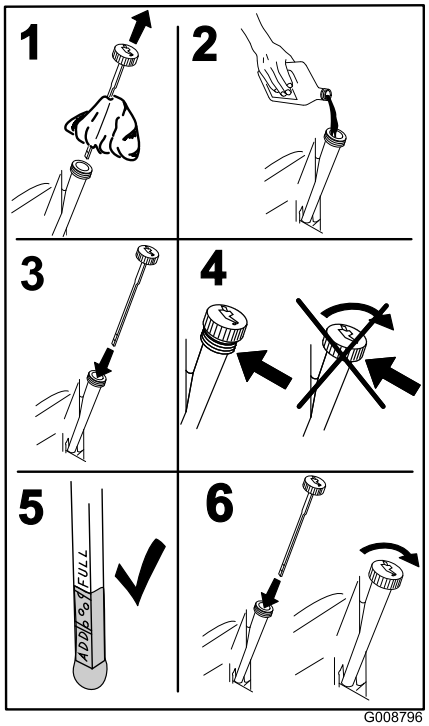

Figure 46

Changing the Engine Oil Filter

Note: Change the engine oil filter more frequently when operating conditions are extremely dusty or sandy.

1. Drain the oil from the engine; refer to Changing the Engine Oil.
2. Place a rag under the oil filter to soak up any spilled oil.

   Important: Spilled oil may drain under the engine and onto the clutch. Oil spilled on the clutch may damage the clutch, cause the blades to stop slowly when the clutch is switched off and cause the clutch to slip when the clutch is switched on. Wipe up any spilled oil.
3. Change the engine oil filter (Figure 47).

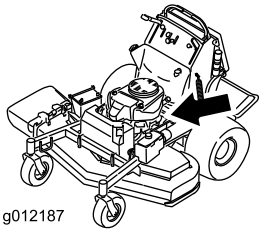

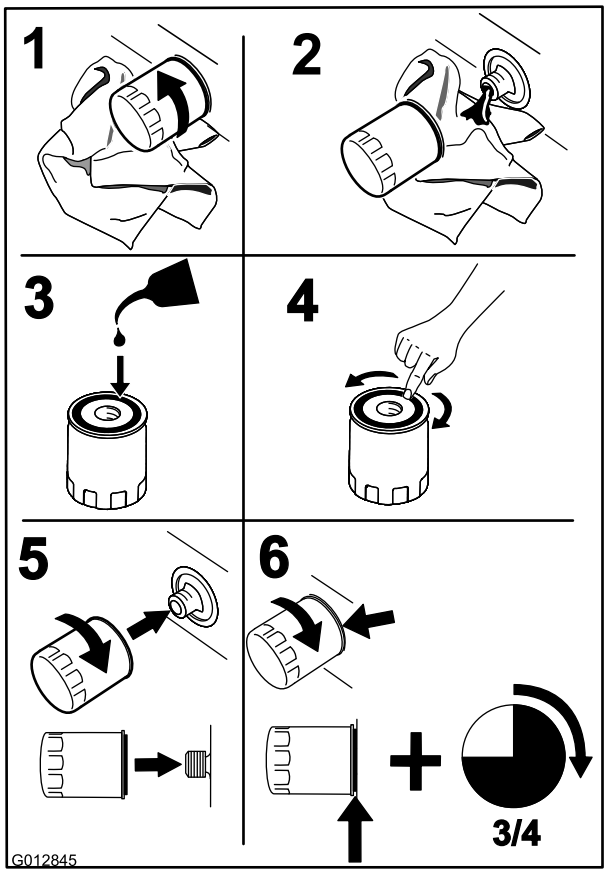

Figure 47

   Note: Ensure the oil filter gasket touches the engine and then an extra 3/4 turn is completed.
4. Fill the crankcase with the proper type of new oil; refer to Changing the Oil.

Servicing the Spark Plug

Service Interval: Every 100 hours

Make sure the air gap between the center and side electrodes is correct before installing the spark plug. Use a spark plug wrench for removing and installing the spark plug(s) and a gapping tool/feeler gauge to check and adjust the air gap. Install a new spark plug(s) if necessary.

Type for all Engines: NGK® BPR4ES or equivalent

Air Gap: 0.030 inch (0.75 mm)

Removing the Spark Plug

1. Disengage the PTO, move the motion control levers to the neutral locked position and set the parking brake.
2. Stop the engine, remove the key, and wait for all moving parts to stop before leaving the operating position.

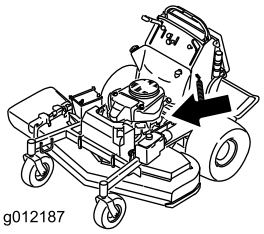

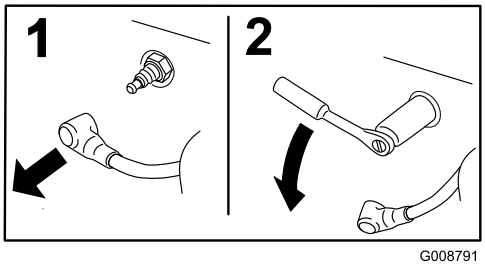

Figure 48

Checking the Spark Plug

Important: Never clean the spark plug(s). Always replace the spark plug(s) when it has: a black coating, worn electrodes, an oily film, or cracks.

If you see light brown or gray on the insulator, the engine is operating properly. A black coating on the insulator usually means the air cleaner is dirty.

Set the gap to 0.030 inches (0.75 mm).

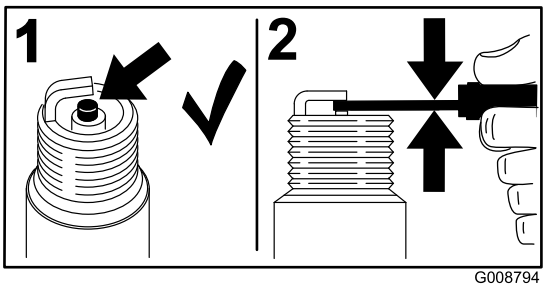

Figure 49

Installing the Spark Plug

Tighten the spark plug(s) to 16 ft.-lb (22 N-m).

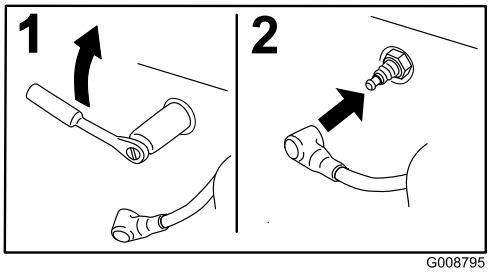

Figure 50

Fuel System Maintenance

Draining the Fuel Tank

Note: There is no other recommended way to drain fuel from the tank, other than using a syphon pump. A syphon pump can be purchased at a hardware store.

⚠ DANGER

In certain conditions, gasoline is extremely flammable and highly explosive. A fire or explosion from gasoline can burn you and others and can damage property.

- **Drain gasoline from the fuel tank when the engine is cold. Do this outdoors in an open area. Wipe up any gasoline that spills.**
- **Never smoke when draining gasoline, and stay away from an open flame or where a spark may ignite the gasoline fumes.**

1. Park the machine on a level surface. Disengage the power take off (PTO), set the parking brake, turn the ignition key to **Off** and remove the key.
2. Clean around the fuel cap to prevent debris from getting into the fuel tank (Figure 52).
3. Remove the fuel cap.
4. Insert a syphon pump into the fuel tank.
5. Using the syphon pump, drain the fuel into a clean gas can (Figure 51).
6. Wipe up any spilled fuel.

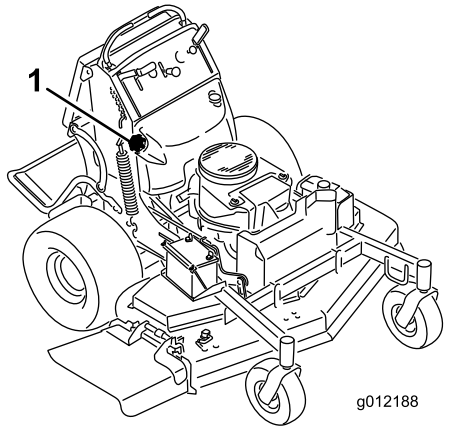

Figure 51

1. Fuel cap

Servicing the Fuel Filter

Replacing the Fuel Filter

Service Interval: Every 800 hours/Yearly (whichever comes first)

Never install a dirty filter if it is removed from the fuel line.

Note: Note how the fuel filter is installed in order to install the new filter correctly.

Note: Wipe up any spilled fuel.

1. Disengage the PTO and set the parking brake.
2. Stop the engine, remove the key, and wait for all moving parts to stop before leaving the operating position.
3. Close fuel shut-off valve.
4. Squeeze the ends of the hose clamps together and slide them away from the filter (Figure 52).

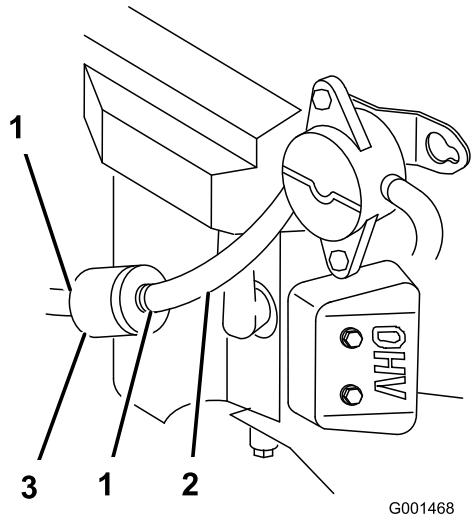

Figure 52

1. Hose clamp
2. Fuel line
3. Filter

5. Remove the filter from the fuel lines.
6. Install a new filter and move the hose clamps close to the filter.
7. Open the fuel shut-off valve.
8. Check for fuel leaks and repair if needed.
9. Wipe up any spilled fuel.

Electrical System Maintenance

Servicing the Battery

Service Interval: Every 100 hours

Always keep the battery clean and fully charged. Use a paper towel to clean the battery case. If the battery terminals are corroded, clean them with a solution of four parts water and one part baking soda. Apply a light coating of grease to the battery terminals to prevent corrosion.

Voltage: 12 V

WARNING

CALIFORNIA
Proposition 65 Warning

Battery posts, terminals, and related accessories contain lead and lead compounds, chemicals known to the State of California to cause cancer and reproductive harm. Wash hands after handling.

⚠ DANGER

Battery electrolyte contains sulfuric acid which is a deadly poison and causes severe burns.

Do not drink electrolyte and avoid contact with skin, eyes or clothing. Wear safety glasses to shield your eyes and rubber gloves to protect your hands.

Removing the Battery

⚠ WARNING

Battery terminals or metal tools could short against metal machine components causing sparks. Sparks can cause the battery gasses to explode, resulting in personal injury.

- **When removing or installing the battery, do not allow the battery terminals to touch any metal parts of the machine.**
- **Do not allow metal tools to short between the battery terminals and metal parts of the machine.**

⚠ WARNING

Incorrect battery cable routing could damage the machine and cables causing sparks. Sparks can cause the battery gasses to explode, resulting in personal injury.

- **Always Disconnect the negative (black) battery cable before disconnecting the positive (red) cable.**
- **Always Reconnect the positive (red) battery cable before reconnecting the negative (black) cable.**

1. Disengage the PTO and set the parking brake.
2. Stop the engine, remove the key, and wait for all moving parts to stop before leaving the operating position.
3. Lift the black rubber cover on the negative cable. Disconnect the negative battery cable from the negative (-) battery terminal (Figure 53).
4. Slide the red terminal boot off the positive (red) battery terminal. Then remove the positive (red) battery cable (Figure 53).
5. Remove the battery hold down plate (Figure 53) and remove the battery.

Installing the Battery

1. Place the battery onto the machine (Figure 53).
2. Secure the battery with the hold down plate, j-bolts, and locknuts.
3. First, install the positive (red) battery cable to positive (+) battery terminal with a nut, washer and bolt (Figure 53). Slide the rubber cover over the post.
4. Then install the negative battery cable and ground wire to the negative (-) battery terminal with a nut, washer and bolt (Figure 53). Slide the rubber cover over the post.

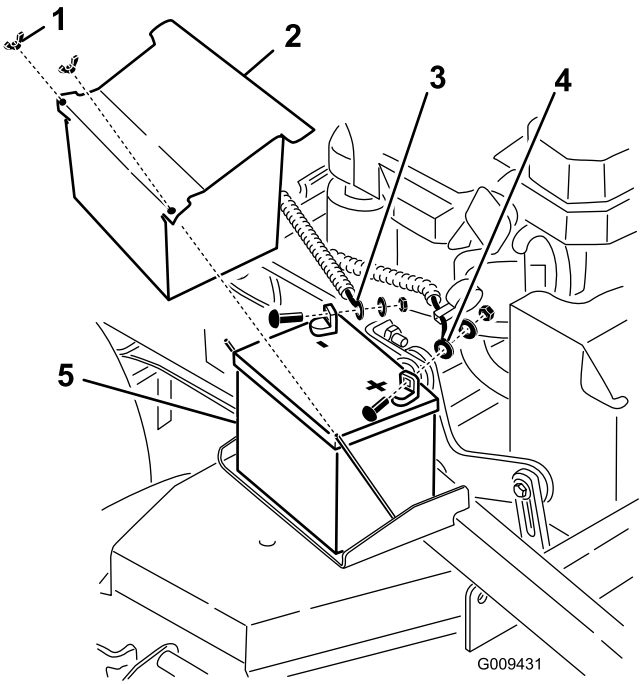

Figure 53

1. Wing nut
2. Battery cover
3. Negative battery cable
4. Positive battery cable
5. Battery

Charging the Battery

⚠ WARNING

Charging the battery produces gasses that can explode.

Never smoke near the battery and keep sparks and flames away from battery.

Important: Always keep the battery fully charged (1.265 specific gravity). This is especially important to prevent battery damage when the temperature is below 32°F (0°C).

1. Remove the battery from the chassis; refer to Removing the Battery.
2. Check the electrolyte level; refer to Checking the Electrolyte Level.
3. Make sure the filler caps are installed in battery. Charge battery for 1 hour at 25 to 30 amps or 6 hours at 4 to 6 amps.
4. When the battery is fully charged, unplug the charger from the electrical outlet, then disconnect the charger leads from the battery posts (Figure 54).
5. Install the battery onto the machine and connect the battery cables, refer to Installing the Battery.

   Note: Do not run the machine with the battery disconnected, electrical damage may occur.

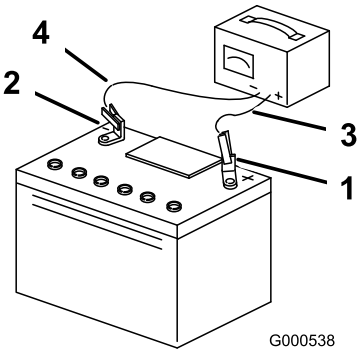

Figure 54

1. Positive Battery Post
2. Negative Battery Post
3. Red (+) Charger Lead
4. Black (-) Charger Lead

Servicing the Fuses

The electrical system is protected by fuses. It requires no maintenance. If a fuse blows, check the component or circuit for a malfunction or short.

1. Release the cushion from the rear of the machine.
2. Pull out on the fuse to remove or replace it (Figure 55).
3. Install the cover under the cusion.

   Note: Ensure the correct size fuse is install with the correct wire color as shown in Figure 55.

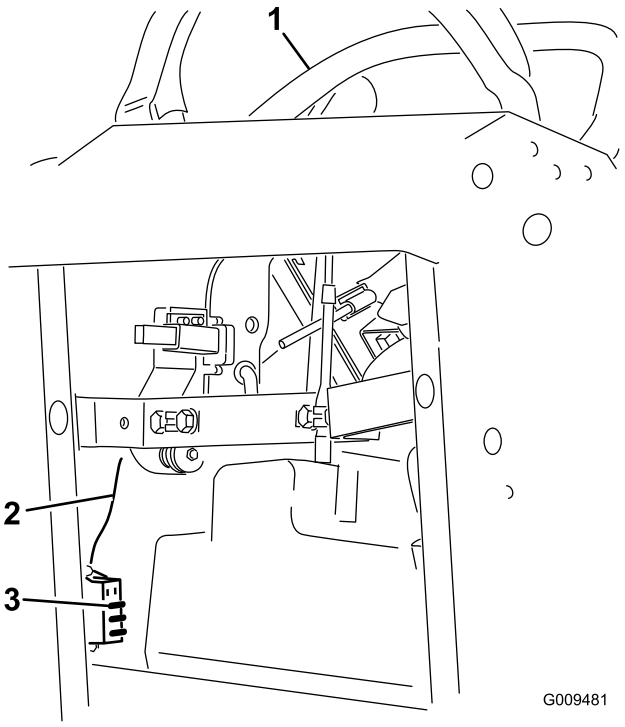

Figure 55

1. Controls
2. Wire
3. Fuses

Drive System Maintenance

Adjusting the Tracking

Note: Determine the left and right sides of the machine from the normal operating position.

1. Push both control levers forward the same distance.
2. Check if the machine pulls to one side. If it does, stop the machine and set the parking brake.
3. Release the cushion from the rear of the machine.
4. Rotate the right cable adjustment to position the right motion control in the center of the control panel neutral lock slot. Then, rotate the left cable adjustment to match the left wheel speed to the previously set right wheel speed. (Figure 56).
5. Rotate the left cable adjustment to match the left wheel speed to the previously set right wheel speed. Adjust in quarter-turn increments until the machine tracks straight.

   Note: Only adjust the left cable to match the left wheel speed to the right wheel speed. Do not adjust the right wheel speed as this will position the right motion control lever out of the center for the control panel neutral lock slot.
6. Check for proper tracking.

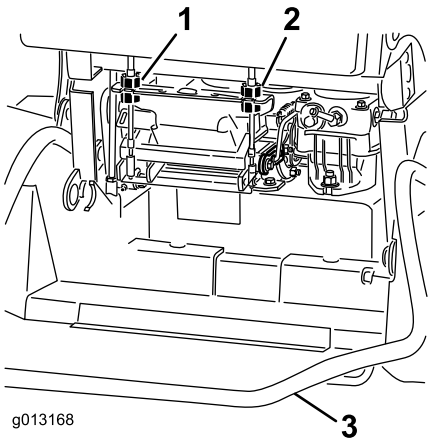

Figure 56

1. Left cable adjustment
2. Right cable adjustment
3. Platform down

7. Repeat adjustment until the tracking is correct.
8. Check that the machine does not creep from neutral with the park brakes disengaged.

Important: Do Not rotate the linkage too far, as this may cause the machine to creep in neutral.

Checking the Tire Pressure

Service Interval: Every 50 hours/Monthly (whichever comes first)

Maintain the air pressure in the rear tires at 12-14 psi (83-97 kPa). Uneven tire pressure can cause an uneven cut.

Note: The front tires are semi-pneumatic tires and do not require air pressure maintenance.

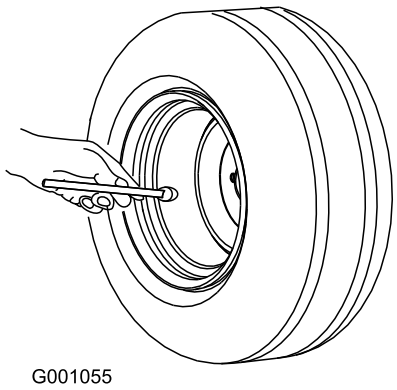

G001055

Figure 57

Adjusting the Caster Pivot Bearing

Service Interval: Every 500 hours/Yearly (whichever comes first)

1. Disengage the blade control switch (PTO), move the motion control levers to the neutral locked position and set the parking brake.
2. Stop the engine, remove the key, and wait for all moving parts to stop before leaving the operating position.
3. Remove the dust cap from caster and tighten lock nut (Figure 58).
4. Tighten the locknut until the spring washers are flat and then back off a 1/4 turn to properly set the pre-load on the bearings (Figure 58).

   Important: Make sure spring washers are installed correctly as shown in Figure 58.

5. Install the dust cap (Figure 58).

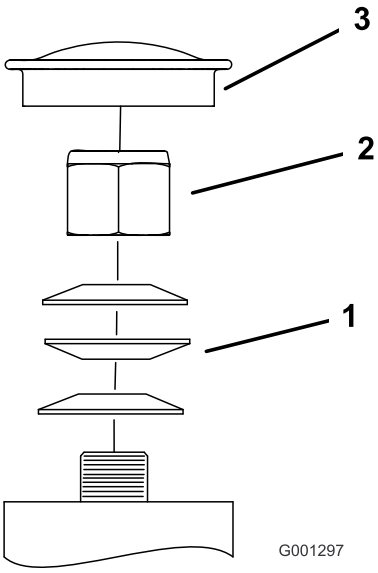

Figure 58

1. Spring Washers
2. Lock Nut
3. Dust Cap

Servicing the Caster Wheel and Bearings

The caster wheels rotate on a roller bearing supported by a spanner bushing. If the bearing is kept well lubricated, wear will be minimal. Failure to keep the bearing well lubricated will cause rapid wear. A wobbly caster wheel usually indicates a worn bearing.

1. Remove the locknut and wheel bolt holding the caster wheel to the caster fork (Figure 59).

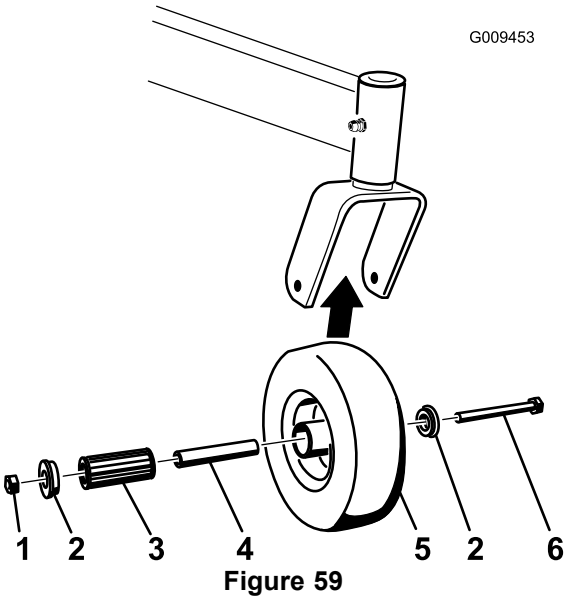

Figure 59

1. Locknut
2. Wheel Bolt
3. Bushing
4. Spanner Bushing
5. Roller Bearing

2. Remove one bushing, then pull the spanner bushing and roller bearing out of the wheel hub (Figure 59).
3. Remove the other bushing from the wheel hub and clean any grease and dirt from the wheel hub (Figure 59).
4. Inspect the roller bearing, bushings, spanner bushing and inside of the wheel hub for wear. Replace any defective or worn parts (Figure 59).
5. To assemble, place one bushing into the wheel hub. Grease the roller bearing and spanner bushing and slide them into the wheel hub. Place the second bushing into the wheel hub (Figure 59).
6. Install the caster wheel into the caster fork and secure with the wheel bolt and locknut. Tighten the locknut until the spanner bushing bottoms against the inside of the caster forks (Figure 59).
7. Grease the fitting on the caster wheel.

Adjusting the Electric Clutch

Service Interval: Every 500 hours—Check the electric clutch.

The clutch is adjustable to ensure proper engagement and proper braking.

1. Insert a 0.015–0.021 inch (0.381-0.533 mm) feeler gauge through one inspection slot in the side of the assembly. Make sure it is between the armature and the rotor friction surfaces.

   The gap needs to be at least .015 inches (0.381 mm) and not more than .021 inches (0.533 mm).
2. If adjustment is needed, then set at .015 inches (0.381 mm) for each of the three adjustment slot positions. Tighten the lock nuts until there is slight binding on the feeler gauge but it can be moved easily within the air gap (Figure 60).
3. Repeat this for the remaining slots.
4. Check each slot again and make slight adjustments until the feeler gauge between the rotor and armature with very slight contact between them.

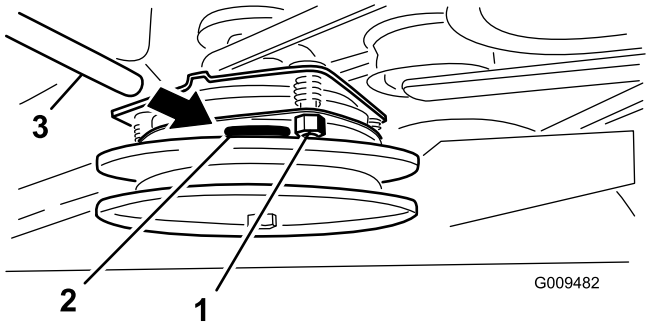

Figure 60

1. Adjusting nut
2. Slot
3. Feeler gauge

Cooling System Maintenance

Cleaning the Air Intake Screen

Service Interval: Before each use or daily

Before each use remove any build-up of grass, dirt or other debris from the cylinder and cylinder head cooling fins, air intake screen on flywheel end, and carburetor-governor levers and linkage. This will help insure adequate cooling and correct engine speed and will reduce the possibility of overheating and mechanical damage to the engine.

Cleaning the Cooling System

Service Interval: Every 100 hours—Check and clean engine cooling fins and shrouds.

1. Disengage the PTO and set the parking brake.
2. Stop the engine, remove the key, and wait for all moving parts to stop before leaving the operating position.
3. Remove the air intake screen and fan housing (Figure 61).
4. Clean the debris and grass from the engine parts.
5. Install air intake screen, recoil starter and fan housing (Figure 61).

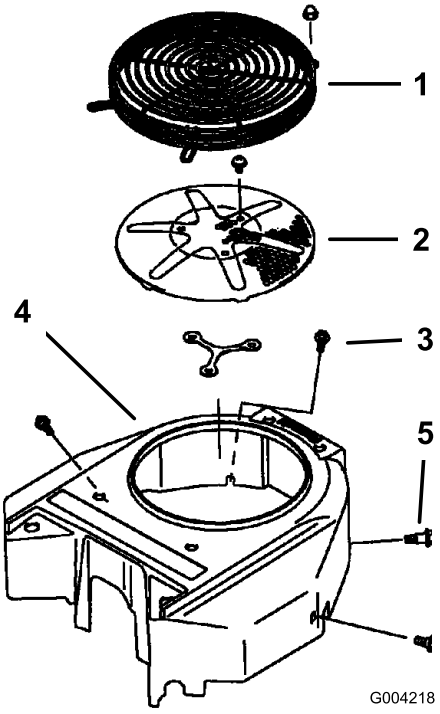

Figure 61

1. Guard
2. Engine air intake screen
3. Bolt
4. Fan housing
5. Screw

Brake Maintenance

Servicing the Brake

Before each use, check brakes on both a level surface and slope.

Always set the parking brake when you stop the machine or leave it unattended. If the parking brake does not hold securely, an adjustment is required.

Checking the Parking Brake

Service Interval: Before each use or daily

1. Park the machine on a level surface, disengage the PTO.
2. Stop the engine, remove the key, and wait for all moving parts to stop before leaving the operating position.
3. Release the brake. The brake bars should lift off the tires and the hand lever should travel forward to the end of the slot in the control panel. Adjust the brake if needed.
4. Engage the brake lever until the brake bars first contact the tire (Figure 62).
5. Measure the gap from the front of the hand lever to the end of the slot in the control panel when the brake bar contacts the tire. This measurement needs to be 3/4 inch (19 mm). Adjust the brake if needed (Figure 62).

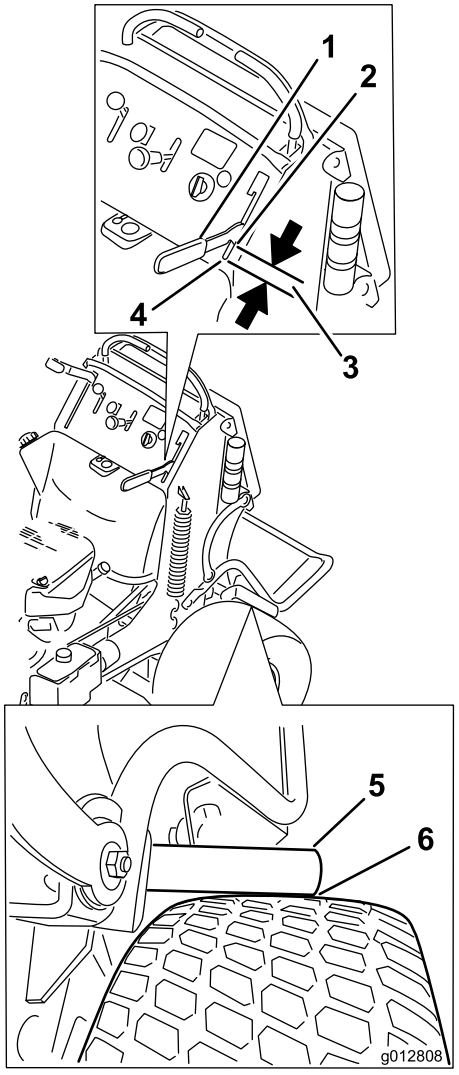

Figure 62

1. Hand lever
2. Front of hand lever
3. 3/4 inch (19 mm) gap
4. Front of slot
5. Brake bar
6. Brake bar just touching the tire

Adjusting the Brakes

If the parking brake does not hold securely, an adjustment is required.

1. Check the brake before you adjust it; refer to Checking the Brakes.
2. Park the machine on a level surface, disengage the PTO, and set the parking brake.
3. Stop the engine, remove the key, and wait for all moving parts to stop before leaving the operating position.
4. Release the parking brake; refer to Releasing the Parking Brake Operation.
5. To adjust the brake, remove the hair pin cotter and clevis pin from the lower brake lever and yoke (Figure 63).

6. Loosen the jam nut (Figure 63).
7. Rotate the yoke. To tighten the brake, rotate the yoke up. To loosen the brake, rotate the yoke down (Figure 63).
8. Secure the yoke to lower brake lever with the hair pin cotter pin and clevis pin (Figure 63).
9. Tighten the jam nut (Figure 63).
10. Check the brake operation again; refer to Checking the Brake.

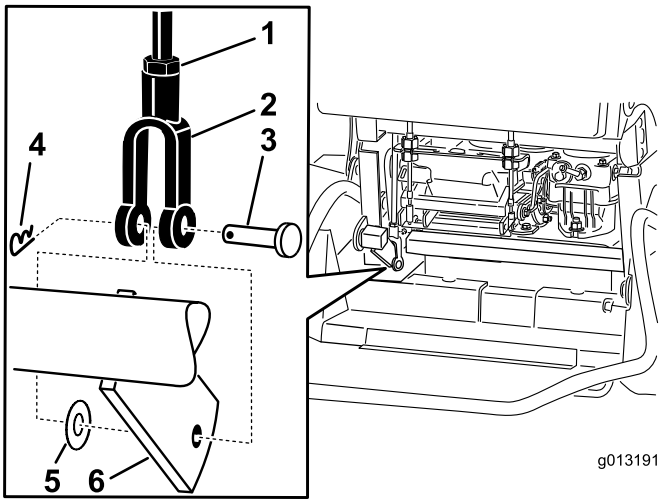

Figure 63

1. Jam Nut
2. Yoke
3. Clevis pin
4. Hairpin cotter pin
5. Flat washer
6. Lower brake lever

11. After the brake is adjusted, the lever switch needs to be checked.
12. Check the gap between the brake lever and the face of the switch as shown in Figure 64. The gap needs to be an 1/8 inch (3mm) with the brake **engaged**.
13. If needed, loosen the screws holding the switch and adjust the switch.

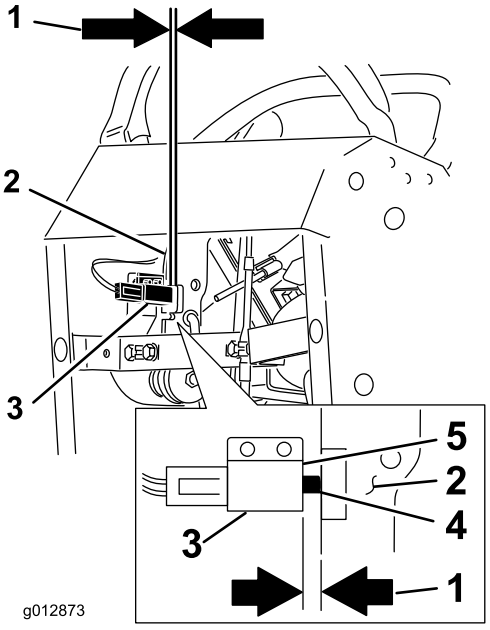

Figure 64

1. 1/8 inch (3mm) gap needed between switch and brake lever
2. Brake lever
3. Switch
4. Switch button
5. Face of the switch

Belt Maintenance

Replacing the Mower Deck Belt

Service Interval: Every 100 hours—Check the mower deck belt.

Squealing when the belt is rotating, blades slipping when cutting grass, frayed belt edges, burn marks and cracks are signs of a worn deck belt. Replace the deck belt if any of these conditions are evident.

1. Disengage the PTO and set the parking brake.
2. Stop the engine, remove the key, and wait for all moving parts to stop before leaving the operating position.
3. Unlatch and remove the belt covers.
4. Loosen the front idler pulley by loosening the nut.
5. Remove the worn mower belt (Figure 65).
6. Install the new mower belt around the deck pulleys and clutch pulley (Figure 65).
7. Using a ratchet in the idler arm, tighten the idler pulley until the spring is stretched 5-3/4 inches (14.6 cm) from hook to hook (Figure 65).
8. Tighten the front idler pulley by tightening the nut.
9. Install the belt covers onto the cutting unit and secure the latches.

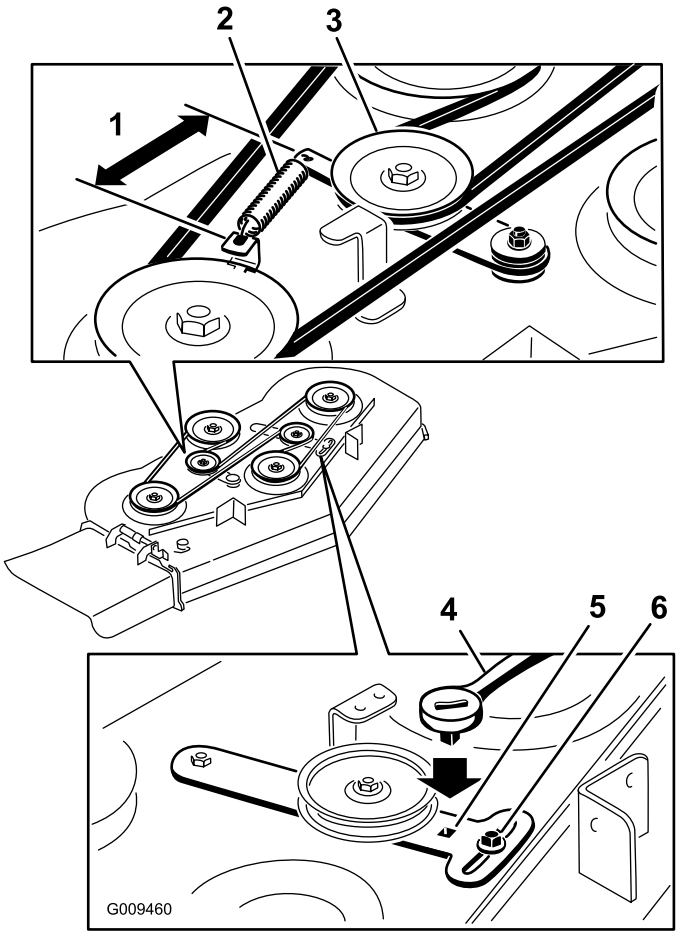

Figure 65

1. 5-3/4 inches (14.6 cm) from hook to hook
2. Spring
3. Spring loaded idler
4. Ratchet
5. Square hole for ratchet
6. Nut

Replacing the Pump Drive Belt

Service Interval: Every 100 hours—Check the pump drive belt.

1. Disengage the PTO and set the parking brake.
2. Stop the engine, remove the key, and wait for all moving parts to stop before leaving the operating position.
3. Remove the mower deck belt.
4. Tilt the machine on it's back. Refer to Pre-Maintenance at the beginning of the Maintenance Section.
5. Release the spring from the engine deck (Figure 66).

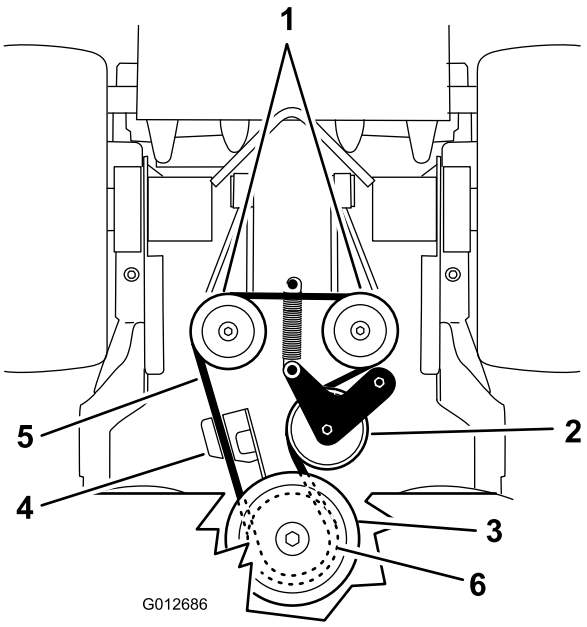

Figure 66

1. Hydraulic pumps
2. Idler pulley
3. Clutch pulley
4. Clutch retainer
5. Pump drive belt

6. Remove the pump drive belt (Figure 66).
7. Install the new belt around clutch and the two pump pulleys.
8. Install the spring to the engine deck (Figure 66).
9. Lower the machine to the operating position. Refer to Pre-Maintenance at the beginning of the Maintenance Section.
10. Install the mower deck belt.

Controls System Maintenance

Adjusting the Motion Control Handle Positions

Adjusting the Right Side Motion Control Lever

If the motion control levers do not align horizontally, adjust the right side motion control lever.

Note: Adjust the horizontal alignment before the front to back alignment.

1. Disengage the PTO, move the right side motion control lever to the neutral position and set the parking brake.
2. Stop the engine, remove the key, and wait for all moving parts to stop before leaving the operating position.
3. Push the right motion control lever down out of locked neutral position (Figure 67).
4. Check if it aligns horizontally with the left motion control lever (Figure 67).

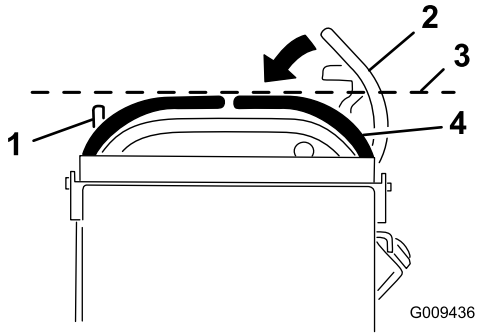

Figure 67

1. Left motion control lever
2. Right motion control lever in neutral locked position
3. Check the horizontal alignment here
4. Right motion control lever

5. To adjust the right motion control lever horizontally, the cam needs to be adjusted.
6. Release the cushion from the rear of the machine.
7. Loosen the nut and bolt holding the cam (Figure 68).
8. Adjust the cam until it aligns with the left motion control lever and tighten the nut and bolt for the cam.

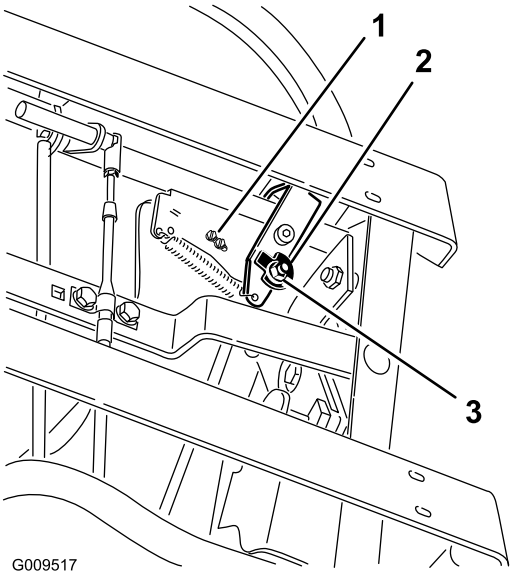

Figure 68

1. Switch screws
2. Cam
3. Nut and bolt

9. After the cam is adjusted, the lever switch needs to be checked.
10. Check the gap between the control lever and switch as shown in Figure 69. The gap needs to be an 1/8 inch (3mm) with the right motion control lever in the neutral, unlocked position.
11. If needed, loosen the screws holding the switch and adjust the switch (Figure 68 and Figure 69).

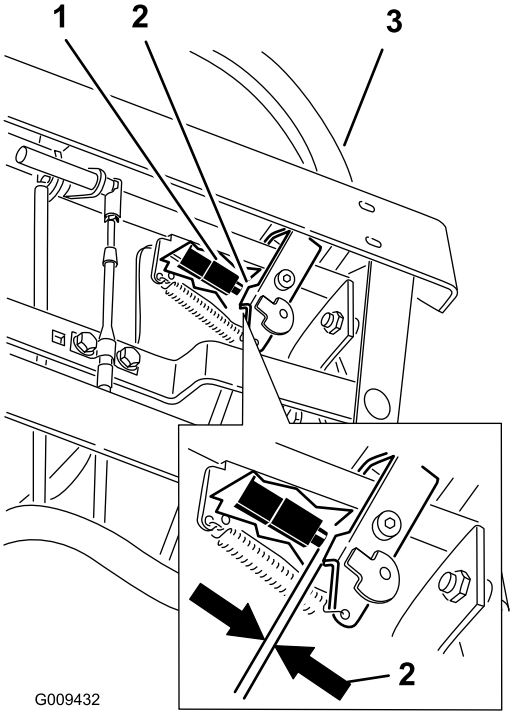

Figure 69

1. Switch
2. 1/8 inch (3mm)
3. Right motion control lever in the neutral unlocked position

12. Tighten the switch screws.

Adjusting the Neutral Postion for the Motion Control Levers

Important: Ensure the tracking of the mower is correct after adjusting the motion control levers. Adjusting the tracking and aligning the motion control levers front to back is the same procedure (Figure 70).

Note: Adjust the horizontal alignment before the front to back alignment.

If the motion control levers do not align front to back, or the right side control lever does not move easily into the neutral lock position, adjustment is required.

1. After the horizontal alignment is finished, check the front to back alignment (Figure 70).

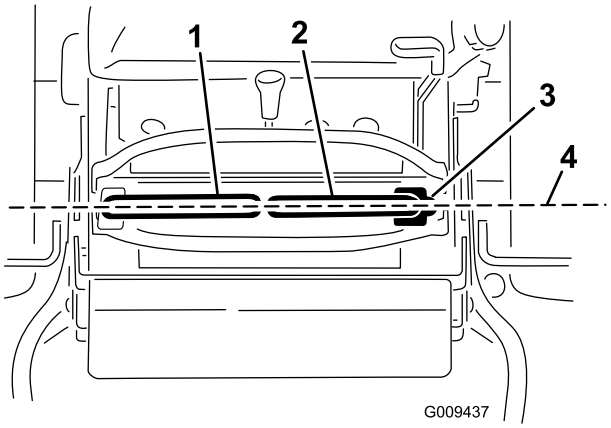

Figure 70

1. Left motion control lever
2. Right motion control lever
3. Neutral locked position
4. Align the control levers front to back

2. Rotate the right cable adjustment to place the right motion control lever in the center of the neutral lock slot in the control panel.
3. Rotate the left cable adjustment to place the left motion control lever alignment equal with the right motion control lever. This will provide an approximate equal tracking of the left wheel speed to the right wheel speed.
4. Check for proper tracking. Refer to Adjusting the Tracking in the Maintenance Section.

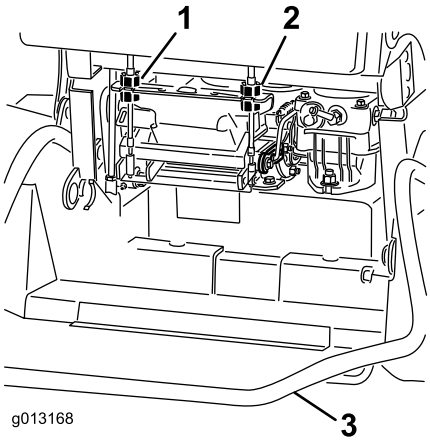

Figure 71

1. Left cable adjustment
2. Right cable adjustment
3. Platform down

Hydraulic System Maintenance

Servicing the Hydraulic System

Hydraulic Oil Type: Toro® HYPR-OIL™ 500 hydraulic oil or Mobil® 1 15W-50 synthetic motor oil.

Hydraulic System Oil Capacity: 67 oz. (2.0 l)

Important: Use oil specified. Other fluids could cause system damage.

Checking the Hydraulic Fluid

Service Interval: After the first 8 hours

Every 50 hours

Note: There are two ways of checking the hydraulic oil. One is when the oil is warm and one is when the oil is cold. The baffle inside the tank has two levels depending if the oil is warm or cold.

1. Position machine on a level surface.
2. Disengage the power take off (PTO) and shut off the engine.
3. Wait for all moving parts to stop before leaving the operating position and then set the parking brake.
4. Clean area around cap and filler neck of hydraulic tank (Figure 72).

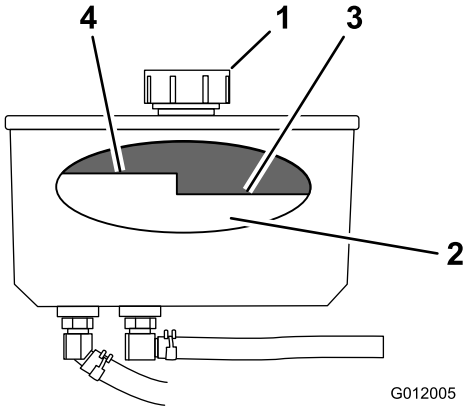

Figure 72

1. Cap
2. Baffle
3. Cold fluid level-full
4. Hot fluid level-full

5. Remove cap from filler neck. Look inside to check the fluid level in the reservoir. (Figure 72).
6. Add fluid to the reservoir until it reaches the cold level of the baffle.

7. Run the machine at low idle for 15 minutes to allow any air to purge out of the system and warm fluid. Refer to Starting and Stopping the Engine.
8. Recheck the fluid level while the fluid is warm. If required, add fluid to the reservoir until it reaches the hot level of the baffle.

   Note: The fluid level should be to the top of the hot level of the baffle, when the fluid is warm (Figure 72).
9. Install cap on filler neck.

⚠ WARNING

Hydraulic fluid escaping under pressure can penetrate skin and cause injury.

- **If hydraulic fluid is injected into the skin it must be surgically removed within a few hours by a doctor familiar with this type of injury. Gangrene may result if this is not done.**
- **Keep body and hands away from pin hole leaks or nozzles that eject high pressure hydraulic fluid.**
- **Use cardboard or paper to find hydraulic leaks.**
- **Safely relieve all pressure in the hydraulic system before performing any work on the hydraulic system.**
- **Make sure all hydraulic fluid hoses and lines are in good condition and all hydraulic connections and fittings are tight before applying pressure to hydraulic system.**

Replacing the Hydraulic Fluid

Service Interval: Every 250 hours—Change the hydraulic filter and hydraulic oil when using Mobil® 1 oil.

Every 500 hours—Change the hydraulic filter and hydraulic oil when using Toro® HYPR-OIL™ 500 hydraulic oil.

⚠ WARNING

Hot hydraulic fluid can cause severe burns.

Allow the hydraulic fluid to cool before performing any maintenance to the hydraulic system.

1. Disengage the PTO and set the parking brake.
2. Stop the engine and wait for all moving parts to stop before leaving the operating position.
3. Remove hydraulic reservoir cap.
4. Locate the front hydraulic hose under the hydraulic tank and place drain pan under the tank (Figure 73).
5. Loosen the hose clamp and move it down the hose.
6. Remove the front hydraulic hose and allow the fluid to run out of the tank.

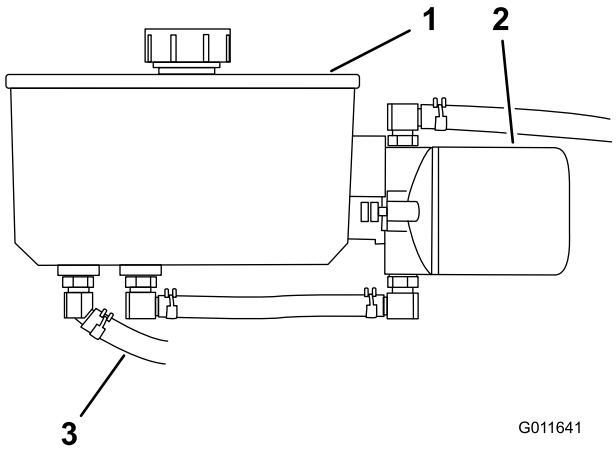

Figure 73

1. Hydraulic tank
2. Hydraulic filter
3. Front hydraulic hose

7. Change the hydraulic filter. Refer to Replacing the Hydraulic Filter.
8. Connect the hydraulic hose under the tank.
9. Add fluid to the tank until it reaches the cold baffle of the tank.

   Important: Use oil specified or equivalent. Other fluids could cause system damage.
10. Install the hydraulic tank cap.
11. Start engine and let run for about two minutes to purge air from the system. Stop the engine and check for leaks. If one or both wheels will not drive, refer to Bleeding Hydraulic System.
12. Check the level of the fluid and add fluid, if required. **Do not overfill.**

Replacing the Hydraulic Filter

Service Interval: After the first 8 hours

Every 500 hours/Yearly (whichever comes first)

⚠ WARNING

Hot hydraulic fluid can cause severe burns.

Allow the hydraulic fluid to cool before performing any maintenance to the hydraulic system.

1. Disengage the PTO and set the parking brake.
2. Stop the engine and wait for all moving parts to stop before leaving the operating position.

   Important: Do not substitute automotive oil filter or severe hydraulic system damage may result.

3. Locate the filter and place drain pan under filter (Figure 74).

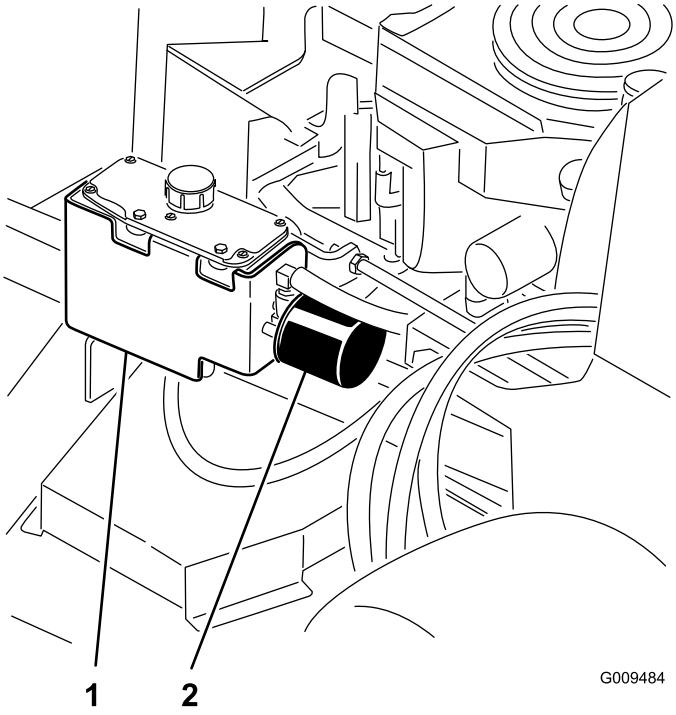

Figure 74

1. Hydraulic tank
2. Hydraulic filter

4. Remove the old filter and wipe the filter adapter gasket surface clean (Figure 75).
5. Apply a thin coat hydraulic fluid to the rubber gasket on the replacement filter.
6. Install replacement hydraulic filter onto the filter adapter. Turn the oil filter clockwise until the rubber gasket contacts the filter adapter, then tighten the filter an additional 1/2 turn (Figure 75).

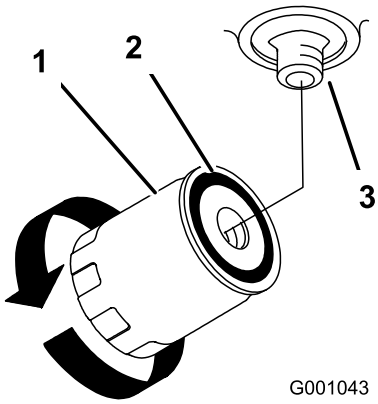

Figure 75

1. Hydraulic filter
2. Gasket
3. Adapter

7. Clean up any spilled fluid.
8. Check the fluid in the reservoir, add fluid to the tank until it reaches the cold baffle of the tank.

   Important: Use oil specified or equivalent. Other fluids could cause system damage.

9. Start engine and let run for about two minutes to purge air from the system. Stop the engine and check for leaks. If one or both wheels will not drive, refer to Bleeding Hydraulic System.
10. Recheck level and add fluid, if required. **Do not overfill.**

Bleeding the Hydraulic System

The traction system is self bleeding, however, it may be necessary to bleed the system if fluid is changed or after work is performed on the system.

1. Disengage the PTO and set the parking brake.
2. Stop the engine and wait for all moving parts to stop before leaving the operating position.
3. Raise the rear of the machine up onto jack stands high enough to raise the drive wheels off the ground.
4. Start the engine and move the throttle control to idle position.

   If the drive wheel does not rotate, it is possible to assist the purging of the system by carefully rotating the tire in the forward direction.

5. Check the hydraulic fluid level as it drops add fluid as required to maintain the proper level.
6. Repeat this procedure for the opposite wheel.
7. Thoroughly clean the area around each of the charge pump housings.

Checking the Hydraulic Lines

Service Interval: Every 100 hours

Check hydraulic hoses and hoses for leaks, loose fittings, kinked hoses, loose mounting supports, wear, weather and chemical deterioration. Make necessary repairs before operating.

Note: Keep areas around hydraulic system clean from grass and debris build up.

⚠ WARNING

Hydraulic fluid escaping under pressure can penetrate skin and cause injury.

- **If hydraulic fluid is injected into the skin it must be surgically removed within a few hours by a doctor familiar with this type of injury. Gangrene may result if this is not done.**
- **Keep body and hands away from pin hole leaks or nozzles that eject high pressure hydraulic fluid.**
- **Use cardboard or paper to find hydraulic leaks.**
- **Safely relieve all pressure in the hydraulic system before performing any work on the hydraulic system.**
- **Make sure all hydraulic fluid hoses and hoses are in good condition and all hydraulic connections and fittings are tight before applying pressure to hydraulic system.**

Mower Deck Maintenance

Servicing the Cutting Blades

To ensure a superior quality of cut, keep the blades sharp. For convenient sharpening and replacement, you may want to keep extra blades on hand.

⚠ WARNING

A worn or damaged blade can break, and a piece of the blade could be thrown into the operator's or bystander's area, resulting in serious personal injury or death.

- **Inspect the blades periodically for wear or damage.**
- **Replace a worn or damaged blade.**

Before Inspecting or Servicing the Blades

Park the machine on a level surface, disengage the blades and set the parking brake. Turn the ignition key to off. Remove the key and disconnect the spark plug wires from the spark plugs.

Inspecting the Blades

Service Interval: Before each use or daily

1. Inspect the cutting edges (Figure 76). If the edges are not sharp or have nicks, remove and sharpen the blades. Refer to Sharpening the Blades.
2. Inspect the blades, especially the curved area. If you notice any cracks, wear, or a slot forming in this area immediately install a new blades (Figure 76).

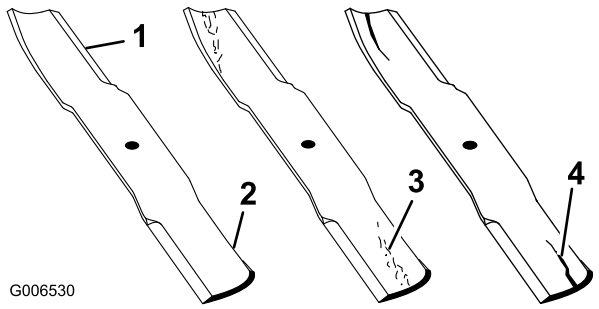

Figure 76

1. Cutting Edge
2. Curved Area
3. Wear/slot Forming
4. Crack

Checking for Bent Blades

1. Disengage the PTO, move the motion control levers to the neutral locked position and set the parking brake.
2. Stop the engine, remove the key, and wait for all moving parts to stop before leaving the operating position.
3. Rotate the blades until the ends face forward and backward. Measure from a level surface to the cutting edge, position **A**, of the blades (Figure 77). Note this dimension.

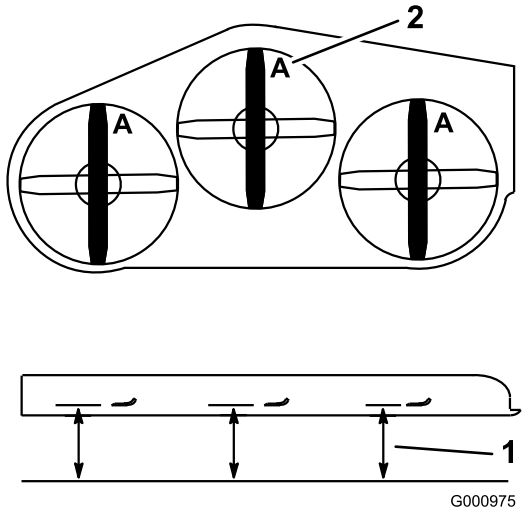

Figure 77

1. Measure here from blade to hard surface
2. Position A

4. Rotate the opposite ends of the blades forward.
5. Measure from a level surface to the cutting edge of the blades at the same position as in step 3 above. The difference between the dimensions obtained in steps 3 and 4 must not exceed 1/8 inch (3 mm). If this dimension exceeds 1/8 inch (3 mm), the blade is bent and must be replaced; refer to Removing the Blades and Installing the Blades.

⚠ WARNING

A blade that is bent or damaged could break apart and could seriously injure or kill you or bystanders.

- **Always replace bent or damaged blade with a new blade.**
- **Never file or create sharp notches in the edges or surfaces of blade.**

Removing the Blades

Blades must be replaced if a solid object is hit, if the blade is out of balance or is bent. To ensure optimum performance and continued safety conformance of the machine, use genuine Toro replacement blades. Replacement blades made by other manufacturers may result in non-conformance with safety standards.

1. Hold the blade end using a rag or thickly-padded glove.
2. Remove the blade bolt, curved washer, and blade from the spindle shaft (Figure 78).

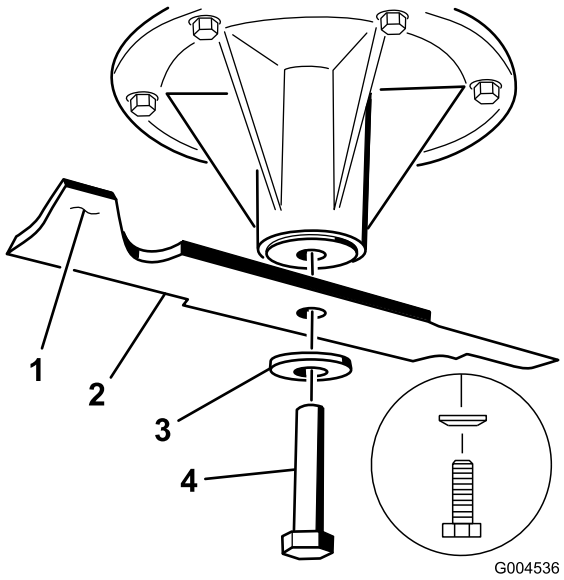

Figure 78

1. Sail Area of Blade
2. Blade
3. Curved washer
4. Blade Bolt

Sharpening the Blades

1. Use a file to sharpen the cutting edge at both ends of the blade (Figure 79). Maintain the original angle. The blade retains its balance if the same amount of material is removed from both cutting edges.

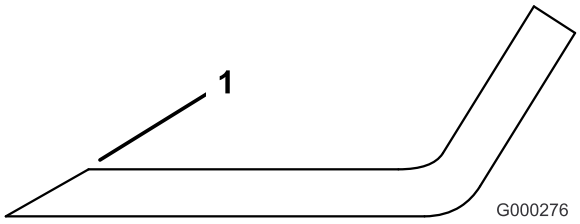

Figure 79

1. Sharpen at original angle

2. Check the balance of the blade by putting it on a blade balancer (Figure 80). If the blade stays in a horizontal position, the blade is balanced and can be used. If the blade is not balanced, file some metal off the end of the sail area only (Figure 78). Repeat this procedure until the blade is balanced.

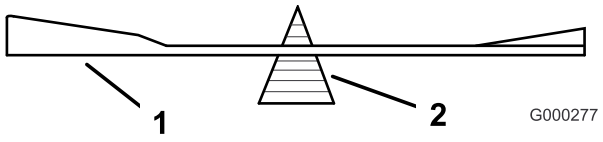

Figure 80

1. Blade
2. Balancer

Installing the Blades

1. Install the blade onto the spindle shaft (Figure 81).

   Important: The curved part of the blade must be pointing upward toward the inside of the mower to ensure proper cutting.

2. Install the spring disk and blade bolt. The spring disk cone must be installed toward the bolt head (Figure 81). Torque the blade bolt to 85-110 ft-lb (115-150 N-m).

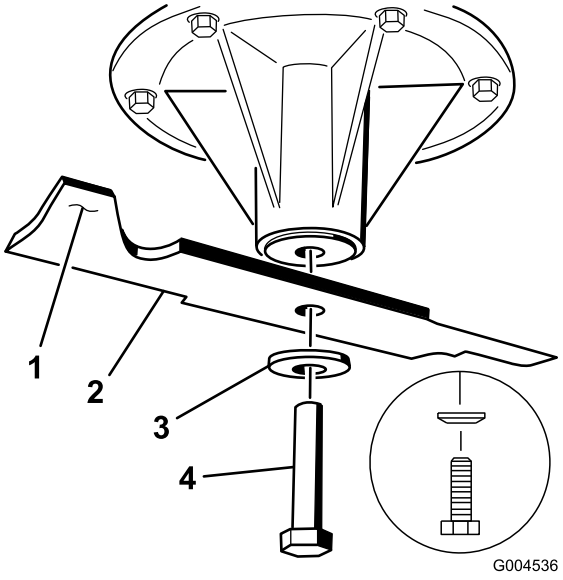

Figure 81

1. Sail Area of Blade
2. Blade
3. Spring Disk
4. Blade Bolt
5. Cone Towards Bolt Head

Correcting the Mower Quality of Cut

If one deck blade cuts lower than the other, correct as follows.

Note: Tire air pressure is critical in these procedures. Make sure the rear tires have correct pressure.

1. Disengage the PTO and set the parking brake.
2. Stop the engine, remove the key, and wait for all moving parts to stop before leaving the operating position. Disconnect the spark plug wire(s) from the spark plug(s).
3. Adjust the tire pressure in the rear tires to 12-14 psi (83-97 kPa).
4. Check that the blades and spindle shafts are not bent. Refer to Checking for Bent Blades.
5. Set the height-of-cut to the 3 inch (7.6 cm) position. Refer to Adjusting the Height-Of-Cut in Operation.
6. Perform the steps in the following procedures in order.

Checking the Mower Deck Side-to-Side Height

1. Adjust the rear tire pressure.
2. Ensure the blades are not bent. Refer to Checking for Bent Blades.
3. Position the blades side-to-side. Measure at **B** and **C** locations from a level surface to the cutting edge of blade tips (Figure 82).

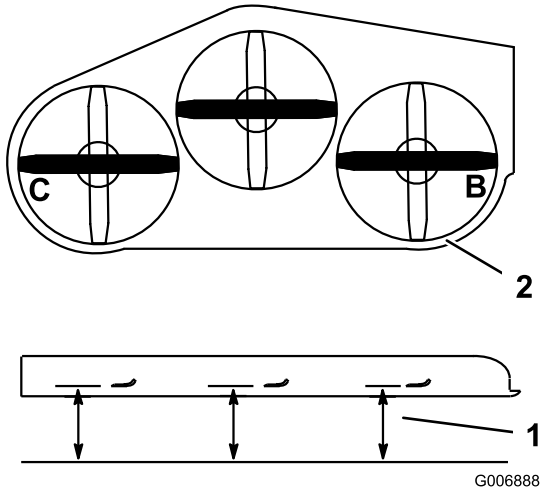

Figure 82

1. Measure from a level surface
2. Measure blade at points **B** and **C**

4. The difference between measurements **B** and **C** should be no more than 1/4 inch (6 mm). I If it is not correct, proceed to Changing the Mower Deck Side-to-Side Height.

Changing the Mower Deck Side-to-Side Height

Changing the side-to-side height is done by adjusting the rear tire pressure and U-plates on the side of the engine deck.

1. Change the rear tire pressure. Do this to the corresponding side that needs adjustment.
2. Locate the U-plates on the side of the engine deck (Figure 83).
3. Loosen the U-plate on one side and adjust it up or down to make the difference between measurements **B** and **C** no more than a 1/4 inch (6 mm) (Figure 83).
4. Proceed to Checking the Mower Deck Front-to-Rear Pitch.

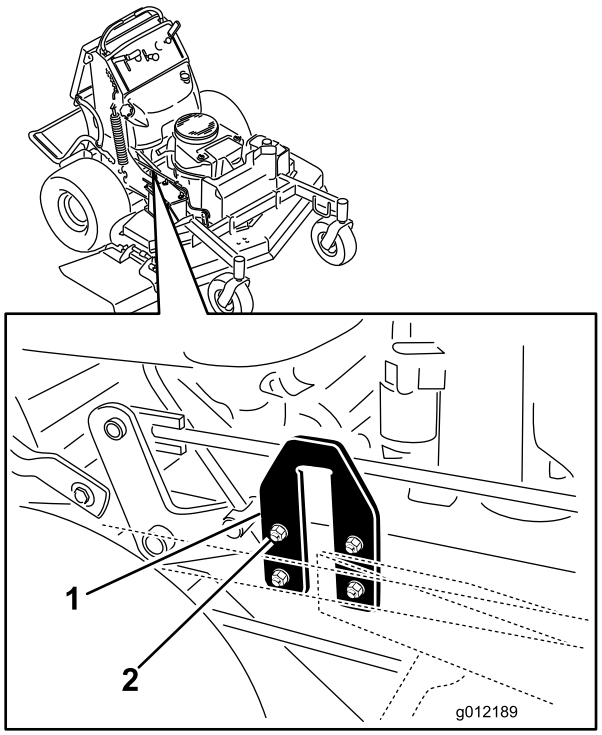

Figure 83

1. U-plate
2. Nuts and bolts

Checking the Mower Deck Front-to-Rear Pitch

1. Adjust the tire pressure in the rear tires to specifications.
2. Position one blade front-to-rear. Measure at **A** and **B** locations from a level surface to the cutting edge of the blade tips (Figure 84).
3. The mower blade should be a 1/4 inch (6 mm) lower in front at **A** than in the rear at **B**. Rotate blades and repeat for other blades. If it is not correct, proceed to Changing the Deck Front-to-Rear Pitch.

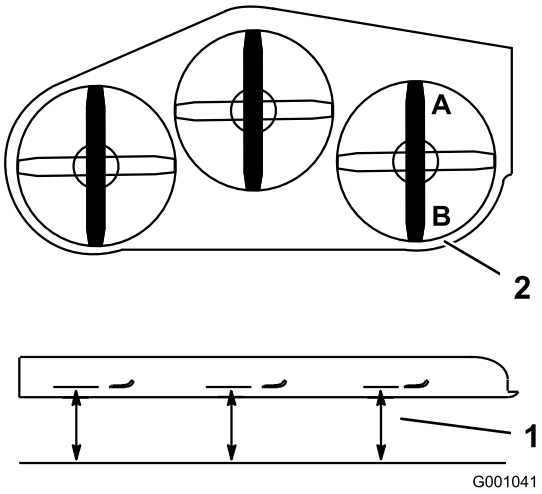

Figure 84

1. Measure blade at points **A** and **B**
2. Measure from a level surface

Changing the Mower Deck Front-to-Rear Pitch

Changing the front-to-rear pitch is done by adjusting the front height-of-cut posts.

1. Place 3 pieces of 2x4 wood under the mower deck as shown in Figure 85. Stand the 2x4's on the 4 inch part.

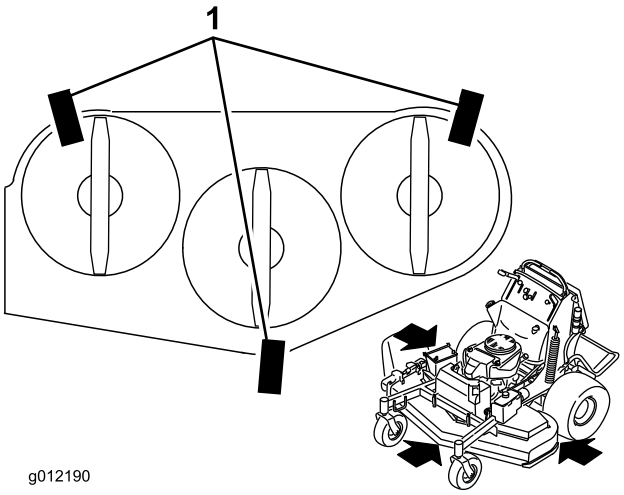

Figure 85

1. 2x4 piece of wood under mower deck

2. Loosen both the front and rear nuts on the adjustment rods (Figure 86).
3. The weight of the mower deck must be resting on all three of the 2x4's (Figure 86). The back lip of the mower deck is built a 1/4 inch (6mm) lower than the front lip of the mower deck.
4. Tighten both the front and rear nuts.

5. Check the front-to-rear pitch of the cutting unit.
6. If the dimensions are not correct, adjust the front and rear nuts on either side to get the correct front-to-rear pitch (Figure 86).

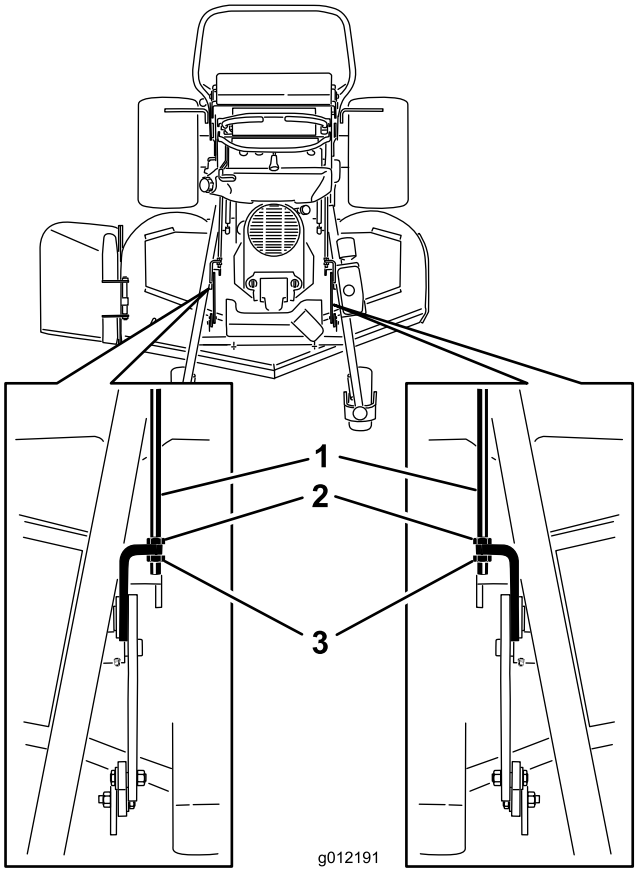

Figure 86

1. Adjustment rods
2. Rear nuts
3. Front nuts

Matching Height of Cut

1. Check the rear tire pressure.
2. Set the height-of-cut to the 3 inch (7.6 cm) position. Refer to Adjusting the Height-Of-Cut in Operation.
3. With the machine on level surface, position one blade front-to-rear. Measure at **A** and from level surface to the cutting edge of the blade tips (Figure 87).

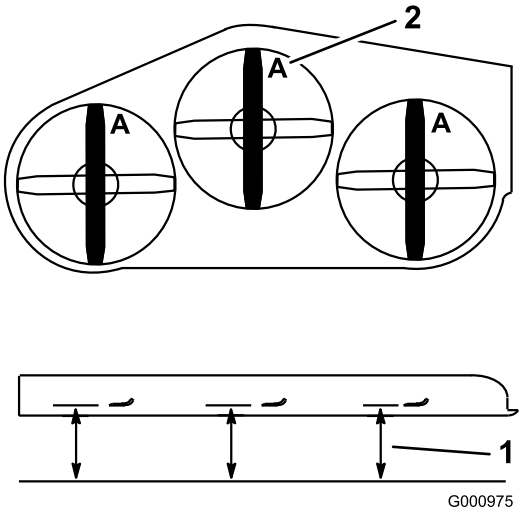

Figure 87

1. Measure from a level surface
2. Measure blade at point **A**

4. The measurement should be 3 inch (7.6 cm).
5. If it does not measure correctly, locate the height-of-cut rod on the right side of the machine (Figure 88).
6. Adjust the adjustment bolt until the blade tips match 3 inches (7.6 cm) (Figure 88).

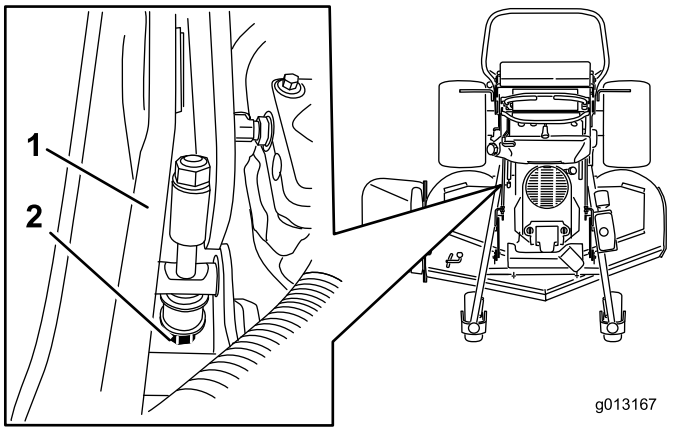

Figure 88

1. Height-of-cut rod
2. Adjustment bolt

Replacing the Grass Deflector

⚠ WARNING

An uncovered discharge opening could allow the lawn mower to throw objects in the operator's or bystander's direction and result in serious injury. Also, contact with the blade could occur.

Never operate the lawn mower unless you install a cover plate, a mulch plate, grass deflector or bagger.

1. Remove the locknut, bolt, spring and spacer holding the deflector to the pivot brackets (Figure 89). Remove damaged or worn grass deflector.

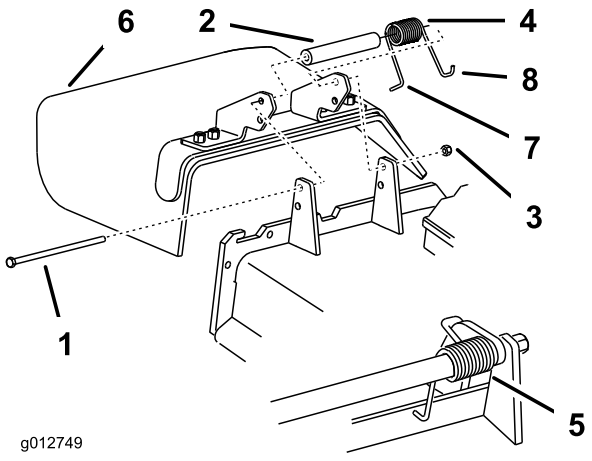

Figure 89

1. Bolt
2. Spacer
3. Locknut
4. Spring
5. Spring installed
6. Grass Deflector
7. L end of spring, place behind deck edge before installing bolt
8. J hook end of spring

2. Place spacer and spring onto grass deflector. Place the **L** end of spring behind deck edge.

   Note: Make sure the **L** end of spring is installed behind deck edge before installing the bolt as shown in Figure 89.

3. Install bolt and nut. Place the **J** hook end of spring around grass deflector (Figure 89).

   Important: The grass deflector must be able to rotate. Lift the deflector up to the full open position and ensure that it rotates into the full down position.

Cleaning

Cleaning Under the Mower

Service Interval: Before each use or daily

Remove the grass buildup under the mower daily.

1. Disengage the PTO, move the motion control levers to the neutral locked position and set the parking brake.
2. Stop the engine, remove the key, and wait for all moving parts to stop before leaving the operating position.
3. Raise the front of the machine and use jack stands to support the mower.

Waste Disposal

Engine oil, batteries, hydraulic oil, and engine coolant are pollutants to the environment. Dispose of these according to your state and local regulations.

Storage

Cleaning and Storage

1. Disengage the power take off (PTO), set the parking brake, and turn the ignition key to off. Remove the key.
2. Remove grass clippings, dirt, and grime from the external parts of the entire machine, especially the engine. Clean dirt and chaff from the outside of the engine's cylinder head fins and blower housing.

   Important: You can wash the machine with mild detergent and water. Do not pressure wash the machine. Avoid excessive use of water, especially near the drive system and engine. Pressure washing can force dirt and water into critical parts, such as spindle bearings and electrical switches.
3. Check the brake; refer to Servicing the Brake in Brake Maintenance (page 45).
4. Service the air cleaner; refer to Servicing the Air Cleaner in Engine Maintenance (page 32).
5. Grease the machine; refer to Greasing and Lubrication in Lubrication (page 30).
6. Change the engine oil; refer to Servicing the Engine in Engine Maintenance (page 32).
7. Check the tire pressure; refer to Checking the Tire Pressure in Drive System Maintenance (page 41).
8. For long-term storage:
   A. Add stabilizer/conditioner additive to fuel in the tank.
   B. Run engine to distribute conditioned fuel through the fuel system (5 minutes).
   C. Stop engine, allow to cool and drain the fuel tank; refer to Servicing the Fuel Tank in Fuel System Maintenance (page 38), or operate engine until it stops.
   D. Restart engine and run until it stops. Repeat, on Choke until engine will not restart.
   E. Dispose of fuel properly. Recycle as per local codes.

   Note: Do not store stabilizer/conditioned gasoline over 90 days.
9. Remove the spark plug(s) and check its condition; refer to Servicing the Spark Plug in Engine Maintenance (page 32). With the spark plug(s) removed from the engine, pour two tablespoons of engine oil into the spark plug hole. Now use the starter to crank the engine and distribute the oil inside the cylinder. Install the spark plug(s). Do not install the wire on the spark plug(s).
10. Check and tighten all bolts, nuts, and screws. Repair or replace any part that is damaged or defective.
11. Paint all scratched or bare metal surfaces. Paint is available from your Authorized Service Dealer.
12. Store the machine in a clean, dry garage or storage area. Remove the key from the ignition switch and keep it in a memorable place. Cover the machine to protect it and keep it clean.

Troubleshooting

Problem	Possible Cause	Corrective Action
Engine will not start, starts hard, or fails to keep running.	1. Fuel tank is empty or shut-off valve closed. 2. Choke is not on. 3. Spark plug wire is loose or disconnected. 4. Spark plug is pitted, fouled, or the gap is incorrect. 5. Air cleaner is dirty. 6. Dirt in the fuel filter. 7. Dirt, water, or stale fuel is in the fuel system. 8. The gap between the safety interlock switches is not correct.	1. Fill fuel tank with gasoline and open valve 2. Move the choke lever to choke position. 3. Install wire on spark plug. 4. Install a new, correctly gapped spark plug. 5. Service the air cleaner element. 6. Replace the fuel filter. 7. Contact an Authorized Service Dealer. 8. Contact an Authorized Service Dealer.
Engine loses power.	1. Engine load is excessive. 2. Air cleaner is dirty. 3. Oil level in the crankcase is low. 4. Cooling fins and air passages under the engine blower housing are plugged. 5. Spark plug is pitted, fouled, or the gap is incorrect. 6. Vent hole in the fuel cap is plugged. 7. Dirt in the fuel filter. 8. Dirt, water, or stale fuel is in the fuel system.	1. Reduce the ground speed. 2. Service the air cleaner. 3. Add oil to the crankcase. 4. Remove the obstruction from the cooling fins and air passages. 5. Install a new, correctly gapped spark plug. 6. Clean or replace the fuel cap. 7. Replace the fuel filter. 8. Contact an Authorized Service Dealer.
Engine overheats.	1. Engine load is excessive. 2. Oil level in the crankcase is low. 3. Cooling fins and air passages under the engine blower housing are plugged.	1. Reduce the ground speed. 2. Add oil to the crankcase. 3. Remove the obstruction from the cooling fins and air passages.
Machine does not drive.	1. Hydraulic oil reservoir low. 2. Air in the hydraulic system. 3. Pump drive belt slipping. 4. Pump drive belt idler spring missing. 5. Pump by-pass valves are open.	1. Add hydraulic oil to the reservoir. 2. Bleed the air out the hydraulic system. 3. Replace the pump drive belt. 4. Replace the pump drive belt idler spring. 5. Tighten the by-pass valves.
Abnormal vibration.	1. Cutting blade(s) is/are bent or unbalanced. 2. Blade mounting bolt is loose. 3. Engine mounting bolts are loose. 4. Loose engine pulley, idler pulley, or blade pulley. 5. Engine pulley is damaged. 6. Blade spindle is bent.	1. Install new cutting blade(s). 2. Tighten the blade mounting bolt. 3. Tighten the engine mounting bolts. 4. Tighten the appropriate pulley. 5. Contact an Authorized Service Dealer. 6. Contact an Authorized Service Dealer.
Uneven cutting height.	1. Blade(s) not sharp. 2. Cutting blade(s) is/are bent. 3. Mower deck is not level. 4. Mower deck pitch is wrong. 5. Underside of mower deck is dirty. 6. Tire pressure is not correct. 7. Blade spindle bent.	1. Sharpen the blade(s). 2. Install new cutting blade(s). 3. Level the mower deck side-to-side position. 4. Adjust the front-to-rear pitch. 5. Clean the underside of the mower deck. 6. Adjust the tire pressure. 7. Contact an Authorized Service Dealer.

Problem	Possible Cause	Corrective Action
Blades do not rotate.	1. Pump drive belt is worn, loose or broken.	1. Check the belt tension.
	2. Pump drive belt is off pulley.	2. Install drive belt and check adjusting shafts and belt guides for correct position.
	3. Mower deck belt is worn, loose or broken.	3. Install new deck belt.
	4. Mower deck belt is off pulley.	4. Install deck pulley and check the idler pulley, idler arm and spring for correct position and function.
	5. Broken or missing idler spring.	5. Replace the spring.
	6. Electric clutch out of adjustment.	6. Adjust the clutch air gap.
	7. Clutch connector or wire damaged.	7. Contact an Authorized Service Dealer.
	8. Damaged electric clutch.	8. Contact an Authorized Service Dealer.
	9. Safety interlock system prevents blade rotation.	9. Contact an Authorized Service Dealer.
	10. PTO switch is faulty.	10. Contact an Authorized Service Dealer.

Schematics

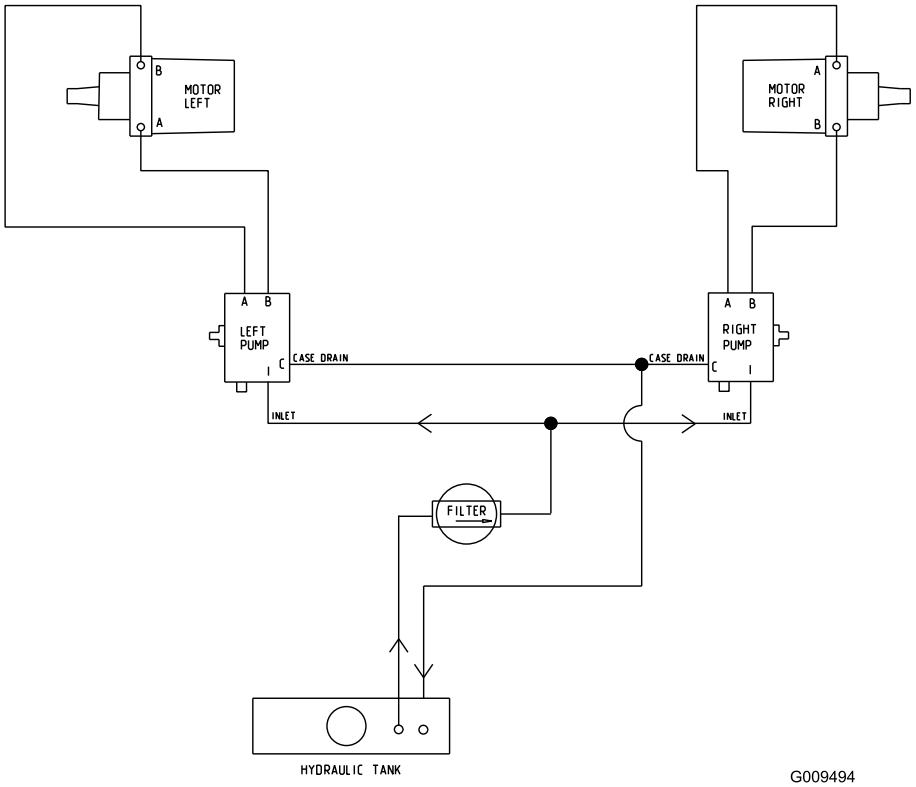

Hydraulic Schematic (Rev. A)

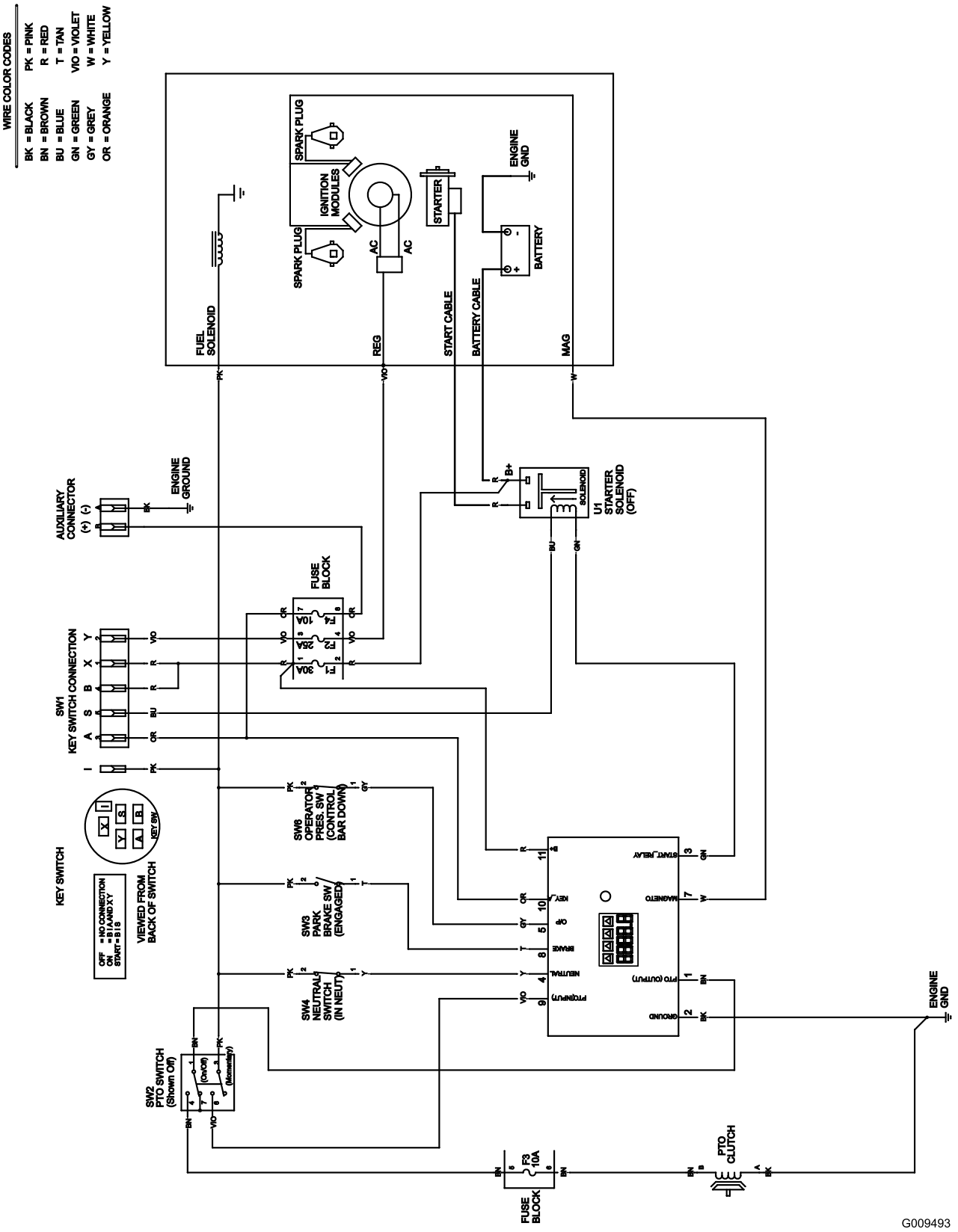

Electrical Schematic (Rev. A)

The Toro Total Coverage Warranty

A Limited Warranty (see warranty periods below)

Landscape Contractor Equipment (LCE)

Conditions and Products Covered

The Toro Company and its affiliate, Toro Warranty Company, pursuant to an agreement between them, jointly promise to the original purchaser to repair the Toro Products listed below if defective in materials or workmanship.

The following time periods apply from the date of purchase by the original owner:

Products	Warranty Period
All Mowers	
• Engine**	2 years
• Battery	1 year
• Attachments	1 year
Mid-Size Walk-Behind Mowers	2 years
Grand Stand™ Mowers	5 years or 1,200 hours*
• Frame	Lifetime (original owner only)***
Z Master® Z400, Z500 Mowers	4 years or 1,200 hours*
• Engine	2 years**
• Frame	Lifetime (original owner only)***
Z Master® G3 Mowers	5 years or 1,200 hours*
• Frame	Lifetime (original owner only)***

*Whichever occurs first.

**Some engines used on Toro LCE Products are warranted by the engine manufacturer. Kawasaki FX engines have a 3 year warranty term for residential use. Residential use means use of the product on the same lot as your home.

***Lifetime Frame Warranty - If the main frame, consisting of the parts welded together to form the tractor structure that other components such as the engine are secured to, cracks or breaks in normal use, it will be repaired or replaced, at Toro's option, under warranty at no cost for parts and labor. Frame failure due to misuse or abuse and failure or repair required due to rust or corrosion are not covered.

This warranty includes the cost of parts and labor, but you must pay transportation costs.

Instructions for Obtaining Warranty Service

If you think that your Toro Product contains a defect in materials or workmanship, follow this procedure:

1. Contact any Authorized Toro Service Dealer to arrange service at their dealership. To locate a dealer convenient to you, refer to the Yellow Pages of your telephone directory (look under "Lawn Mowers") or access our web site at www.Toro.com. You may also call the numbers listed in item #3 to use the 24-hour Toro Dealer locator system.
2. Bring the product and your proof of purchase (sales receipt) to the Service Dealer. The dealer will diagnose the problem and determine if it is covered under warranty.
3. If for any reason you are dissatisfied with the Service Dealer's analysis or with the assistance provided, contact us at:

   RLC Customer Care Department
   Toro Warranty Company
   8111 Lyndale Avenue South
   Bloomington, MN 55420-1196
   888-865-5676 (U.S. Customers)
   888-865-5691 (Canada customers)

Owner Responsibilities

You must maintain your Toro Product by following the maintenance procedures described in the *Operator's Manual*. Such routine maintenance, whether performed by a dealer or by you, is at your expense.

Items and Conditions Not Covered

There is no other express warranty except for special emission system and engine warranty coverage on some products. This express warranty does not cover the following:

- Cost of regular maintenance service or wear parts, such as filters, fuel, lubricants, tune-up parts, blade sharpening, brake and clutch adjustments.
- Any product or part which has been altered or misused and requires replacement or repair due to normal wear, accidents, or lack of proper maintenance.
- Repairs necessary due to improper fuel, contaminants in the fuel system, or failure to properly prepare the fuel system prior to any period of non-use over three months.
- Pickup and delivery charges.

General Conditions

All repairs covered by these warranties must be performed by an Authorized Toro Service Dealer using Toro approved replacement parts.

Neither The Toro Company nor Toro Warranty Company is liable for indirect, incidental or consequential damages in connection with the use of the Toro Products covered by this warranty, including any cost or expense of providing substitute equipment or service during reasonable periods of malfunction or non-use pending completion of repairs under this warranty.

All implied warranties of merchantability (that the product is fit for ordinary use) and fitness for use (that the product is fit for a particular purpose) are limited to the duration of the express warranty

Some states do not allow exclusions of incidental or consequential damages, or limitations on how long an implied warranty lasts, so the above exclusions and limitations may not apply to you.

This warranty gives you specific legal rights, and you may also have other rights which vary from state to state.

Countries Other than the United States or Canada

Customers who have purchased Toro products outside the United States or Canada should contact their Toro Distributor (Dealer) to obtain guarantee policies for your country, province, or state. If for any reason you are dissatisfied with your Distributor's service or have difficulty obtaining guarantee information, contact the Toro importer. If all other remedies fail, you may contact us at Toro Warranty Company.