FORM NO. 3318–332

TORO®

Proline

52” Recycler Cutting Unit

Model No. 30154 – 690001 & Up

Parts Catalog

ORDERING REPLACEMENT PARTS

To order replacement parts, please supply: the part number, the quantity, and the description of each part desired.

Contents

Description	Page
Deck And Spindles	1
Cover's And Belts	2
Baffles And Kicker's	3
Carrier Frame	4
Decals	5

Note:

Accessories

Description	Model / Parts No.	Description	Model / Parts No.

. .

Part Description Abbreviations

Part descriptions in this catalog may include the following abbreviations.

Abbreviation	Meaning
AR	as required
ASM	assembly
CARR	carriage
DEG	degrees
FH	flat head
GA	gauge
HF	hex flange
HFW	hex flange washer
HH	hex head
HHF	hex head flange
HHST	hex head self tapping
HJ	hex jam
HOC	height-of-cut
HS	hex socket
HSBH	hex socket button head
HSFH	hex socket flat head
HSH	hex socket head
HWH	hex washer head
HWHTF	hex washer head thread forming
INC	incorporated
LH	left hand
PH	pan head
PPH	Phillips pan head
PTO	power take off
RH	right hand
SFH	slotted fillister head
SH	square head
SHWH	slotted hex washer head
SPH	slotted pan head
STD	standard
TAP	self tapping
TH	truss head
TTH	Torx truss head
WH	wing head

Important Format Explanations

This catalog uses special formats to convey information in illustrations and parts lists. Specifically, one format is used in conjunction with service assemblies and another with quantities associated with reference numbers.

Service Assemblies

Parts within service assemblies have reference numbers in the form *X:Y. X* is the reference number of the service assembly and *Y* is a sequential number unique to each part within the service assembly.

© The TORO Company — 1996
All Rights Reserved

For example, a wheel assembly might be identified by reference number 6, the tire by 6:1, the valve by 6:2, and the wheel by 6:3. When you order the assembly identified by reference number 6, you receive all parts identified by reference numbers 6:1, 6:2, and 6:3. However, you may also order any part individually.

Reference numbers of this type appear in part lists and as callouts in illustrations.

Reference Numbers with Quantities

Illustrations may have a quantity in parentheses next to a reference number, in the form *X (Y). X* is the reference number. *Y* in parentheses is the quantity of the part identified by the reference number.

For example, the illustration callout 4 (2) indicates that two parts are used in that instance.

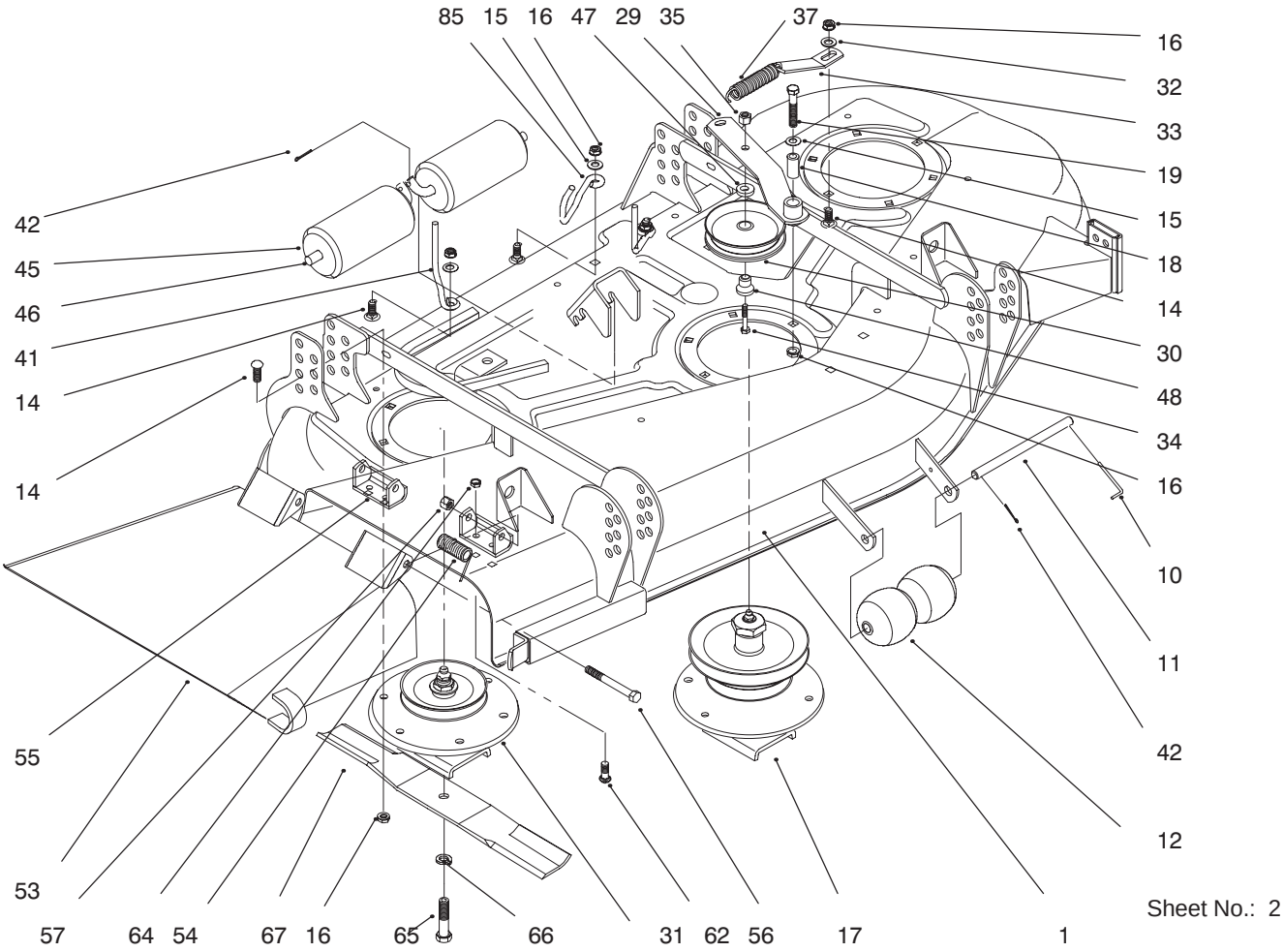

Sheet No.: 2

Deck And Spindles

Ref. No.	Part No.	Qty.	Description
1	94–6781–01	1	Deck
10	57–0690	1	Pin–Cotter
11	40–6400	1	Shaft–Roller
12	29–4820	2	Roller
14	3231–22	20	Bolt–CARR
15	3256–24	4	Washer–Flat
16	32128–21	21	Nut–HF
17	54–7781	1	ASM–Housing
18	51–3640	1	Sleeve–Pivot
19	323–11	1	Screw
29	55–7640–03	1	Arm
30	65–5940	1	Pulley–Idler
31	27–0870	2	Spindle Housing ASM
32	3256–24	1	Washer–Flat
33	55–7650	1	Plate–Spring
34	3211–8	1	Screw HH
35	3296–5	1	Nut–Lock
37	51–3650–03	1	Spring–Idler
41	52–4780	2	Rod–Belt
42	3272–11	3	Pin–Cotter
45	36–1740	2	Roller–Deck
46	40–0340	2	Shaft–Roller
47	7–0081	1	Washer–Special
48	65–5950	1	Bushing–Pulley
53	40–6200	1	Deflector
54	40–6230	2	Spring–Torsion

Ref. No.	Part No.	Qty.	Description

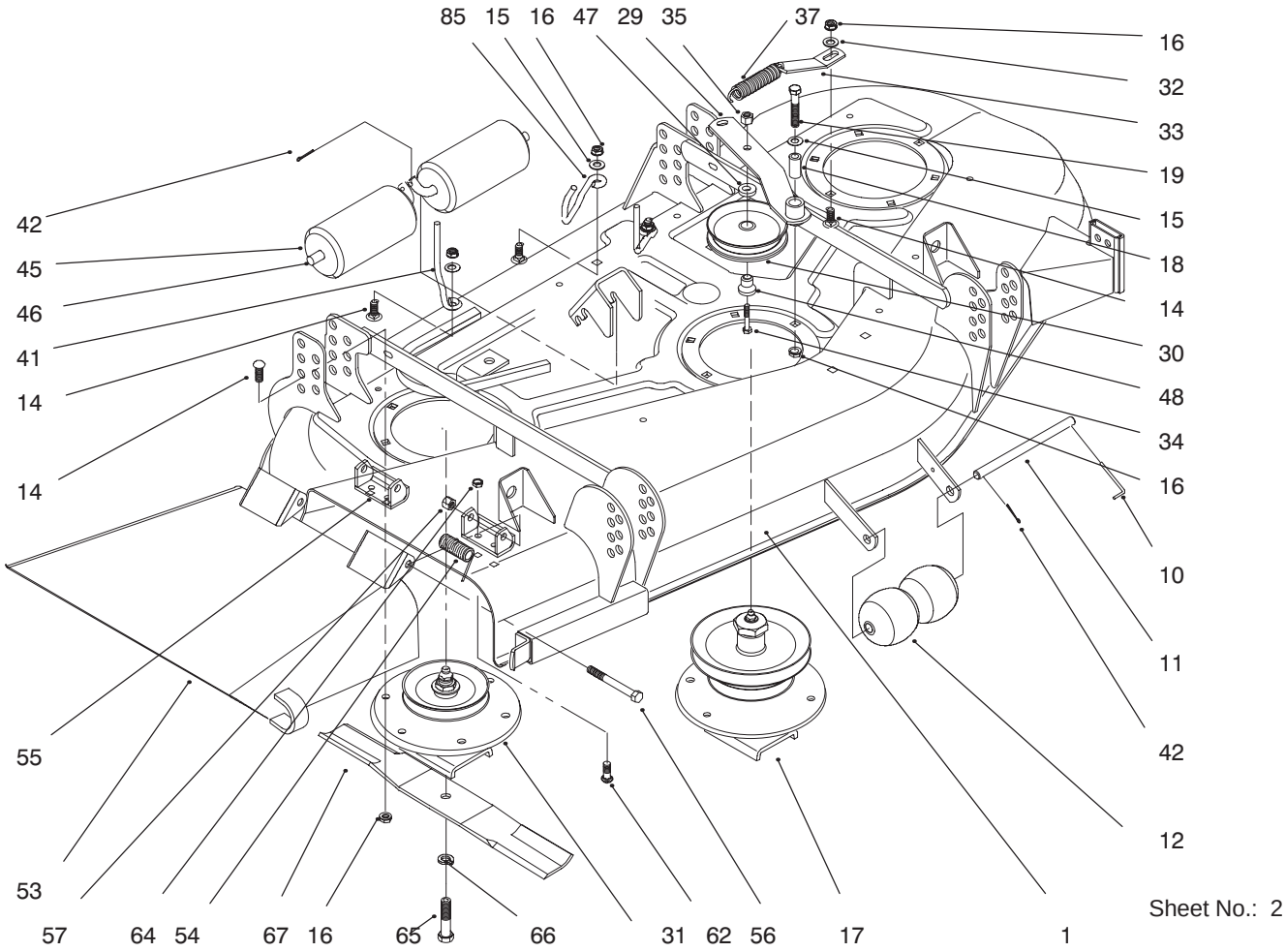

Sheet No.: 2

Deck And Spindles

Ref. No.	Part No.	Qty.	Description
55	29–5590–03	2	Bracket–Pivot
56	3211–15	2	Screw–Cap
57	3296–5	2	Nut–Lock
62	3230–18	4	Screw–CARR
64	32152–1	4	Nut–Lock
65	44–2200	3	Bolt–Blade
66	3253–27	3	Washer–Lock
67	92–7961	3	Blade–Recycler
85	55–7620	1	Guide–Belt

Ref. No.	Part No.	Qty.	Description

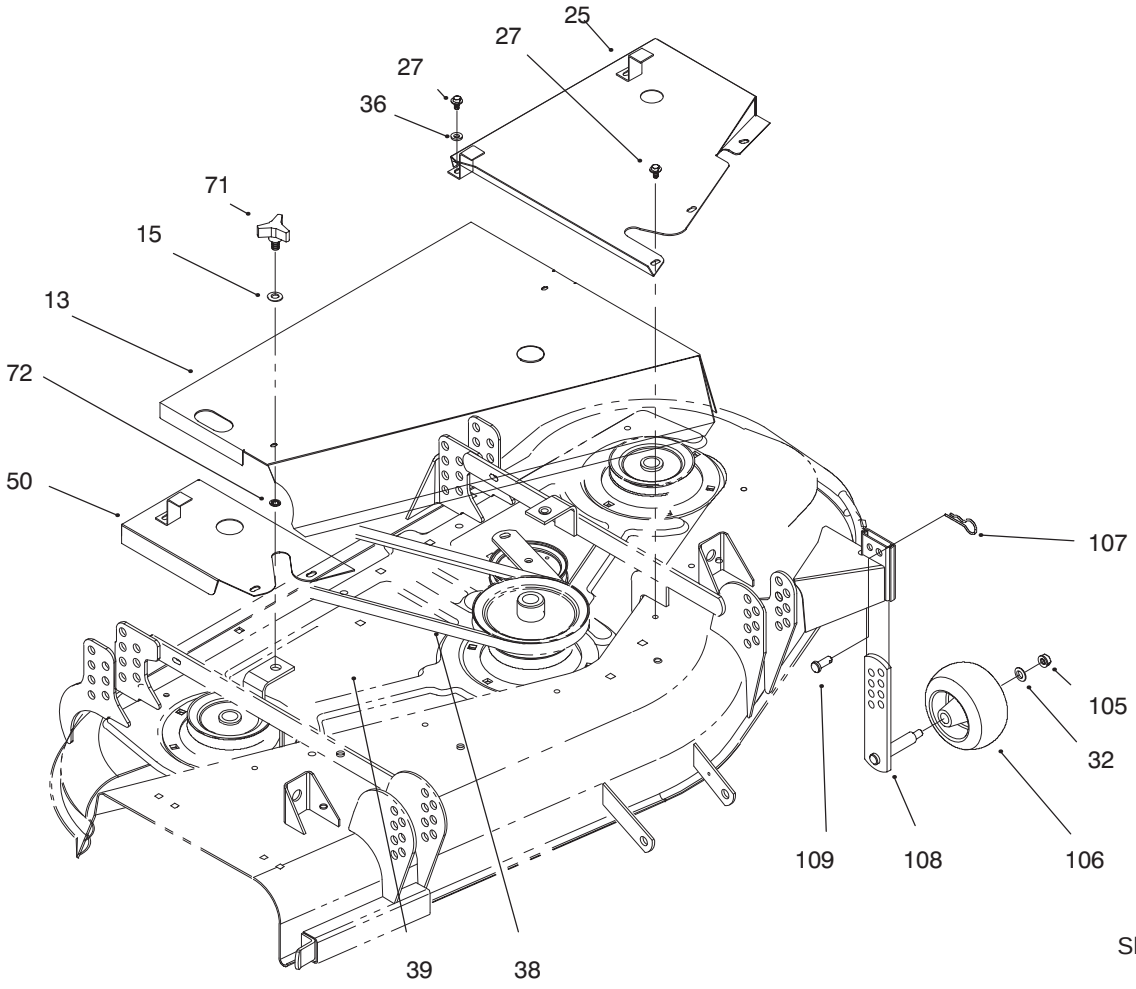

Sheet No.: 3

Cover’s And Belts

Ref. No.	Part No.	Qty.	Description
13	82–5410	1	Cover
15	3256–24	2	Washer–Flat
25	51–3910	1	Cover
27	46–8560	7	Screw–Hfh
32	3256–24	1	Washer–Flat
36	3256–22	1	Washer–Flat
38	55–7660	1	”v” Belt–Drive
39	27–1160	1	Belt–Deck Drive
50	51–3890	1	Cover
71	62–6520	2	Knob
72	32151–72	2	Ring–Retaining
105	3296–39	1	Nut–Lock
106	68–2730	1	Wheel–Gage
107	3290–467	1	Pin–Cotter
108	68–2350	1	Plate Gage Wheel
109	283–2	1	Pin–Clevis

Ref. No.	Part No.	Qty.	Description

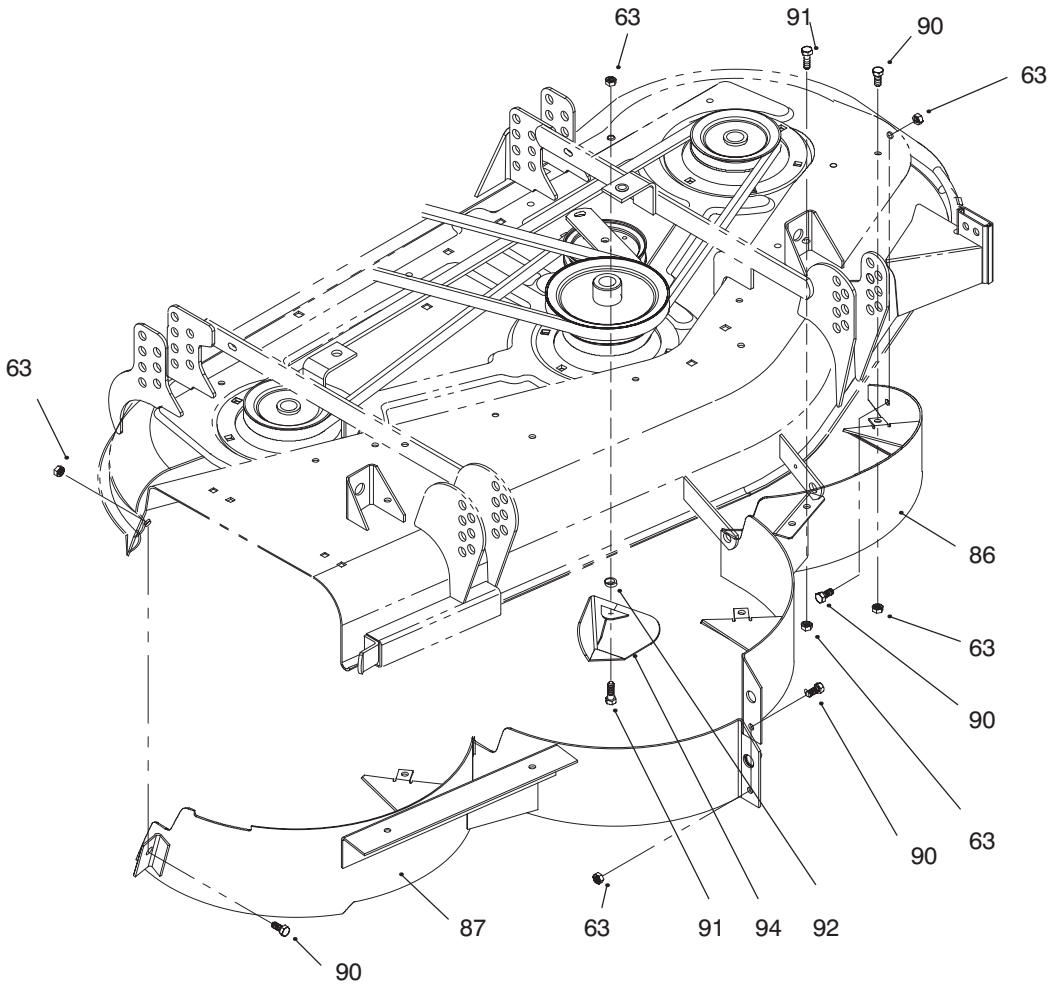

Sheet No.: 4

Baffles And Kicker's

Ref. No.	Part No.	Qty.	Description
63	3296–29	12	Nut–Lock
86	94–2505–03	1	Baffle–Left
87	94–2504–03	1	Baffle–Right
90	322–2	8	Screw–HH
91	322–5	4	Screw–HH
92	59–4310	3	Spacer
94	84–5760	3	Plate–Kicker

Ref. No.	Part No.	Qty.	Description

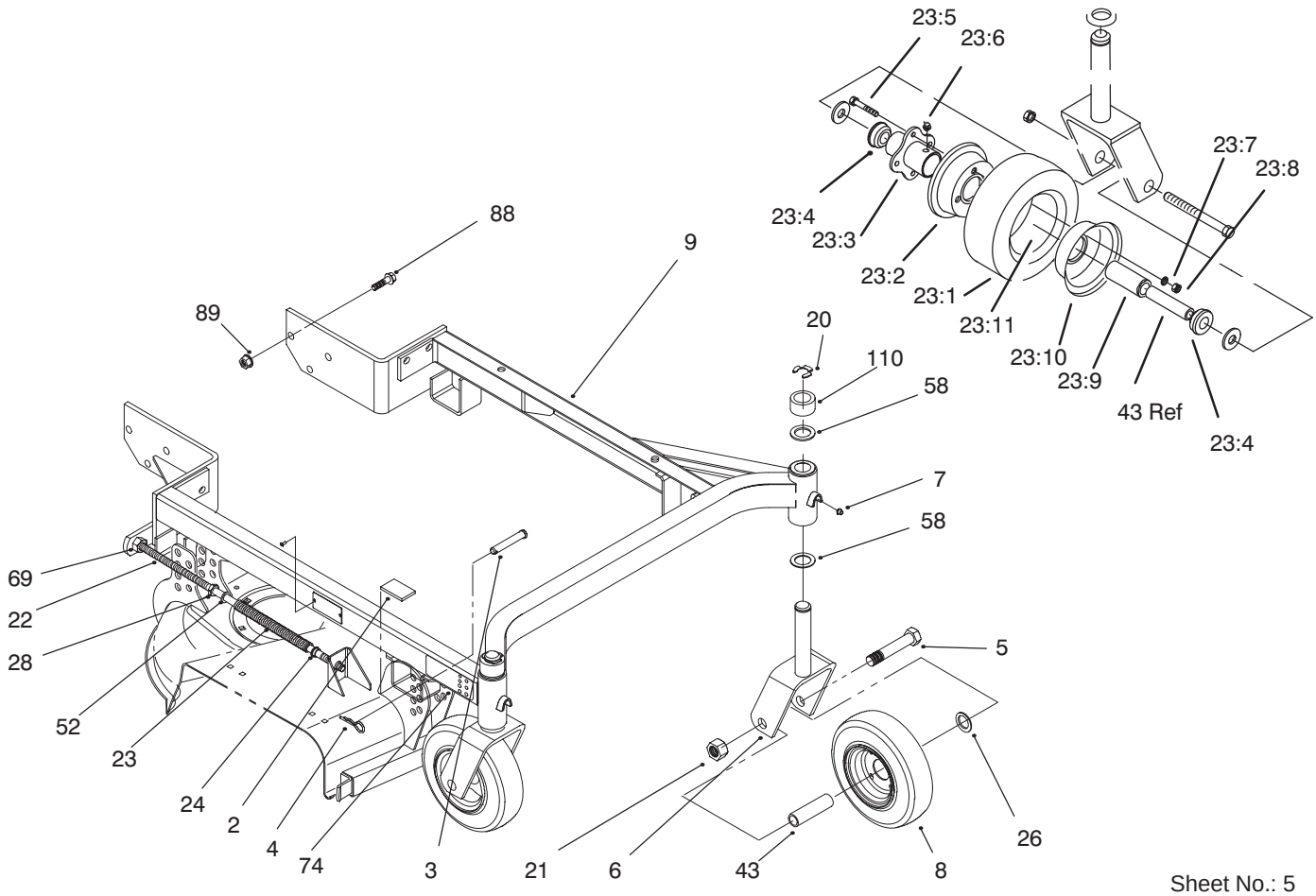

Sheet No.: 5

Carrier Frame

Ref. No.	Part No.	Qty.	Description
2	74–0350	4	Cushion–Rubber
3	283–55	4	Pin–Clevis
4	3290–355	4	Pin–Hair
5	325–19	2	Screw–HH
6	74–0251	2	Fork
7	302–5	2	Fitting–Grease
8:1	68–9840	2	Wheel And Hub ASM
8:2	62–5580	4	Bearing–Outside
8:3	62–5570	2	Roller Bearing
8:1	68–8960	2	Tire
8:2	68–8920	2	Wheel Half – Female
8:3	68–8940	2	Hub – Centered
8:4	62–5580	4	Bushing
8:5	54–8890	8	Bolt – Wheel
8:6	302–61	2	Fitting – Grease
8:7	3253–4	4	Washer Lock
8:8	3219–2	4	Nut
8:9	68–8980	2	Spanner
8:10	68–8930	2	Wheel Half – Male
8:11	68–8950	2	Tube w/Valve
9	94–4185	1	52” Carrier Frame
20	32151–91	2	Ring–Retaining
21	32153–5	2	Nut–Lock
22	74–0310	2	Shaft–Adjusting
23	74–0290	2	Spring–Compression
24	256–156	2	Bushing–Flange

Ref. No.	Part No.	Qty.	Description
26	3256–6	4	Washer–Flt
28	3218–5	4	Nut–Jam
43	68–8980	2	Bushing–Spanner
52	41–8440	2	Spacer–Hardened
58	3–6781	8	Washer–Thrust
59	3290–271	2	Rivet–Pop
60	42–6482	1	Plate–Serial
69	3296–45	2	Nut–
74	85–7460	1	Decal–HOC
77	85–7450	1	Decal–HOC
88	3234–6	6	Screw–Flange
89	32128–23	6	Nut–Lock
110	93–1167	2	Spacer–Castor

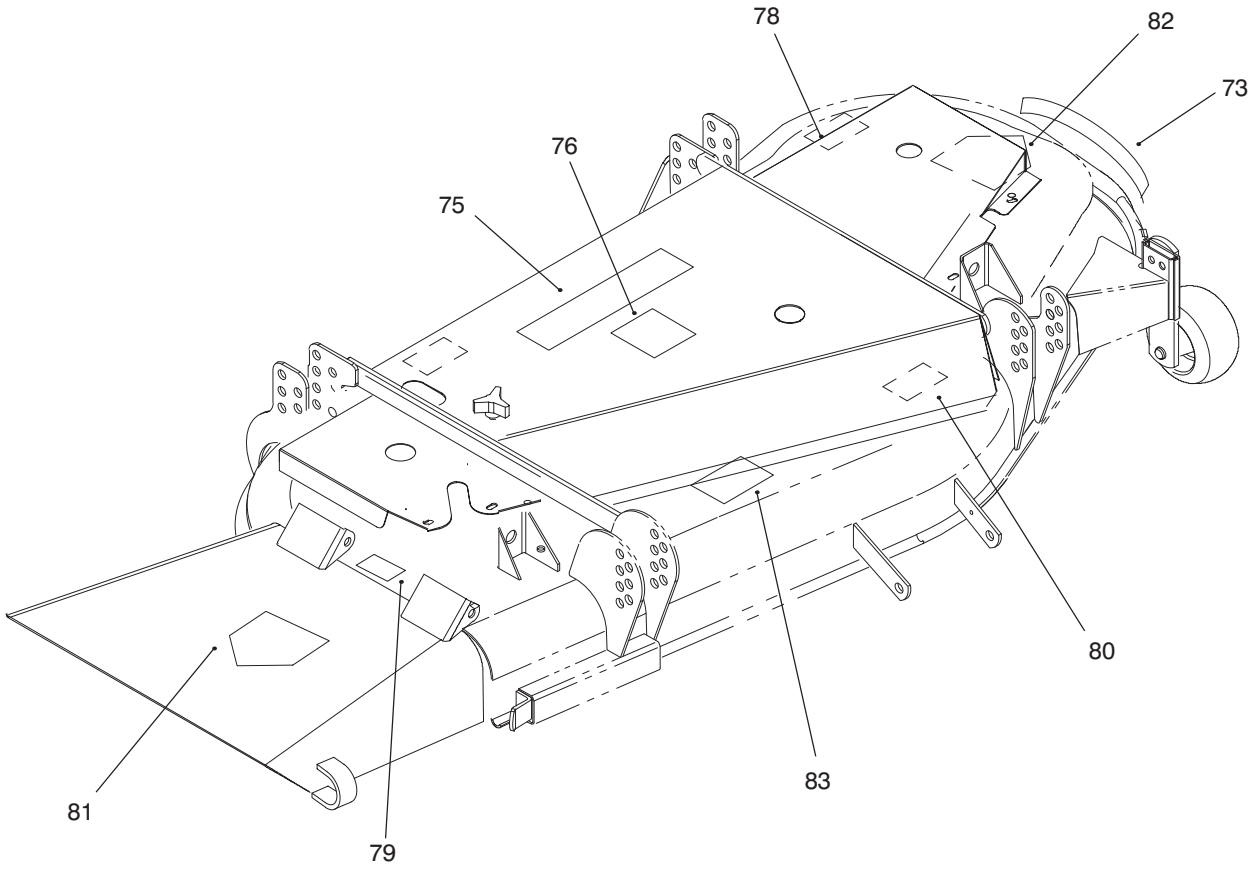

Sheet No.: 6

Decals

Ref. No.	Part No.	Qty.	Description
73	92–7988	1	Decal–Recycler
75	74–2080	1	Decal–Proline
76	51–3960	1	Decal–52”
78	68–8340	1	Decal–Torque
79	66–6380	1	Decal–Danger
80	67–5360	1	Decal–Danger
81	54–9220	1	Decal–Danger
82	43–8480	1	Decal–Danger
83	66–1340	1	Decal–Discharge

Ref. No.	Part No.	Qty.	Description

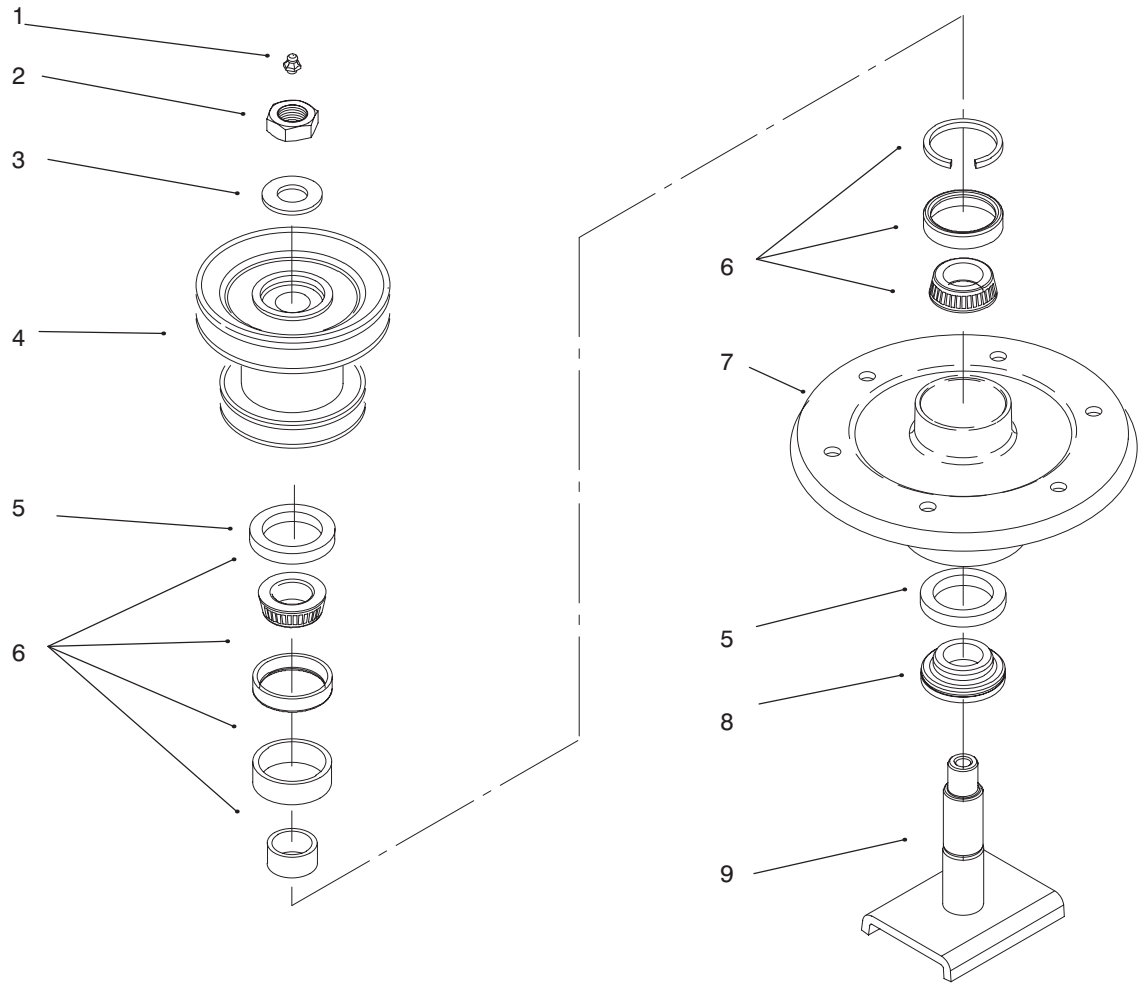

Sheet No.: 101

Spindles No. 54–7781

Ref. No.	Part No.	Qty.	Description
1	302–2	2	Fitting–Grease
2	32146–20	2	Nut–Lock
3	7–4150	2	Washer
4	55–7610	2	Pulley & Hub
5	253–139	4	Seal–Oil
6	46–8530	2	Bearing ASM
7	61–4160	2	Spindle–52”
8	27–0950	2	Spacer–Bearing
9	51–3551	2	Spindle Shaft

Ref. No.	Part No.	Qty.	Description

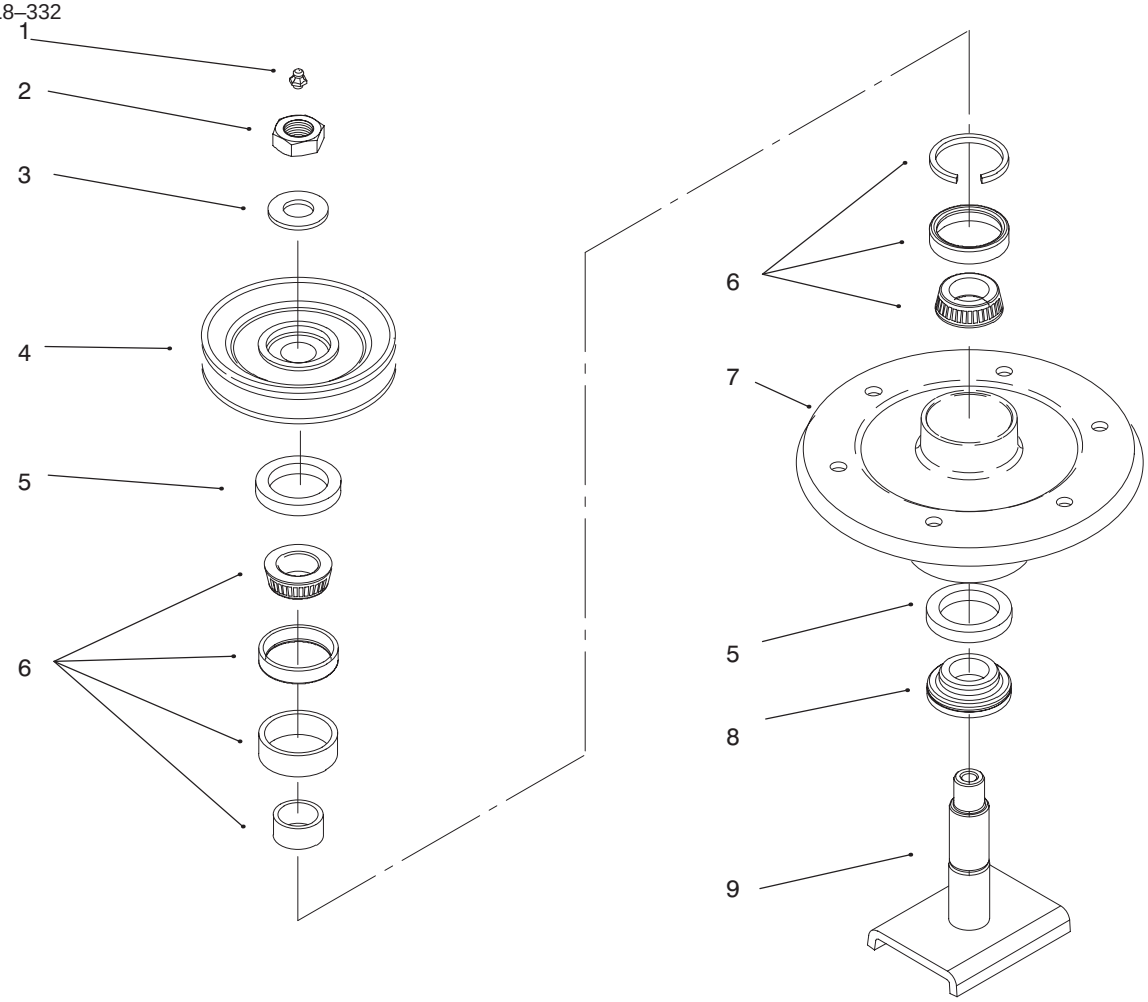

Sheet No.: 102

Spindles No. 27–0870

Ref. No.	Part No.	Qty.	Description
1	302–2	1	Fitting–Grease
2	32146–20	1	Nut–Lock
3	7–4150	1	Washer
4	27–0970	1	Pulley & Hub
5	253–139	2	Seal–Oil
6	46–8530	1	Bearing ASM
7	61–4160	1	Spindle–52”
8	27–0950	1	Spacer–Bearing
9	27–0920	1	Spindle

Ref. No.	Part No.	Qty.	Description

Toro Part Number Index

Part No.	Page No.	Ref. No.	Qty.	Description
3–6781	8	5	58	Washer–Thrust
7–0081	1	1	47	Washer–Special
7–4150	1	8	3	Washer
7–4150	2	7	3	Washer
27–0870	2	1	31	Spindle Housing ASM
27–0920	1	8	9	Spindle
27–0950	1	8	8	Spacer–Bearing
27–0950	2	7	8	Spacer–Bearing
27–0970	1	8	4	Pulley & Hub
27–1160	1	3	39	Belt–Deck Drive
29–4820	2	1	12	Roller
36–1740	2	1	45	Roller–Deck
40–0340	2	1	46	Shaft–Roller
40–6200	1	1	53	Deflector
40–6230	2	1	54	Spring–Torsion
40–6400	1	1	11	Shaft–Roller
41–8440	2	5	52	Spacer–Hardened
42–6482	1	5	60	Plate–Serial
43–8480	1	6	82	Decal–Danger
44–2200	3	2	65	Bolt–Blade
46–8530	1	8	6	Bearing ASM
46–8530	2	7	6	Bearing ASM
46–8560	7	3	27	Screw–Hhf
51–3551	2	7	9	Spindle Shaft
51–3640	1	1	18	Sleeve–Pivot
51–3650–03	1	1	37	Spring–Idler
51–3890	1	3	50	Cover
51–3910	1	3	25	Cover
51–3960	1	6	76	Decal–52”
52–4780	2	1	41	Rod–Belt
54–7781	1	1	17	ASM–Housing
54–8890	8	5	8:5	Bolt – Wheel
54–9220	1	6	81	Decal–Danger
55–7610	2	7	4	Pulley & Hub
55–7620	1	2	85	Guide–Belt
55–7640–03	1	1	29	Arm
55–7650	1	1	33	Plate–Spring
55–7660	1	3	38	v Belt–Drive
57–0690	1	1	10	Pin–Cotter
59–4310	3	4	92	Spacer
61–4160	1	8	7	Spindle–52”
61–4160	2	7	7	Spindle–52”
62–5570	2	5	8:3	Roller Bearing
62–5570	2	5	8:11	Bearing
62–5580	4	5	8:2	Bearing–Outside
62–5580	4	5	8:9	Bushing
62–6520	2	3	71	Knob
65–5940	1	1	30	Pulley–Idler
65–5950	1	1	48	Bushing–Pulley
66–1340	1	6	83	Decal–Discharge
66–6380	1	6	79	Decal–Danger
67–5360	1	6	80	Decal–Danger
68–2350	1	3	108	Plate Gage Wheel
68–2730	1	3	106	Wheel–Gage
68–8340	1	6	78	Decal–Torque
68–8920	2	5	8:2	Wheel Half – Female
68–8930	2	5	8:12	Wheel Half – Male
68–8940	2	5	8:3	Hub – Centered
68–8950	2	5	8:13	Tube w/Valve
68–8960	2	5	8:1	Tire
68–8980	2	5	8:10	Spanner
68–8980	2	5	43	Bushing–Spanner

*Not Illustrated

Toro Part Number Index (cont.)

Part No.	Page No.	Ref. No.	Qty.	Description
68–9840	2	5	8:1	Wheel And Hub ASM
74–0251	2	5	6	Fork
74–0290	2	5	23	Spring–Compression
74–0310	2	5	22	Shaft–Adjusting
74–2080	1	6	75	Decal–Proline
84–5760	3	4	94	Plate–Kicker
85–7450	1	5	77	Decal–HOC
85–7460	1	5	74	Decal–HOC
92–7961	3	2	67	Blade–Recycler
93–1167	2	5	110	Spacer–Castor
94–2504–03	1	4	87	Baffle–Right
94–2505–03	1	4	86	Baffle–Left
94–4185	1	5	9	52” Carrier Frame
253–139	2	8	5	Seal–Oil
253–139	4	7	5	Seal–Oil
256–156	2	5	24	Bushing–Flange
283–2	1	3	109	Pin–Clevis .3
283–55	4	5	3	Pin–Clevis
302–2	2	7	1	Fitting–Grease
302–5	2	5	7	Fitting–Grease
302–61	2	5	8:6	Fitting – Grease
322–2	8	4	90	Screw–HH
322–5	4	4	91	Screw–HH
323–11	1	1	19	Screw
325–19	2	5	5	Screw–HH
3211–8	1	1	34	Screw HH
3211–15	2	2	56	Screw–Cap
3218–5	4	5	28	Nut–Jam
3219–2	4	5	8:8	Nut
3230–18	4	2	62	Screw–CARR
3231–22	20	1	14	Bolt–CARR
3234–6	6	5	88	Screw–Flange
3253–4	4	5	8:7	Washer Lock
3253–27	3	2	66	Washer–Lock
3256–6	4	5	26	Washer–Flat
3256–22	1	3	36	Washer–Flat
3256–24	1	1	32	Washer–Flat
3256–24	1	3	32	Washer–Flat
3256–24	2	3	15	Washer–Flat
3256–24	4	1	15	Washer–Flat
3272–11	3	1	42	Pin–Cotter
3290–271	2	5	59	Rivet–Pop
3290–355	4	5	4	Pin–Hair
3290–467	1	3	107	Pin–Cotter
3296–5	1	1	35	Nut–Lock
3296–5	2	2	57	Nut–Lock
3296–39	1	3	105	Nut–Lock
3296–45	2	5	69	Nut
32128–21	21	1	16	Nut–HF
32128–23	6	5	89	Nut–Lock
32146–20	1	8	2	Nut–Lock
32146–20	2	7	2	Nut–Lock
32151–72	2	3	72	Ring–Retaining
32151–91	2	5	20	Ring–Retaining
32152–1	4	2	64	Nut–Lock
32153–5	2	5	21	Nut–Lock

*Not Illustrated

MAINTENANCE RECORD

Date								

MAINTENANCE RECORD

Date								