FORM NO. 3318–334

TORO®

ProLine

44” Recycler Cutting Unit

Model No. 30146– 690001 & Up

Parts Catalog

ORDERING REPLACEMENT PARTS

To order replacement parts, please supply: the part number, the quantity, and the description of each part desired.

Contents

Description	Page
Deck, Deflector's, Baffle and Cover's	1
Blades, Spindles, Drive & Idler Pulley's	2
Baffles	3
Carrier Frame	4
Belts And Decals	5

Accessories

Description	Model / Parts No.	Description	Model / Parts No.

. .

Part Description Abbreviations

Part descriptions in this catalog may include the following abbreviations.

Abbreviation	Meaning
AR	as required
ASM	assembly
CARR	carriage
DEG	degrees
FH	flat head
GA	gauge
HF	hex flange
HFW	hex flange washer
HH	hex head
HHF	hex head flange
HHST	hex head self tapping
HJ	hex jam
HOC	height-of-cut
HS	hex socket
HSBH	hex socket button head
HSFH	hex socket flat head
HSH	hex socket head
HWH	hex washer head
HWHTF	hex washer head thread forming
INC	incorporated
LH	left hand
PH	pan head
PPH	Phillips pan head
PTO	power take off
RH	right hand
SFH	slotted fillister head
SH	square head
SHWH	slotted hex washer head
SPH	slotted pan head
STD	standard
TAP	self tapping
TH	truss head
TTH	Torx truss head
WH	wing head

Important Format Explanations

This catalog uses special formats to convey information in illustrations and parts lists. Specifically, one format is used in conjunction with service assemblies and another with quantities associated with reference numbers.

Service Assemblies

Parts within service assemblies have reference numbers in the form *X:Y*. *X* is the reference number of the service assembly and *Y* is a sequential number unique to each part within the service assembly.

© The TORO Company — 1996
All Rights Reserved

For example, a wheel assembly might be identified by reference number 6, the tire by 6:1, the valve by 6:2, and the wheel by 6:3. When you order the assembly identified by reference number 6, you receive all parts identified by reference numbers 6:1, 6:2, and 6:3. However, you may also order any part individually.

Reference numbers of this type appear in part lists and as callouts in illustrations.

Reference Numbers with Quantities

Illustrations may have a quantity in parentheses next to a reference number, in the form *X (Y). X* is the reference number. *Y* in parentheses is the quantity of the part identified by the reference number.

For example, the illustration callout 4 (2) indicates that two parts are used in that instance.

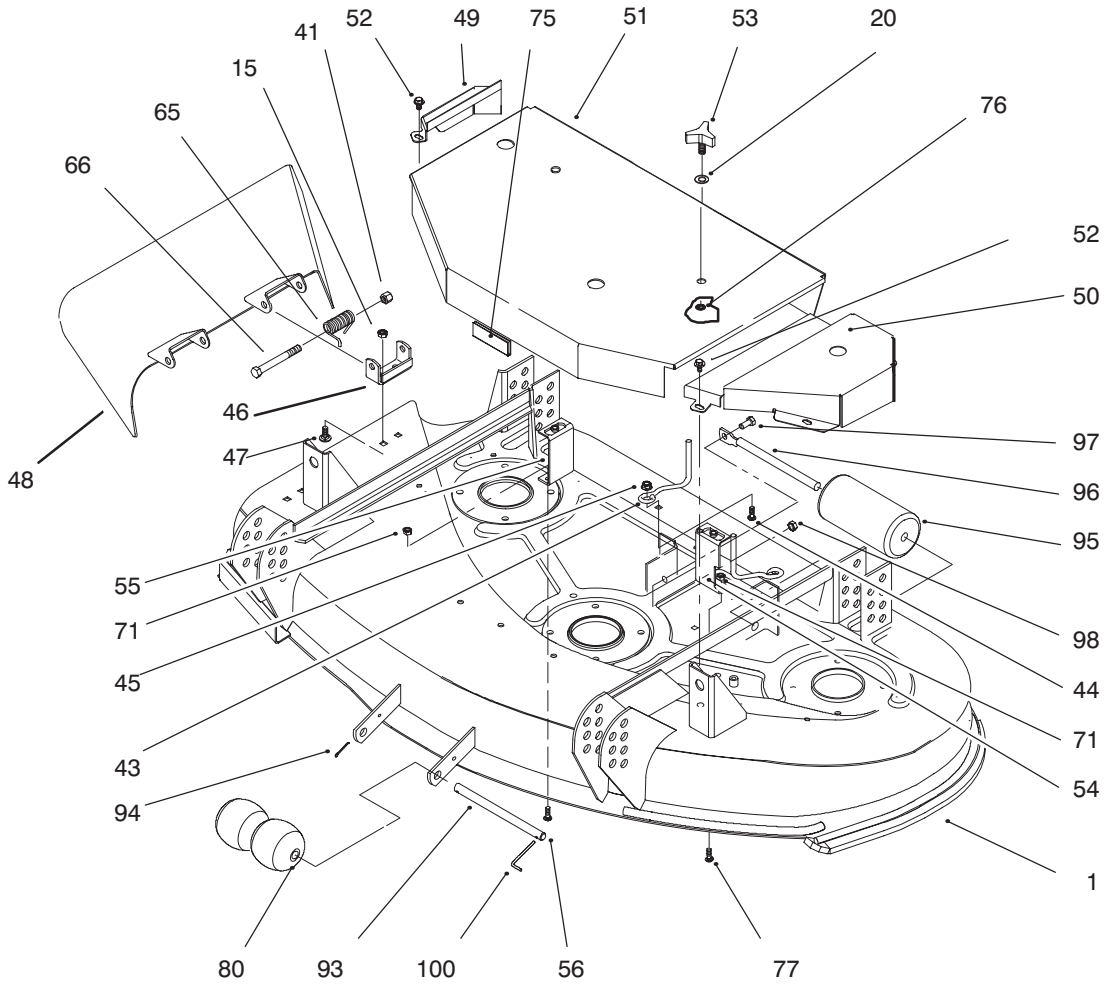

Sheet No.: 2

Deck, Deflectors, and Covers

Ref. No.	Part No.	Qty.	Description
1	94–6785	1	44” Recycler Deck
15	32152–1	4	Nut–Lock Cone
20	3256–24	2	Washer–Flat
41	3296–5	2	Nut–Lock
43	52–4780	2	Rod–Belt
44	3230–2	2	Screw–CARR
45	32128–13	2	Nut–Lock Flg
46	29–5590	2	Bracket–Pivot
47	3230–18	4	Screw–CARR
48	57–6970	1	Grass Deflector
49	54–2250	1	Cover–Deck
50	54–2220	1	Cover–Deck
51	54–3190	1	Cover–Deck
52	46–8560	5	Screw–Hhf
53	62–6520	2	Knob
54	54–3240	1	Cover Bracket–LH
55	54–3230	1	Cover Bracket–RH
56	3229–1	2	Bolt–CARR
65	40–6230	2	Spring–Torsion
66	3211–15	2	Screw–Cap
71	3296–42	4	Nut–Lock
75	29–0641	5	Jiffy Trim
76	32151–72	2	Ring–Retaining
77	3229–3	2	Bolt–Carriage
80	29–4820	2	Roller
93	40–6400	1	Shaft–Roller

Ref. No.	Part No.	Qty.	Description
94	3272–11	1	Pin–Cotter
95	36–1740	1	Roller–Deck
96	62–4480	1	Rod–Roller
97	322–3	1	Screw–HH
98	3296–29	1	Nut–Lock
100	57–0690	1	Pin–Cotter

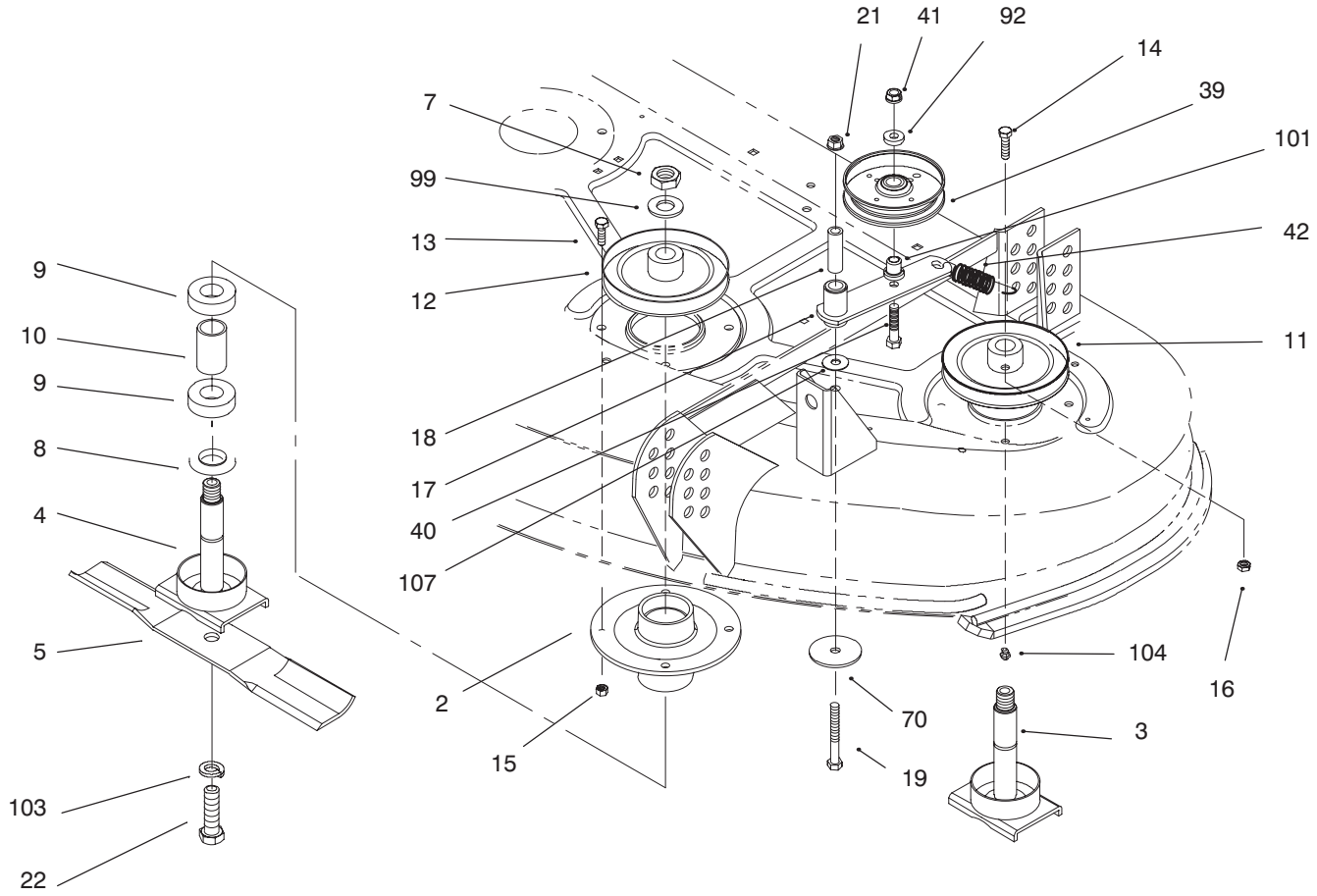

Sheet No.: 3

Blades, Spindles, Drive & Idler Pulleys

Ref. No.	Part No.	Qty.	Description
2	67–7590	3	Housing–Spindle
3	71–2780	2	Shaft
4	71–2790	1	Spindle Shaft
5	92–7952	3	Blade–Recycler
7	32146–20	3	Nut–Lock Jam
8	67–7570	3	Spacer–Spindle
9	251–257	6	Bearing
10	67–7580	3	Spacer–Bearing
11	67–7690	2	Pulley
12	92–7972	1	Pulley
13	322–4	11	Screw–HH
14	322–6	1	Screw–HH
15	32152–1	12	Nut–Lock Cone
16	3218–2	1	Nut–Hex Jam
17	92–1657	1	Arm & Bushing–Idler
18	79–2760	1	Spacer–Idler Pivot
19	323–13	1	Screw–HH
21	32128–19	1	Nut–Lock
22	51–4060	3	Bolt–Blade
39	65–5940	1	Pulley–Idler
40	3211–8	1	Screw HH
41	3296–5	1	Nut–Lock
42	54–2730	1	Spring–Extension
70	20–9530	1	Washer–End
92	7–0081	1	Washer–Special
99	7–4150	3	Washer

Ref. No.	Part No.	Qty.	Description
101	65–5950	1	Bushing–Pulley
103	3253–8	3	Washer–Lk
104	302–2	3	Fitting–Grease
107	52–2860	1	Washer

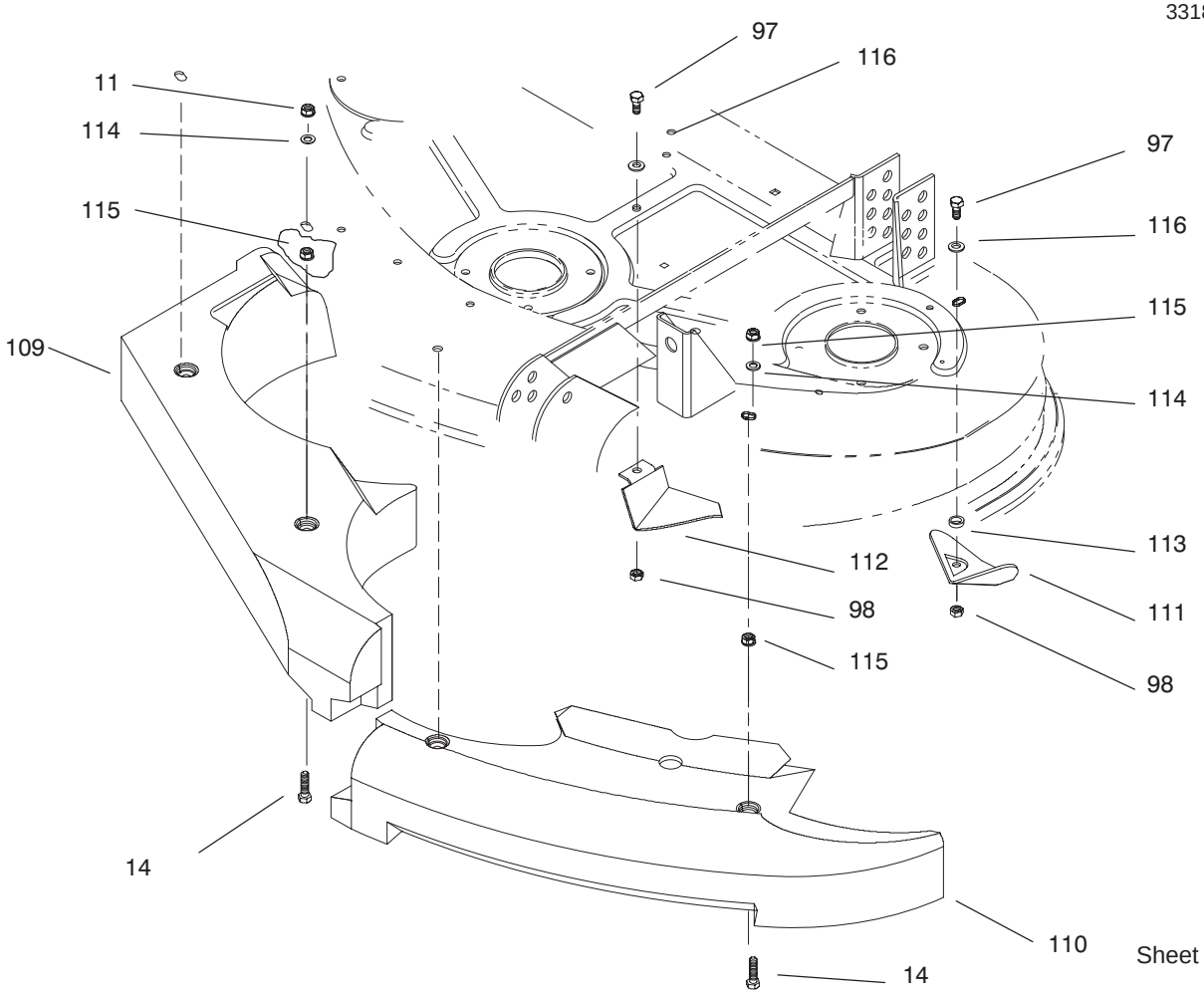

Sheet No.: 4

Baffles and Kickers

Ref. No.	Part No.	Qty.	Description
14	322–6	4	Screw–HH
97	322–3	4	Screw–HH
98	3296–29	4	Nut–Lock
109	93–7651	1	Baffle–RH
110	93–7652	1	Baffle–LH
111	84–5760	3	Plate–Kicker
112	93–1196	1	Kicker
113	59–4310	3	Spacer
114	3290–456	4	Washer–Lock
115	32149–1	8	Nut–Keps
116	3256–23	4	Washer–Flat

Ref. No.	Part No.	Qty.	Description

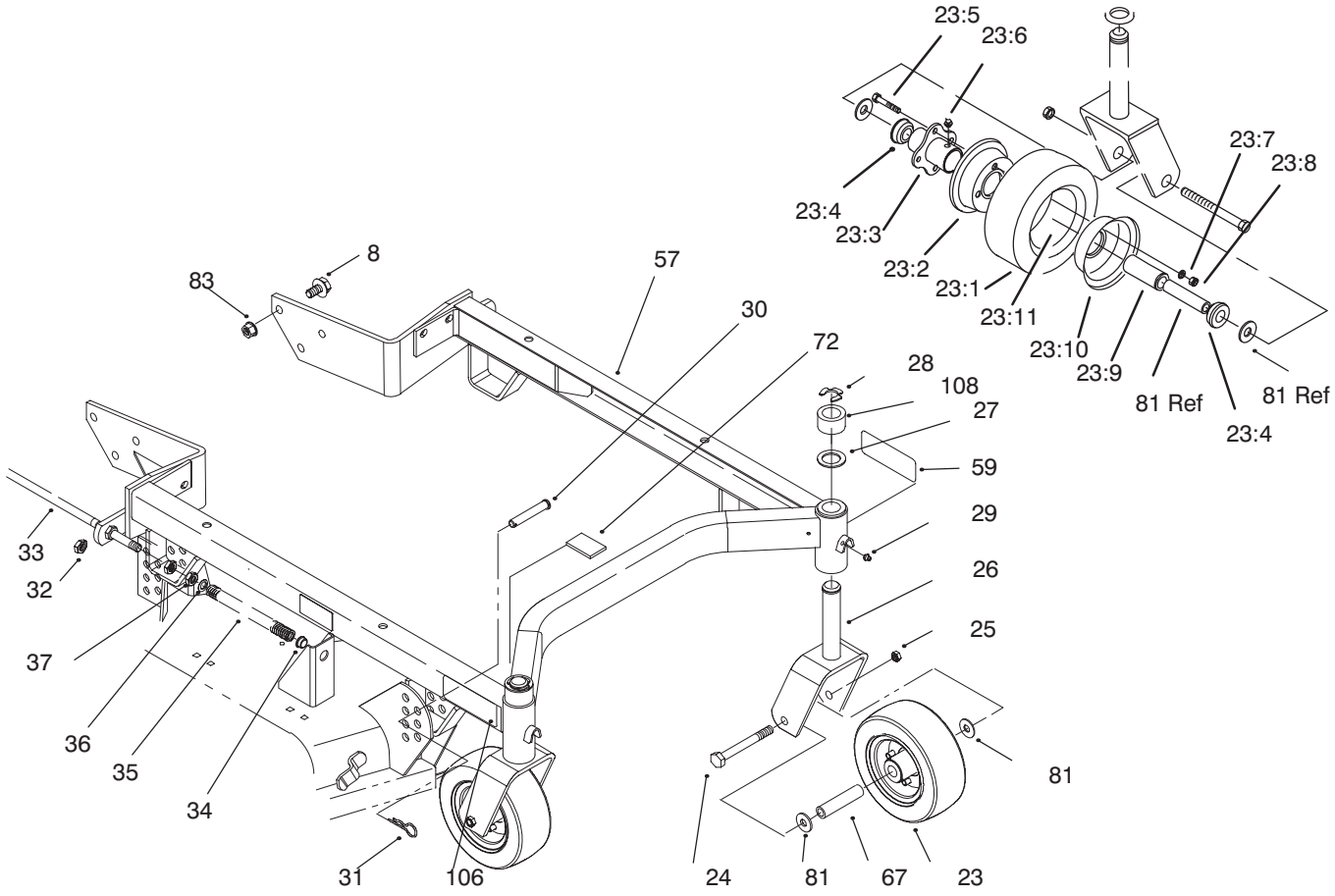

Sheet No.: 5

Carrier Frame

Ref. No.	Part No.	Qty.	Description
23	13–3869	2	ASM–Pneumatic Tire Incl. 23:1 – 23:11
23:1	68–8960	2	Tire
23:2	68–8920	2	Wheel Half – Female
23:3	68–8940	2	Hub – Centered
23:4	62–5580	4	Bushing
23:5	54–8890	8	Bolt – Wheel
23:6	302–61	2	Fitting – Grease
23:7	3253–4	4	Washer Lock
23:8	3219–2	4	Nut
23:9	62–5570	2	Bearing
23:10	68–8930	2	Wheel Half – Male
23:11	68–8950	2	Tube w/Valve
24	325–19	2	Screw–HH
25	32153–5	2	Nut–Lock
26	74–0251	2	Fork
27	3–6781	8	Washer–Thrust
28	32151–91	2	Ring–Retaining
29	302–5	2	Fitting–Grease
30	283–55	4	Pin–Clevis
31	3290–355	4	Pin–Hair
32	3296–45	2	Nut–Esna
33	74–0310	2	Shaft–Adjusting
34	256–156	2	Bushing–Flange
35	74–0290	2	Spring–Compression
36	41–8440	2	Spacer–Hardened

Ref. No.	Part No.	Qty.	Description
37	3218–5	4	Nut–Jam
57	94–4175	1	Suspension
59	85–7450	1	Decal–HOC
67	68–8980	2	Bushing–Spanner
68	42–6482	1	Plate–Serial
69	3290–271	2	Rivet–Pop
72	74–0340	2	Cushion–Rubber
81	3256–6	4	Washer–Flat
82	3234–6	6	Screw–Flange
83	32128–23	6	Nut–Lock
106	85–7460	1	Decal–HOC
108	93–1167	2	Spacer–Castor

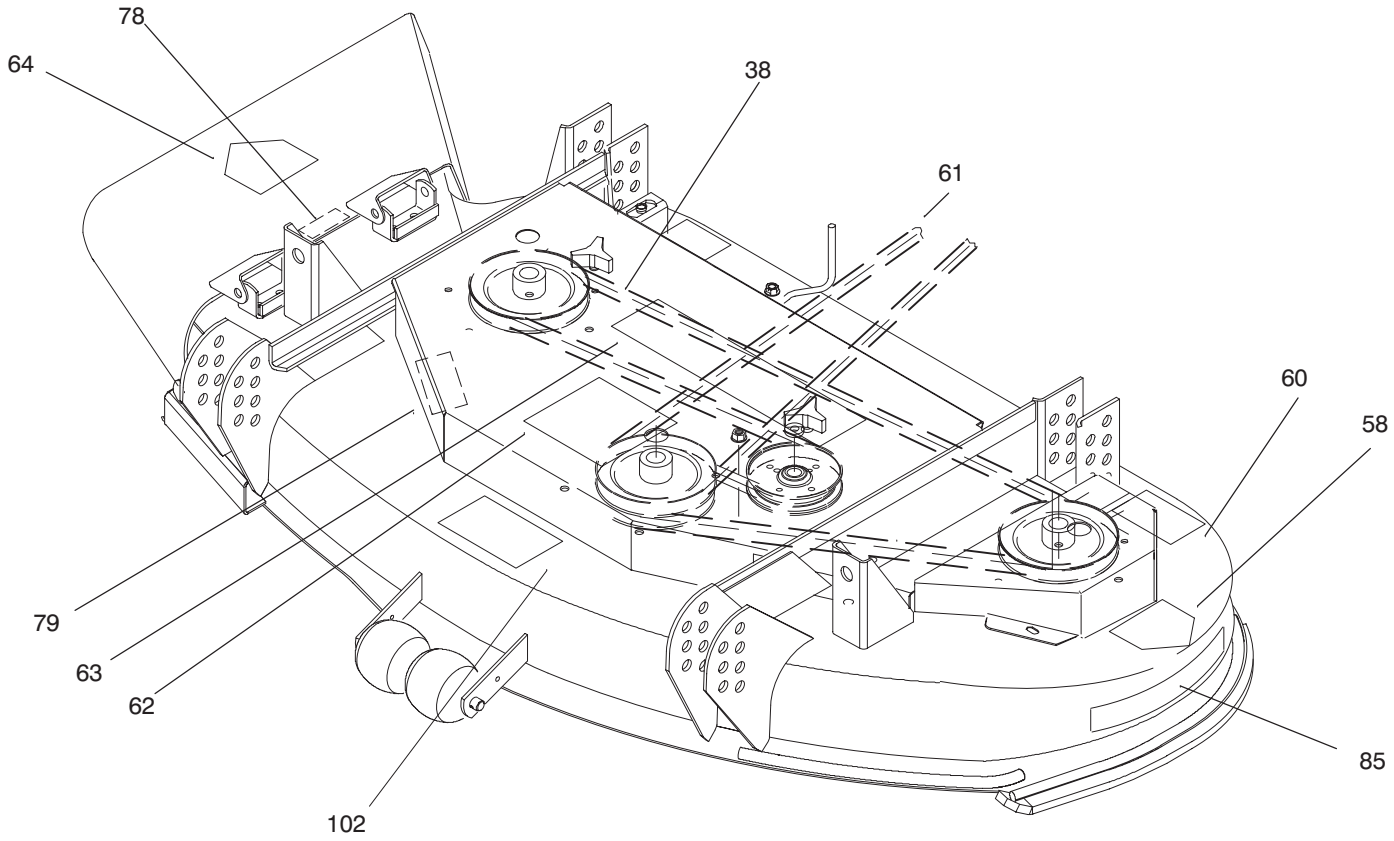

Sheet No.: 6

Belts And Decals

Ref. No.	Part No.	Qty.	Description
38	27–1160	1	Belt–Deck Drive
58	43–8480	1	Decal–Danger
60	68–8340	1	Decal–Torque
61	54–2751	1	V–Belt (69.0)
62	54–2760	1	Decal–44”
63	74–2080	1	Decal–Proline
64	54–9220	1	Decal–Danger
78	66–6380	1	Decal–Danger
79	67–5360	1	Decal–Danger
85	92–7988	1	Decal–Recycler
*88	3256–2	A/R	Washer–Flat
102	66–1340	1	Decal–Discharge

Ref. No.	Part No.	Qty.	Description

* Not Illustrated

Toro Part Number Index

Part No.	Page No.	Ref. No.	Qty.	Description
3–6781	8	”4”	27	Washer–Thrust
7–0081	1	”2”	92	Washer–Special
7–4150	3	”2”	99	Washer
13–3869	”4”	1	2	Tire–ASM
20–9530	1	”2”	70	Washer–End
29–0641	5	”1”	75	Jiffy Trim
29–4820	2	”1”	80	Roller
29–5590	2	”1”	46	Bracket–Pivot
36–1740	1	”1”	95	Roller–Deck
40–6230	2	”1”	65	Spring–Torsion
40–6400	1	”1”	93	Shaft–Roller
41–8440	2	”4”	36	Spacer–Hardened
42–6482	1	”4”	68	Plate–Serial
43–8480	1	”5”	58	Decal–Danger
46–8560	5	”1”	52	Screw–Hhf
51–4060	3	”2”	22	Bolt–Blade
52–2860	1	”2”	107	Washer
52–4780	2	”1”	43	Rod–Belt
54–2220	1	”1”	50	Cover–Deck
54–2250	1	”1”	49	Cover–Deck
54–2730	1	”2”	42	Spring–Extension
54–2751	1	”5”	61	V–Belt (69.0)
54–2760	1	”5”	62	Decal–44”
54–3190	1	”1”	51	Cover–Deck
54–3230	1	”1”	55	Cover Bracket–RH
54–3240	1	”1”	54	Cover Bracket–LH
54–8890	8	”4”	23:5	Bolt – Wheel
54–9220	1	”5”	64	Decal–Danger
57–0690	1	”1”	100	Pin–Cotter
57–6970	1	”1”	48	Grass Deflector
59–4310	3	”3”	113	Spacer
62–4480	1	”1”	96	Rod–Roller
62–5570	2	”4”	23:9	Bearing
62–5580	4	”4”	23:4	Bushing
62–6520	2	”1”	53	Knob
65–5940	1	”2”	39	Pulley–Idler
65–5950	1	”2”	101	Bushing–Pulley
66–1340	1	”5”	102	Decal–Discharge
66–6380	1	”5”	78	Decal–Danger
67–5360	1	”5”	79	Decal–Danger
67–7570	3	”2”	8	Spacer–Spindle
67–7580	3	”2”	10	Spacer–Bearing
67–7690	2	”2”	11	Pulley
68–8340	1	”5”	60	Decal–Torque
68–8920	2	”4”	23:2	Wheel Half – Female
68–8930	2	”4”	23:10	Wheel Half – Male
68–8940	2	”4”	23:3	Hub – Centered
68–8950	2	”4”	23:11	Tube w/Valve
68–8960	2	”4”	23:1	Tire
68–8980	2	”4”	67	Bushing–Spanner
71–2780	2	”2”	3	Shaft
71–2790	1	”2”	4	Spindle Shaft
74–0251	2	”4”	26	Fork
74–0290	2	”4”	35	Spring–Compression
74–0310	2	”4”	33	Shaft–Adjusting
74–0340	2	”4”	72	Cushion–Rubber
74–2080	1	”5”	63	Decal–Proline
79–2760	1	”2”	18	Spacer–Idler Pivot
84–5760	3	”3”	111	Plate–Kicker

*Not Illustrated

Toro Part Number Index (cont.)

Part No.	Page No.	Ref. No.	Qty.	Description
85–7450	1	”4”	59	Decal–HOC
85–7460	1	”4”	106	Decal–HOC
92–1657	1	”2”	17	Arm & Bushing–Idler
92–7952	3	”2”	5	Blade–Recycler
92–7972	1	”2”	12	Pulley
92–7988	1	”5”	85	Decal–Recycler
93–1167	2	”4”	108	Spacer–Castor
93–1196	1	”3”	112	Kicker
93–7651	1	”3”	109	Baffle–RH
93–7652	1	”3”	110	Baffle–LH
94–4175	1	”4”	57	Suspension
251–257	6	”2”	9	Bearing
256–156	2	”4”	34	Bushing–Flange
283–55	4	”4”	30	Pin–Clevis
302–2	3	”2”	104	Fitting–Grease
302–5	2	”4”	29	Fitting–Grease
302–61	2	”4”	23:6	Fitting – Grease
322–3	1	”1”	97	Screw–HH
322–3	4	”3”	97	Screw–HH
322–4	11	”2”	13	Screw–HH
322–6	1	”2”	14	Screw–HH
323–13	1	”2”	19	Screw–HH
325–19	2	”4”	24	Screw–HH
3211–8	1	”2”	40	Screw HH
3211–15	2	”1”	66	Screw–Cap
3218–2	1	”2”	16	Nut–Hex Jam
3218–5	4	”4”	37	Nut–Jam
3219–2	4	”4”	23:8	Nut
3229–1	2	”1”	56	Bolt–CARR
3229–3	2	”1”	77	Bolt–Carriage
3230–2	2	”1”	44	Screw–CARR
3230–18	4	”1”	47	Screw–CARR
3234–6	6	”4”	82	Screw–Flange
3253–4	4	”4”	23:7	Washer Lock
3253–8	3	”2”	103	Washer–Lk
3256–2	A/R	”5”	*88	Washer–Flat
3256–6	4	”4”	81	Washer–Flat
3256–23	4	”3”	116	Washer–Flat
3256–24	2	”1”	20	Washer–Flat
3272–11	1	”1”	94	Pin–Cotter
3290–271	2	”4”	69	Rivet–Pop
3290–355	4	”4”	31	Pin–Hair
3290–456	4	”3”	114	Washer–Lock
3296–5	1	”2”	41	Nut–Lock
3296–5	2	”1”	41	Nut–Lock
3296–29	1	”1”	98	Nut–Lock
3296–29	4	”3”	98	Nut–Lock
3296–42	4	”1”	71	Nut–Lock
3296–45	2	”4”	32	Nut–Esna
32128–13	2	”1”	45	Nut–Lock Flange
32128–19	1	”2”	21	Nut–Lock
32128–23	6	”4”	83	Nut–Lock
32146–20	3	”2”	7	Nut–Lock Jam
32149–1	8	”3”	115	Nut–Keps
32151–72	2	”1”	76	Ring–Retaining
32151–91	2	”4”	28	Ring–Retaining
32152–1	12	”2”	15	Nut–Lock Cone
32152–1	4	”1”	15	Nut–Lock Cone

*Not Illustrated

Toro Part Number Index (cont.)

Part No.	Page No.	Ref. No.	Qty.	Description
32153–5	2	”4”	25	Nut–Lock

*Not Illustrated