Form No. 3365-439 Rev B

TORO®

Count on it.

Parts Catalog

Rear Discharge Kit

DH 140 Lawn Tractor

Model No. 117-0054

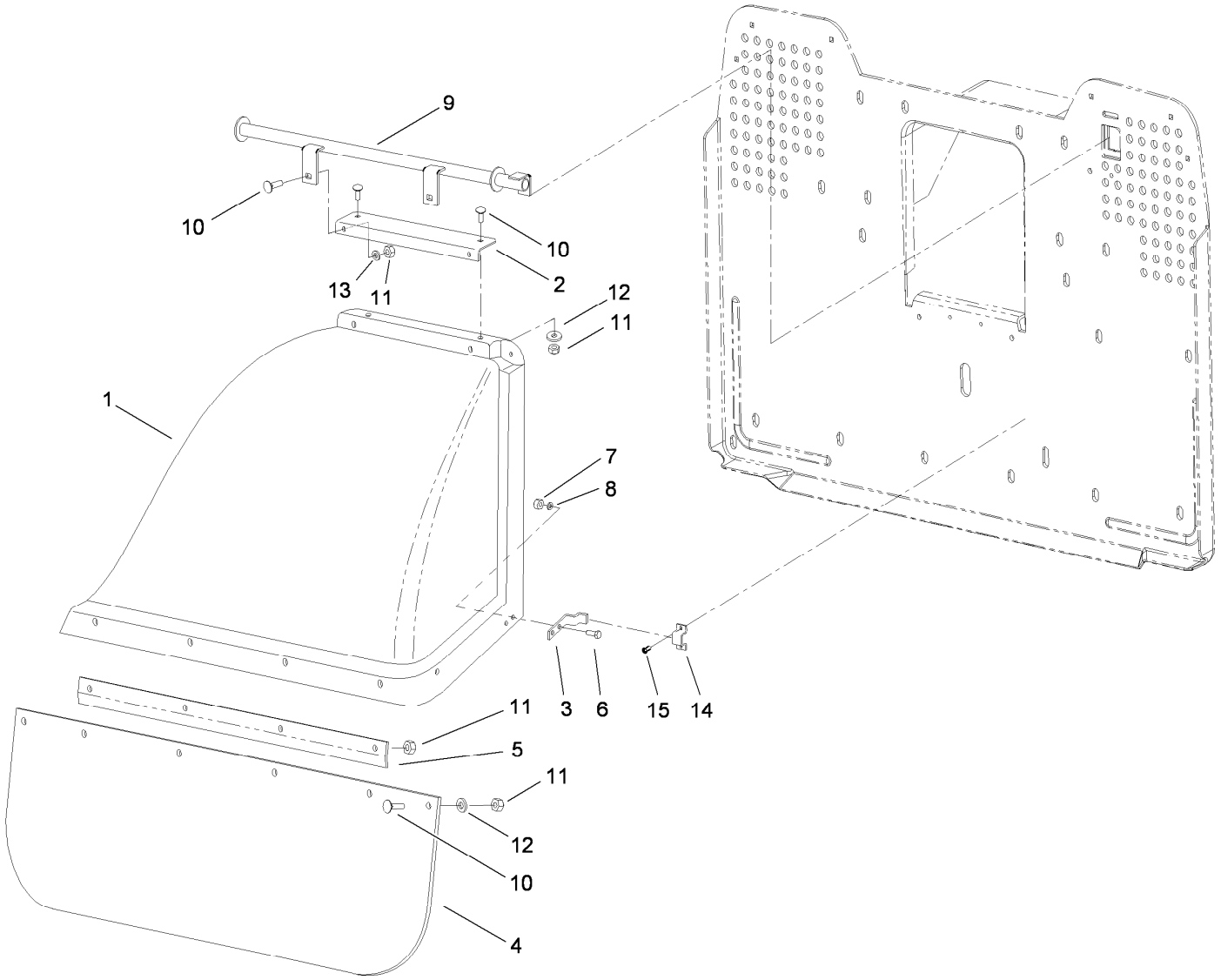

Rear Deflector Assembly No. 117-0054

Ref.	*Part Number*	*Qty.*	*Description*
1	119-5494	1	Deflector
2	119-5495	1	Brace
3	105-6209	2	Clip-Deflector
4	119-5496	1	Shield
5	119-5518	1	Bar
6	33113-016	4	Screw-HH
7	33023-00	4	Nut-Lock
8	104-2931	4	Washer-Flat
9	119-5497	1	Handle-Deflector
10	104-2948	10	Bolt-Carriage
11	87-5140	10	Nut-Lock
12	104-2943	4	Washer-Flat
13	52-6430	2	Washer
14	105-6203	2	Clip
15	105-6208	4	Screw