Form No. 3363-682 Rev C

TORO®

Count on it.

Parts Catalog

# Workman® MDE Utility Vehicle

**Model No. 07299—Serial No. 310000001 and Up**

Register at www.Toro.com.

Original Instructions (EN)

# Ordering Replacement Parts

To order replacement parts, please supply the part number, the quantity, and the description of each part desired.

**Understanding Reference Numbers**

Each identified part in an illustration has a reference number. The reference number for a part also appears in the parts list, along with other information about the part.

This catalog uses two special reference number formats, one to indicate parts in a service assembly and another to indicate the quantity of a given part in an illustration.

**Service Assembly Reference Numbers**

Parts in service assemblies have reference numbers in the form a:b. The a represents the reference number of the entire service assembly and the b represents a sequential number unique to each part within the service assembly.

For example, a wheel assembly might be identified by reference number 6, the tire by 6:1, the valve by 6:2, and the wheel by 6:3. When you order the assembly identified by reference number 6, you receive all parts identified by reference numbers 6:1,6:2, and 6:3. However, you may also order any part individually. Reference numbers of this type appear in illustration and in parts lists.

**Reference Numbers Indicating Quantity**

In an illustration, if a reference number indicates more than one part, the reference number has the form nX y. The n represents the quantity of the part, the X is the multiplication symbol, and the y represents the reference number.

For example, in an illustration, the reference number 2X 37 means that two of the parts identified by reference number 37 are indicated.

# List of Abbreviations

**AR:** as required

**ASM:** assembly

**BBC:** blade brake control

**BHTF:** button head thread forming

**CARR:** carriage

**CCW:** counter clockwise

**CW:** clockwise

**DEG:** degrees

**ECM:** electronic control module

**EXT:** external

**FH:** flat head

**GA:** gauge

**HD:** heavy-duty

**HF:** hex flange

**HH:** hex head

**HHF:** hex head flange

**HHFTF:** hex head flange thread forming

**HJ:** hex jam

**HLH:** hex lag head

**HOC:** height-of-cut

**HSBH:** hex socket button head

**HSFH:** hex socket flat head

**HSH:** hex socket head

**HWH:** hex washer head

**HWHTF:** hex washer head thread forming

**HYD:** hydraulic

**LH:** left hand

**NI:** nylon insert

**NPTF:** national pipe thread fine

**PFH:** phillips flat head

**PPH:** phillips pan head

**PPHTF:** phillips pan head thread forming

**PRH:** phillips round head

**PTH:** phillips truss head

**PTO:** power-take-off

**RH:** right hand

**ROPS:** roll-over protection system

**RRB:** rear roller brush

**SFH:** slotted fillister head

**SHH:** slotted hex head

**SHWH:** slotted hex washer head

**SPH:** slotted pan head

**SQH:** square head

**SRH:** slotted round head

**STD:** standard

**TAP:** self tapping

**TTH:** torx truss head

© 2010—The Toro® Company
8111 Lyndale Avenue South
Bloomington, MN 55420



Contact us at www.Toro.com.
Printed in the USA.
All Rights Reserved

# Contents

Dash Assembly . . . . . 4
Solenoid Assembly No. 104-7135 . . . . . 5
Pedal Box Assembly . . . . . 6
Master Cylinder and Brake Line Assembly . . . . . 7
Master Cylinder Assembly No. 104-6782 . . . . . 8
Frame Assembly . . . . . 9
Seat Base Assembly . . . . . 10
Offboard 48 Volt Charger Assembly No. 112-3072 . . . . . 11
Front Tire, Spindle and Tie Rod Assembly . . . . . 12
Controller Assembly . . . . . 13
Battery and Transaxle Assembly . . . . . 14
Electric Motor Assembly No. 104-7335 . . . . . 15
Electric Transaxle Assembly No. 114-8330 . . . . . 16
LH Rear Brake Assembly No. 114-8332 . . . . . 17
RH Rear Brake Assembly No. 114-8331 . . . . . 18
Upper Steering Assembly . . . . . 19
Steering Box Assembly No. 112-3130 . . . . . 20
Box and Tailgate Installation Assembly . . . . . 21
Box and Tailgate Assembly . . . . . 22
Hood and Fender Assembly . . . . . 23
Attachments and Accessories . . . . . 24

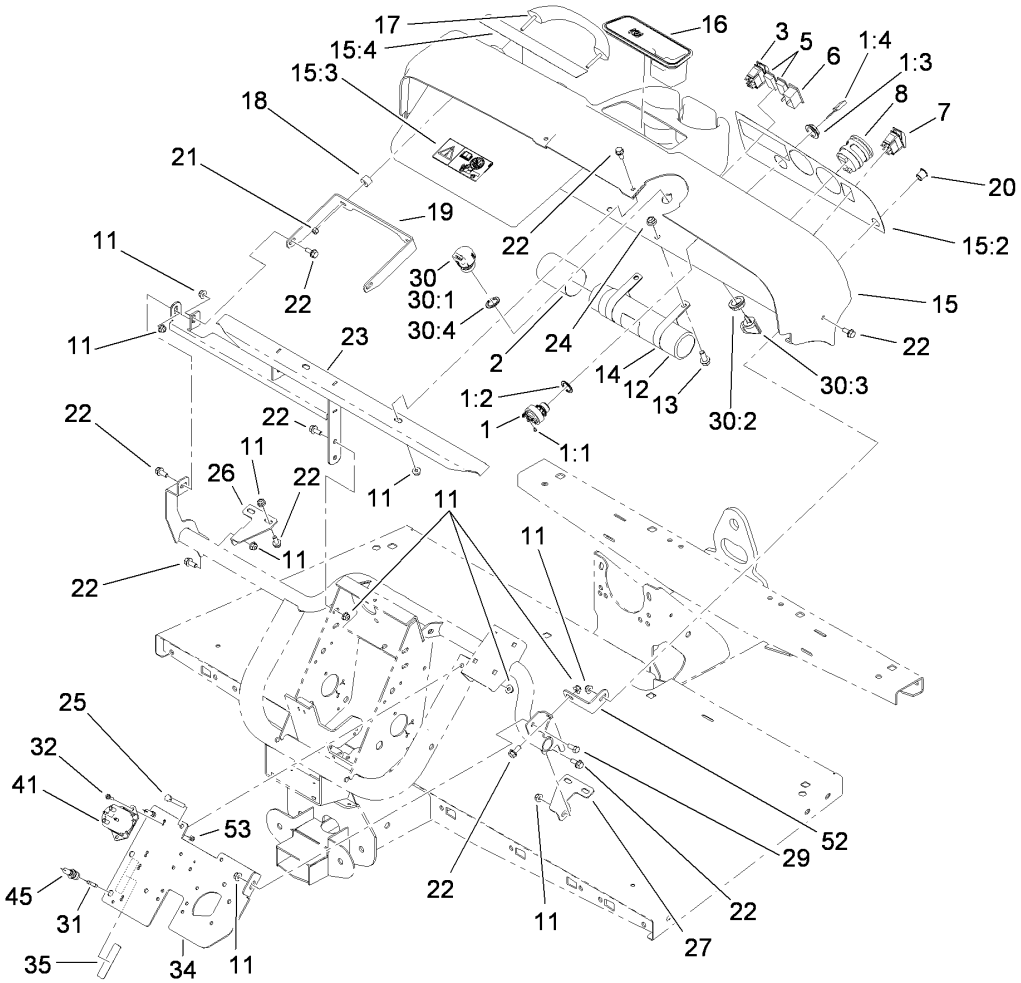


# Dash Assembly

| Ref. | Part Number | Qty. | Description |
|---|---|---|---|
| 1 | 107-0348 | 1 | Switch-Key, 48V |
| 1:1 | 3250-28 | 3 | Screw |
| 1:2 | 108-8659 | 1 | Washer-Backup |
| 1:3 | 108-8660 | 1 | Nut-Mounting |
| 1:4 | 108-6994 | 1 | Key-Ignition |
| 2 | 104-7048 | 1 | Cap-Housing |
| 3 | 107-0255 | 1 | Switch |
| 5 | 99-7420 | 2 | Plug-Hole |
| 6 | 104-7129 | 1 | Light-Indicator |
| 7 | 107-0747 | 1 | Switch-Rocker |
| 8 | 107-0260 | 1 | Guage-Hour/Battery Level, 48 Volt |
| 11 | 104-8300 | 18 | Nut-Flange, NI |
| 12 | 104-7050 | 1 | Tube-Manual |
| 13 | 3234-11 | 2 | Screw-HHF |
| 14 | 2412-133 | 2 | R-Clamp |
| 15 | 114-8311 | 1 | Dash ASM |
| 15:2 | 112-3310 | 1 | Decal-Dash, Ce |
| 15:3 | 104-7215 | 1 | Decal-Danger |
| 15:4 | 115-2412 | 1 | Decal-No Storage |
| 16 | 104-6930 | 1 | Plug-Rubber |
| 17 | 112-3320 | 1 | Handle-Grip |
| 18 | 114-8301 | 2 | Spacer |

| Ref. | Part Number | Qty. | Description |
|---|---|---|---|
| 19 | 112-3391-03 | 1 | Bracket-Grip, Handle |
| 20 | 94-5627 | 1 | Plug |
| 21 | 104-7201 | 2 | Nut-HF |
| 22 | 110-5053 | 15 | Screw-Flange |
| 23 | 115-7651-03 | 1 | Dash Support ASM |
| 24 | 104-8301 | 2 | Nut-Flange, NI |
| 25 | 322-11 | 2 | Screw-HH |
| 26 | 114-8304 | 1 | Bracket-Dash Mount, RH |
| 27 | 114-8312 | 1 | Bracket-Dash Mount, LH |
| 29 | 322-3 | 1 | Screw-HH |
| 30 | 110-2580 | 1 | Switch-Key, Supervisor |
| 30:1 | | 1 | Switch-Key ● |
| 30:2 | 108-8660 | 1 | Nut-Mounting |
| 30:3 | 110-5221 | 1 | Set-Key, Supervisor |
| 30:4 | 108-8659 | 1 | Washer-Backup |
| 31 | 98-8876 | 2 | Fuse-10 Amp |
| 32 | 32105-13 | 2 | Screw-HWH |
| 34 | 112-3376-03 | 1 | Plate-Mount, Electrical |
| 35 | 115-7621 | 1 | Decal-Electrical |
| 41 | 104-7135 | 1 | Solenoid |
| 45 | 218-489 | 2 | Holder-Fuse |
| 52 | 114-8305 | 1 | Angle-Mount, Dash (LH) |
| 53 | 3296-2 | 2 | Nut-Lock, NI |

● Not serviced separately

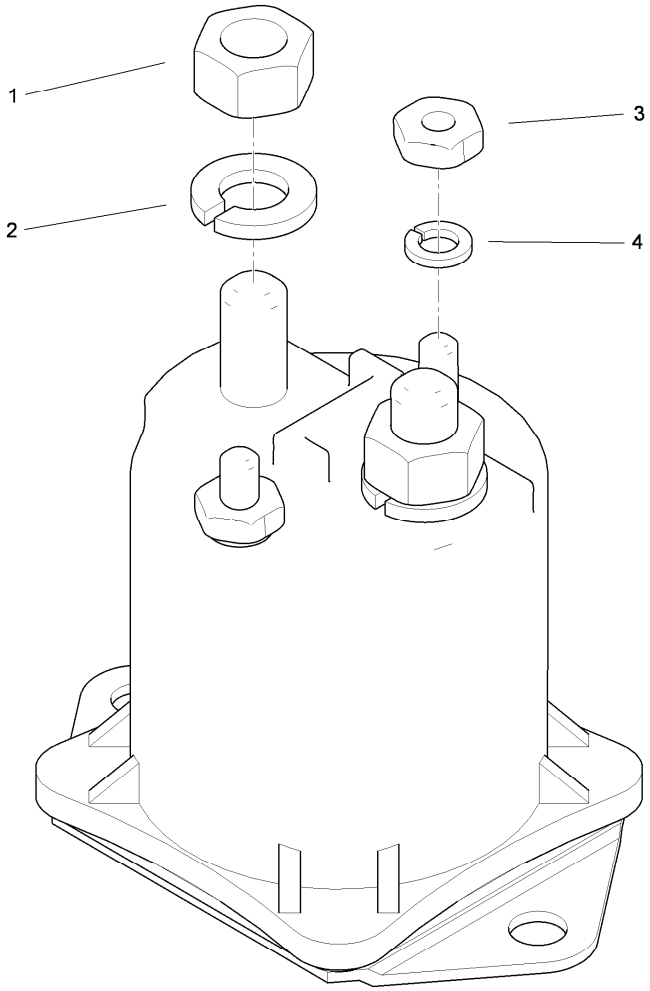


# Solenoid Assembly No. 104-7135

| *Ref.* | *Part Number* | *Qty.* | *Description* |
|---|---|---|---|
| 1 | 3217-6 | 2 | Nut-Hex |
| 2 | 3253-4 | 2 | Washer-Lock |
| 3 | 3219-14 | 2 | Nut-Hex |
| 4 | 3253-17 | 2 | Washer-Lock |

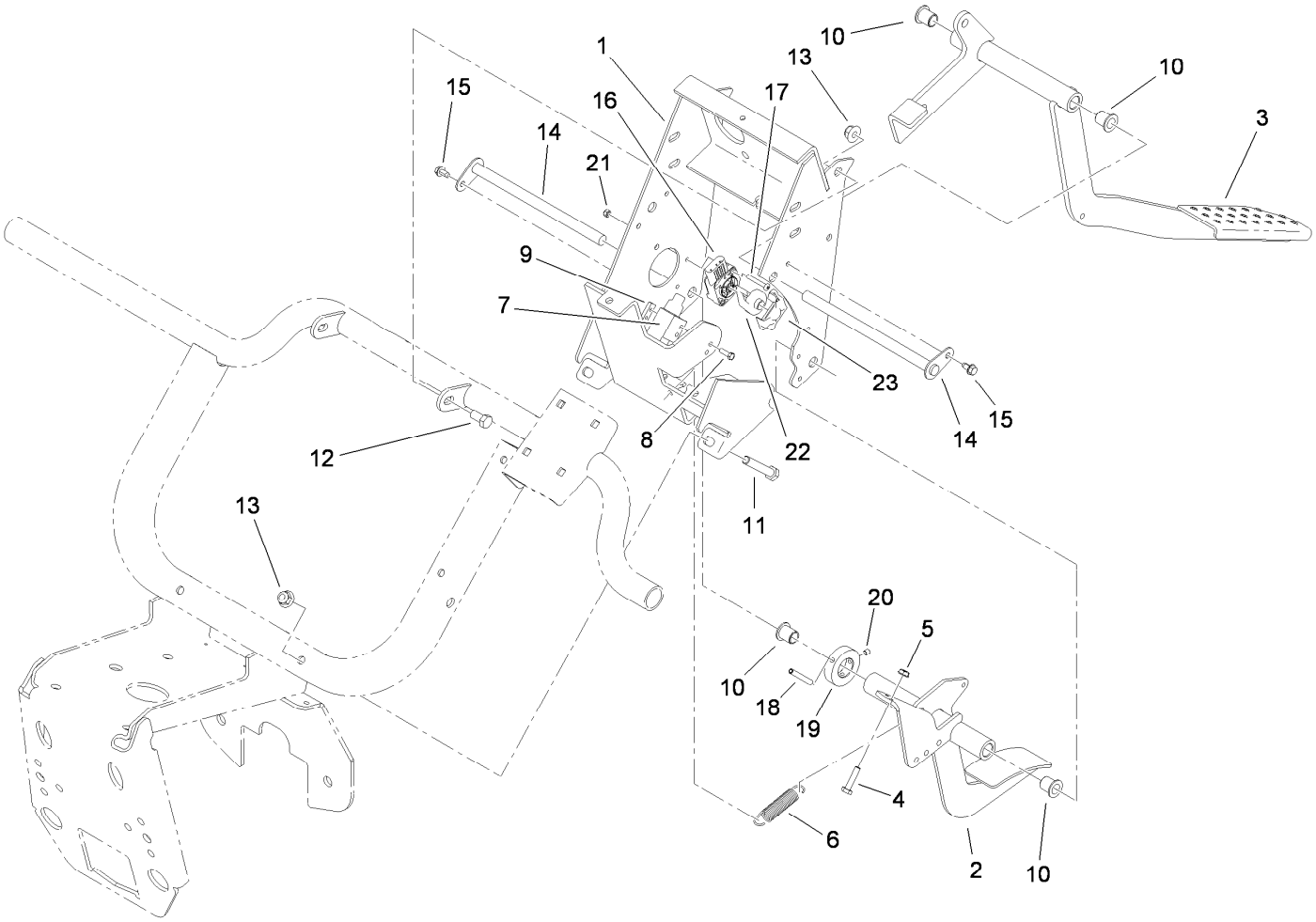


# Pedal Box Assembly

| Ref. | Part Number | Qty. | Description |
|---|---|---|---|
| 1 | 119-0748-03 | 1 | Pedal Support Frame ASM |
| 2 | 115-7630-03 | 1 | Throttle Pedal ASM |
| 3 | 112-3314-03 | 1 | Brake Pedal ASM |
| 4 | 321-7 | 2 | Screw-HH |
| 5 | 32149-2 | 2 | Nut-Keps |
| 6 | 104-6415 | 1 | Spring-Return, Pedal |
| 7 | 99-7407 | 1 | Switch |
| 8 | 3290-134 | 2 | Screw |
| 9 | 1-633181 | 1 | Plate-Tapped |
| 10 | 256-155 | 4 | Bushing-Flange |
| 11 | 323-11 | 2 | Screw-HH |
| 12 | 323-4 | 2 | Screw-HH |
| 13 | 104-8301 | 4 | Nut-Flange, NI |
| 14 | 104-7164 | 2 | Pivot-Pedal |
| 15 | 12-3270 | 2 | Screw |
| 16 | 119-0737 | 1 | Sensor-Position, Rotary |
| 17 | 104-1452 | 2 | Screw-PPH |
| 18 | 117-5071 | 1 | Pin-Roll |
| 19 | 104-7301 | 1 | Collar |
| 20 | 3245-32 | 2 | Screw-HSH |
| 21 | 3296-1 | 2 | Nut-Lock |
| 22 | 117-5059 | 1 | Pivot-Sensor, Speed |
| 23 | 117-5061 | 1 | Retainer |

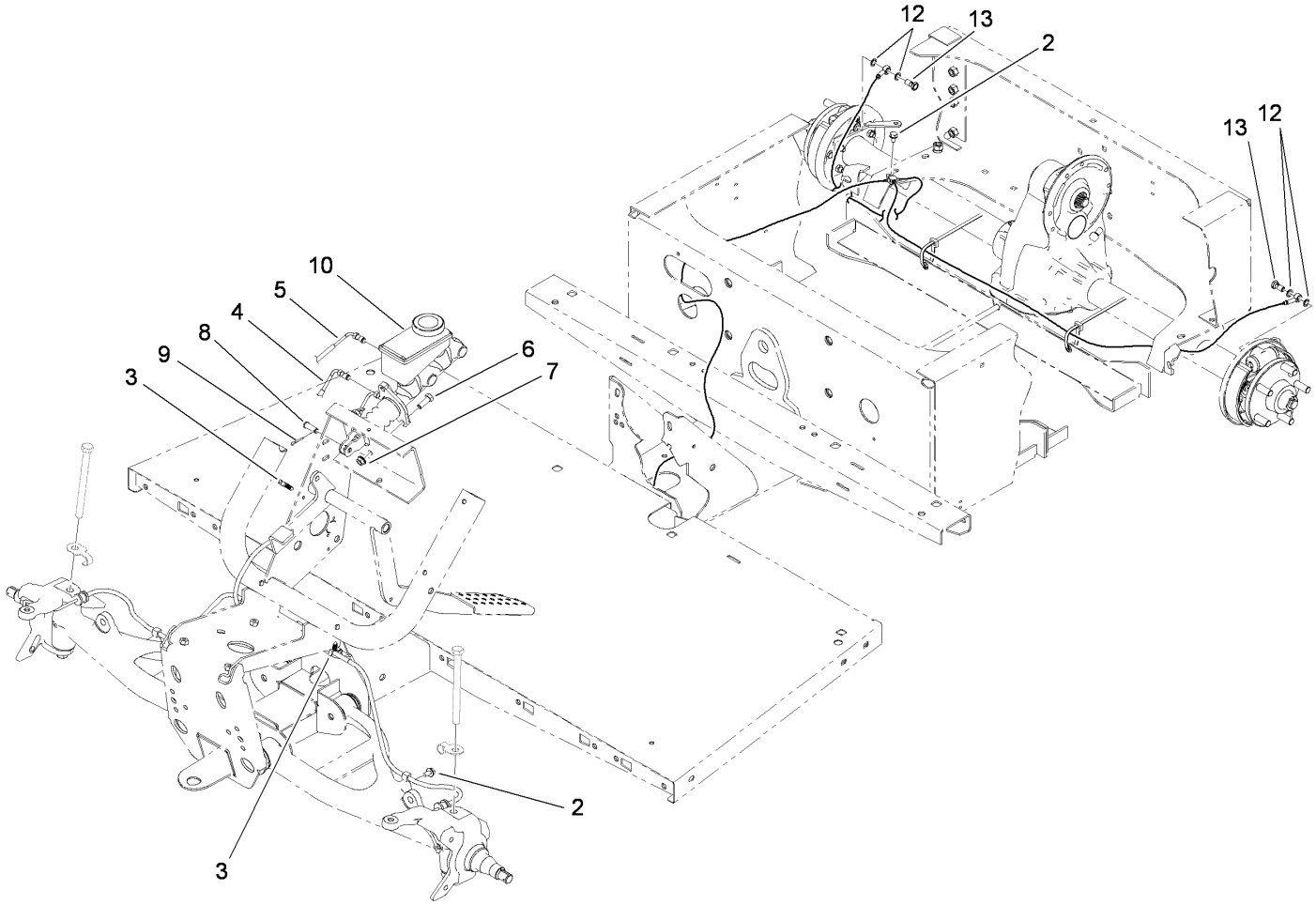


# Master Cylinder and Brake Line Assembly

| *Ref.* | *Part Number* | *Qty.* | *Description* |
|---|---|---|---|
| 2 | 32104-82 | 3 | Screw-HHF |
| 3 | 114-8324 | 4 | Clip-Line, Brake |
| 4 | 112-2925 | 1 | Front Brake Line ASM |
| 5 | 115-2409 | 1 | Rear Brake Line ASM |
| 6 | 323-6 | 2 | Screw-HH |
| 7 | 3290-357 | 2 | Nut-HHF, Whiz |
| 8 | 283-2 | 1 | Pin-Clevis |
| 9 | 3272-10 | 1 | Pin-Cotter |
| 10 | 104-6782 | 1 | Cylinder-Master |
| 12 | 115-2341 | 4 | Washer-Banjo |
| 13 | 115-2340 | 2 | Bolt-Banjo |

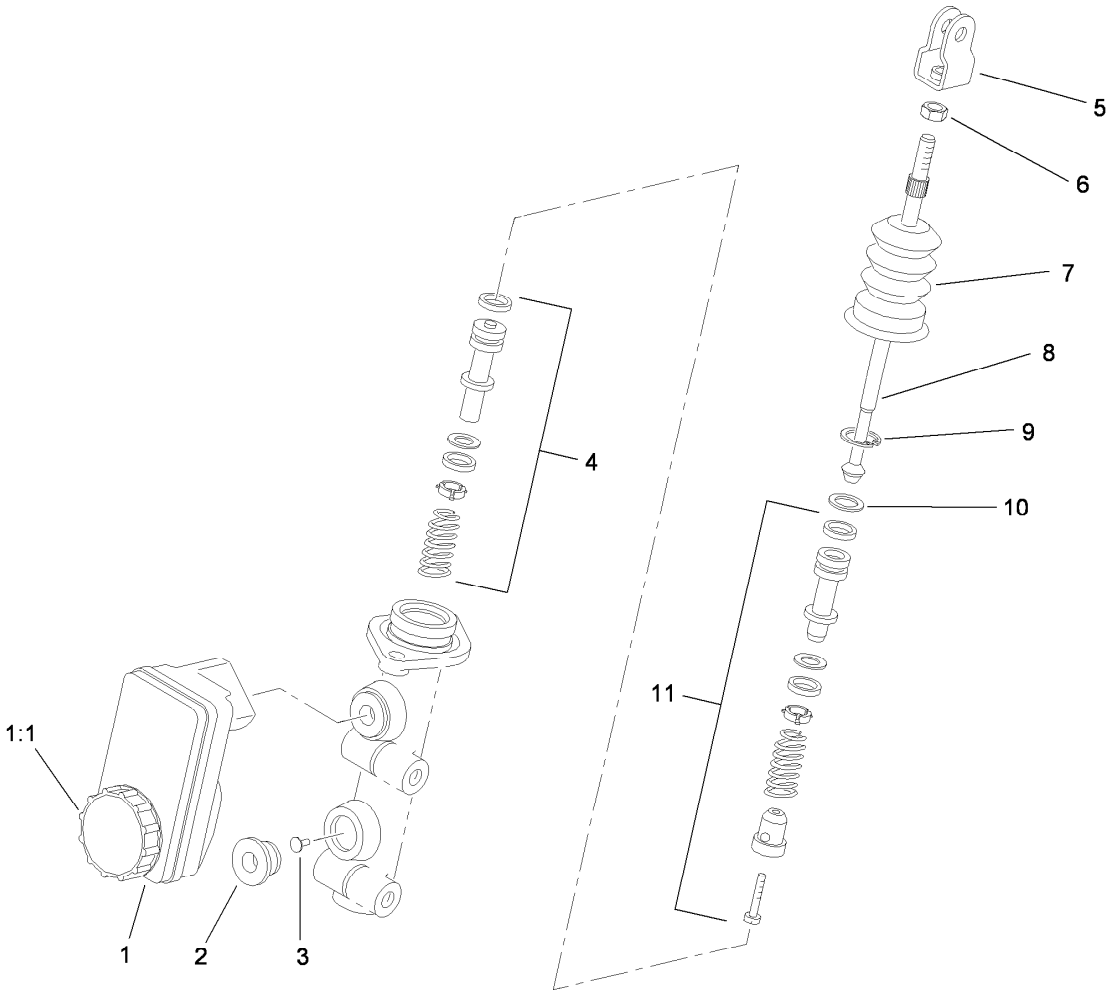


# Master Cylinder Assembly No. 104-6782

| *Ref.* | *Part Number* | *Qty.* | *Description* |
|---|---|---|---|
| 1 | 104-6845 | 1 | Reservoir ASM |
| 1:1 | 92-4112 | 1 | Cap ASM |
| 2 | 93-8971 | 2 | Seal-Port, Flange |
| 3 | 92-4103 | 1 | Pin-Stop |
| 4 | 92-4102 | 1 | Secondary Piston ASM |
| 5 | 92-4110 | 1 | Clevis |
| 6 | 21-0360 | 1 | Nut-Hex |
| 7 | 94-5209 | 1 | Cover-Dust |
| 8 | 94-5210 | 1 | Rod-Push |
| 9 | 92-4109 | 1 | Ring-Snap |
| 10 | 92-4108 | 1 | Retainer-Washer |
| 11 | 92-4101 | 1 | Primary Piston ASM |

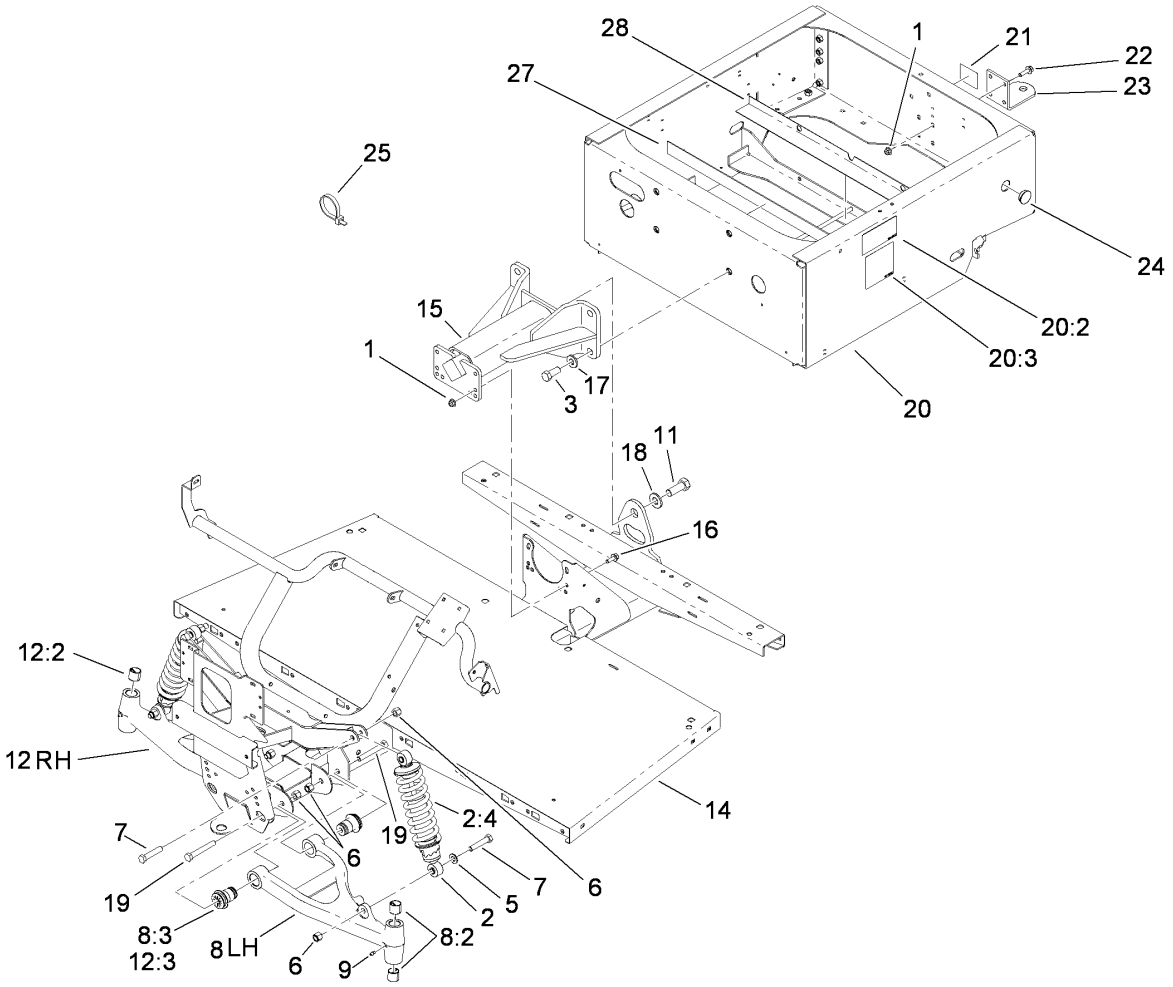


# Frame Assembly

| Ref. | Part Number | Qty. | Description |
|---|---|---|---|
| 1 | 104-8301 | 8 | Nut-Flange, NI |
| 2 | 112-2975 | 2 | Shock/Spring ASM |
| 2:4 | 112-3383 | 1 | Spring |
| 3 | 327-4 | 4 | Screw-HH |
| 5 | 51-3500 | 2 | Washer |
| 6 | 3296-23 | 8 | Nut-Lock, NI |
| 7 | 325-10 | 4 | Screw-HH |
| 8 | 114-8313 | 1 | LH A-Arm ASM |
| 8:2 | 3-0348 | 2 | Bushing |
| 8:3 | 87-1450 | 2 | Bushing-Flange |
| 9 | 302-5 | 2 | Fitting-Grease |
| 11 | 328-24 | 1 | Screw-HH |
| 12 | 114-8314 | 1 | RH A-Arm ASM |
| 12:2 | 3-0348 | 2 | Bushing |
| 12:3 | 87-1450 | 2 | Bushing-Flange |
| 14 | 112-3340-03 | 1 | Front Frame ASM |

| Ref. | Part Number | Qty. | Description |
|---|---|---|---|
| 15 | 99-7700 | 1 | Pivot Yoke ASM |
| 16 | 3234-11 | 4 | Screw-HHF |
| 17 | 99-7667 | 4 | Washer-Flat |
| 18 | 87-3060 | 1 | Washer-Hardened |
| 19 | 325-14 | 4 | Screw-HH |
| 20 | 112-3018 | 1 | Rear Frame ASM |
| 20:2 | 104-7207 | 2 | Decal-Electric |
| 20:3 | 107-0257 | 1 | Decal-Polarity |
| 21 | 99-7350 | 1 | Decal-Rating, Hitch (Light Duty) |
| 22 | 3234-24 | 4 | Screw-HHF |
| 23 | 99-7654-03 | 1 | Hitch-Duty, Light |
| 24 | 94-1402 | 1 | Plug-Hole |
| 25 | 3290-379 | 15 | Tie-Cable |
| 27 | 107-0252 | 1 | Pad-Battery |
| 28 | 107-0267 | 4 | Isolator-Battery |

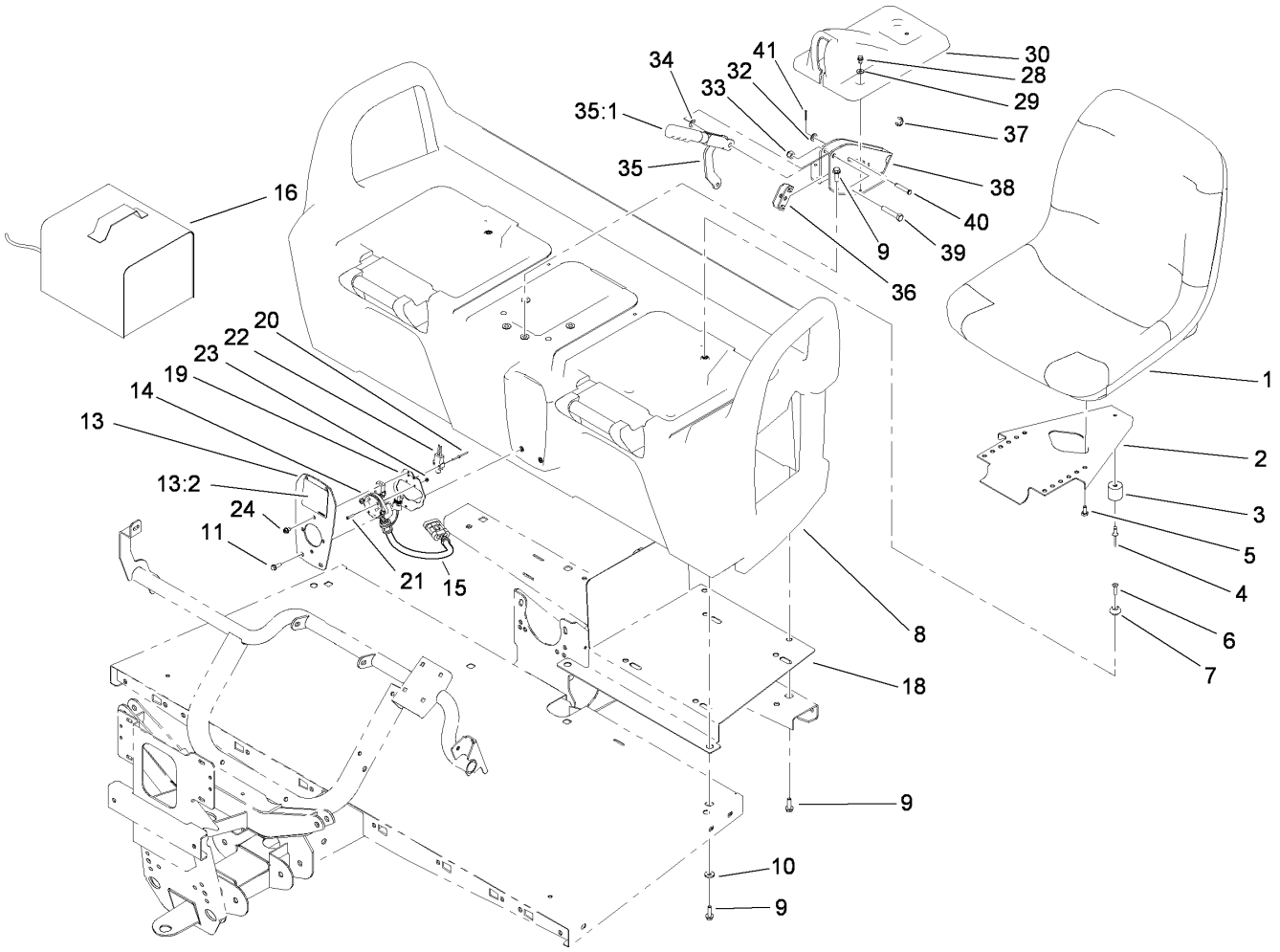


# Seat Base Assembly

| Ref. | Part Number | Qty. | Description |
|---|---|---|---|
| 1 | 112-2923 | 2 | Seat ASM |
| 2 | 99-7829 | 2 | Bracket-Seat |
| 3 | 99-7830 | 2 | Rubber Receptical ASM |
| 4 | 3290-412 | 2 | Rivet |
| 5 | 33114-016 | 8 | Screw-HH |
| 6 | 32108-5 | 2 | Screw-FH |
| 7 | 99-7833 | 2 | Post-Holding |
| 8 | 104-6847 | 1 | Seat Base ASM |
| 9 | 3234-17 | 12 | Screw-HHF |
| 10 | 88-7200 | 8 | Washer-Flat |
| 11 | 32105-15 | 4 | Screw |
| 13 | 107-0370 | 1 | Plate-Receptacle |
| 13:2 | 107-0295 | 1 | Decal-Charger |
| 14 | 107-0288 | 1 | Receptacle-Charger |
| 15 | 115-1913 | 1 | Harness-Wire, Charger |
| 16 | 112-3072 | 1 | Charger-48V T145, Offboard |
| 18 | 107-0359-03 | 1 | Tray-Seatbase |
| 19 | 107-0716 | 1 | Bracket-Mount, Socket |

| Ref. | Part Number | Qty. | Description |
|---|---|---|---|
| 20 | 107-0333 | 2 | Rivet-Pop |
| 21 | 107-0334 | 2 | Screw-HSH |
| 22 | 99-3410 | 1 | Switch |
| 23 | 3296-9 | 2 | Nut-Lock |
| 24 | 32104-17 | 4 | Screw-HWH |
| 28 | 12-3270 | 2 | Screw |
| 29 | 3256-1 | 2 | Washer-Flat |
| 30 | 104-7014 | 1 | Cover-Brake, Parking |
| 32 | 3256-23 | 1 | Washer-Flat |
| 33 | 3296-39 | 1 | Nut-Lock, NI |
| 34 | 3290-477 | 1 | Washer-Curved |
| 35 | 104-6842 | 1 | Lever-Brake, Park |
| 35:1 | 106-7972 | 1 | Grip-Handle |
| 36 | 87-3480 | 1 | Bracket-Equalizer, Cable |
| 37 | 32120-47 | 2 | Ring-Retaining, External |
| 38 | 104-6844-03 | 1 | Support-Brake, Park |
| 39 | 323-10 | 1 | Screw-HH |
| 40 | 94-3829 | 1 | Pin-Clevis |
| 41 | 3272-6 | 1 | Pin-Cotter |

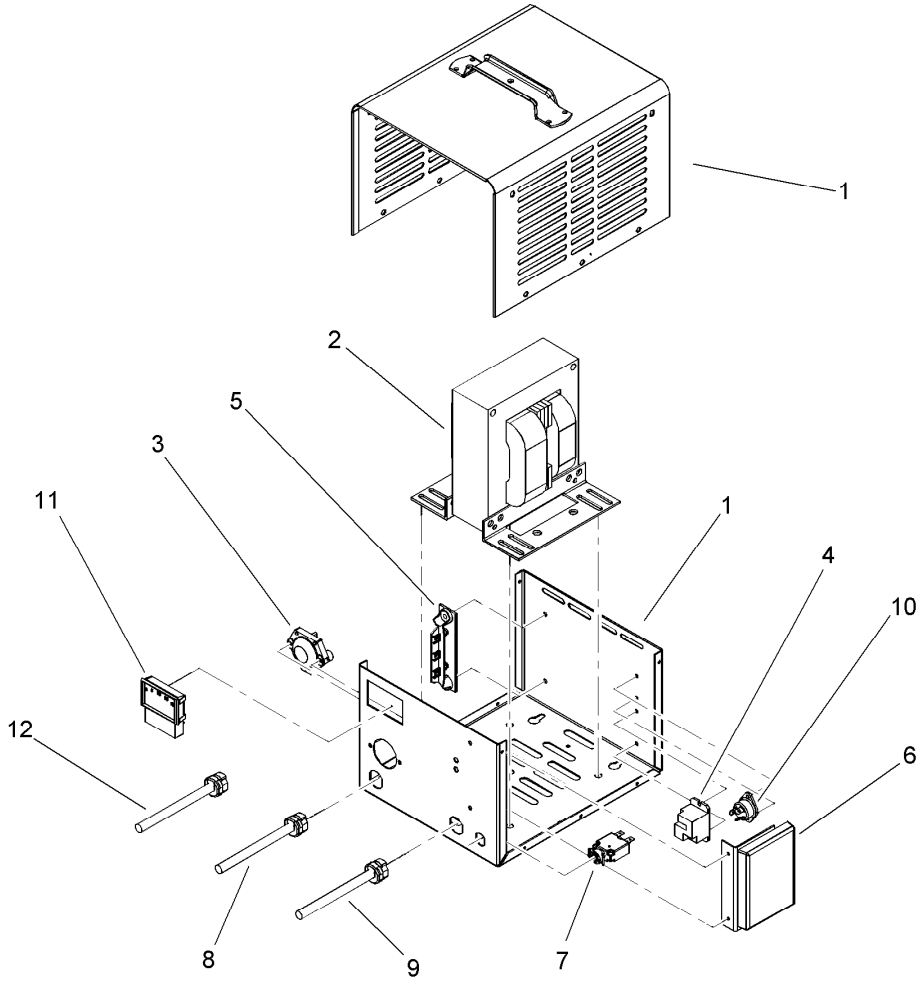


# Offboard 48 Volt Charger Assembly No. 112-3072

| *Ref.* | *Part Number* | *Qty.* | *Description* |
|---|---|---|---|
| 1 | | 1 | Case ASM ● |
| 2 | | 1 | Transformer ASM ● |
| 3 | 108-1161 | 1 | Fuse ASM |
| 4 | 108-1162 | 1 | Relay-48V, Dc |
| 5 | 108-1163 | 1 | Diode ASM |
| 6 | 112-3073 | 1 | Control Board ASM |
| 7 | 110-2579 | 1 | Breaker-Circuit |
| 8 | 108-1166 | 1 | Kit-Cordset, 8.5 Foot (Dc) |
| 9 | 108-1167 | 1 | Kit-Cordset, 72 Inch (Ac) Us |
| 10 | 108-1168 | 1 | Terminal And Screw ASM |
| 11 | 108-1169 | 1 | Ammeter |
| 12 | 108-3071 | 1 | Kit-Cordset, 20 Foot (Dc) |

● Not serviced separately

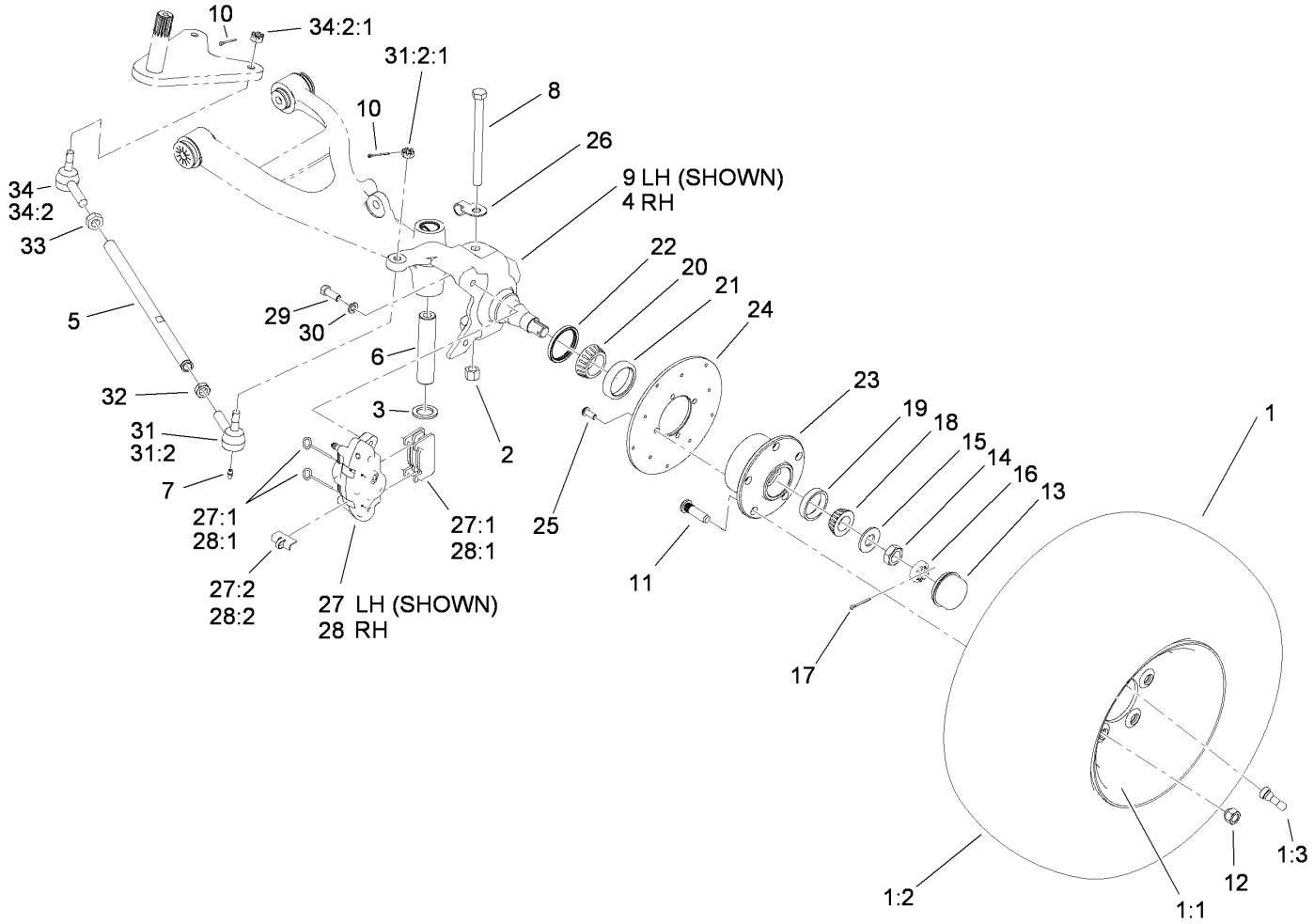


# Front Tire, Spindle and Tie Rod Assembly

| Ref. | Part Number | Qty. | Description |
|---|---|---|---|
| 1 | 104-7290 | 2 | Tire And Wheel ASM |
| 1:1 | 104-7288 | 1 | Wheel |
| 1:2 | 104-7289 | 1 | Tire |
| 1:3 | 232-27 | 1 | Stem-Valve |
| 2 | 3296-23 | 2 | Nut-Lock, NI |
| 3 | 256-115 | 2 | Washer-Thrust |
| 4 | 112-3167 | 1 | Spindle-RH |
| 5 | 115-7654 | 2 | Tie Rod |
| 6 | 99-7499 | 2 | Sleeve-Kingpin |
| 7 | 302-5 | 4 | Fitting-Grease |
| 8 | 325-20 | 2 | Screw-HH |
| 9 | 112-3166 | 1 | Spindle-LH |
| 10 | 3272-7 | 4 | Pin-Cotter |
| 11 | 10-6830 | 10 | Stud-Type, Drive |
| 12 | 242-50 | 10 | Nut-Lug |
| 13 | 241-119 | 2 | Cap-Dust |
| 14 | 3220-7 | 2 | Nut-Jam |
| 15 | 93-0309 | 2 | Washer-Tab |
| 16 | 93-0307 | 2 | Nut-Lock, Retainer |
| 17 | 3272-12 | 2 | Pin-Cotter |
| 18 | 254-94 | 2 | Bearing-Cone, Tapered |
| 19 | 254-72 | 2 | Bearing-Cup, Tapered |
| 20 | 254-106 | 2 | Cone-Bearing, Tapered |
| 21 | 254-107 | 2 | Cup-Bearing, Tapered |
| 22 | 108-7019 | 2 | Seal-Shaft |
| 23 | 104-6809 | 2 | Hub |
| 24 | 104-6891 | 2 | Rotor |
| 25 | 3274-55 | 8 | Screw-HSBH |
| 26 | 112-3311 | 2 | Clip-Hose |
| 27 | 112-3150 | 1 | Caliper-LH |
| 27:1 | 107-0708 | 1 | Friction Pad And Pin Kit |
| 27:2 | 112-3152 | 1 | Spring-Rattle, Anti |
| 28 | 112-3151 | 1 | Caliper-RH |
| 28:1 | 107-0708 | 1 | Friction Pad And Pin Kit |
| 28:2 | 112-3152 | 1 | Spring-Rattle, Anti |
| 29 | 323-6 | 4 | Screw-HH |
| 30 | 3253-21 | 4 | Washer-Lock |
| 31 | 112771-03 | 2 | LH Ball Joint ASM |
| 31:2 | | 1 | Joint-Ball, LH ● |
| 31:2:1 | 915031 | 1 | Nut |
| 32 | 3218-21 | 2 | Nut-Jam |
| 33 | 3220-11 | 2 | Nut-Jam |
| 34 | 112772-03 | 2 | RH Ball Joint ASM |
| 34:2 | | 1 | Joint-Ball, RH ● |
| 34:2:1 | 915031 | 1 | Nut |

● Not serviced separately

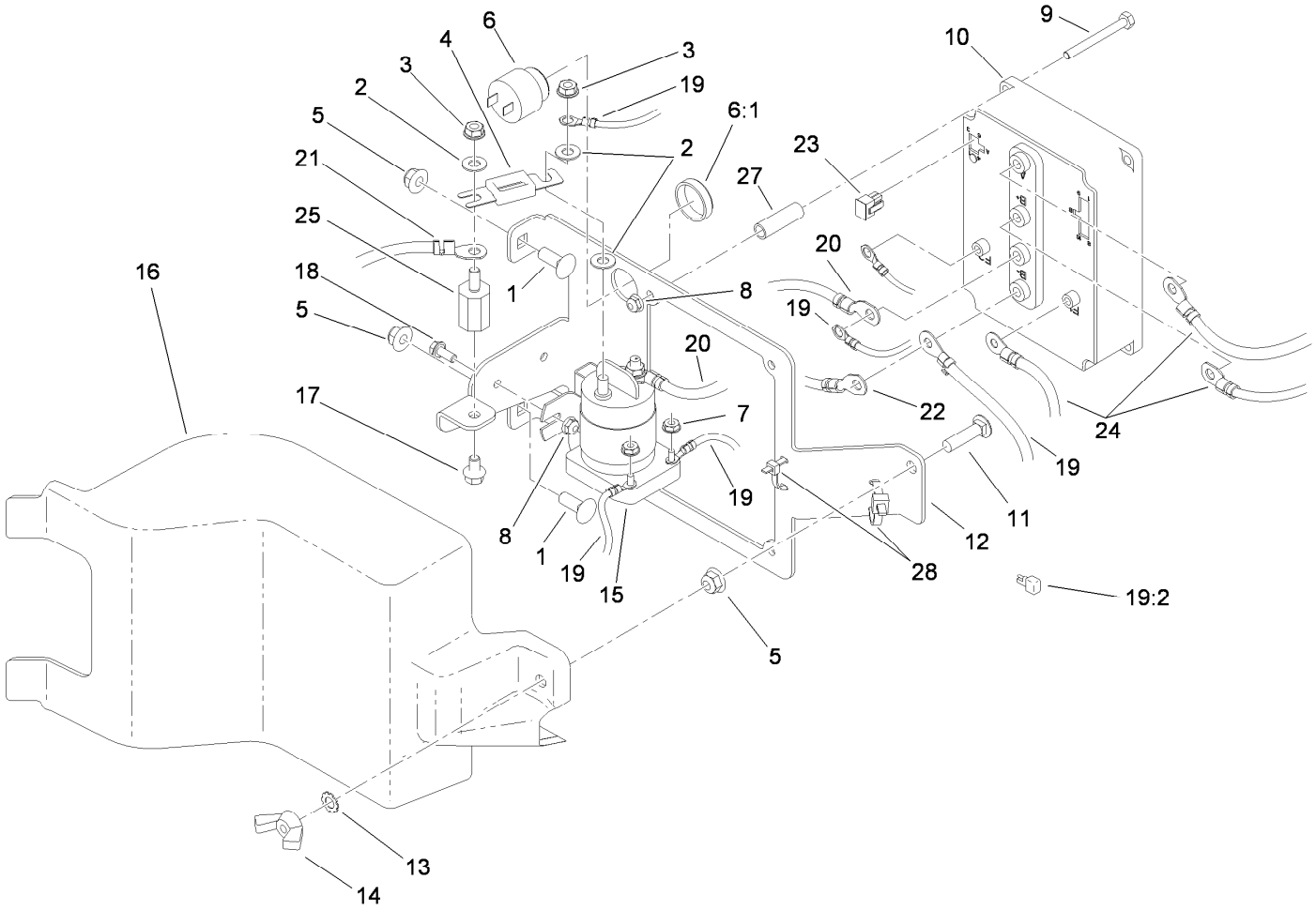


# Controller Assembly

| Ref. | Part Number | Qty. | Description |
|---|---|---|---|
| 1 | 3231-22 | 2 | Screw-CARR |
| 2 | 107-0394 | 3 | Washer-Flat |
| 3 | 107-0380 | 3 | Nut-HHF |
| 4 | 104-7320 | 1 | Fuse |
| 5 | 104-8301 | 3 | Nut-Flange, NI |
| 6 | 94-5582 | 1 | Alarm-Audio |
| 6:1 | 104-5107 | 1 | Nut-Plastic, Knurled |
| 7 | 32149-8 | 2 | Nut-Keps |
| 8 | 104-7201 | 6 | Nut-HF |
| 9 | 321-15 | 4 | Screw-HH |
| 10 | 110-2569 | 1 | Controller-Sevcon |
| 11 | 3231-4 | 1 | Screw-CARR |
| 12 | 104-7137-03 | 1 | Mount-Controler |
| 13 | 3255-9 | 1 | Washer-Lock |
| 14 | 32103-3 | 1 | Nut-Wing |
| 15 | 104-7136 | 1 | Contactor-48V |

| Ref. | Part Number | Qty. | Description |
|---|---|---|---|
| 16 | 104-7138 | 1 | Cover-Controller |
| 17 | 100-1719 | 1 | Screw-Flange |
| 18 | 3234-33 | 2 | Screw-HHF |
| 19 | 117-4700 | 1 | Harness-Wire, Mid Duty Elect |
| 19:2 | 100-4918 | 1 | Diode |
| 20 | 107-0740 | 1 | Cable-Battery, Positive |
| 21 | 107-0741 | 1 | Cable-Battery, Positive |
| 22 | 107-0742 | 1 | Cable-Battery, Negative |
| 23 | 32160-130 | 1 | Connector |
| 24 | 107-0737 | 1 | Harness-Wire, Battery Cable |
| 25 | 107-0286 | 1 | Isolator |
| 27 | 107-0285 | 4 | Spacer |
| 28 | 3290-379 | 2 | Tie-Cable |

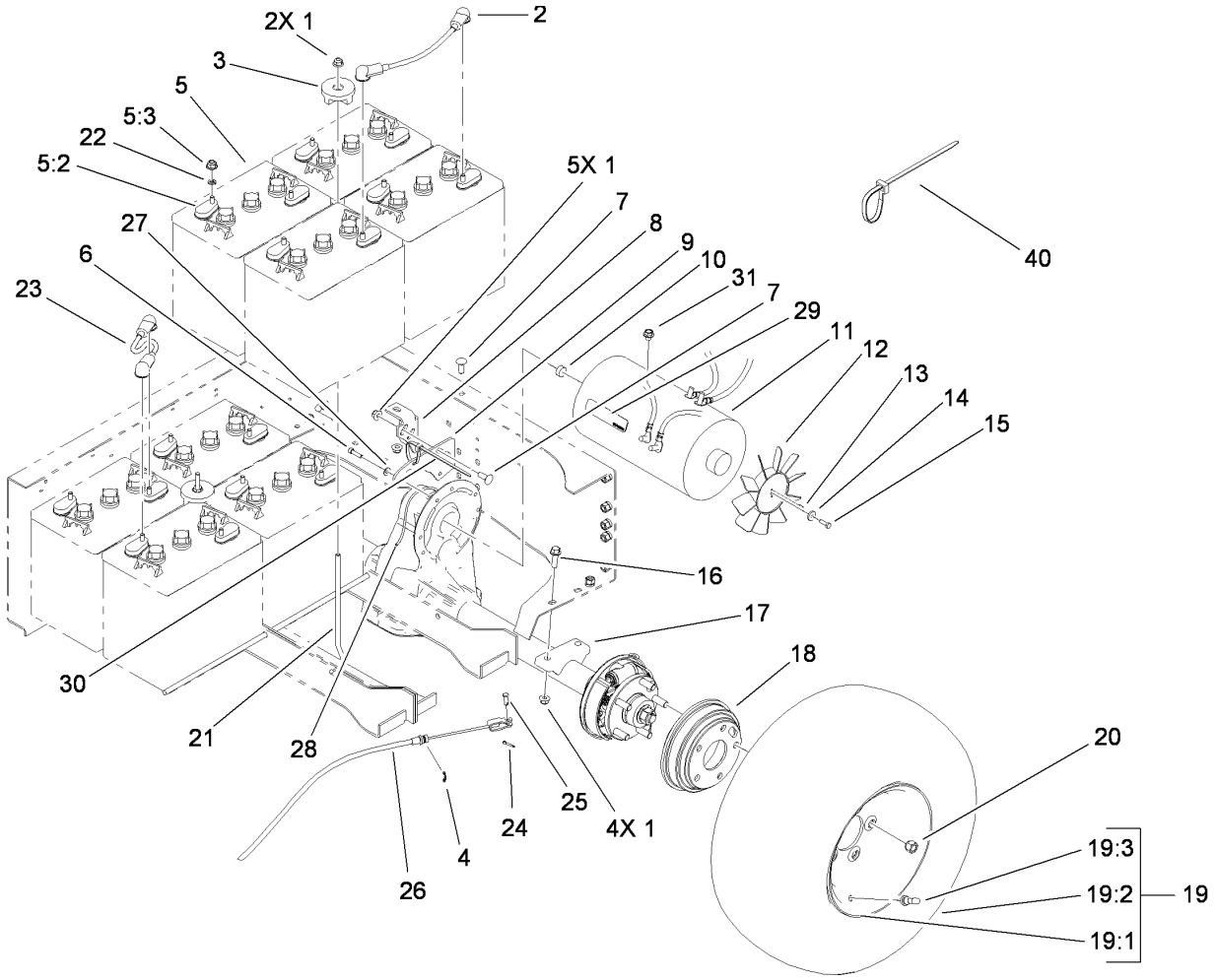


# Battery and Transaxle Assembly

| Ref. | Part Number | Qty. | Description |
|---|---|---|---|
| 1 | 104-8301 | 11 | Nut-Flange, NI |
| 2 | 107-0739 | 1 | Cable-Battery, Positive |
| 3 | 104-7149 | 2 | Hold Down ASM |
| 4 | 32120-47 | 2 | Ring-Retaining, External |
| 5 | | 8 | Battery-Trojan T145 ● |
| 5:2 | 107-0289 | 2 | Cover-Terminal, Battery |
| 5:3 | 107-0388 | 2 | Nut |
| 6 | 3274-26 | 6 | Screw-HSH ● |
| 7 | 3231-22 | 5 | Screw-CARR |
| 8 | 104-7249-03 | 1 | Bracket-Support |
| 9 | 104-7305-03 | 1 | Plate-Mount, Transaxle |
| 10 | 112-3399 | 1 | Damper-Rubber |
| 11 | 104-7335 | 1 | Motor-Electric |
| 12 | 107-0259 | 1 | Fan-10 Blade, Clockwise |
| 13 | 32121-68 | 2 | Pin-Roll |
| 14 | 73-3580 | 1 | Washer |
| 15 | 3274-8 | 1 | Screw-HSH |
| 16 | 3234-24 | 4 | Screw-HHF |
| 17 | 114-8330 | 1 | Transaxle-Electric |

| Ref. | Part Number | Qty. | Description |
|---|---|---|---|
| 18 | 104-6500 | 2 | Drum-Brake |
| 19 | 104-7290 | 2 | Tire And Wheel ASM |
| 19:1 | 104-7288 | 1 | Wheel |
| 19:2 | 104-7289 | 1 | Tire |
| 19:3 | 232-27 | 1 | Stem-Valve |
| 20 | 242-50 | 10 | Nut-Lug |
| 21 | 104-7339 | 2 | Rod-Battery |
| 22 | 107-0280 | 16 | Washer-Lock |
| 23 | 107-0738 | 6 | Cable-Battery, Positive |
| 24 | 3272-10 | 2 | Pin-Cotter |
| 25 | 283-62 | 2 | Pin-Clevis |
| 26 | 110-2647 | 2 | Cable-Brake, Park |
| 27 | 3256-22 | 6 | Washer-Flat |
| 28 | 110-1872 | 1 | Hose-Fuel |
| 29 | 107-0356 | 1 | Decal-Motor |
| 30 | 3290-379 | 12 | Tie-Cable |
| 31 | 107-0376 | 1 | Screw-HSFH |
| 40 | 3290-378 | 2 | Tie-Cable |

● Not serviced separately

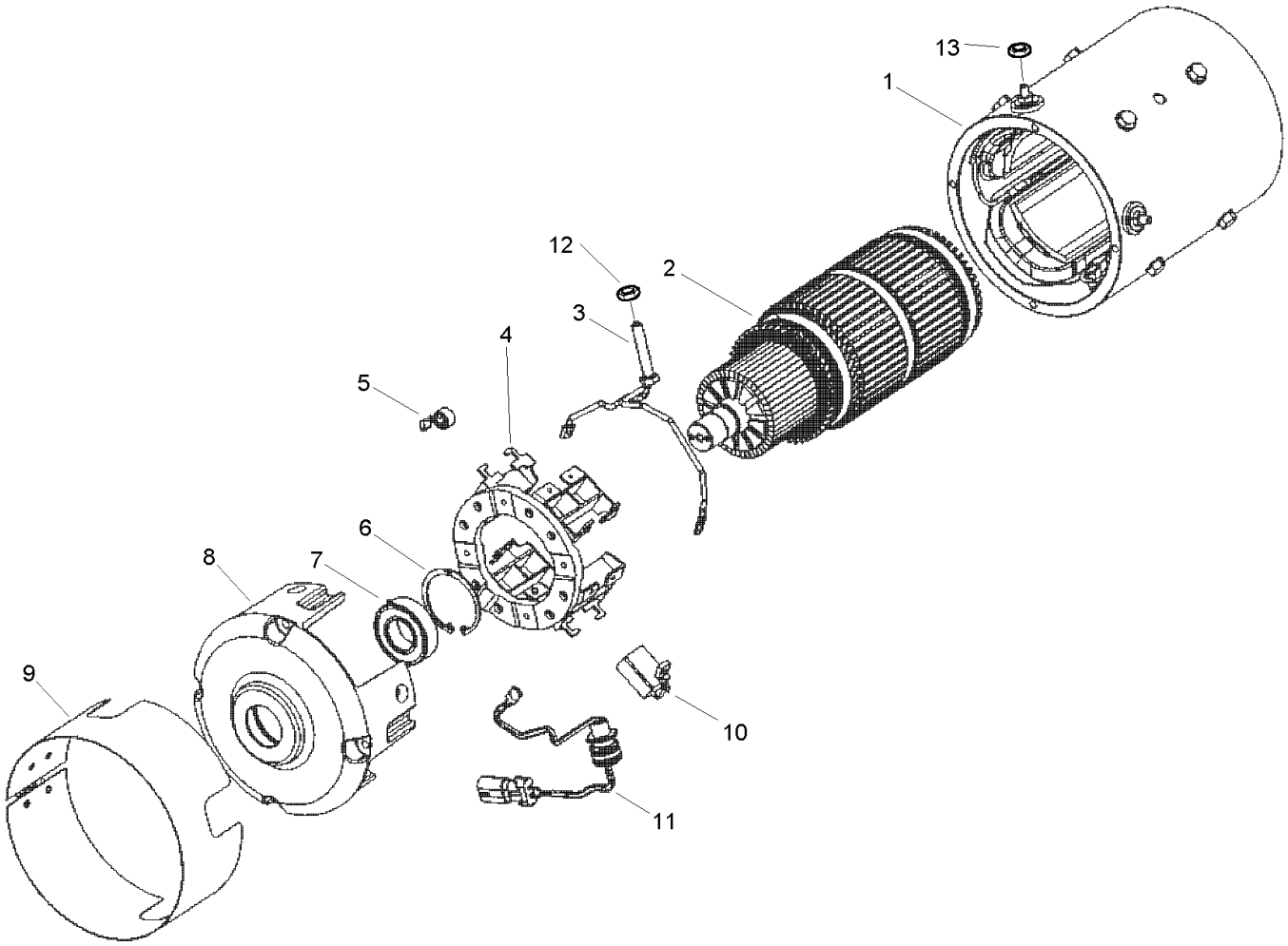


# Electric Motor Assembly No. 104-7335

| Ref. | Part Number | Qty. | Description |
|---|---|---|---|
| 1 | | 1 | Frame And Field ASM ● |
| 2 | | 1 | Armature ASM ● |
| 3 | 108-1151 | 2 | Brush Lead ASM |
| 4 | 108-1152 | 1 | Brush Box ASM |
| 5 | 108-1153 | 8 | Spring-Brush |
| 6 | 108-1154 | 1 | Ring-Retaining |
| 7 | 108-1155 | 1 | Bearing |
| 8 | 108-1156 | 1 | Head-Commutator |
| 9 | 108-1157 | 1 | Headband ASM |
| 10 | 108-1158 | 8 | Brush |
| 11 | 108-1159 | 1 | Thermal Sensor ASM |
| 12 | 3218-13 | 2 | Nut-Jam, Brass |
| 13 | 3218-14 | 2 | Nut-Jam, Brass |

● Not serviced separately

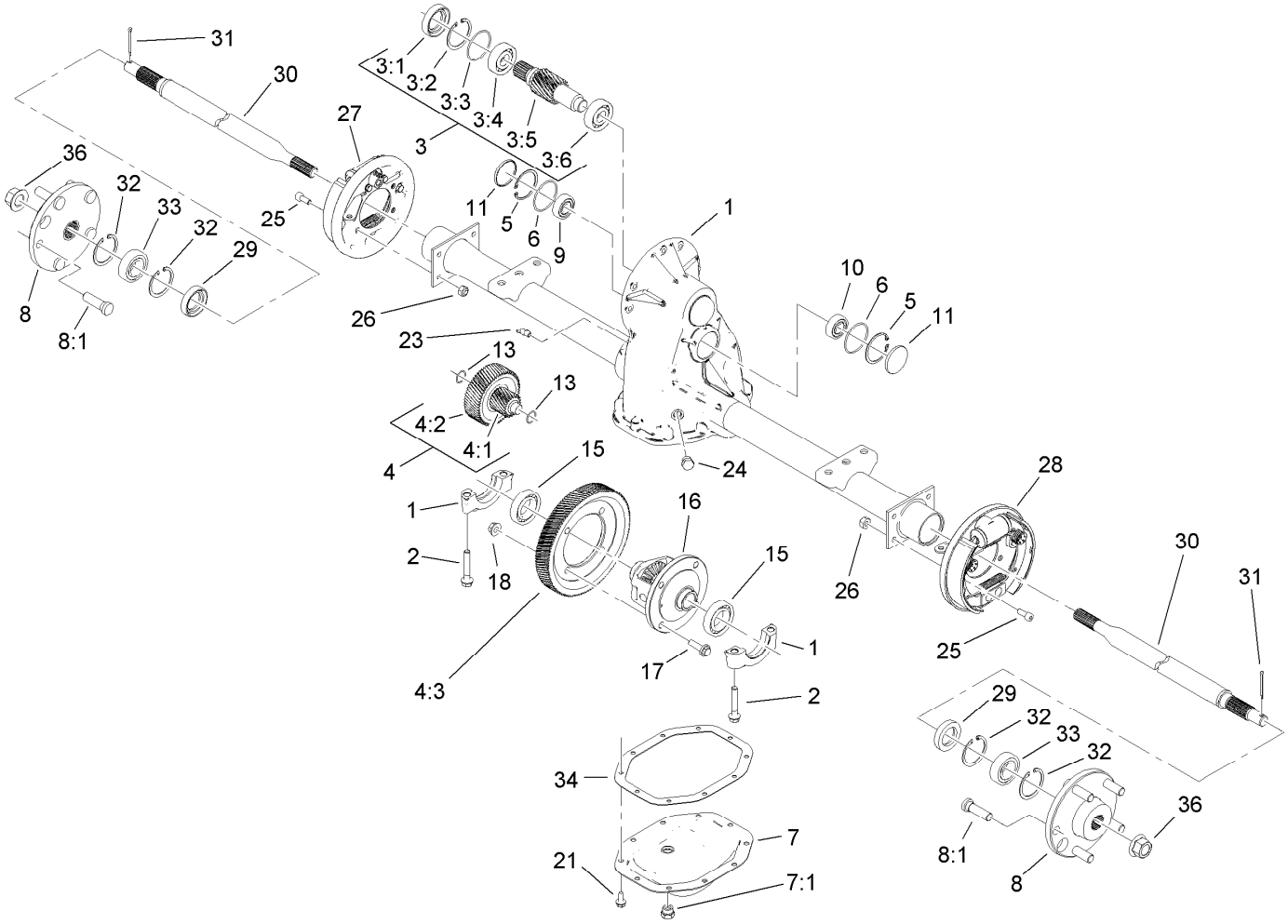


# Electric Transaxle Assembly No. 114-8330

| Ref. | Part Number | Qty. | Description |
|---|---|---|---|
| 1 | | 1 | Transaxle ASM ● |
| 2 | 108-2401 | 4 | Bolt-Cap, Bearing |
| 3 | 115-2185 | 1 | Input Shaft Kit |
| 3:1 | 108-2403 | 1 | Seal-Oil |
| 3:2 | 108-2404 | 1 | Ring-Retaining |
| 3:3 | 108-2405 | 1 | O-Ring |
| 3:4 | | 1 | Bearing-Ball ● |
| 3:5 | | 1 | Shaft-Input ● |
| 3:6 | | 1 | Bearing-Ball ● |
| 4 | 108-2409 | 1 | Internal Gear Kit |
| 4:1 | | 1 | Shaft-Input ● |
| 4:2 | | 1 | Gear-Intermediate ● |
| 4:3 | 110-2541 | 1 | Gear-Drive, Final |
| 5 | 108-2404 | 2 | Ring-Retaining |
| 6 | 108-2405 | 2 | O-Ring |
| 7 | 108-2416 | 1 | Cover Kit |
| 7:1 | 108-2415 | 1 | Plug-HH |
| 8 | 112-3136 | 2 | Hub ASM |
| 8:1 | 112-3137 | 1 | Bolt-Wheel |
| 9 | 108-2406 | 1 | Bearing-Ball |
| 10 | 108-2407 | 1 | Bearing-Ball |

| Ref. | Part Number | Qty. | Description |
|---|---|---|---|
| 11 | 108-2408 | 2 | Plug-Cap, End |
| 13 | 108-2410 | 2 | O-Ring |
| 15 | 108-2411 | 2 | Bearing-Ball |
| 16 | 112-3138 | 1 | Differential ASM |
| 17 | 108-2413 | 4 | Screw-Hex |
| 18 | 108-2414 | 4 | Nut-Lock |
| 21 | 108-2427 | 10 | Screw-Tapping |
| 23 | 108-2428 | 1 | Elbow-90 Degree |
| 24 | 108-2429 | 1 | Plug-HH |
| 25 | 112-3139 | 8 | Screw-HSH |
| 26 | 108-2418 | 8 | Nut-Lock |
| 27 | 114-8332 | 1 | LH Brake ASM |
| 28 | 114-8331 | 1 | RH Brake ASM |
| 29 | 112-3140 | 2 | Seal-Oil |
| 30 | 112-3141 | 2 | Shaft-Axle |
| 31 | 3272-12 | 2 | Pin-Cotter |
| 32 | 108-2424 | 4 | Ring-Retaining |
| 33 | 108-2425 | 2 | Bearing-Ball |
| 34 | 108-3148 | 1 | Gasket |
| 36 | 112-3142 | 2 | Nut-HF |

● Not serviced separately

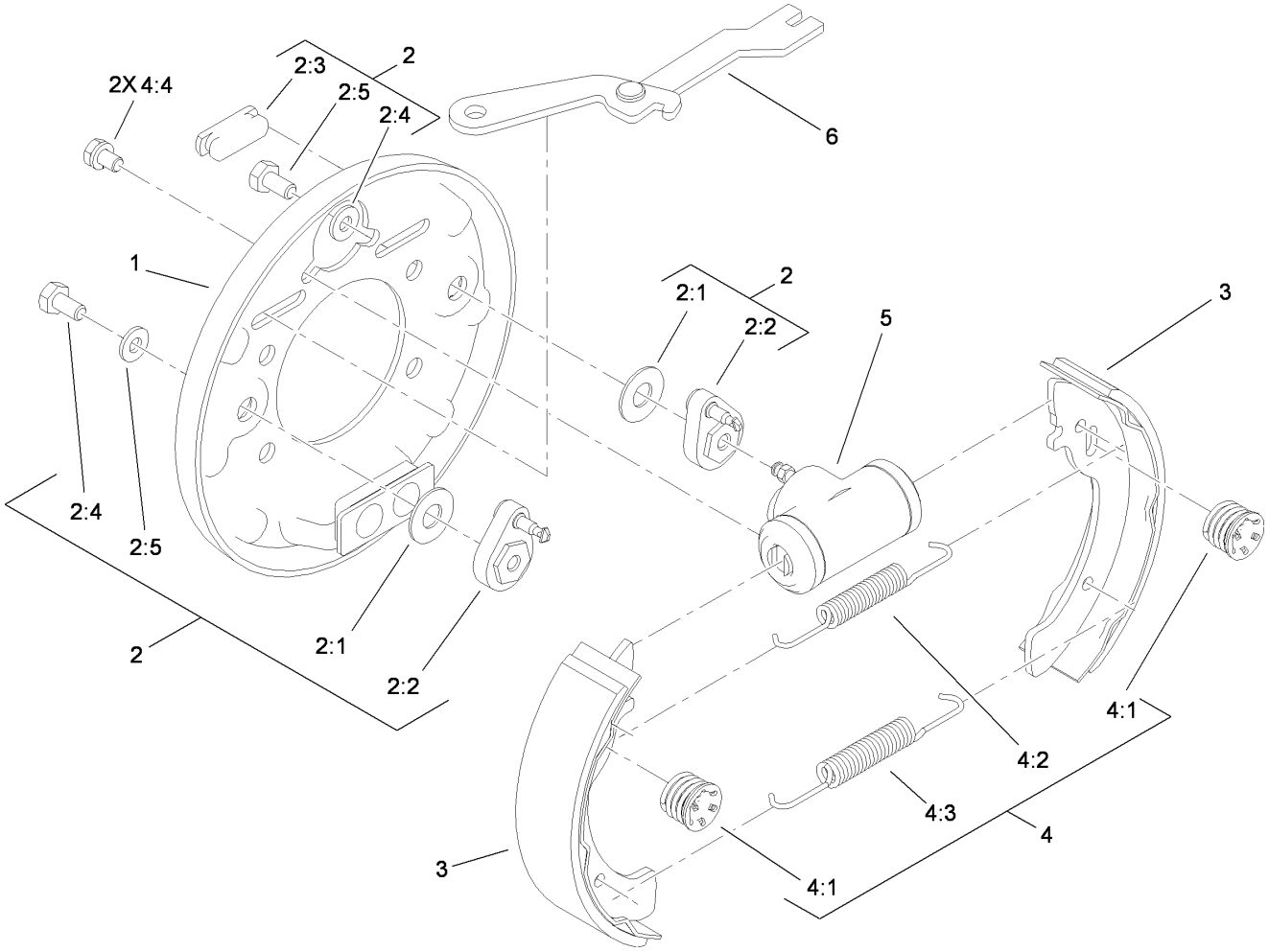


# LH Rear Brake Assembly No. 114-8332

| *Ref.* | *Part Number* | *Qty.* | *Description* |
|---|---|---|---|
| 1 | 100-8586 | 1 | Backing Plate ASM |
| 2 | 104-6820 | 1 | Adjuster Kit |
| 2:1 | 100-8585 | 2 | Washer-Bellville |
| 2:2 | 100-8588 | 2 | Adjuster Lever ASM |
| 2:3 | 100-8584 | 2 | Cover-Dust |
| 2:4 | | 2 | Washer ● |
| 2:5 | | 2 | Bolt ● |
| 3 | 104-6818 | 4 | Shoe And Lining Kit |
| 4 | 104-6819 | 1 | Hardware Kit |
| 4:1 | 100-8583 | 2 | Shoe Hold Down Spring ASM |
| 4:2 | 100-8581 | 2 | Spring-Upper |
| 4:3 | 100-8582 | 2 | Spring-Lower |
| 4:4 | | 2 | Bolt And Washer ● |
| 5 | 114-8333 | 1 | Wheel Cylinder ASM |
| 6 | 104-6825 | 1 | LH Park Brake Lever ASM |

● Not serviced separately

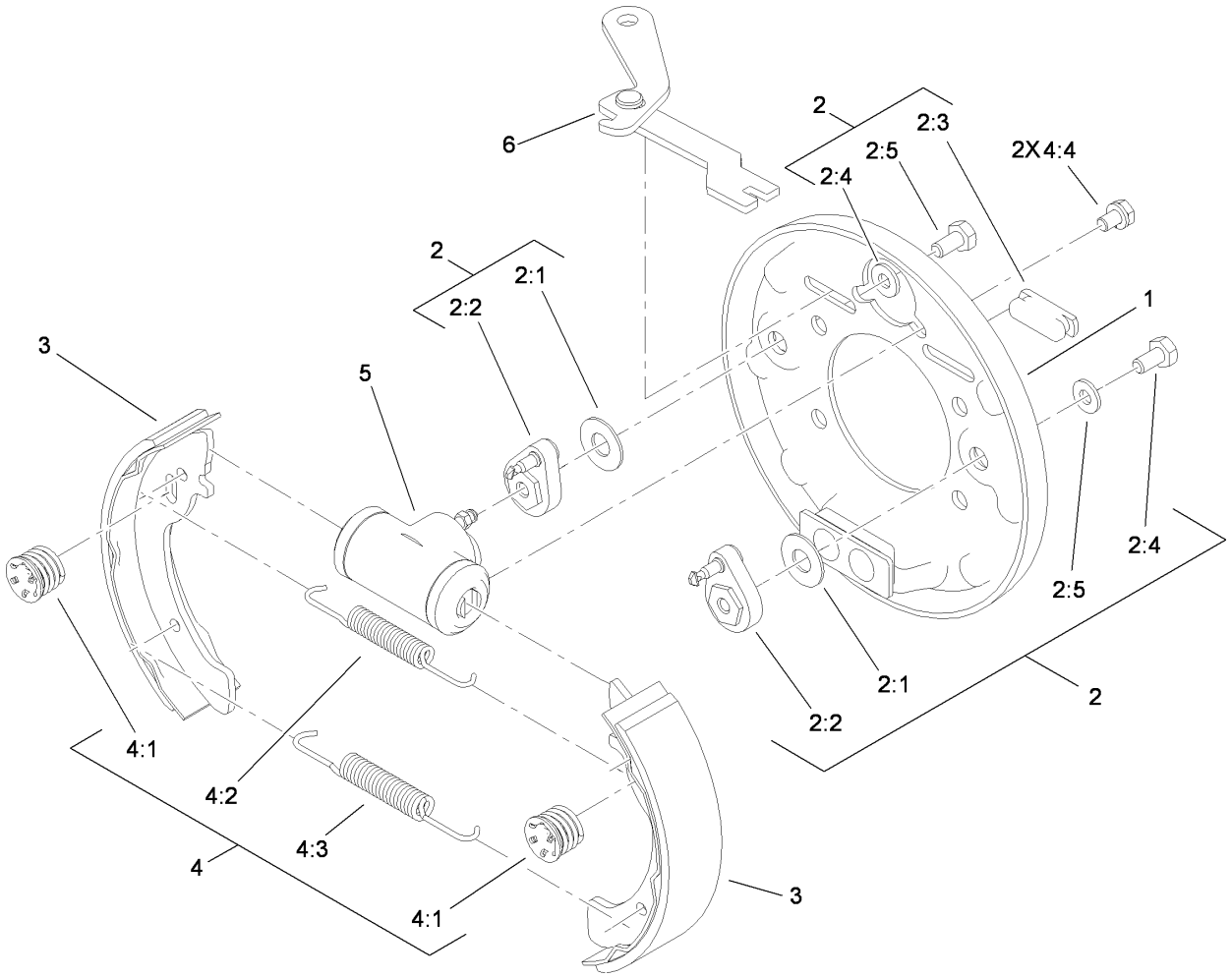


# RH Rear Brake Assembly No. 114-8331

| *Ref.* | *Part Number* | *Qty.* | *Description* |
|---|---|---|---|
| 1 | 100-8586 | 1 | Backing Plate ASM |
| 2 | 104-6820 | 1 | Adjuster Kit |
| 2:1 | 100-8585 | 2 | Washer-Bellville |
| 2:2 | 100-8588 | 2 | Adjuster Lever ASM |
| 2:3 | 100-8584 | 2 | Cover-Dust |
| 2:4 | | 2 | Washer ● |
| 2:5 | | 2 | Bolt ● |
| 3 | 104-6818 | 4 | Shoe And Lining Kit |
| 4 | 104-6819 | 1 | Hardware Kit |
| 4:1 | 100-8583 | 2 | Shoe Hold Down Spring ASM |
| 4:2 | 100-8581 | 2 | Spring-Upper |
| 4:3 | 100-8582 | 2 | Spring-Lower |
| 4:4 | | 2 | Bolt And Washer ● |
| 5 | 114-8333 | 1 | Wheel Cylinder ASM |
| 6 | 104-6826 | 1 | RH Park Brake Lever ASM |

● Not serviced separately

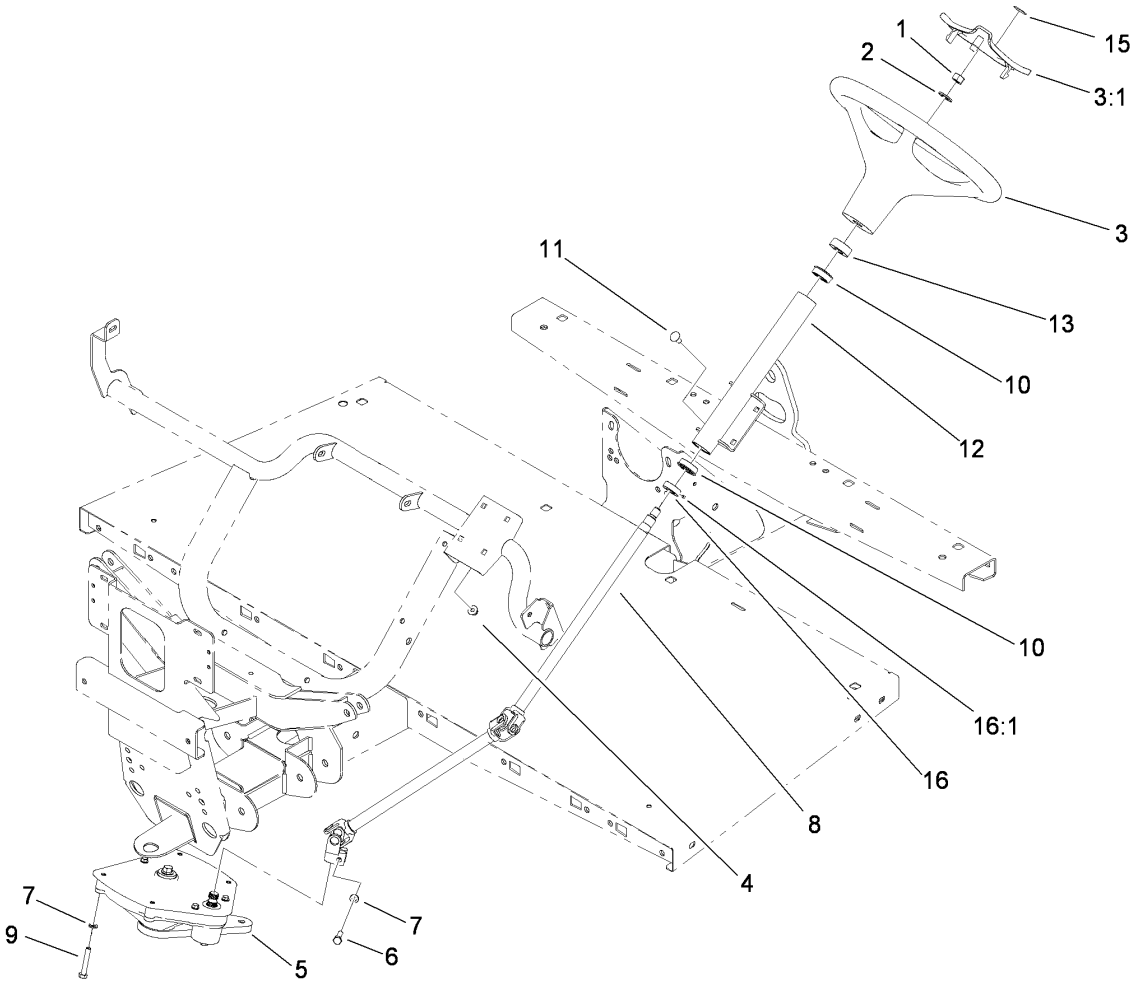


# Upper Steering Assembly

| *Ref.* | *Part Number* | *Qty.* | *Description* |
|---|---|---|---|
| 1 | 110-8815 | 1 | Nut-Hex |
| 2 | 3256-26 | 1 | Washer-Flat |
| 3 | 98-1471 | 1 | Wheel-Steering |
| 3:1 | 98-1468 | 1 | Cover-Wheel, Steering |
| 4 | 104-8300 | 4 | Nut-Flange, NI |
| 5 | 112-3130 | 1 | Steering Box ASM |
| 6 | 48-7730 | 1 | Screw-HH |
| 7 | 3253-4 | 5 | Washer-Lock |
| 8 | 112-3355 | 1 | Steering Shaft |
| 9 | 112-3305 | 4 | Screw-HH |
| 10 | 112-3262 | 2 | Bearing |
| 11 | 3230-1 | 4 | Bolt-CARR |
| 12 | 112-3264-03 | 1 | Column ASM |
| 13 | 21-9260 | 1 | Cover-Dust |
| 15 | 98-1459 | 1 | Decal |
| 16 | 111383 | 1 | Collar |
| 16:1 | 3245-32 | 1 | Screw-HSH |

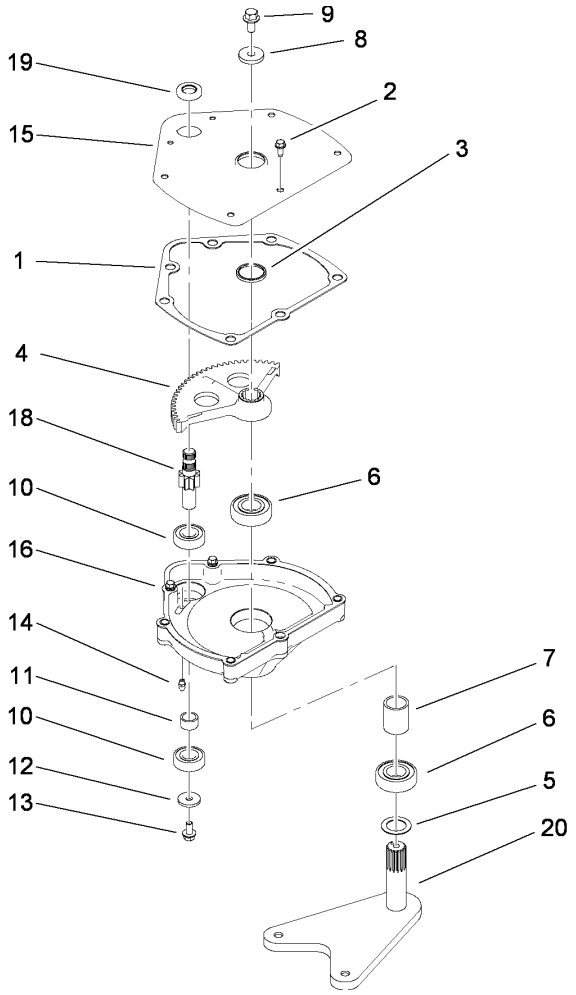


# Steering Box Assembly No. 112-3130

| *Ref.* | *Part Number* | *Qty.* | *Description* |
|---|---|---|---|
| 1 | 94-2135 | 1 | Gasket |
| 2 | 32144-10 | 3 | Screw-HWH |
| 3 | 103118 | 1 | Seal |
| 4 | 99-7843 | 1 | Sector-Gear |
| 5 | 3256-42 | 1 | Washer-Flat |
| 6 | 251-82 | 2 | Bearing-Ball |
| 7 | 112-2917 | 1 | Spacer |
| 8 | 104-6563 | 1 | Washer-Stepped |
| 9 | 104-7156 | 1 | Screw-HHF |
| 10 | 38-7820 | 2 | Bearing-Ball |
| 11 | 94-2217 | 1 | Spacer-Shaft, Input |
| 12 | 1-613235 | 1 | Washer |
| 13 | 98-3498 | 1 | Screw-HH |
| 14 | 302-5 | 1 | Fitting-Grease |
| 15 | 112-2918-03 | 1 | Cover-Housing, Steering |
| 16 | 114-8309 | 1 | Housing-Steering |
| 18 | 115-7726 | 1 | Gear-Pinion |
| 19 | 99-7657 | 1 | Seal-Oil |
| 20 | 112-3096-03 | 1 | Pitman Arm ASM |

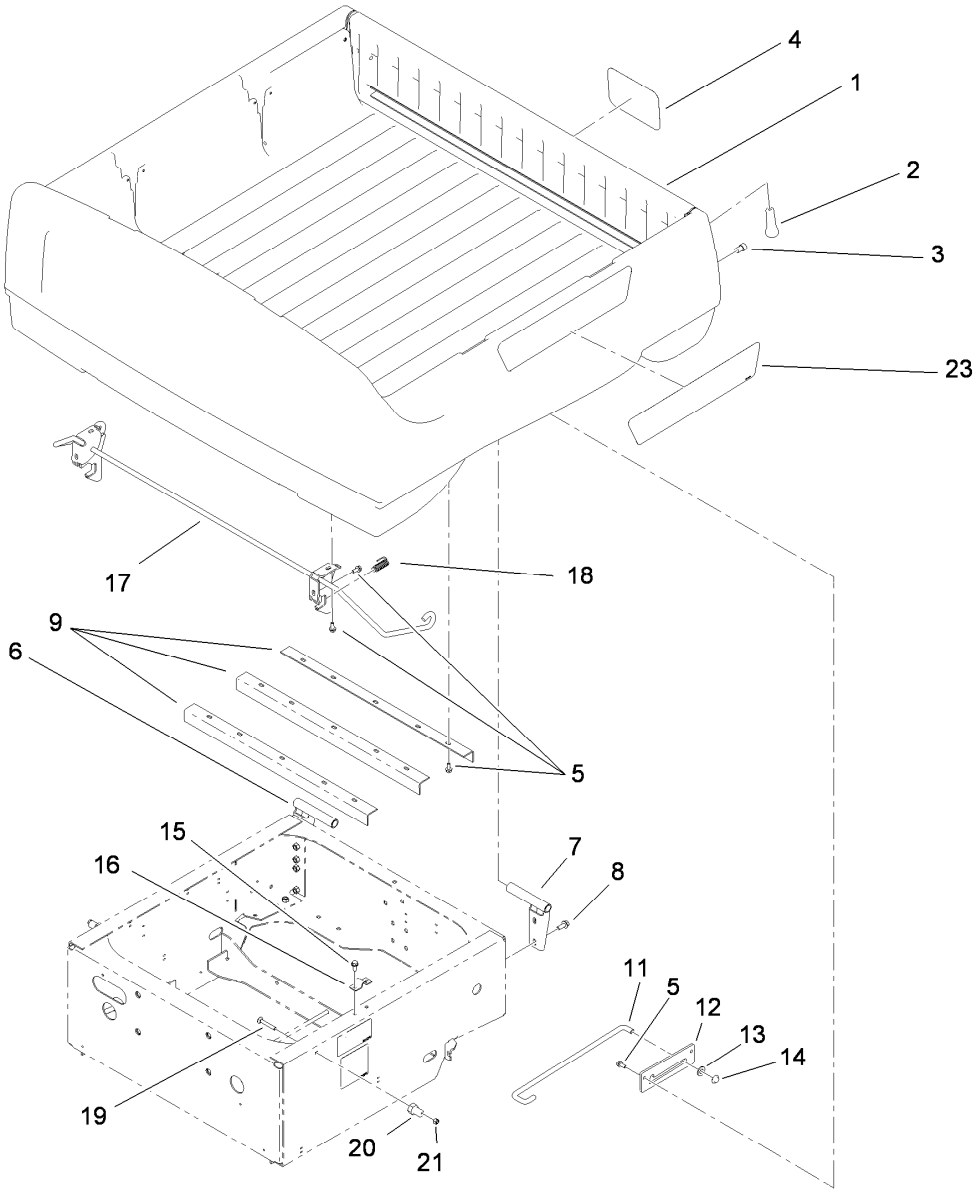


# Box and Tailgate Installation Assembly

| Ref. | Part Number | Qty. | Description |
|---|---|---|---|
| 1 | | 1 | Box And Tailgate ASM ● |
| 2 | 99-7984 | 2 | Knob-Soft Grip, Push-On |
| 3 | 115-7986 | 2 | Bumper-Rubber |
| 4 | 104-7213 | 1 | Decal |
| 5 | 3234-5 | 19 | Screw-HHF |
| 6 | 99-7309-03 | 1 | RH Pivot Bracket ASM |
| 7 | 99-7308-03 | 1 | LH Pivot Bracket ASM |
| 8 | 105-6245 | 4 | Screw-Tapping |
| 9 | 99-7864-03 | 3 | Brace-Box |
| 11 | 99-7895 | 1 | Rod-Prop |
| 12 | 99-7894 | 1 | Bracket-Rod, Prop |

| Ref. | Part Number | Qty. | Description |
|---|---|---|---|
| 13 | 3256-26 | 1 | Washer-Flat |
| 14 | 32112-14 | 1 | Nut-Push |
| 15 | 32104-32 | 2 | Screw-HWH |
| 16 | 99-7896 | 1 | Bracket-U, Prop Rod |
| 17 | 115-2385 | 1 | Rod-Latch |
| 18 | 5-7290 | 2 | Spring-Tension |
| 19 | 3230-7 | 2 | Screw-CARR |
| 20 | 104-7248 | 2 | Pin-Latch |
| 21 | 3296-29 | 2 | Nut-Lock, NI |
| 23 | 115-2415 | 2 | Decal |

● Not serviced separately

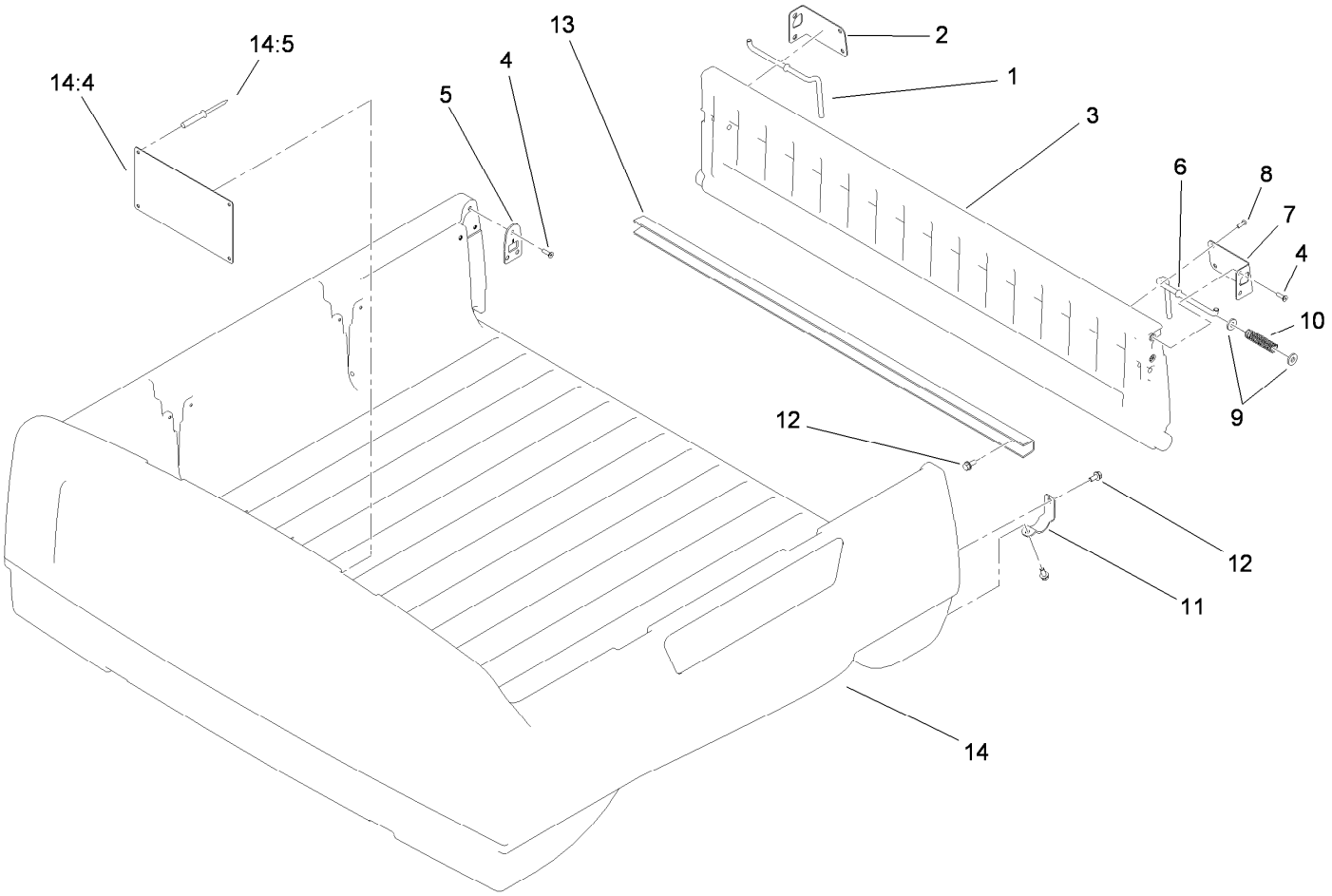


# Box and Tailgate Assembly

| Ref. | Part Number | Qty. | Description |
|---|---|---|---|
| 1 | 99-7860 | 1 | Rod-Latch, Right |
| 2 | 99-7858 | 1 | Bracket-Tailgate Latch, Right |
| 3 | 115-7640 | 1 | Tailgate ASM |
| 4 | 99-7334 | 10 | Screw |
| 5 | 114-2749 | 2 | Striker Plate |
| 6 | 99-7859 | 1 | Rod-Latch, Left |
| 7 | 99-7857 | 1 | Bracket-Tailgate Latch, Left |
| 8 | 99-7335 | 4 | Screw |

| Ref. | Part Number | Qty. | Description |
|---|---|---|---|
| 9 | 99-7861 | 4 | Washer-Latch |
| 10 | 61-8880 | 2 | Spring |
| 11 | 99-7286 | 2 | Bracket-Pivot, Tailgate |
| 12 | 3234-5 | 10 | Screw-HHF |
| 13 | 99-7867 | 1 | Channel-Tailgate |
| 14 | 115-7638 | 1 | Box ASM |
| 14:4 | 99-7954 | 1 | Decal-No Riders |
| 14:5 | 3290-415 | 4 | Rivet |

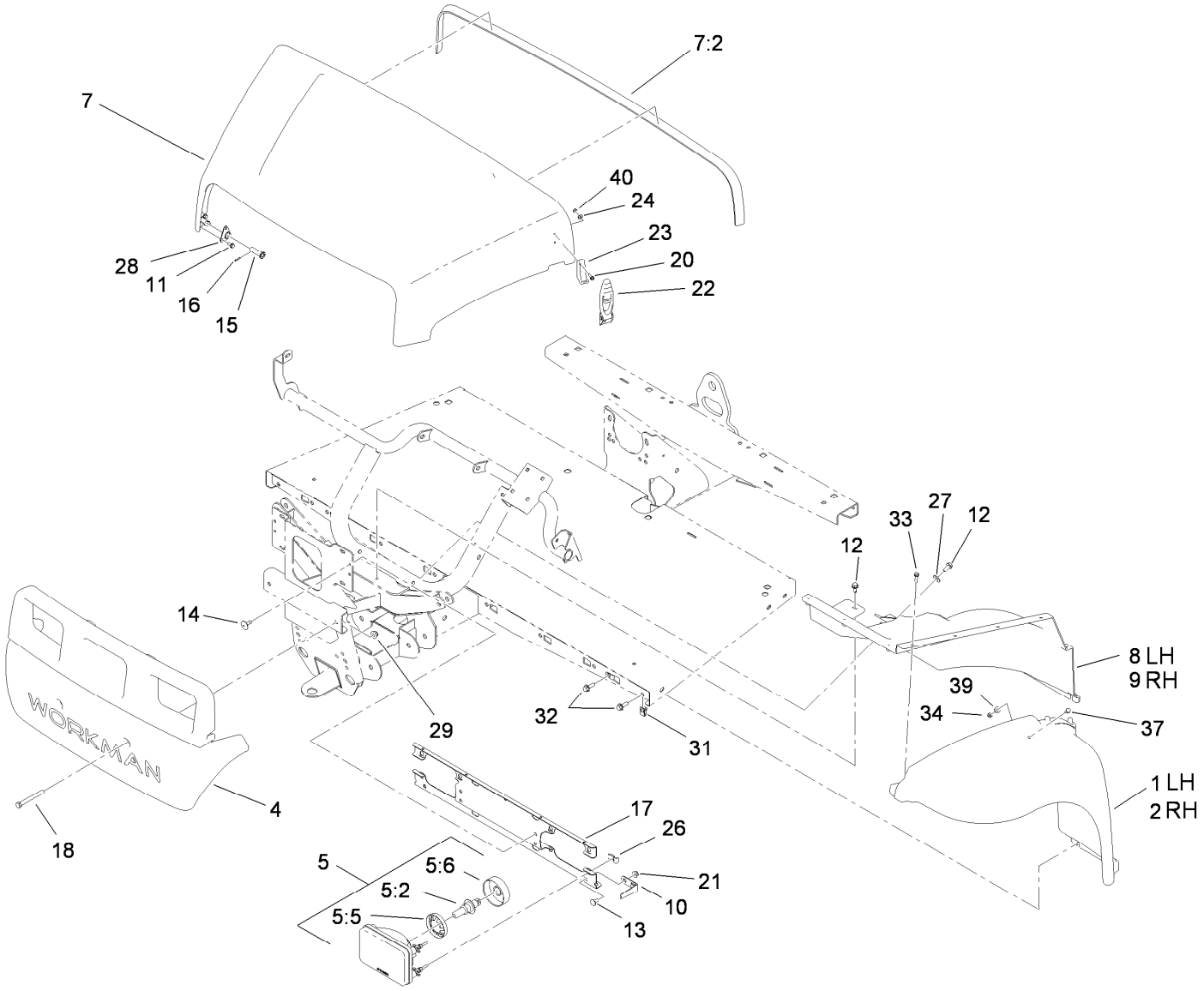


# Hood and Fender Assembly

| Ref. | Part Number | Qty. | Description |
|---|---|---|---|
| 1 | 112-3371 | 1 | Fender-LH |
| 2 | 112-3370 | 1 | Fender-RH |
| 4 | 112-3365 | 1 | Bumper |
| 5 | 115-7617 | 2 | Headlight ASM |
| 5:2 | 115-7618 | 1 | Bulb-24V |
| 5:5 | 115-7667 | 1 | Retainer-Headlight |
| 5:6 | 115-7668 | 1 | Boot-Headlight |
| 7 | 115-7636 | 1 | Hood ASM |
| 7:2 | 115-7635 | 1 | Seal-Foam |
| 8 | 112-3369 | 1 | Well-Fender, LH |
| 9 | 112-3368 | 1 | Well-Fender, RH |
| 10 | 112-3373 | 2 | Keeper-Pivot, Hood |
| 11 | 46-8093 | 6 | Screw-Plastite |
| 12 | 32104-32 | 4 | Screw-HWH |
| 13 | 3230-18 | 2 | Screw-CARR |
| 14 | 146489 | 4 | Rivet |
| 15 | 117-5094 | 2 | Pin-Clevis |
| 16 | 32121-50 | 2 | Pin-Spring |

| Ref. | Part Number | Qty. | Description |
|---|---|---|---|
| 17 | 119-0841-03 | 1 | Bracket-Headlight |
| 18 | 115-7660 | 2 | Screw-HHF |
| 20 | 32105-13 | 4 | Screw-HWH |
| 21 | 32128-20 | 2 | Nut-HF |
| 22 | 115-2416 | 2 | Latch-Rubber |
| 23 | 103-2897 | 2 | Latch-Catch |
| 24 | 3256-14 | 4 | Washer-Flat |
| 26 | 115-2408 | 6 | Clip-Speed |
| 27 | 3256-71 | 2 | Washer-Flat |
| 28 | 112-3308 | 2 | Retainer-Pin |
| 29 | 104-8301 | 2 | Nut-Flange, NI |
| 31 | 112-3306 | 10 | Nut |
| 32 | 3234-29 | 10 | Screw-HHF |
| 33 | 46-8091 | 20 | Screw-HWH |
| 34 | 3296-42 | 2 | Nut-Lock, NI |
| 37 | 321-39 | 2 | Screw-HH |
| 39 | 3256-22 | 2 | Washer-Flat |
| 40 | 3296-2 | 4 | Nut-Lock, NI |

# Attachments and Accessories

## For 07299 Workman MDE Utility Vehicle

| Product Name | Model/Part |
|---|---|
| Rear Lift Kit | 07261 |
| Electric Bed Lift Kit | 07263 |
| Roll-Over Protection System | 07276 |
| Receiver Hitch Kit | 07278 |
| Stake Side Kit | 07290 |
| Portable Refreshment Center | 07298 |
| Canopy Kit | 07324 |
| Solid Windshield Kit | 07325 |
| Folding Windshield Kit | 07326 |
| Snow Plow | 07327 |
| Hard Cab | 07328 |
| Heavy-Duty Bumper Kit | 07329 |
| Rear Lift Kit | 07334 |
| Vinyl Enclosure | 07337 |
| Heavy-Duty Brush Guard and Bumper Kit | 07338 |
| Sliding Window Door Kit | 07352 |
| Fixed Window Door Kit | 07353 |
| Brake and Signal Light Kit | 107-8020 |
| 20 foot Cordset Kit (DC) | 108-3071 |
| Brake and Signal Light Kit | 115-7749 |
| 48V Battery Charger | 115-7785 |
| Lift Wire Harness Kit | 115-7823 |
| Horn Kit | 115-7827 |
| Cord-AC (US/CANADA) | 119-0661 |

**Notes:**

**Notes:**

**Notes:**

TORO®

Count on it.