Form No. 3365-714 Rev A

TORO®

Count on it.

Parts Catalog

22in Recycler® Lawn Mower

Model No. 20350—Serial No. 310001317 and Up

Ordering Replacement Parts

To order replacement parts, please supply the part number, the quantity, and the description of each part desired.

Understanding Reference Numbers

Each identified part in an illustration has a reference number. The reference number for a part also appears in the parts list, along with other information about the part.

This catalog uses two special reference number formats, one to indicate parts in a service assembly and another to indicate the quantity of a given part in an illustration.

Service Assembly Reference Numbers

Parts in service assemblies have reference numbers in the form a:b. The a represents the reference number of the entire service assembly and the b represents a sequential number unique to each part within the service assembly.

For example, a wheel assembly might be identified by reference number 6, the tire by 6:1, the valve by 6:2, and the wheel by 6:3. When you order the assembly identified by reference number 6, you receive all parts identified by reference numbers 6:1,6:2, and 6:3. However, you may also order any part individually. Reference numbers of this type appear in illustration and in parts lists.

Reference Numbers Indicating Quantity

In an illustration, if a reference number indicates more than one part, the reference number has the form nX y. The n represents the quantity of the part, the X is the multiplication symbol, and the y represents the reference number.

For example, in an illustration, the reference number 2X 37 means that two of the parts identified by reference number 37 are indicated.

List of Abbreviations

AR: as required

ASM: assembly

BBC: blade brake control

BHTF: button head thread forming

CARR: carriage

CCW: counter clockwise

CW: clockwise

DEG: degrees

ECM: electronic control module

EXT: external

FH: flat head

GA: gauge

HD: heavy-duty

HF: hex flange

HH: hex head

HHF: hex head flange

HHFTF: hex head flange thread forming

HJ: hex jam

HLH: hex lag head

HOC: height-of-cut

HSBH: hex socket button head

HSFH: hex socket flat head

HSH: hex socket head

HWH: hex washer head

HWHTF: hex washer head thread forming

HYD: hydraulic

LH: left hand

NI: nylon insert

NPTF: national pipe thread fine

PFH: phillips flat head

PPH: phillips pan head

PPHTF: phillips pan head thread forming

PRH: phillips round head

PTH: phillips truss head

PTO: power-take-off

RH: right hand

ROPS: roll-over protection system

RRB: rear roller brush

SFH: slotted fillister head

SHH: slotted hex head

SHWH: slotted hex washer head

SPH: slotted pan head

SQH: square head

SRH: slotted round head

STD: standard

TAP: self tapping

TTH: torx truss head

© 2010—The Toro® Company
8111 Lyndale Avenue South
Bloomington, MN 55420

Contact us at www.Toro.com.
Printed in the USA.
All Rights Reserved

Contents

Housing Assembly 4
Rear Wheel and Height-of-Cut Assembly 5
Transmission, Front Wheel and Height-of-Cut Assembly 6
Engine and Blade Assembly 7
Handle Assembly 8
Rear Bag Assembly 9
Attachments and Accessories 10

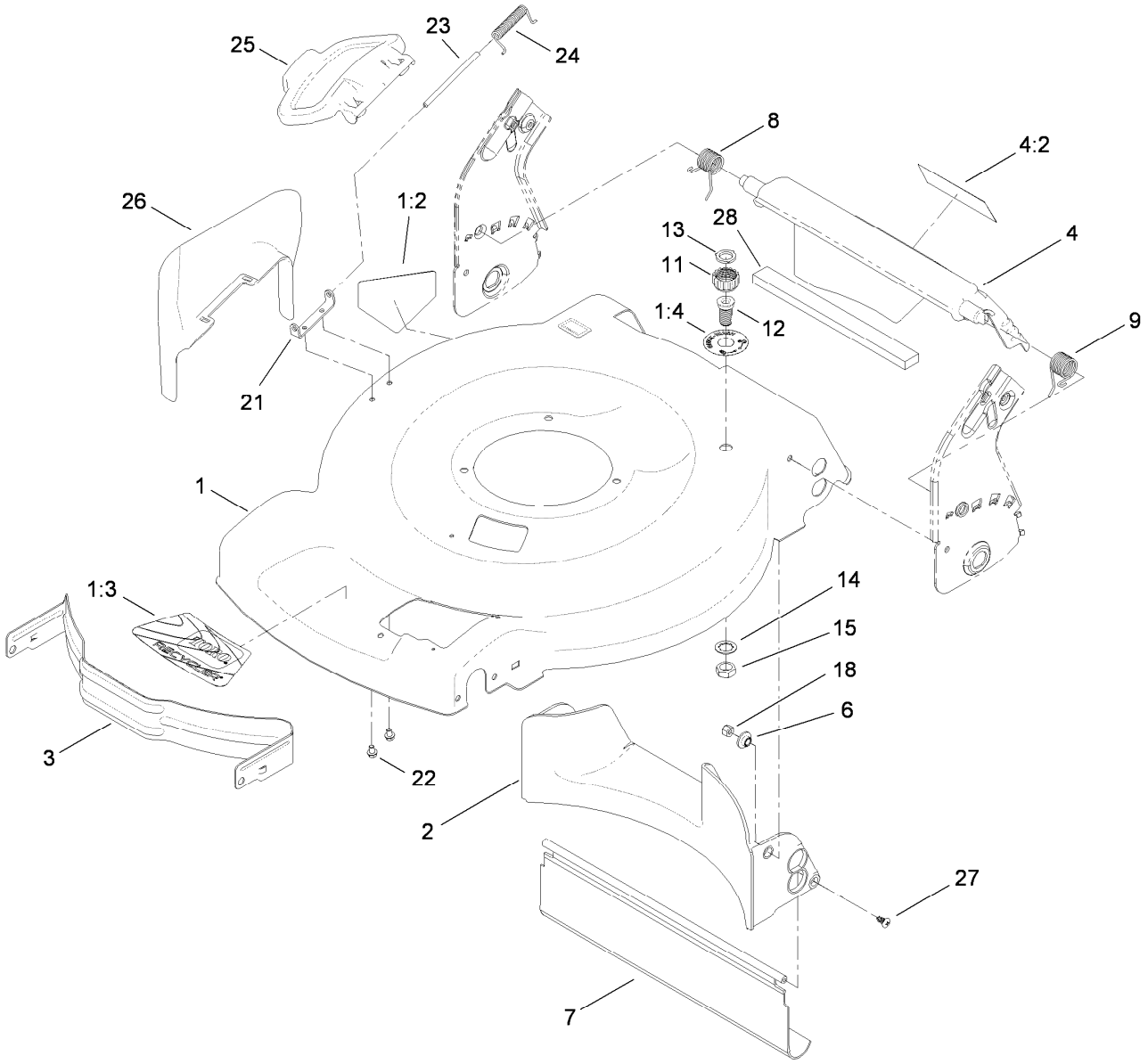

Housing Assembly

Ref.	Part Number	Qty.	Description
1	117-1085	1	Housing ASM
1:2	94-8072	1	Decal-Danger
1:3	115-4678	1	Decal-Recycler
1:4	112-8867	1	Decal-Port, Washout
2	115-1307	1	Baffle-Rear
3	114-7963-01	1	Baffle-Front
4	117-4199	1	Rear Deflector ASM
4:2	114-7982	1	Decal-Warning
6	117-5991	2	Washer-Stepped, Baffle
7	115-8420	1	Shield-Trailing
8	114-7924	1	Spring-Torsion
9	115-2859	1	Spring-Torsion
11	112-6401	1	Coupling-Hose, Washout Port
12	112-6400	1	Port-Washout
13	112-6438	1	Washer-Seal, Washout Port
14	3254-5	1	Washer-Tooth, Internal
15	3218-6	1	Nut-Jam
18	3296-29	2	Nut-Lock, NI
21	112-6416	1	Bracket-Cover
22	99-8445	2	Screw-HWH
23	99-5291	1	Rod-Cover
24	99-5293	1	Spring-Torsion
25	115-8449	1	Deflector-Side
26	115-8447	1	Chute-Discharge, Side
27	117-1092	2	Screw-PTH
28	117-5924	1	Foam-Seal

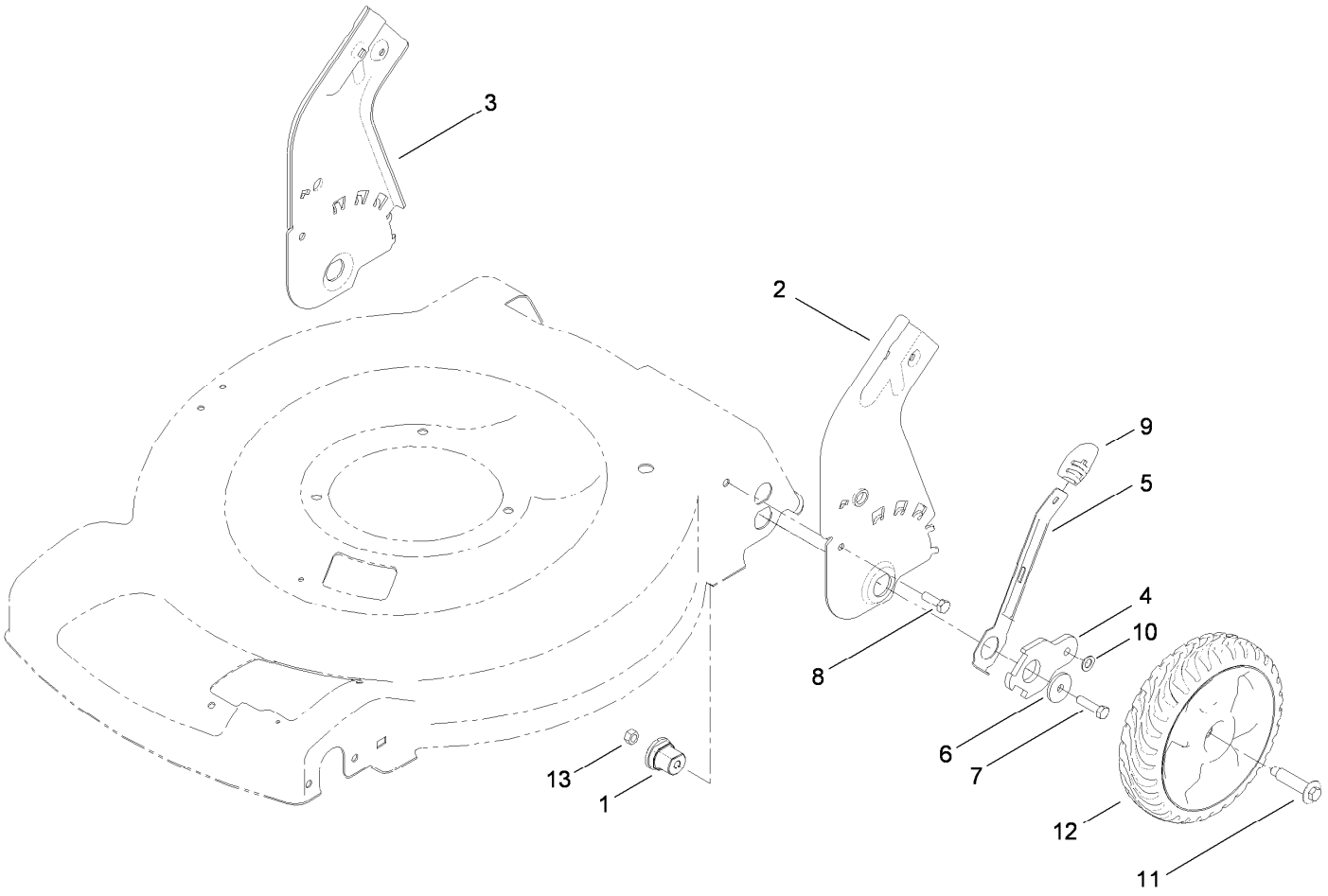

Rear Wheel and Height-of-Cut Assembly

Ref.	*Part Number*	*Qty.*	*Description*
1	115-4651	2	Bushing-Mount, HOC
2	114-7998-03	1	Plate-HOC, Rear (LH)
3	114-7999-03	1	Plate-HOC, Rear (RH)
4	114-7997	2	Arm-Pivot, Rear
5	115-2899	2	Arm-Spring, Rear (11 Inch)
6	105-3048	2	Washer-Flat
7	322-7	2	Screw-HH
8	322-5	2	Screw-HH
9	105-3042	2	Knob-Lever, HOC
10	40-1940	2	Washer
11	614650	2	Bolt-Shoulder
12	115-2877	2	8 Inch Wheel ASM
13	3296-29	2	Nut-Lock, NI

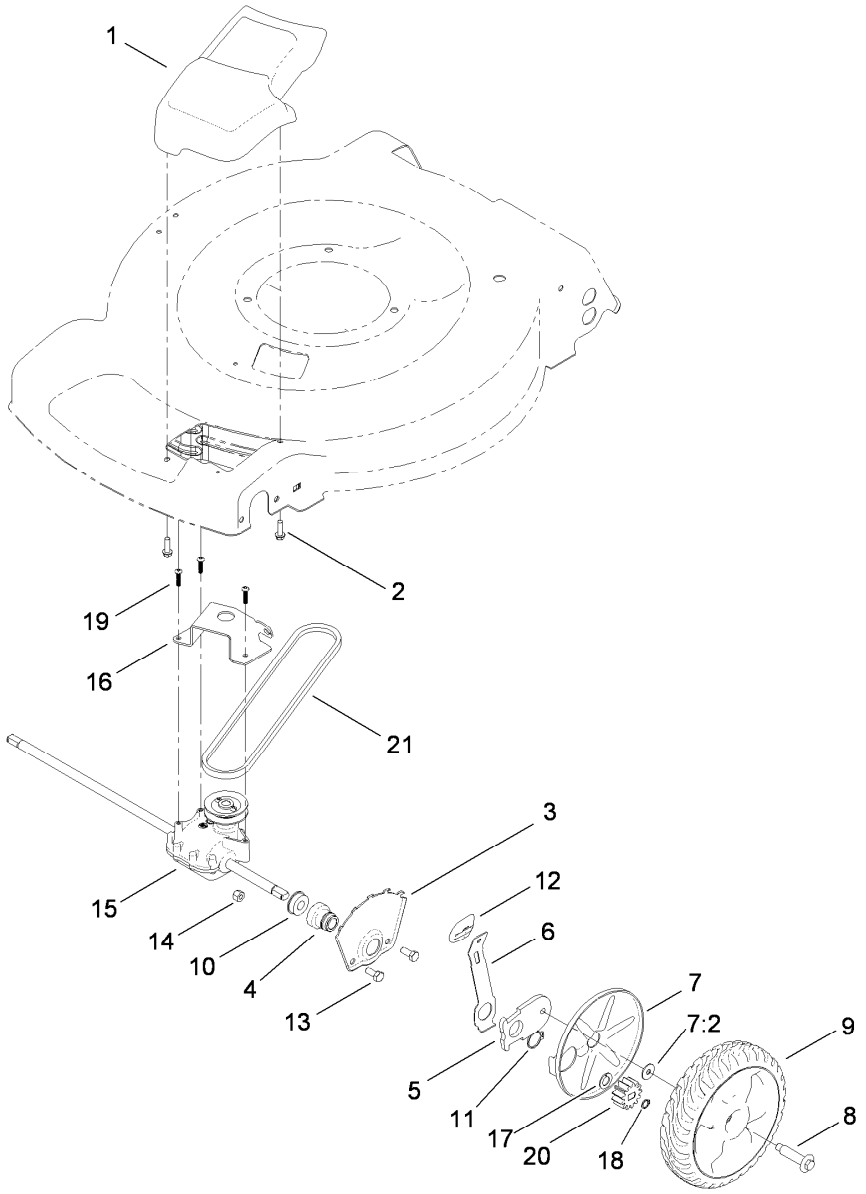

Transmission, Front Wheel and Height-of-Cut Assembly

Ref.	*Part Number*	*Qty.*	*Description*
1	115-1305	1	Cover-Belt
2	46-8091	2	Screw-HWH
3	115-1956-03	2	Plate-HOC, Front
4	104-8698	2	Retainer-Bearing, HOC
5	105-1807	2	Arm-Pivot, Front
6	105-1809	2	Arm-Spring
7	110-1792	2	Wheel Cover ASM
7:2	614426	1	Washer-Stepped
8	614650	2	Bolt-Shoulder
9	115-2878	2	8 Inch Wheel ASM
10	104-8699	2	Bearing-Ball

Ref.	*Part Number*	*Qty.*	*Description*
11	32151-36	2	Ring-Retaining
12	105-3042	2	Knob-Lever, HOC
13	322-3	4	Screw-HH
14	3296-29	4	Nut-Lock, NI
15	115-1992	1	Transmission
16	114-7978-03	1	Bracket-Transmission
17	110-7191	2	Washer-Thrust
18	32151-61	2	Ring-Retaining
19	108-7476	3	Screw-Plastite
20	115-4665	2	Gear-Pinion, 13T
21	117-1018	1	V-Belt

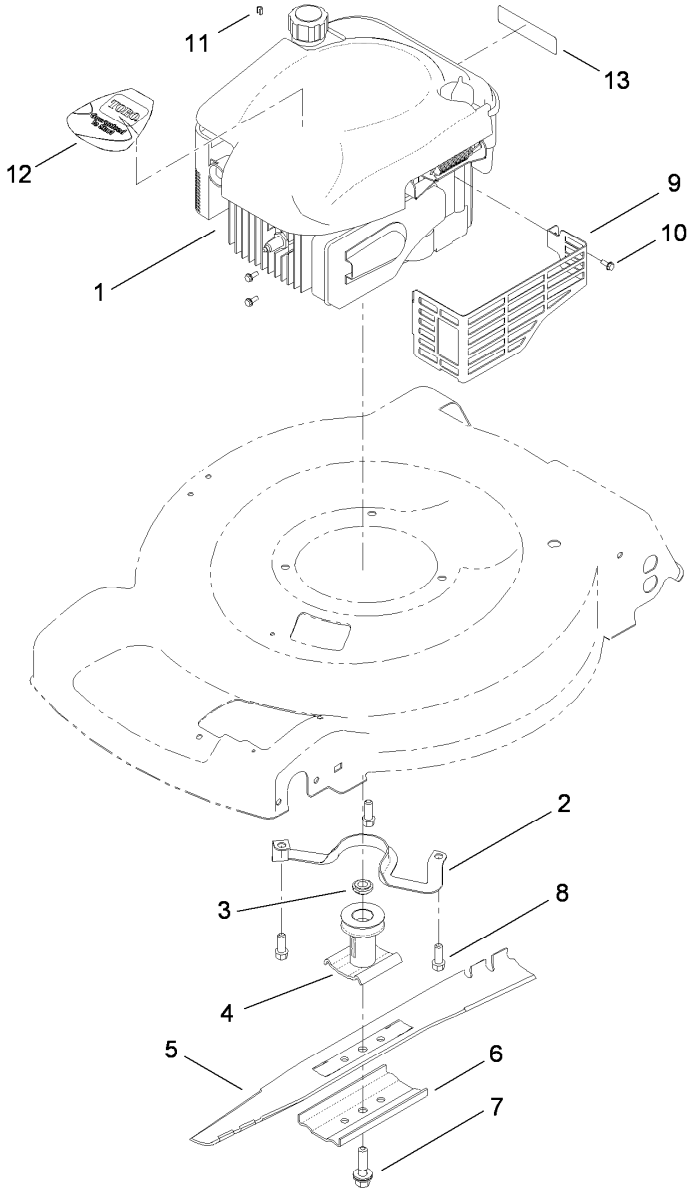

Engine and Blade Assembly

Ref.	*Part Number*	*Qty.*	*Description*
1		1	Engine-Briggs, 126L02-3126-F1 ●■
2	105-3031-03	1	Guide-Belt
3	106-3999	1	Spacer-Driver
4	106-3987	1	Blade Driver ASM
5	108-9764-03	1	Blade-22 Inch
6	108-3766-03	1	Support-Blade
7	105-8579	1	Bolt-Blade
8	95-1726	3	Screw-Taptite
9	104-7577-03	1	Shield-Muffler
10	32144-1	3	Screw-Taptite
11	2210-316	1	Stop-Rope
12	117-1017	1	Decal
13	117-2718	1	Decal-Arrester, Spark

● Not serviced separately

■ Obtain parts from www.briggsandstratton.com

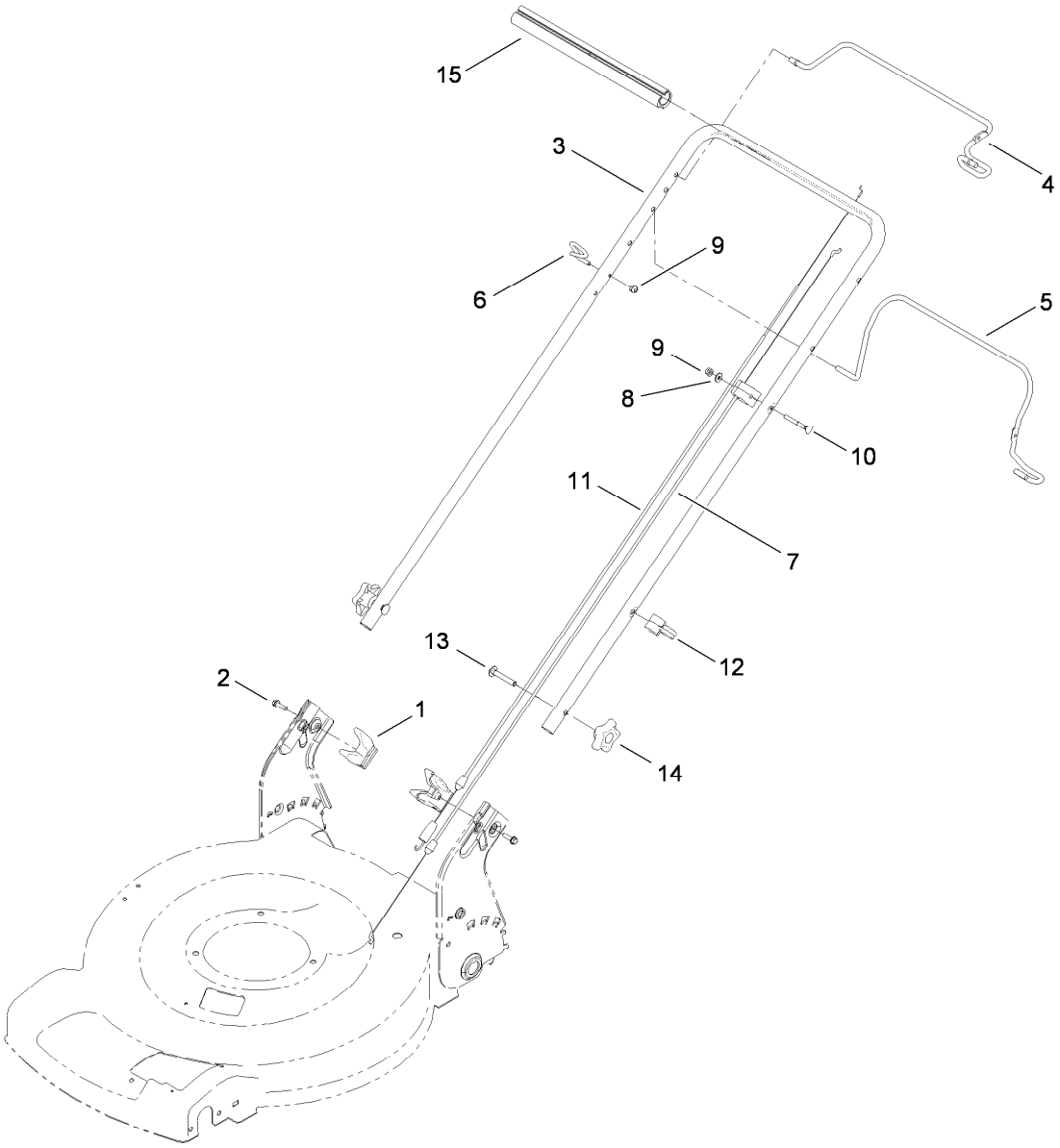

Handle Assembly

Ref.	*Part Number*	*Qty.*	*Description*
1	115-2866	2	Anchor-Bag
2	46-8091	2	Screw-HWH
3	119-3810-05	1	Handle
4	119-2378-03	1	Bail-Traction
5	117-5965-03	1	Bail-Brake
6	86-9671	1	Guide-Rope
7	112-8818	1	Cable-Brake
8	3256-1	1	Washer-Flat
9	3296-73	2	Nut-Lock, NI
10	92-2270	1	Screw-Handle
11	119-2379	1	Cable-Traction
12	114-7988	1	Guide-Cable
13	3230-6	2	Screw-CARR
14	117-5976	2	Knob-Handle, Locking
15	119-2357	1	Grip-Handle, Comfort

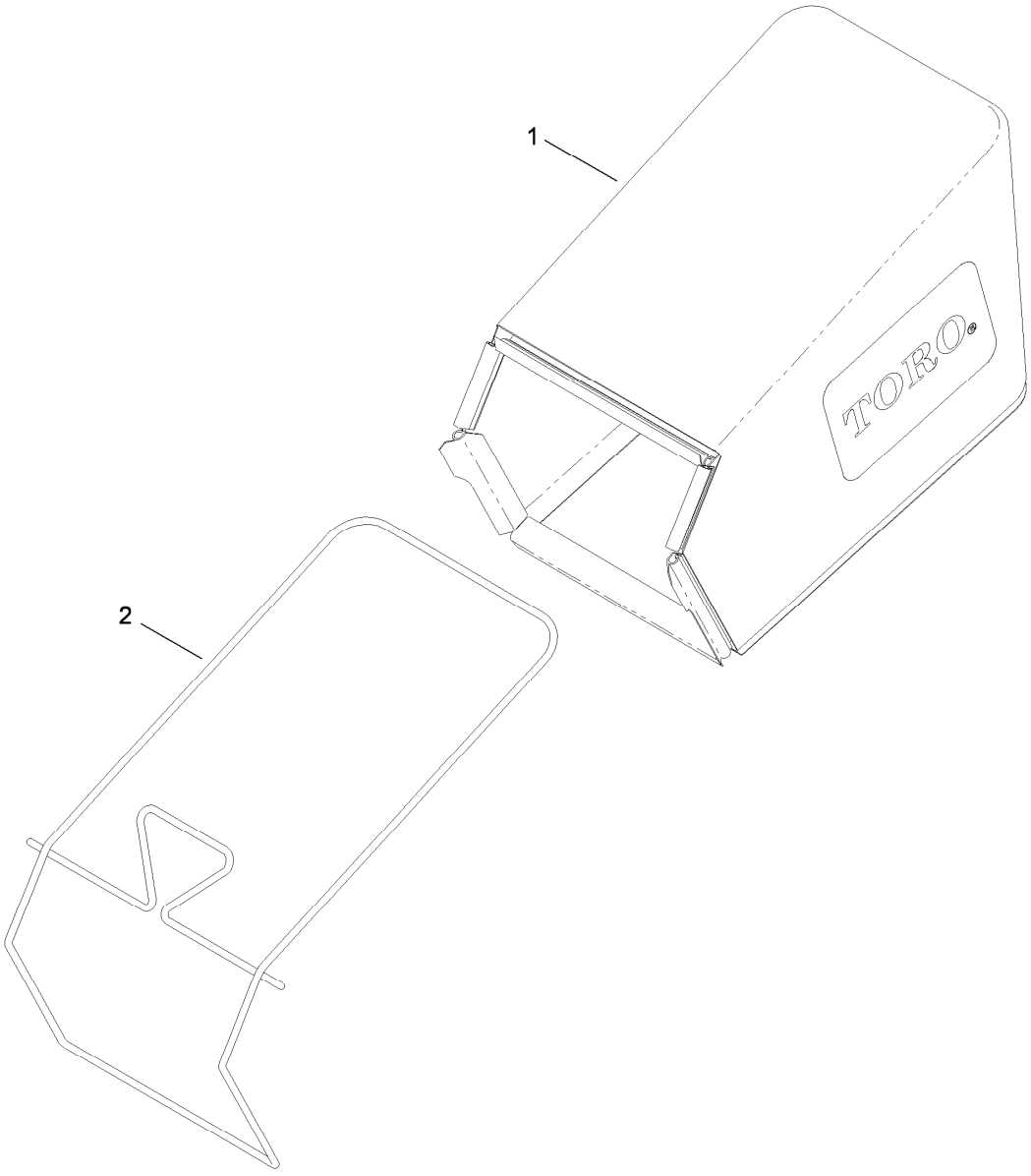

Rear Bag Assembly

Ref.	*Part Number*	*Qty.*	*Description*
1	115-4664	1	Grass Bag ASM
2	114-2639-03	1	Bag Frame ASM

Attachments and Accessories

For 20350 22in Recycler Lawn Mower

Product Name	Model/Part
22 inch Blade Kit	59534

Notes:



Count on it.