Form No. 3363-606 Rev D

TORO®

Count on it.

Operator's Manual

GrandStand™ Mower

with a 36in or 40in TURBO FORCE® Cutting Unit

Model No. 74534—Serial No. 310000001 and Up

Model No. 74536—Serial No. 310000001 and Up

Model No. 79534—Serial No. 310000001 and Up

Model No. 79536—Serial No. 310000001 and Up

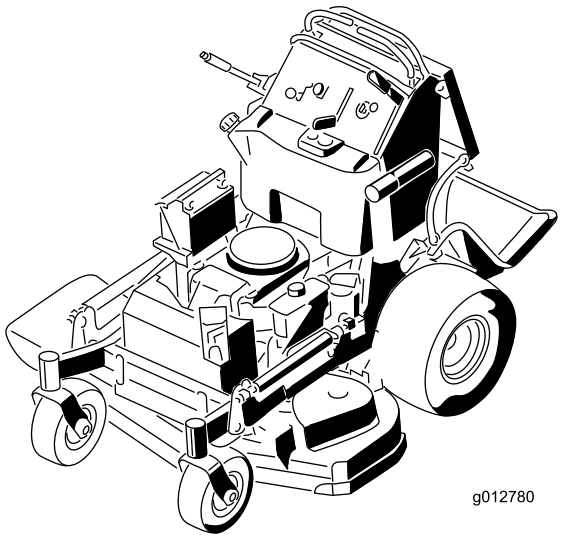

g012780

To register your product or download an *Operator's Manual* or *Parts Catalog* at no charge, go to www.Toro.com.

Original Instructions (EN)

WARNING

CALIFORNIA
Proposition 65 Warning

The engine exhaust from this product contains chemicals known to the State of California to cause cancer, birth defects, or other reproductive harm.

This spark ignition system complies with Canadian ICES-002.

Important: This engine is not equipped with a spark arrester muffler. It is a violation of California Public Resource Code Section 4442 to use or operate the engine on any forest-covered, brush-covered, or grass-covered land. Other states or federal areas may have similar laws.

The enclosed *Engine Owner's Manual* is supplied for information regarding the US Environmental Protection Agency (EPA) and the California Emission Control Regulation of emission systems, maintenance, and warranty. Replacements may be ordered through the engine manufacturer.

Introduction

This rotary-blade, riding lawn mower is intended to be used by residential homeowners or professional, hired operators. It is designed primarily for cutting grass on well-maintained lawns on residential or commercial properties. It is not designed for cutting brush or for agricultural uses.

Read this information carefully to learn how to operate and maintain your product properly and to avoid injury and product damage. You are responsible for operating the product properly and safely.

You may contact Toro directly at www.Toro.com for product and accessory information, help finding a dealer, or to register your product.

Whenever you need service, genuine Toro parts, or additional information, contact an Authorized Service Dealer or Toro Customer Service and have the model and serial numbers of your product ready. Figure 1 identifies the location of the model and serial numbers on the product. Write the numbers in the space provided.

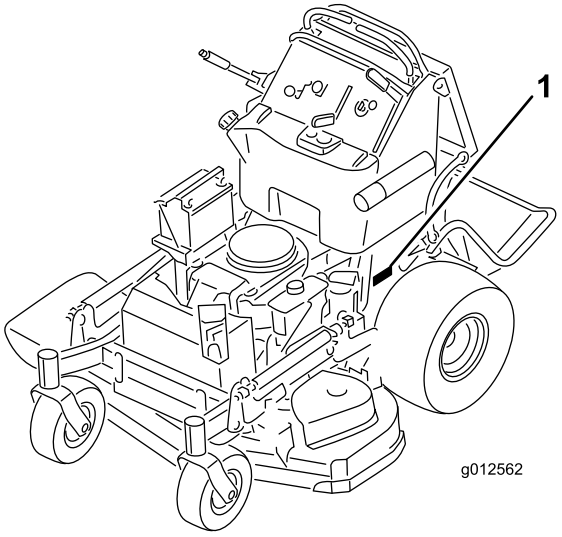

Figure 1

1. Location of the model and serial numbers

Model No. _____

Serial No. _____

This manual identifies potential hazards and has safety messages identified by the following words:

- **Danger** signals an extreme hazard that **will** cause serious injury or death if you do not follow the recommended precautions.
- **Warning** signals a hazard that **may** cause serious injury or death if you do not follow the recommended precautions.
- **Caution** signals a hazard that may cause minor or moderate injury if you do not follow the recommended precautions.

This manual uses two other words to highlight information. **Important** calls attention to special mechanical information and **Note** emphasizes general information worthy of special attention.

Contents

Introduction 2
Safety 4
Safe Operating Practices 4
Toro Mower Safety 5
Slope Indicator 7
Safety and Instructional Decals 8
Product Overview 12
Controls 12
Specifications 13

© 2010—The Toro® Company
8111 Lyndale Avenue South
Bloomington, MN 55420

Contact us at www.Toro.com.
Printed in the USA.
All Rights Reserved

Operation 14
Adding Fuel 14
Checking the Engine Oil Level 15
Breaking In a New Machine 15
Think Safety First 15
Operating the Parking Brake 15
Operating the Mower Blade Control Switch (PTO) 16
Operating the Throttle 16
Operating the Choke 16
Operating the Ignition Switch 17
Using the Speed Control Lever 17
Using the Fuel Shut-Off Valve 17
Starting and Stopping the Engine 18
The Safety Interlock System 19
Operating the Platform 20
Driving Forward or Backward 21
Stopping the Machine 22
Pushing the Machine by Hand 22
Transporting Machines 23
Loading Machines 23
Side Discharging or Mulching the Grass 24
Adjusting the Height-of-Cut 24
Adjusting the Flow Baffle 25
Positioning the Flow Baffle 25
Using Counterweights 26
Maintenance 27
Recommended Maintenance Schedule(s) 27
Premaintenance Procedures 28
Raising the Mower for Access 28
Release the Cushion for Rear Access 29
Lubrication 30
How to Grease 30
Lubricating the Machine 30
Greasing the Front Caster Pivots 31
Lubricate the Caster Wheel Hubs 31
Engine Maintenance 32
Servicing the Air Cleaner 32
Servicing the Engine Oil 33
Servicing the Spark Plug 35
Fuel System Maintenance 37
Draining the Fuel Tank 37
Servicing the Fuel Filter 37
Electrical System Maintenance 38
Servicing the Battery 38
Servicing the Fuses 39
Drive System Maintenance 40
Adjusting the Tracking 40
Checking the Tire Pressure 40
Adjusting the Caster Pivot Bearing 40
Adjusting the Electric Clutch 41
Cooling System Maintenance 42
Cleaning the Air Intake Screen 42
Cleaning the Cooling System 42
Brake Maintenance 43
Servicing the Brake 43
Belt Maintenance 44
Checking the Belts 44
Replacing the Mower Deck Belt for 36in Mowers 44
Replacing the Mower Deck Belts for 40in Mowers 44
Replacing the Right Mower Deck Belt 44
Replacing the Left Mower Deck Belt 44
Replacing the Pump Drive Belt 45
Controls System Maintenance 46
Adjusting the Motion Control Handle Positions 46
Hydraulic System Maintenance 48
Servicing the Hydraulic System 48
Mower Deck Maintenance 51
Servicing the Cutting Blades 51
Leveling the Mower 53
Replacing the Grass Deflector 56
Cleaning 57
Cleaning Under the Mower 57
Waste Disposal 57
Storage 58
Cleaning and Storage 58
Troubleshooting 59
Schematics 61

Safety

Note: The addition of attachments made by other manufacturers that do not meet American National Standards Institute certification will cause noncompliance of this machine.

Improper use or maintenance by the operator or owner can result in injury. To reduce the potential for injury, comply with these safety instructions and always pay attention to the safety alert symbol , which means CAUTION, WARNING, or DANGER-"personal safety instruction." Failure to comply with the instruction may result in personal injury or death.

Safe Operating Practices

The following instructions are from ANSI standard B71.4-2004.

Training

- Read the Operator's Manual and other training material. If the operator(s) or mechanic(s) can not read English it is the owner's responsibility to explain this material to them.
- Become familiar with the safe operation of the equipment, operator controls, and safety signs.
- All operators and mechanics should be trained. The owner is responsible for training the users.
- Never let children or untrained people operate or service the equipment. Local regulations may restrict the age of the operator.
- The owner/user can prevent and is responsible for accidents or injuries occurring to himself or herself, other people or property.

Preparation

- Evaluate the terrain to determine what accessories and attachments are needed to properly and safely perform the job. Only use accessories and attachments approved by the manufacturer.
- Wear appropriate clothing including hard hat, safety glasses and hearing protection. Long hair, loose clothing or jewelry may get tangled in moving parts.
- Inspect the area where the equipment is to be used and remove all objects such as rocks, toys and wire which can be thrown by the machine.
- Use extra care when handling gasoline and other fuels. They are flammable and vapors are explosive.
  - Use only an approved container
  - Never remove gas cap or add fuel with engine running. Allow engine to cool before refueling. Do not smoke.
  - Never refuel or drain the machine indoors.
- Check that operator's presence controls, safety switches and shields are attached and functioning properly. Do not operate unless they are functioning properly.

Operation

- Lightning can cause severe injury or death. If lightning is seen or thunder is heard in the area, do not operate the machine; seek shelter.
- Never run an engine in an enclosed area.
- Only operate in good light, keeping away from holes and hidden hazards.
- Be sure all drives are in neutral and parking brake is engaged before starting engine. Only start engine from the operator's position.
- Be sure of your footing while using this machine, especially when backing up. Walk, don't run. Never operate on wet grass. Reduced footing could cause slipping.
- Slow down and use extra care on hillsides. Be sure to travel side to side on hillsides. Turf conditions can affect the machine's stability. Use caution while operating near drop-offs.
- Slow down and use caution when making turns and when changing directions on slopes.
- Never raise deck with the blades running.
- Never operate with the PTO shield, or other guards not securely in place. Be sure all interlocks are attached, adjusted properly, and functioning properly.
- Never operate with the discharge deflector raised, removed or altered, unless using a grass catcher.
- Do not change the engine governor setting or overspeed the engine.
- Stop on level ground, disengage drives, engage parking brake (if provided), shut off engine before leaving the operator's position for any reason including emptying the catchers or unclogging the chute.
- Stop equipment and inspect blades after striking objects or if an abnormal vibration occurs. Make necessary repairs before resuming operations.
- Keep hands and feet away from the cutting unit.

- Look behind and down before backing up to be sure of a clear path.
- Keep pets and bystanders away.
- Slow down and use caution when making turns and crossing roads and sidewalks. Stop blades if not mowing.
- Be aware of the mower discharge direction and do not point it at anyone.
- Do not operate the mower under the influence of alcohol or drugs.
- Use care when loading or unloading the machine into or from a trailer or truck.
- Use care when approaching blind corners, shrubs, trees, or other objects that may obscure vision.
- Lightning can cause severe injury or death. If lightning is seen or thunder is heard in the area, do not operate the machine; seek shelter.

Maintenance and storage

- Disengage drives, set parking brake, stop engine and remove key or disconnect spark plug wire. Wait for all movement to stop before adjusting, cleaning or repairing.
- Clean grass and debris from cutting unit, drives, mufflers, and engine to help prevent fires. Clean up oil or fuel spillage.
- Let engine cool before storing and do not store near flame.
- Shut off fuel while storing or transporting. Do not store fuel near flames or drain indoors.
- Park machine on level ground. Set parking brake. Never allow untrained personnel to service machine.
- Use jack stands to support components when required.
- Carefully release pressure from components with stored energy.
- Disconnect the battery or remove spark plug wire before making any repairs. Disconnect the negative terminal first and the positive last. Reconnect the positive first and negative last.
- Use care when checking blades. Wrap the blade(s) or wear gloves, and use caution when servicing them. Only replace blades. Never straighten or weld them.
- Keep hands and feet away from moving parts. If possible, do not make adjustments with the engine running.
- Keep all parts in good working condition and all hardware tightened. Replace all worn or damaged decals.

Toro Mower Safety

The following list contains safety information specific to Toro products and other safety information you must know.

This product is capable of amputating hands and feet and throwing objects. Always follow all safety instructions to avoid serious injury or death.

This product is designed for cutting and recycling grass or, when equipped with a grass bagger, for catching cut grass. Any use for purposes other than these could prove dangerous to user and bystanders.

General Operation

- Be sure the area is clear of other people before mowing. Stop the machine if anyone enters the area.
- Do not touch equipment or attachment parts which may be hot from operation. Allow to cool before attempting to maintain, adjust or service.
- Use only Toro approved attachments. Warranty may be voided if used with unapproved attachments.
- Check carefully for overhead clearances (i.e. branches, doorways, electrical wires) before operating under any objects and do not contact them.
- Slow down before making turns and use extra caution.
- Use caution when riding the platform over curbs, rocks, roots, or other obstructions.
- Look behind and down before backing up to be sure of a clear path. Use extra care when operation in reverse.
- Never jerk the controls; use a steady motion.
- When loading or unloading the machine, use one full width ramp that is wide enough to extend beyond the width of the machine.
- Never carry passengers.
- Never carry cans or equipment on the machine.

Slope Operation

All slopes and ramps require extra caution. If you feel uneasy on a slope, do not mow it.

- Remove obstacles such as rocks, tree limbs, etc. from the mowing area.
- Watch for holes, ruts or bumps. Tall grass can hide obstacles.
- Use caution near drop-offs, ditches, or embankments. The machine could suddenly turn over if a wheel

goes over the edge of a cliff or ditch, or if an edge caves in.

- Use extra care with grass catchers or other attachments. These can change the stability of the machine.
- Keep all movement on slopes slow and gradual. Do not make sudden changes in speed or direction.
- Mow slopes side to side.
- Do not mow slopes greater than 20 degrees.

Service

- Never store the machine or fuel container inside where there is an open flame, such as near a water heater or furnace.
- Keep nuts and bolts tight, especially the blade attachment bolts. Keep equipment in good condition.
- Never tamper with safety devices. Check safety systems for proper operation before each use.
- Use only genuine replacement parts to ensure that original standards are maintained.
- Check brake operation frequently. Adjust and service as required.

Slope Indicator

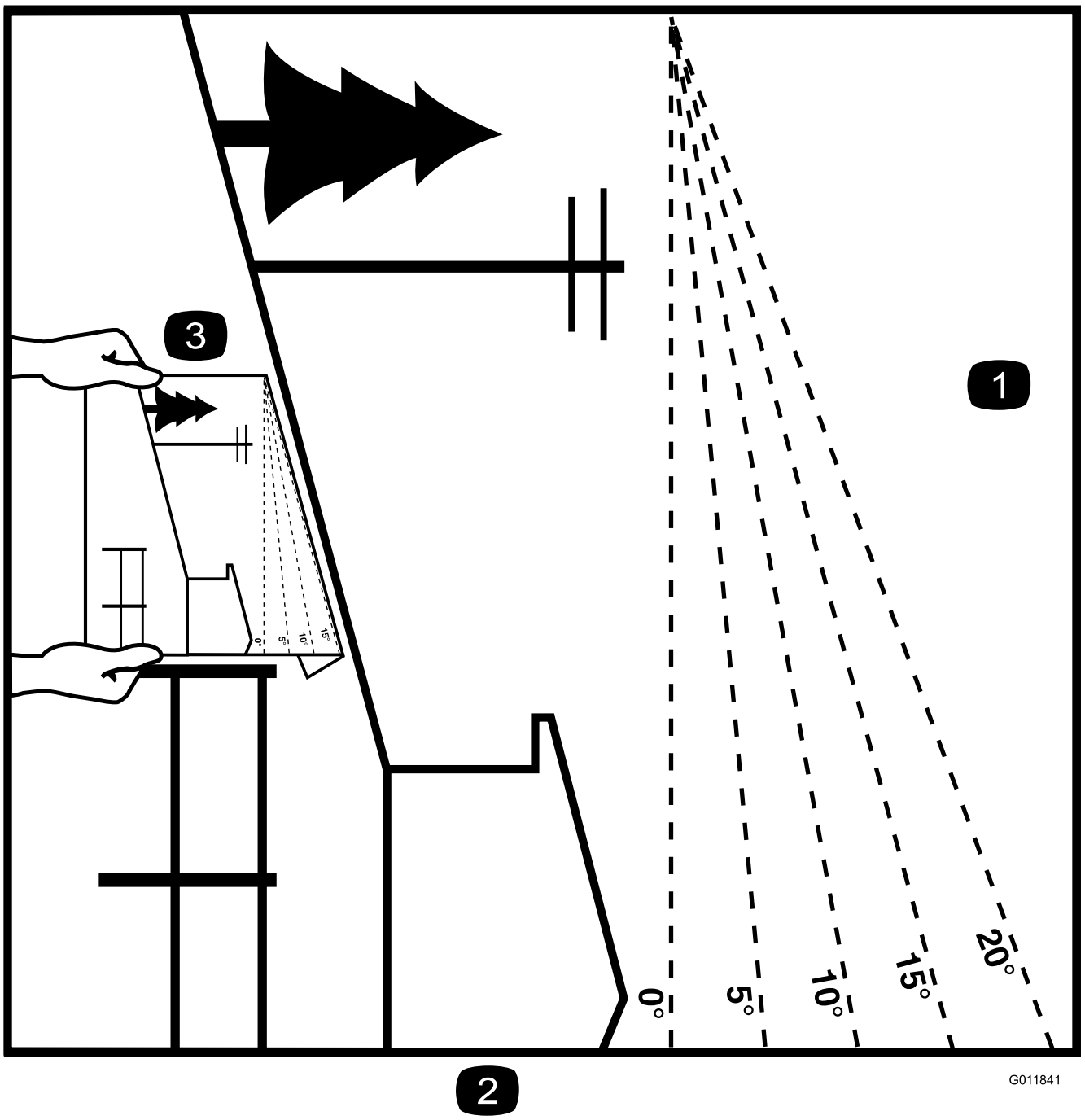

Figure 2

This page may be copied for personal use.

1. The maximum slope you can safely operate the machine on is **20 degrees**. Use the slope chart to determine the degree of slope of hills before operating. **Do not operate this machine on a slope greater than 20 degrees.** Fold along the appropriate line to match the recommended slope.
2. Align this edge with a vertical surface, a tree, building, fence pole, etc.
3. Example of how to compare slope with folded edge.

Safety and Instructional Decals

Safety decals and instructions are easily visible to the operator and are located near any area of potential danger. Replace any decal that is damaged or lost.



93-7010

1. Thrown object hazard—keep bystanders a safe distance from the machine.
2. Thrown object hazard, mower—keep the deflector in place.
3. Cutting/dismemberment of hand or foot—stay away from moving parts.

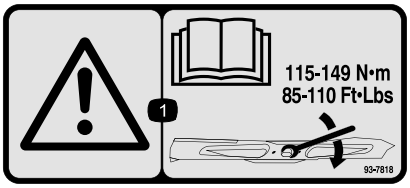

93-7818

1. Warning—read the *Operator's Manual* for instructions on torquing the blade bolt/nut to 115-149 N-m (85-110 ft-lb).



Battery Symbols

Some or all of these symbols are on your battery

1. Explosion hazard
2. No fire, open flame, or smoking.
3. Caustic liquid/chemical burn hazard
4. Wear eye protection
5. Read the *Operator's Manual.*
6. Keep bystandersa safe distance from the battery.
7. Wear eye protection; explosive gases can cause blindness and other injuries
8. Battery acid can cause blindness or severe burns.
9. Flush eyes immediately with water and get medical help fast.
10. Contains lead; do not discard.



106-5517

1. Warning—do not touch the hot surface.

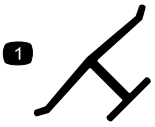

Manufacturer's Mark

1. Indicates the blade is identified as a part from the original machine manufacturer.

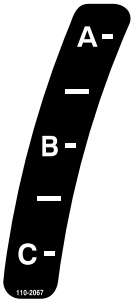

110-2067

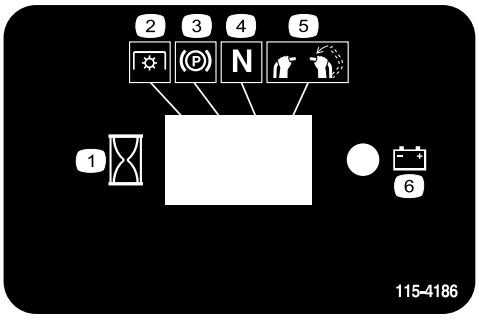

115-4186

1. Interval
2. Power Take-off (PTO)
3. Parking brake
4. Neutral
5. Operator presence switch
6. Battery



115-4212

1. Hydraulic oil level
2. Read the *Operator's Manual*.
3. Warning—do not touch the hot surface.



116-3267



116-3290

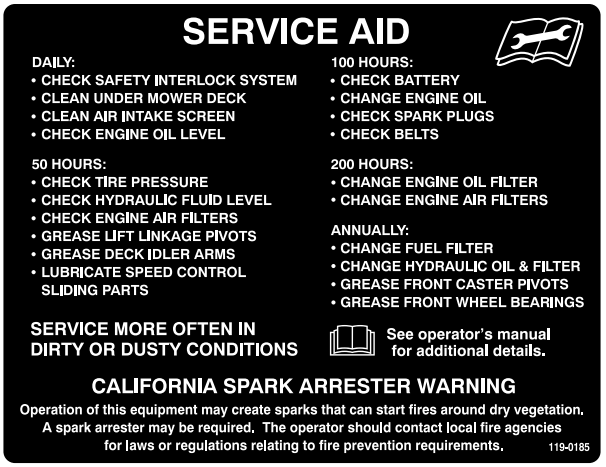

119-0185

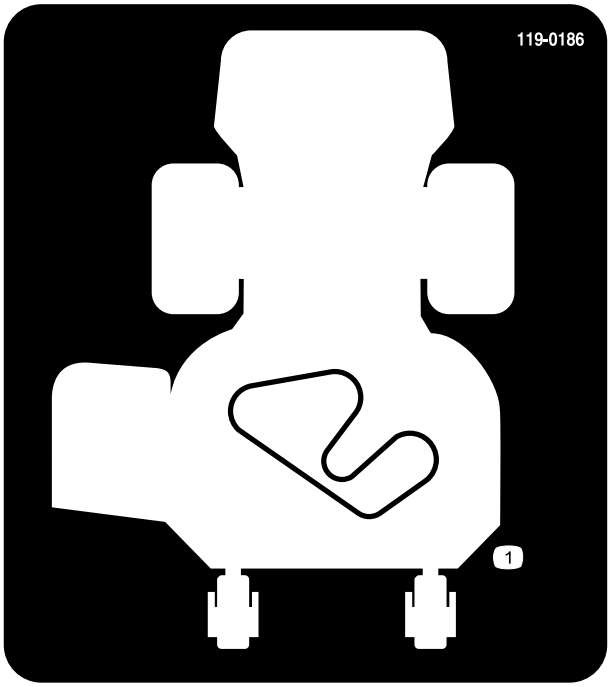

119-0186

36in Mower Deck

1. Belt routing

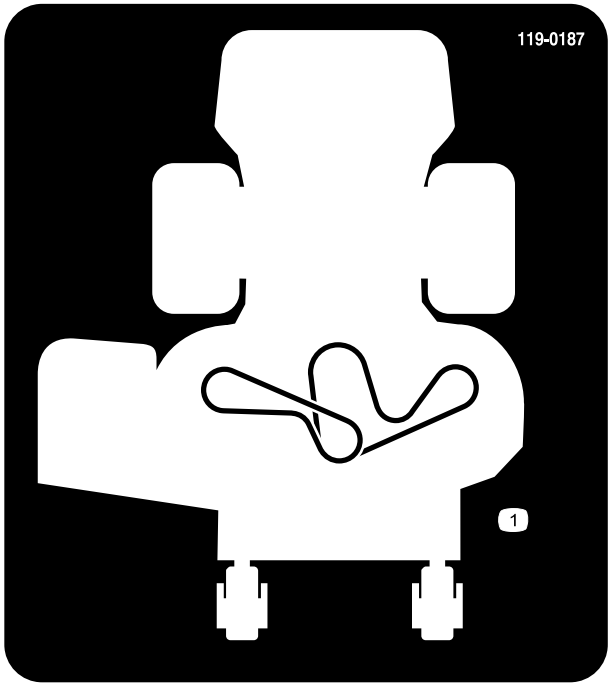

119-0187

40in Mower Deck

1. Belt routing

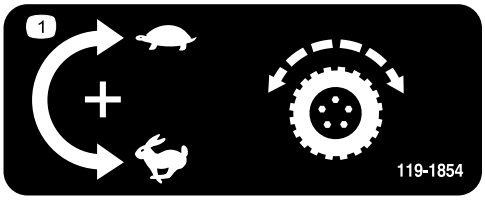

119-1854

1. Adjustment knob for traction drive speed.

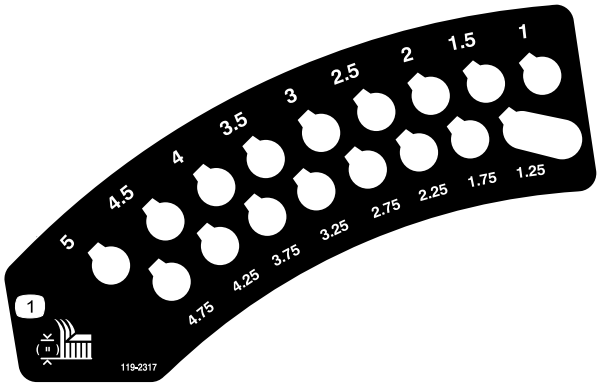

119-2317

1. Height-of-cut (inches)

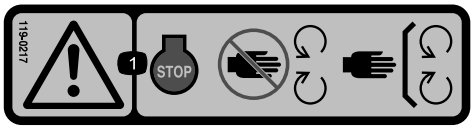

119-0217

1. Warning—stop the engine; stay away from moving parts; keep all guards and shields in place.

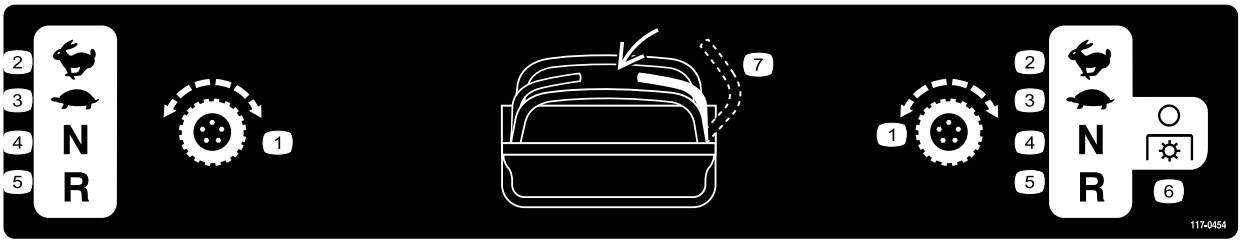

117-0454

1. Traction control
2. Fast
3. Slow
4. Neutral
5. Reverse
6. Power Take-off (PTO)—disengage
7. Operator presence switch

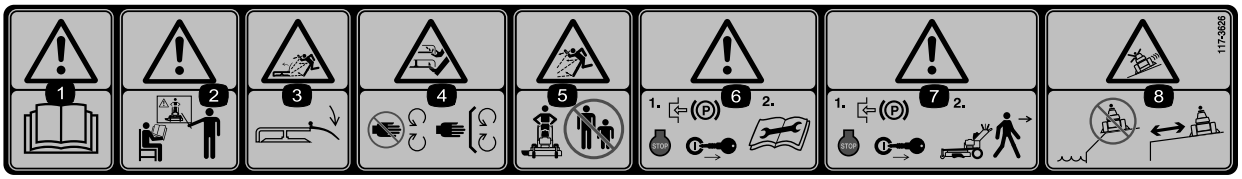

117–3626

1. Warning—read the *Operator's Manual.*
2. Warning—do not operate this machine unless you are trained.
3. Thrown object hazard—keep deflector in place.
4. Cutting, dismemberment hazard of hand or foot—stay away from moving parts and keep all guards and shields in place.
5. Thrown object hazard—keep bystanders a safe distance from the machine.
6. Warning—engage the parking brake, stop the engine and remove the spark plug wire before performing any maintenance on the machine.
7. Warning—engage the parking brake and stop the engine before leaving the machine.
8. Sliding and loss of control hazard—do not operate the machine near drop-offs or water; keep a safe distance from drop-offs.

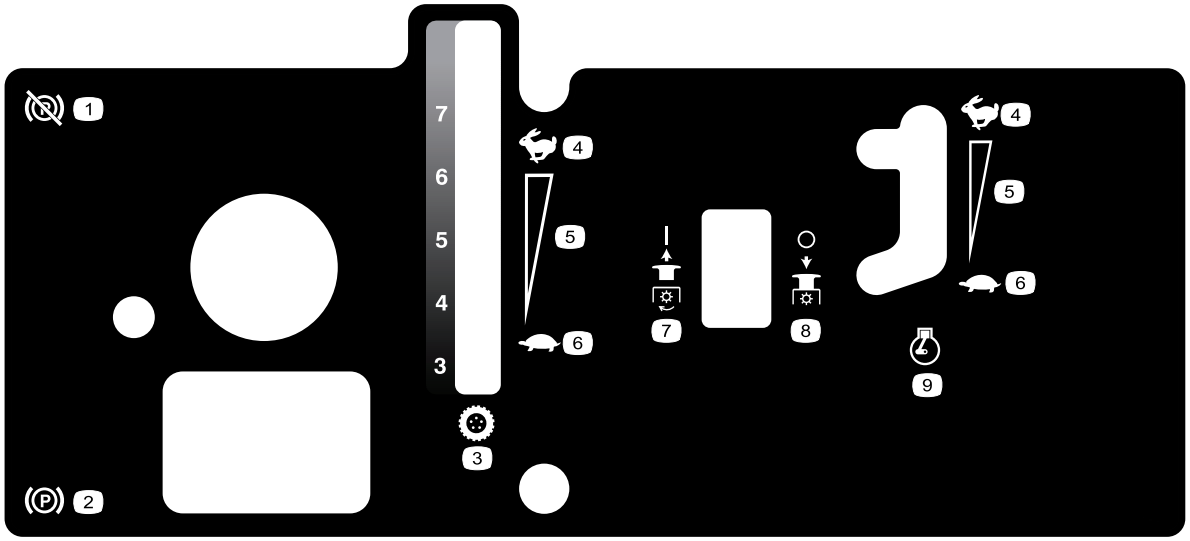

119-0234

1. Parking brake—disengaged
2. Parking brake—engaged
3. Drive speed
4. Fast
5. Continuous variable setting
6. Slow
7. PTO—engaged
8. PTO—disengaged
9. Engine speed

Product Overview

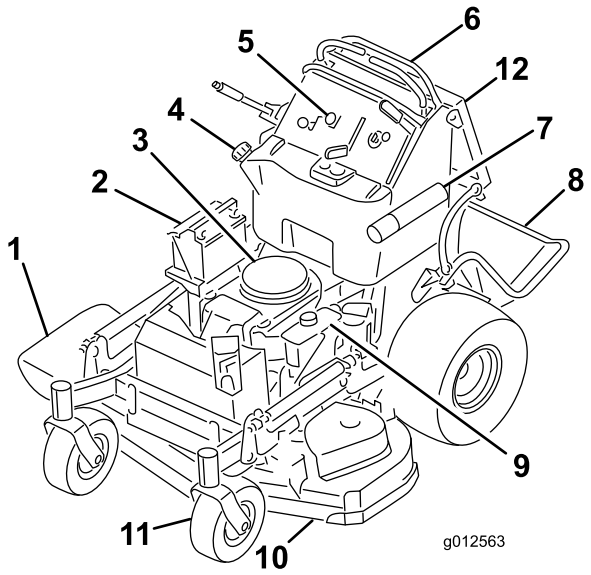

Figure 3

1. Side discharge chute
2. Battery
3. Engine
4. Fuel tank
5. Controls
6. Motion control levers
7. Manual tube
8. Platform (down position)
9. Hydraulic tank
10. Mower deck
11. Front caster wheel
12. Operator cushion

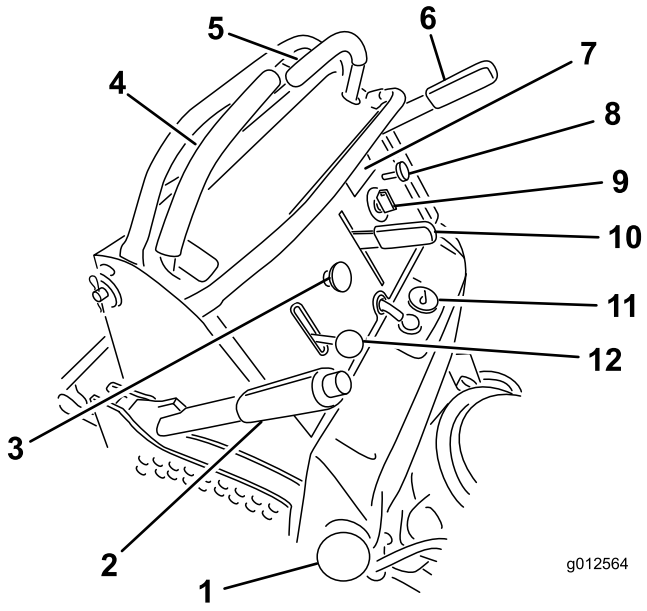

Figure 4

1. Fuel cap
2. Height-of-cut lever
3. Blade control switch (PTO)
4. Right motion control lever
5. Left motion control lever
6. Parking brake lever
7. Hour meter
8. Choke
9. Ignition switch
10. Speed control lever
11. Fuel guage
12. Throttle control

Controls

Become familiar with all the controls (Figure 4) before you start the engine and operate the machine.

Hour Meter

The hour meter records the number of hours the engine has operated. It operates when the engine is running. Use these times for scheduling regular maintenance (Figure 5).

Fuel Gauge

The fuel gauge is located on the top, middle of the tank (Figure 4).

Safety Interlock Indicators

There are symbols on the hour meter and indicate with a black triangle that the interlock component is in the correct position (Figure 5).

Battery Indicator Light

If the ignition key is turned to the **On** position for a few seconds, the battery voltage will be displayed in the area where the hours are normally displayed.

The battery light turns on when the ignition is turned on and when the charge is below the correct operating level (Figure 5).

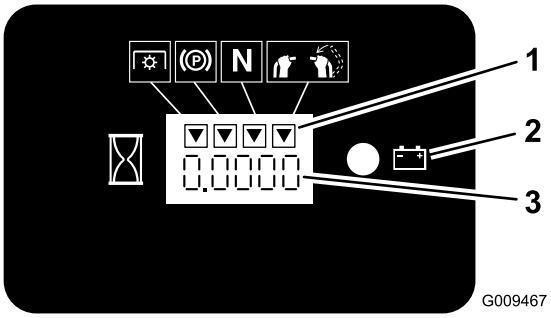

Figure 5

1. Safety interlock symbols
2. Battery light
3. Hour meter

Speed Control Lever

This machine has a variable speed control. This controls how fast or slow the machine will travel with the motion control levers pushed all the way forward.

Note: The numbers next to the speed control are an approximate maximum miles per hour (mph) the machine will travel.

Throttle Control

The throttle control is variable between **Fast** and **Slow**.

Choke

Use the choke to start a cold engine.

Blade Control Switch (PTO)

The blade control switch (PTO) is used to engage the electric clutch to drive the mower blades with the right side motion control lever in the center, un-locked position. Pull the switch up to engage the blades and release. To disengage the blades, push the blade control switch (PTO) down or move or release the right side motion control lever into the neutral lock position.

Ignition Switch

This switch is used to start the mower engine and has three positions: **Off, Run** and **Start**.

Motion Control Levers

The motion control levers are used to drive the machine forward, reverse, and turn either direction.

Fuel Shut-off Valve

Close the fuel shut-off valve (located behind the operator cushion on the right hand side of fuel tank) when transporting or storing the mower.

Attachments/Accessories

A selection of Toro approved attachments and accessories are available for use with the machine to enhance and expand its capabilities. Contact your Authorized Service Dealer or Distributor or go to www.Toro.com for a list of all approved attachments and accessories.

Specifications

Note: Specifications and design are subject to change without notice.

36 inch mowers:

Width with deflector down	51.62 inches (131.1 cm)
Length with platform down	74 inches (188 cm)
Length with platform up	61 inches (155 cm)
Height	48 inches (121.9 cm)
Weight with 18hp engine	756 (343 kg)

40 inch mowers:

Width with deflector down	55.75 inches (141.6 cm)
Length with platform down	70 inches (177.8 cm)
Length with platform up	57 inches (144.8 cm)
Height	48 inches (121.9 cm)
Weight with 18hp engine	773 (350.6 kg)

Operation

Adding Fuel

Use **Unleaded** Regular Gasoline suitable for automotive use (85 pump octane minimum). Leaded regular gasoline may be used if unleaded regular is not available.

Important: Never use methanol, gasoline containing methanol, or gasohol containing more than 10% ethanol because the fuel system could be damaged. Do not mix oil with gasoline.

⚠ DANGER

In certain conditions, gasoline is extremely flammable and highly explosive. A fire or explosion from gasoline can burn you and others and can damage property.

- **Fill the fuel tank outdoors on level ground, in an open area, when the engine is cold. Wipe up any gasoline that spills., in an open area, when the engine is cold. Wipe up any gasoline that spills.**
- **Never fill the fuel tank inside an enclosed trailer.**
- **Do not fill the fuel tank completely full. Fill the fuel tank to the bottom of the filler neck. The empty space in the tank allows gasoline to expand. Overfilling may result in fuel leakage or damage to the engine or emission system (if equipped).**
- **Never smoke when handling gasoline, and stay away from an open flame or where gasoline fumes may be ignited by a spark.**
- **Store gasoline in an approved container and keep it out of the reach of children. Never buy more than a 30-day supply of gasoline.**
- **Do not operate without entire exhaust system in place and in proper working condition.**

⚠ DANGER

In certain conditions during fueling, static electricity can be released causing a spark which can ignite the gasoline vapors. A fire or explosion from gasoline can burn you and others and can damage property.

- **Always place gasoline containers on the ground away from your vehicle before filling.**
- **Do not fill gasoline containers inside a vehicle or on a truck or trailer bed because interior carpets or plastic truck bed liners may insulate the container and slow the loss of any static charge.**
- **When practical, remove gas-powered equipment from the truck or trailer and refuel the equipment with its wheels on the ground.**
- **If this is not possible, then refuel such equipment on a truck or trailer from a portable container, rather than from a gasoline dispenser nozzle.**
- **If a gasoline dispenser nozzle must be used, keep the nozzle in contact with the rim of the fuel tank or container opening at all times until fueling is complete.**

⚠ WARNING

Gasoline is harmful or fatal if swallowed. Long-term exposure to vapors can cause serious injury and illness.

- **Avoid prolonged breathing of vapors.**
- **Keep face away from nozzle and gas tank or conditioner opening.**
- **Keep gas away from eyes and skin.**

Using Stabilizer/Conditioner

Use a fuel stabilizer/conditioner in the machine to provide the following benefits:

- Keeps gasoline fresh during storage of 90 days or less. For longer storage it is recommended that the fuel tank be drained.
- Cleans the engine while it runs
- Eliminates gum-like varnish buildup in the fuel system, which causes hard starting

Important: Do not use fuel additives containing methanol or ethanol.

Add the correct amount of gas stabilizer/conditioner to the gas.

Note: A fuel stabilizer/conditioner is most effective when mixed with fresh gasoline. To minimize the chance of varnish deposits in the fuel system, use fuel stabilizer at all times.

Filling the Fuel Tank

Note: Do not fill the fuel tank completely full. Fill the fuel tank to the bottom of the filler neck. The empty space in the tank allows the gasoline to expand.

1. Park the machine on level ground.
2. Shut the engine off and set the parking brake.
3. Clean around the fuel tank cap.
4. Fill the fuel tank to the bottom of the filler neck. Ensure there is empty space in the tank to allow the gasoline to expand (Figure 6).

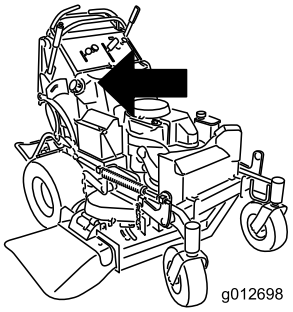

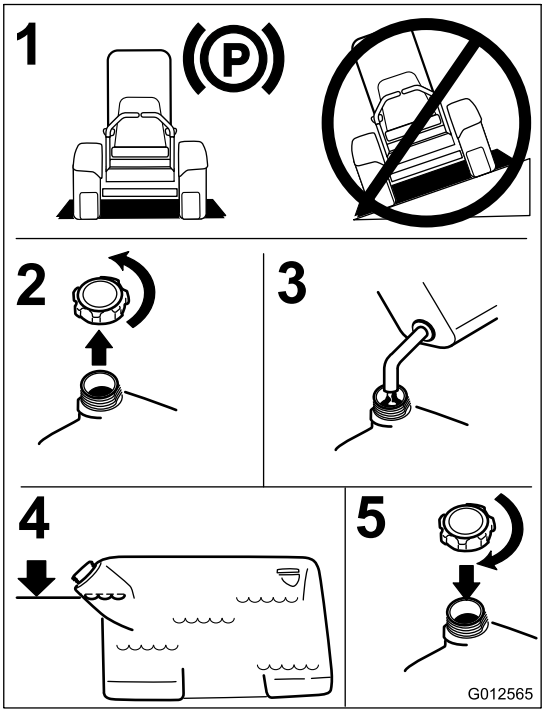

Figure 6

Checking the Engine Oil Level

Before you start the engine and use the machine, check the oil level in the engine crankcase; refer to Checking Oil Level in Engine Maintenance.

Note: Determine the left and right sides of the machine from the normal operating position.

Breaking In a New Machine

New engines take time to develop full power. Mower decks and drive systems have higher friction when new, placing additional load on the engine. Allow 40 to 50 hours of break-in time for new machines to develop full power and best performance.

Think Safety First

Carefully read all the safety instructions and decals in the safety section. Knowing this information could help you or any bystanders avoid injury.

The use of protective equipment for eyes, hearing, feet and head is recommended.

⚠ CAUTION

This machine produces sound levels in excess of 85 dBA at the operator's ear and can cause hearing loss through extended periods of exposure.

Wear hearing protection when operating this machine.

Operating the Parking Brake

Always set the parking brake when you stop the machine or leave it unattended. Before each use, check the parking brake for proper operation.

If the parking brake does not hold securely, adjust it. Refer to Servicing the Parking Brake.

⚠ CAUTION

Children or bystanders may be injured if they move or attempt to operate the machine while it is unattended.

Always remove the ignition key and set the parking brake when leaving the machine unattended, even if just for a few minutes.

Setting the Parking Brake

Pull the parking brake lever rearward to the engaged position (Figure 7).

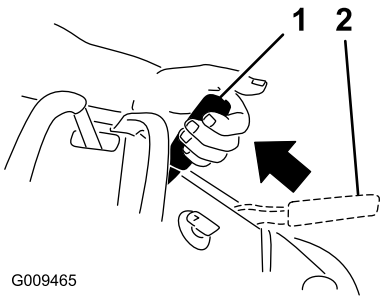

Figure 7

1. Parking brake engaged 2. Parking brake released

Releasing the Parking Brake

Push the parking brake lever forward.

Operating the Mower Blade Control Switch (PTO)

The blade control switch (PTO) is used in conjunction with the right side motion control lever to engage and disengage the mower blades.

Engaging the Mower Blades (PTO)

1. To engage the mower blades, move the right side motion control lever to the center, un-locked position.
2. Pull the blade control switch (PTO) up and release it while holding down the right side motion control lever in the center, un-locked position.

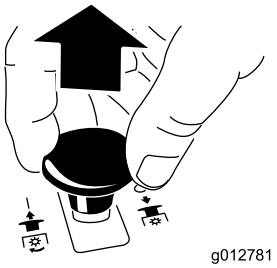

Figure 8

Disengaging the Mower Blades (PTO)

The following are two options for disengaging the mower blades.

- Push the blade control switch (PTO) down to the off position.

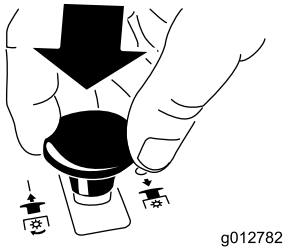

Figure 9

- Move the motion control levers to neutral and move the right side motion control lever into the neutral lock position.

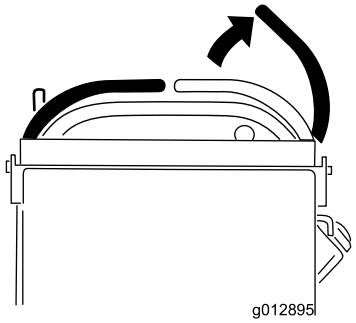

Figure 10

Operating the Throttle

The throttle control can be moved between **Fast** and **Slow** positions (Figure 11).

Always use the fast position when turning on the mower deck with the blade control switch (PTO).

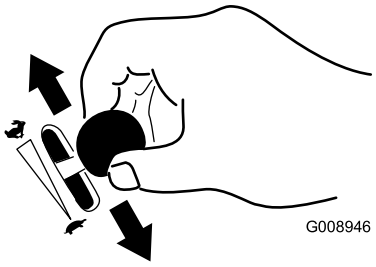

Figure 11

Operating the Choke

Use the choke to start a cold engine.

1. If the engine is cold, use the choke to start the engine.
2. Pull up on the choke knob to engage the choke before using the ignition switch (Figure 12).
3. Push down on the choke to disengage the choke after the engine has started (Figure 12).

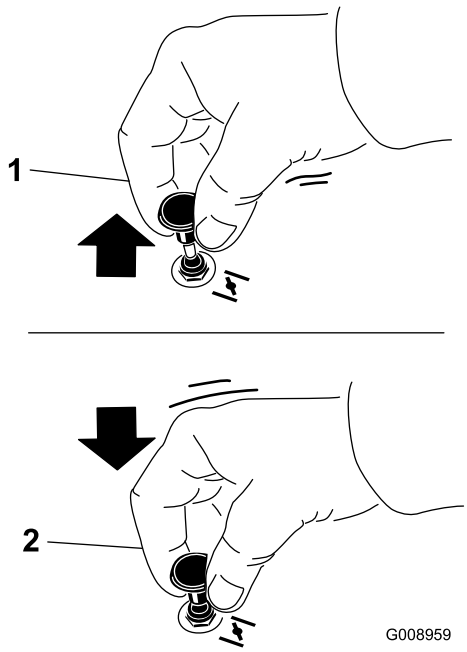

Figure 12

1. On 2. Off

Operating the Ignition Switch

1. Turn the ignition key to the Start position (Figure 13). When the engines starts, release the key.

   Important: Do not engage starter for more than 5 seconds at a time. If the engine fails to start allow a 15 second cool-down period between attempts. Failure to follow these instructions can burn out the starter motor.

   Note: Additional starting cycles may be required when starting the engine for the first time after the fuel system has been without fuel completely.

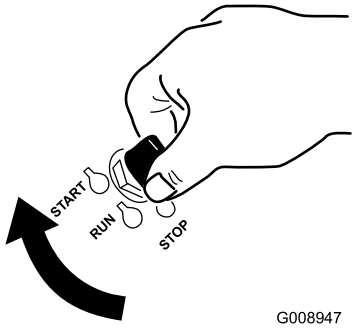

Figure 13

2. Turn the ignition key to the **stop** position to stop the engine.

Using the Speed Control Lever

This machine has a speed control lever that sets the maximum ground speed of the machine. This can be adjusted to the operator's desired speed. It is recommended to use the slowest speed for new operator's.

Note: The numbers next to the speed control are an approximate miles per hour (mph) the machine will travel.

1. Move the speed control lever to set the desired speed.
   - Full forward has quick response and maximum speed.
   - Full rearward has smooth response and slower speed.
2. Move the control levers to drive the machine. The control levers may be pushed forward to the front reference bar while the maximum speed of the machine is set by the speed control lever.

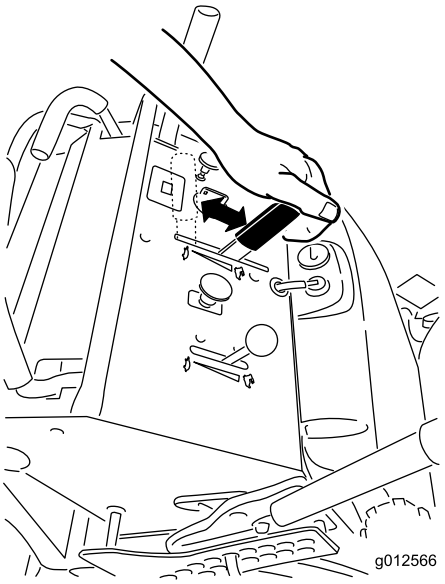

Figure 14

Using the Fuel Shut-Off Valve

The fuel shut-off valve is located behind the right side of the operator cushion.

Close the fuel shut-off valve for transport, maintenance, and storage (Figure 15).

Ensure the fuel shut-off valve is open when starting the engine.

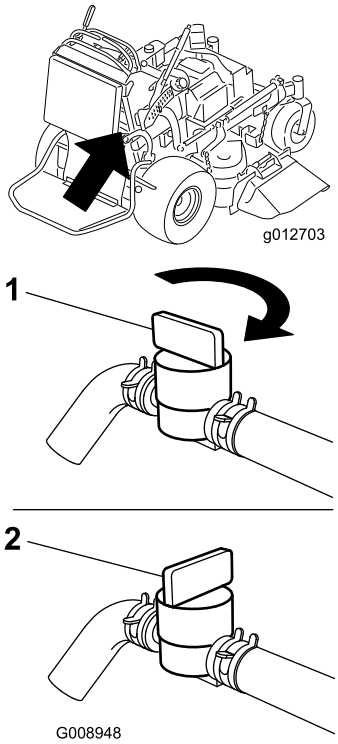

Figure 15

1. On
2. Off

Starting and Stopping the Engine

Starting the Engine

1. Connect the wires to the spark plugs.
2. Open the fuel valve.
3. Move the right motion control lever to neutral locked position.
4. Set the parking brake; refer to Setting the Parking Brake.
5. Move the blade control switch (PTO) to the **Off** position.
6. Move the throttle lever midway between the **Slow** and **Fast** positions.

   Note: A warm or hot engine may not require choking.

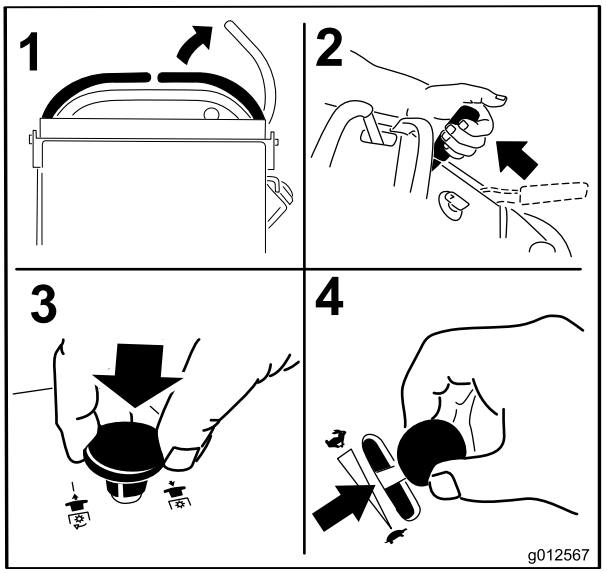

Figure 16

7. Turn the ignition key to the Start position (Figure 13). When the engines starts, release the key.

   Important: Do not engage starter for more than 5 seconds at a time. If the engine fails to start allow a 15 second cool-down period between attempts. Failure to follow these instructions can burn out the starter motor.

   Note: Additional starting cycles may be required when starting the engine for the first time after the fuel system has been without fuel completely.

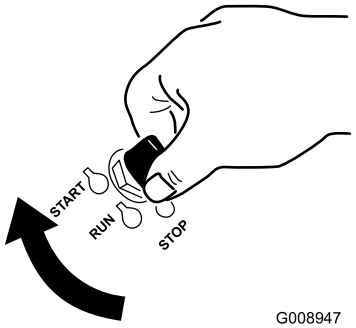

Figure 17

1. Off
2. Run
3. Start

Stopping the Engine

⚠ CAUTION

Children or bystanders may be injured if they move or attempt to operate the tractor while it is unattended.

Always remove the ignition key and set the parking brake when leaving the machine unattended, even if just for a few minutes.

Let the engine idle at slow throttle (turtle) for 60 seconds before turning the ignition switch off.

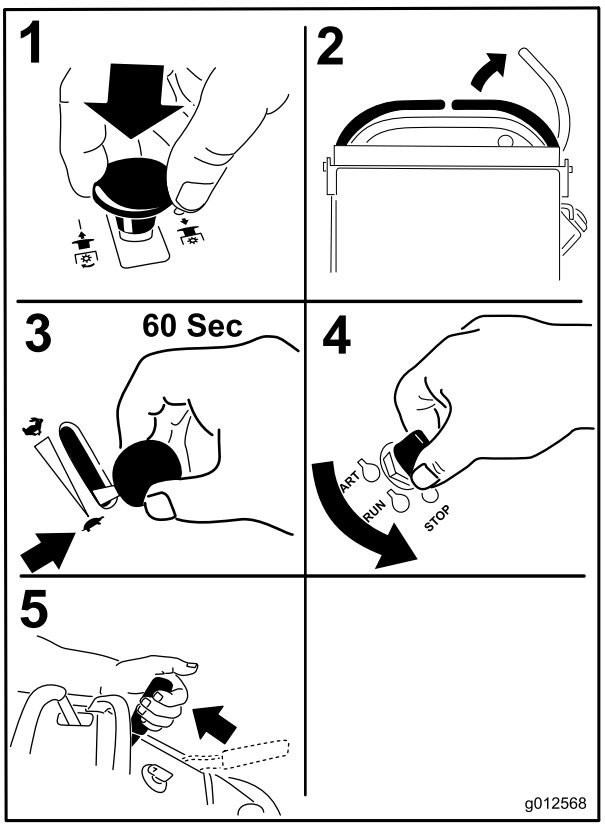

Figure 18

Important: Make sure fuel shut off valve is closed before transporting or storing the machine, as fuel leakage may occur. Before storing the machine, pull wire off spark plug(s) to prevent possibility of accidental starting.

The Safety Interlock System

⚠ CAUTION

If safety interlock switches are disconnected or damaged the machine could operate unexpectedly causing personal injury.

- **Do not tamper with the interlock switches.**
- **Check the operation of the interlock switches daily and replace any damaged switches before operating the machine.**

Understanding the Safety Interlock System

The safety interlock system is designed to prevent the mower blades from rotating unless:

- The right side motion control lever is moved to the center, un-locked position.
- The blade control switch (PTO) is pulled **on**.

The safety interlock system is designed to stop the mower blades if you move or release the right side motion control lever into the neutral lock position.

The hour meter has symbols to notify the user when the interlock component is in the correct position. When the component is in the correct position, a triangle will light up in the corresponding square.

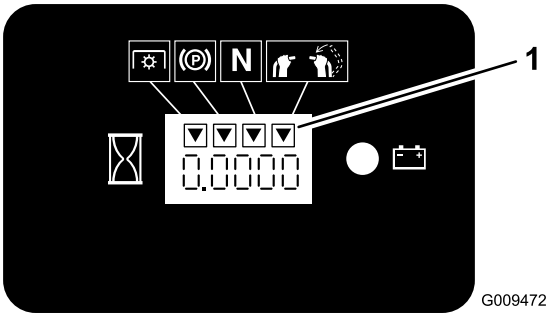

Figure 19

1. Triangles light up when the interlock components are in the correct position

Testing the Safety Interlock System

Service Interval: Before each use or daily

Test the safety interlock system before you use the machine each time.

Note: If the safety system does not operate as described below, have an Authorized Service Dealer repair the safety system immediately.

1. Start the engine; refer to Starting and Stopping the Engine in Operation (page 14).
2. Set the parking brake.

3. Move the right side motion control lever to the center, un-locked position. **The blades should not rotate.**
4. Move the motion control levers forward. **The engine should kill.**
5. Start the engine and release the parking brake.
6. Move the right side motion control lever to the center, un-locked position.
7. Continue holding the right side motion control lever in the center, un-locked position and pull up on the blade control switch (PTO) and release. The clutch should engage and the mower blades begin rotating.
8. Move or release the right side motion control lever into the neutral lock position. **The blades should stop rotating and the engine continues to run.**
9. Push the blade control switch down and move the right side motion control lever to the center, un-locked position.
10. Continue holding the right side motion control lever in the center, un-locked position and pull up on the blade control switch (PTO) and release. The clutch should engage and the mower blades begin rotating.
11. Push the blade control switch (PTO) down to the off position. **The blades should stop rotating.**
12. With the engine running, pull up the blade control switch (PTO) and release without holding right side motion control lever to the center, un-locked position. **The blades should not rotate.**

⚠ WARNING

The operator platform is heavy and may cause injury when lowering and raising the operator platform. The platform may suddenly drop if not supported when the latch pin is pulled out.

- **Do not put hands or fingers in the platform pivot area when lowering or raising the operator platform.**
- **Make sure the platform is supported when the latch pin is pulled out.**
- **Make sure the latch secures the platform when folding it in the up position. Push it tight against the cushion for the latch pin to lock into place.**
- **Keep bystanders away when raising or lowering the platform.**

Operating the Platform

The machine can be used with the platform in the up or down position. It is the operator's preference on which position to use.

Operating the Machine with the Platform Up

Operating the machine with the platform up is recommended when:

- Mowing near drop-off's
- Mowing small areas where the machine is too long
- Areas with low over hanging branches or obstacles
- Loading the machine for transport
- Driving up slopes

To raise the platform, pull the back of the platform up so the latch pin locks it into place. Push the platform tight against the cushion for the latch pin to lock into place.

Operating the Machine with the Platform Down

Operating the machine with the platform down is recommended when:

- Mowing most areas
- Driving across slopes
- Driving down slopes

To lower the platform, push the platform forward against the cushion to release pressure on the latch pin and then pull the knob out and lower the platform. Make sure to hold on to the platform when releasing the latch.

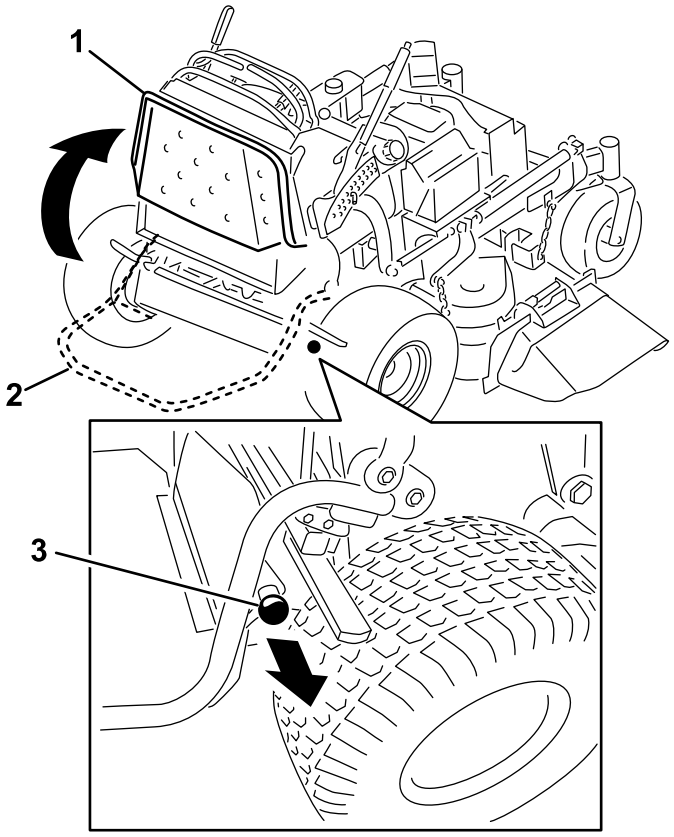

Figure 20

1. Platform up
2. Platform down
3. Pull the knob out to release the platform

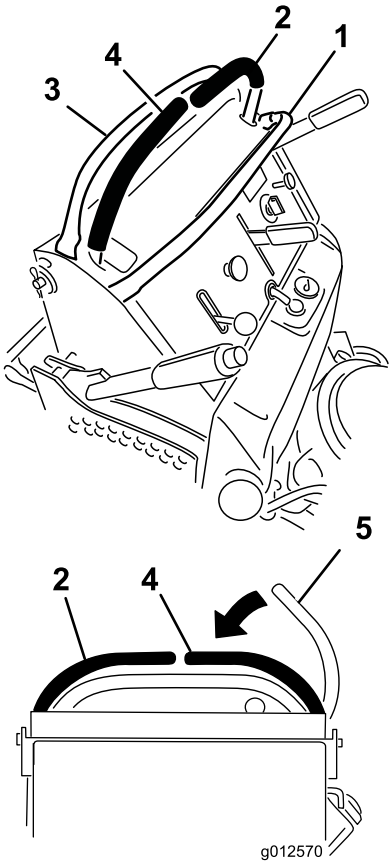

Figure 21

1. Front reference bar
2. Left control lever
3. Rear reference bar
4. Right control lever
5. Right control lever in the neutral lock position

Driving Forward or Backward

The throttle control regulates the engine speed as measured in rpm (revolutions per minute). Place the throttle control in the fast position for best performance. Always operate in the full throttle position when mowing.

⚠ CAUTION

Machine can spin very rapidly. Operator may lose control of machine and cause personal injury or damage to machine.

Slow the machine down before making sharp turns.

Driving Forward

1. Release the parking brake; refer to Releasing the Parking Brake in Operation.
2. To go forward, move the speed control lever to the desired speed.
3. Move the right side motion control lever to the center, un-locked position.
4. Slowly push the motion control levers forward (Figure 22).

   Note: The engine will kill if a motion control lever is moved with the parking brake engaged.

   The farther you move the motion control levers in either direction, the faster the machine will move in that direction.

   To stop, pull the motion control levers back to the neutral position.

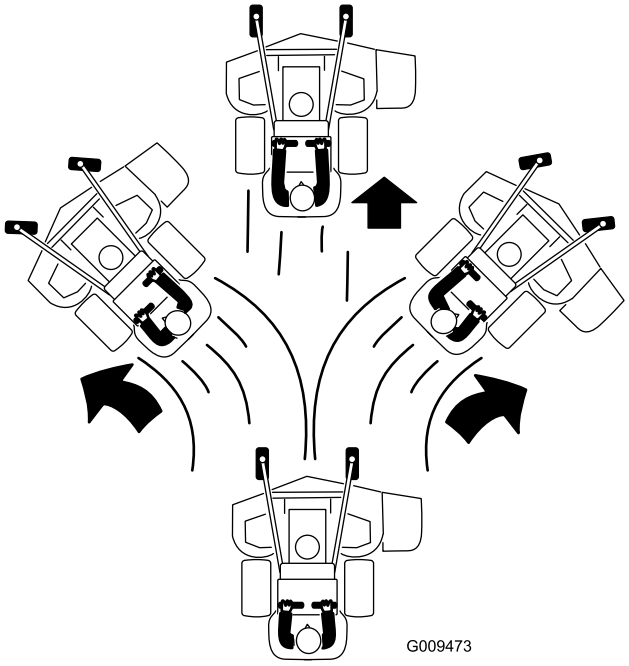

Figure 22

Driving Backward

1. Move the right side motion control lever to the center, un-locked position.
2. Slowly pull the motion control levers rearward (Figure 23).

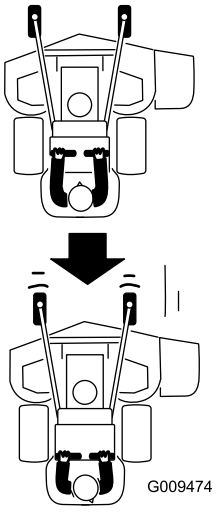

Figure 23

Stopping the Machine

To stop the machine, move the motion control levers to neutral, move the right side motion control lever into the neutral lock position, disengage the power take off (PTO), and turn the ignition key to off.

Set the parking brake when you leave the machine; refer to Setting the Parking Brake in Operation. Remember to remove the key from the ignition switch.

⚠ CAUTION

Children or bystanders may be injured if they move or attempt to operate the tractor while it is unattended.

Always remove the ignition key and set the parking brake when leaving the machine unattended, even if just for a few minutes.

Pushing the Machine by Hand

The by-pass valves allow the machine to be pushed by hand without the engine running.

Important: Always push the machine by hand. Never tow the machine because hydraulic damage may occur.

To Push the Machine

1. Disengage the PTO, move the motion control levers to the neutral locked position and set the parking brake.
2. Lower the mower deck to the lowest height-of-cut (HOC). This will allow access to the by pass valves.
3. Open the by-pass valve on both pumps by turning them counter clockwise 1 to 2 turns. This allows hydraulic fluid to by-pass the pumps and the wheels to turn (Figure 24).

   Note: Rotate the by-pass valves a maximum of 2 turns so the valve does not come out of the body causing fluid to run out.

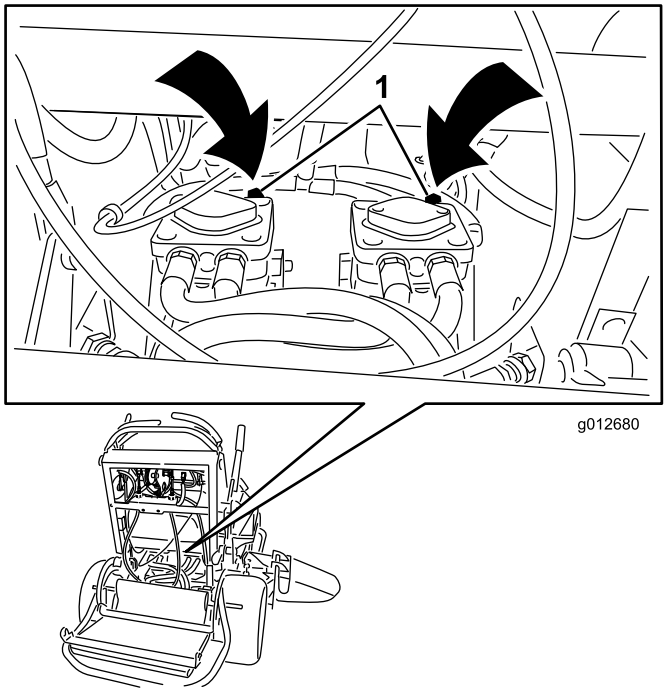

Figure 24

1. Pump by-pass valve

4. Release the parking brake.
5. Push the machine to the desired location.
6. Set the parking brake.
7. Close the by-pass valves, but do not overtighten them.

   Important: Do not start or operate the machine with the by-pass valves open. Damage to system may occur.

Transporting Machines

Use a heavy-duty trailer or truck to transport the machine. Ensure that the trailer or truck has all necessary brakes, lighting, and marking as required by law. Please carefully read all the safety instructions. Knowing this information could help you, your family, pets or bystanders avoid injury.

To transport the machine:

1. Raise the platform of the machine before driving up onto the trailer or truck.
2. If using a trailer, connect it to the towing vehicle and connect the safety chains.
3. If applicable, connect the trailer brakes.
4. Load the machine onto the trailer or truck.
5. Stop the engine, remove the key, set the brake, and close the fuel valve.
6. Use the metal tie down loops on the machine to securely fasten the machine to the trailer or truck with straps, chains, cable, or ropes (Figure 25).

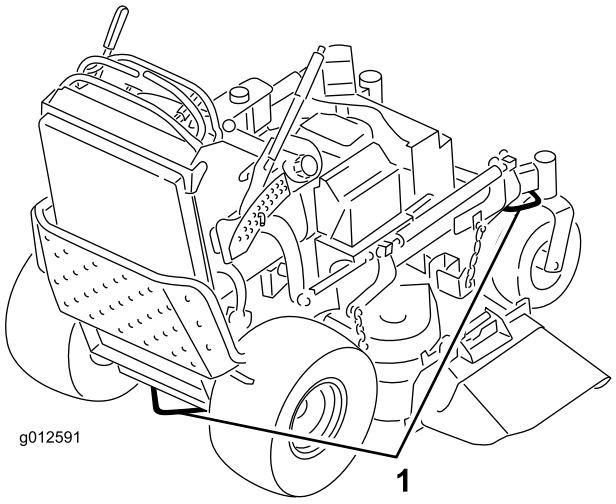

Figure 25

1. Traction unit tie down loop

Loading Machines

Use extreme caution when loading units on trailers or trucks. One full width ramp that is wide enough to extend beyond the rear tires is recommended instead of individual ramps for each side of the unit (Figure 26). The platform when down and locked into position, extends back between the rear wheels and serves as a stop for tipping backward. Having a full width ramp provides a surface for the platform to contact if the unit starts to tip backward. With the platform up, a full width ramp provides a surface to walk on behind the unit. The operator should determine if it is best to have the platform up or down when loading, depending on conditions. If it is not possible to use one full width ramp, use enough individual ramps to simulate a full width continuous ramp.

The ramp should be long enough so that the angles do not exceed 20 degrees (Figure 26). A steeper angle may cause mower components to get caught as the unit moves from ramp to trailer or truck. Steeper angles may also cause the unit to tip backward. If loading on or near a slope, position the trailer or truck so it is on the down side of the slope and the ramp extends up the slope. This will minimize the ramp angle. The trailer or truck should be as level as possible.

Important: Do Not attempt to turn the unit while on the ramp; you may lose control and drive off the side.

Avoid sudden acceleration when driving up a ramp and sudden deceleration when backing down a ramp. Both maneuvers can cause the unit to tip backward.

⚠ WARNING

Loading a unit onto a trailer or truck increases the possibility of backward tip-over and could cause serious injury or death.

- **Use extreme caution when operating a unit on a ramp.**
- **Use only a single, full width ramp; Do Not use individual ramps for each side of the unit.**
- **If individual ramps must be used, use enough ramps to create an unbroken ramp surface wider than the unit.**
- **Do not exceed a 20 degree angle between ramp and ground or between ramp and trailer or truck.**
- **Avoid sudden acceleration while driving unit up a ramp to avoid tipping backward.**
- **Avoid sudden deceleration while backing unit down a ramp to avoid tipping backward.**

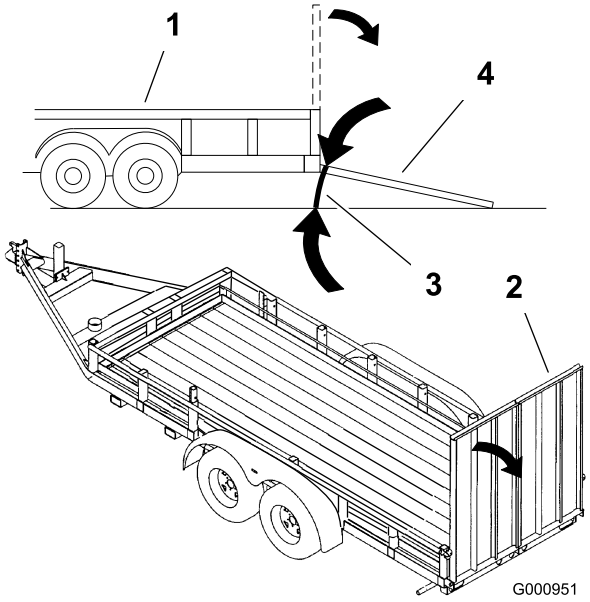

Figure 26

1. Trailer
2. Full width ramp
3. Not greater than 20 degrees
4. Full width ramp—side view

Side Discharging or Mulching the Grass

This mower has a hinged grass deflector that disperses clippings to the side and down toward the turf.

⚠ DANGER

Without the grass deflector, discharge cover, or complete grass catcher assembly mounted in place, you and others are exposed to blade contact and thrown debris. Contact with rotating mower blade(s) and thrown debris will cause injury or death.

- **Never remove the grass deflector from the mower because the grass deflector routes material down toward the turf. If the grass deflector is ever damaged, replace it immediately.**
- **Never put your hands or feet under the mower.**
- **Never try to clear discharge area or mower blades unless you release the bail and the power take off (PTO) is off. Rotate the ignition key to Off. Also remove the key and pull the wire(s) off the spark plug(s).**

Adjusting the Height-of-Cut

The height-of-cut can be adjusted from 1 to 5 inches (25 to 127 mm) in 1/4 inch (6 mm) increments.

1. Move the height-of-cut lever to the transport position (all the way up).
2. To adjust, rotate the pin 90 degrees and remove the pin from the height-of-cut bracket
3. Select a hole in the height-of-cut bracket corresponding to the height-of-cut desired and, insert the pin (Figure 27).
4. Push the button on top and lower the height-of-cut lever to the pin (Figure 27).

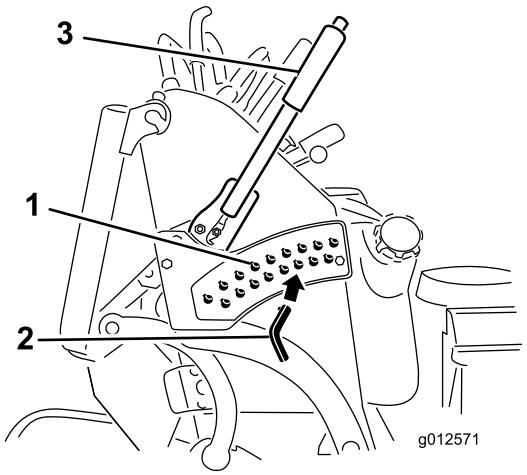

Figure 27

1. Height-of-cut holes
2. Height-of-cut pin
3. Height-of-cut lever

Adjusting the Flow Baffle

The mower discharge flow can be adjusted for different types of mowing conditions. Position the cam lock and baffle to give the best quality of cut.

1. Disengage the PTO, move the motion control levers to the neutral locked position and set the parking brake.
2. Stop the engine, remove the key, and wait for all moving parts to stop before leaving the operating position.
3. To adjust the baffle, loosen the nut (Figure 28).
4. Adjust the baffle and nut in the slot to the desired discharge flow and tighten the nut.

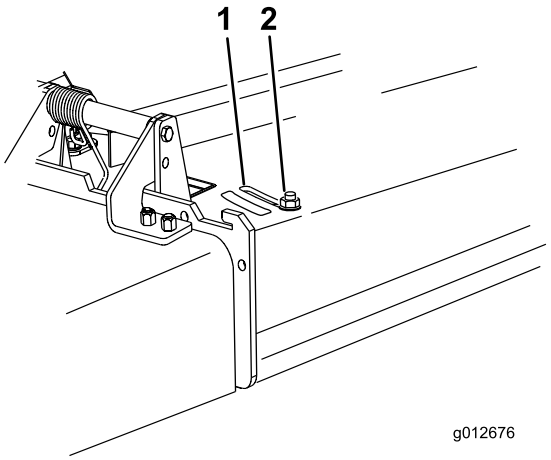

Figure 28

1. Slot
2. Nut

Positioning the Flow Baffle

The following figures are only recommendations for use. Adjustments will vary by grass type, moisture content, and height of grass.

Note: If the engine power draws down and the mower ground speed is the same, open up the baffle.

Position A

This is the full rear position (see Figure 29). The suggested use for this position is a follows.

- Use for short, light grass mowing conditions.
- Use in dry conditions.
- For smaller grass clippings.
- Propels grass clippings farther away from the mower.

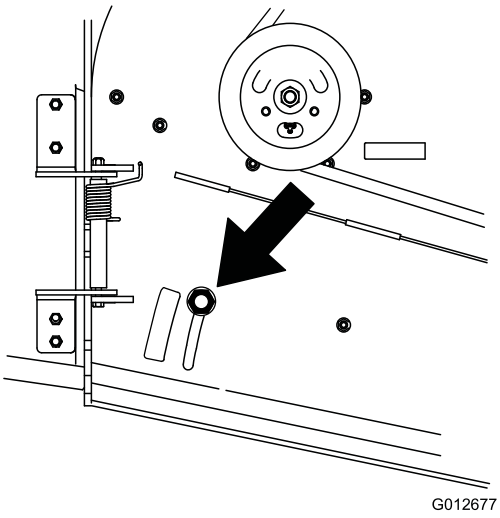

Figure 29

Position B

Use this position when bagging (Figure 30).

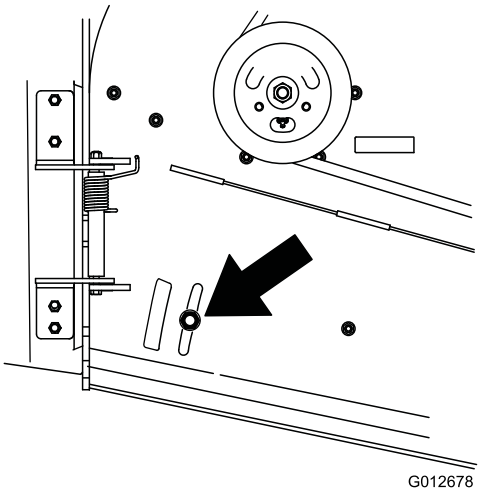

Figure 30

Position C

This is the full open position. The suggested use for this position is as follows (Figure 31).

- Use in tall, dense grass mowing conditions.
- Use in wet conditions.
- Lowers the engine power consumption.
- Allows increased ground speed in heavy conditions.

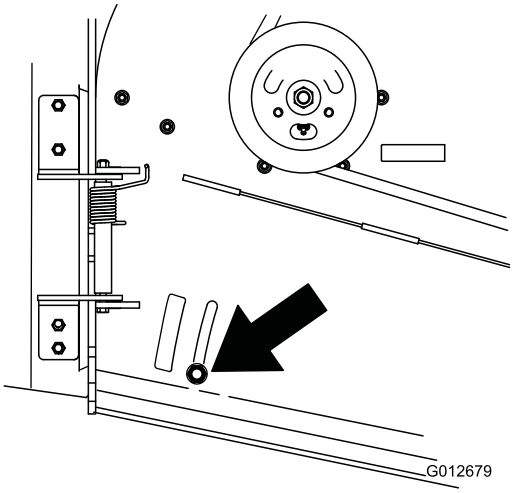

Figure 31

Using Counterweights

- Weights are installed to improve handling, balance and improve performance. Weights can be added or removed to create optimized performance under different mowing conditions and for operator preference.
- It is recommended that weights be added or removed one at a time until the desired handing and balance is achieved.

Note: Contact an Authorized Service Dealer to order a Weight Kit.

⚠ WARNING

Excessive weight changes can effect handling and operation of the machine. This could cause serious injury to you or bystanders.

Make weight changes in small increments only.

Evaluate the mower after each weight change to ensure the machine can be operated safely.

Maintenance

Note: Determine the left and right sides of the machine from the normal operating position.

Recommended Maintenance Schedule(s)

Maintenance Service Interval	Maintenance Procedure
After the first 8 hours	• Change the engine oil. • Check the hydraulic fluid level. • Change the hydraulic filter.
Before each use or daily	• Check the safety interlock system. • Check the engine oil level. • Clean the air intake screen. • Check the brakes. • Inspect the blades. • Clean the mower deck.
Every 25 hours	• Clean foam air cleaner element.
Every 50 hours	• Grease the mower deck idler arms (more often in dirty or dusty conditions). • Grease the lift linkage (more often in dirty or dusty conditions). • Lubricate the speed control sliding parts (more often in dirty or dusty conditions). • Clean the paper air cleaner element. • Check the tire pressure. • Check the hydraulic fluid level.
Every 100 hours	• Change the engine oil. (more often in dirty or dusty conditions) • Check, clean and regap the spark plug. • Check the battery. • Check and clean engine cooling fins and shrouds. • Check the pump drive belt. • Check the mower deck belt(s). • Check the hydraulic hoses.
Every 200 hours	• Replace the paper air cleaner element. • Change the engine oil filter.
Every 250 hours	• Change the hydraulic oil when using Mobil® 1 oil.
Every 500 hours	• Adjust the caster pivot bearing. • Check the electric clutch. • Change the hydraulic oil when using Toro® HYPR-OIL™ 500 hydraulic oil. • Change the hydraulic filter.
Before storage	• Paint chipped surfaces. • Perform all maintenance procedures listed above before storage.
Yearly	• Grease the front caster pivots (more often in dirty or dusty conditions). • Lubricate the caster wheel hubs. • Replace the fuel filter.

Important: **Refer to your *Engine Operator's Manual* for additional maintenance procedures.**

⚠ CAUTION

If you leave the key in the ignition switch, someone could accidently start the engine and seriously injure you or other bystanders.

Remove the key from the ignition and disconnect the spark plug wires from the spark plugs before you do any maintenance. Set the wires aside so that they do not accidentally contact the spark plugs.

Premaintenance Procedures

Raising the Mower for Access

The front of the mower can be raised and supported on its back for access under the machine for maintenance.

1. Raise the platform. Refer to Operating the Platform in Operation.
2. Remove the battery.

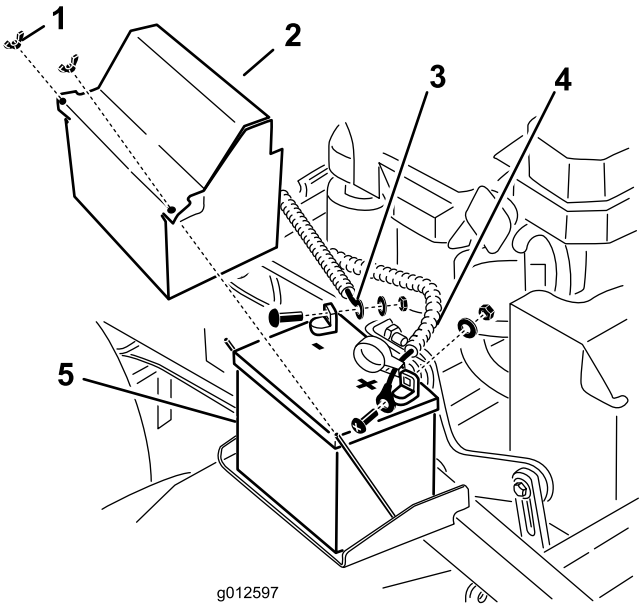

Figure 32

1. Wing nut
2. Battery cover
3. Negative battery cable
4. Positive battery cable
5. Battery

3. Drain the fuel from the fuel tank. Refer to Draining the Fuel Tank in Maintenance.
4. Remove the cap of the hydraulic tank and place a piece of plastic over the opening and install the hydraulic cap. This will seal the hydraulic tank and prevent it from leaking out.

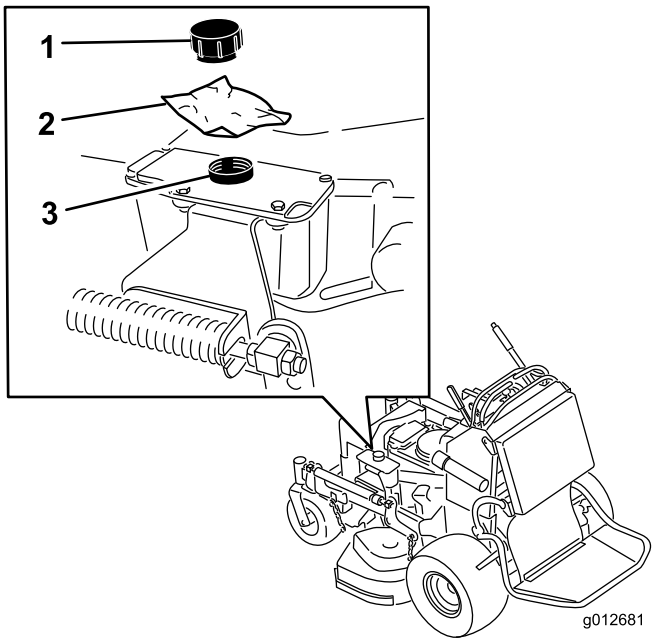

Figure 33

1. Cap
2. Piece of plastic
3. Hydraulic tank

5. With two people, raise the front of the mower so it rests on the drive tires and the platform in the up position.
6. Perform any maintenance on the machine.
7. With two people, lower the front of the mower to the ground.
8. Remove the plastic under the hydraulic tank cap.
9. Install the battery for the machine.

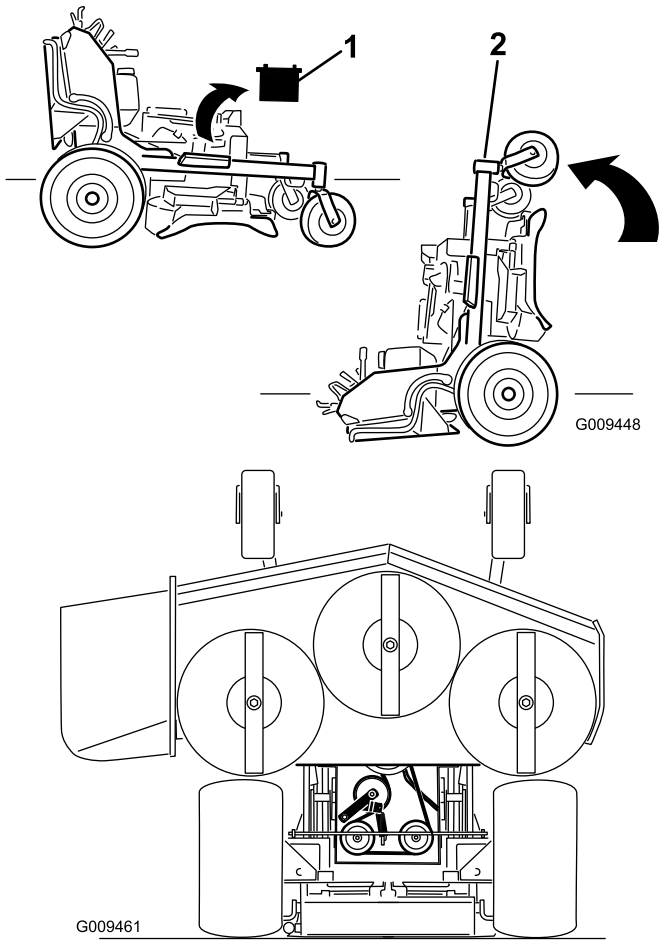

Figure 34

1. Remove battery
2. With two people, lift the front end of the mower (ensure the platform is up)

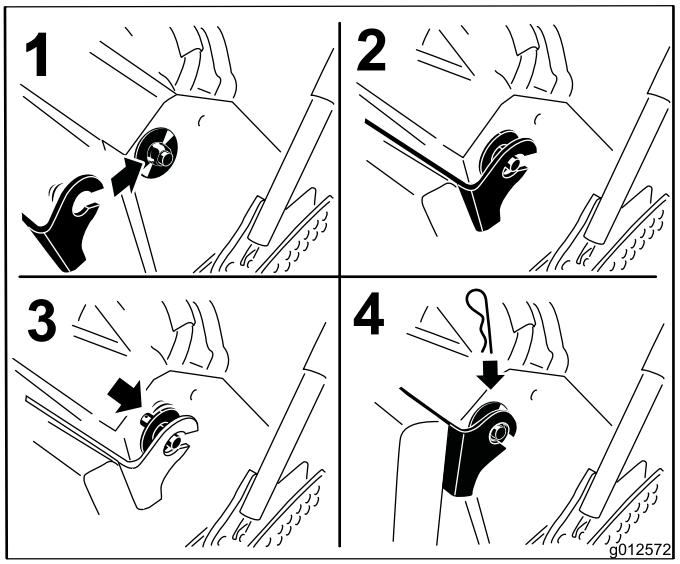

Figure 35

Release the Cushion for Rear Access

The cushion can be released for rear access to the machine for maintenance or adjustment.

1. Lower the platform.
2. Remove the hairpin cotter pins on each side of the cushion.
3. Slide the large washers with plastic bushings to the inside.
4. Remove the cushion and lower it to the platform.
5. Perform any maintenance or adjustment on the machine.
6. Raise the cushion and slide it onto the pins on both sides of the machine (Figure 35).
7. Slide the large washers with plastic bushings into the cushion bracket and secure them with a hairpin cotter pin (Figure 35).

Lubrication

Grease with No. 2 general purpose lithium base or molybdenum base grease.

Lubricate the speed/traction control linkage with a dry lubricant, PTFE(Polytetrafluoroethylene) (Figure 39).

How to Grease

1. Disengage the PTO and set the parking brake.
2. Stop the engine, remove the key, and wait for all moving parts to stop before leaving the operating position.
3. Clean the grease fittings with a rag. Make sure to scrape any paint off the front of the fitting(s).
4. Connect a grease gun to the fitting. Pump grease into the fittings until grease begins to ooze out of the bearings.
5. Wipe up any excess grease.

Lubricating the Machine

Service Interval: Every 50 hours—Grease the mower deck idler arms (more often in dirty or dusty conditions).

Every 50 hours—Grease the lift linkage (more often in dirty or dusty conditions).

Every 50 hours/Yearly (whichever comes first)—Lubricate the speed control sliding parts (more often in dirty or dusty conditions).

Use the following graphics for locating the grease points.

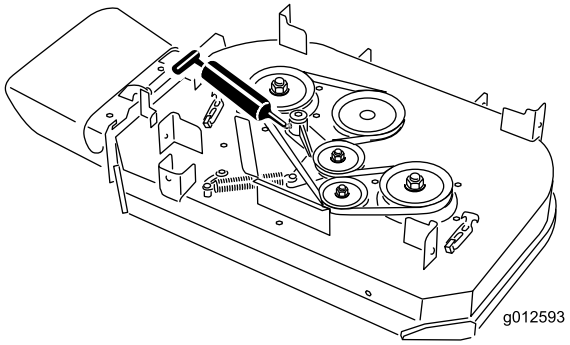

Figure 36
36in Mower Deck

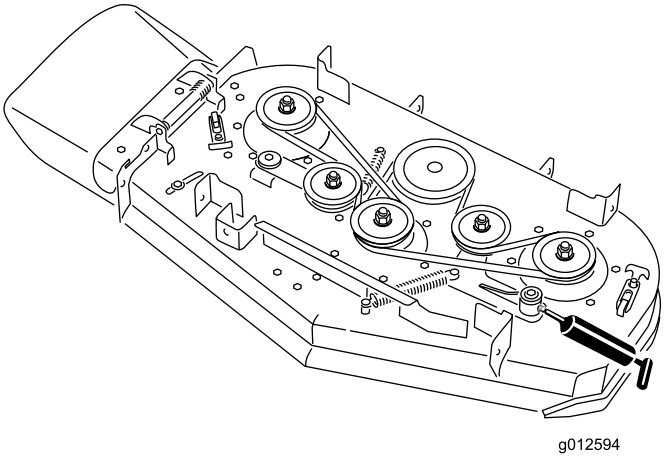

Figure 37
40in Mower Deck

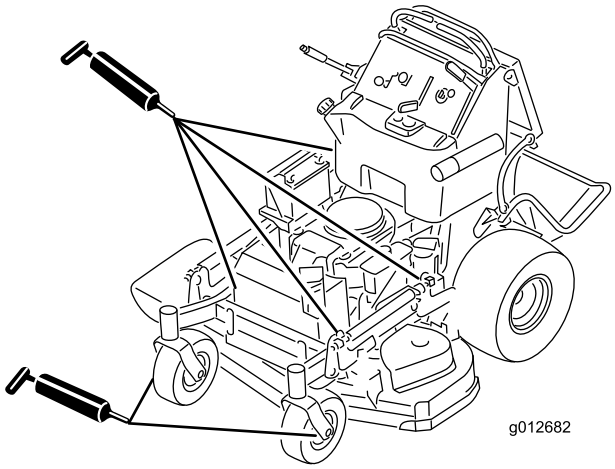

Figure 38

Lubricate the speed/traction control linkage with a dry PTFE (Polytetrafluoroethylene) lubricant.

Important: Use only a dry PTFE (Polytetrafluoroethylene) lubricant. Do not use a wet oil film, which will attract dust and dirt.

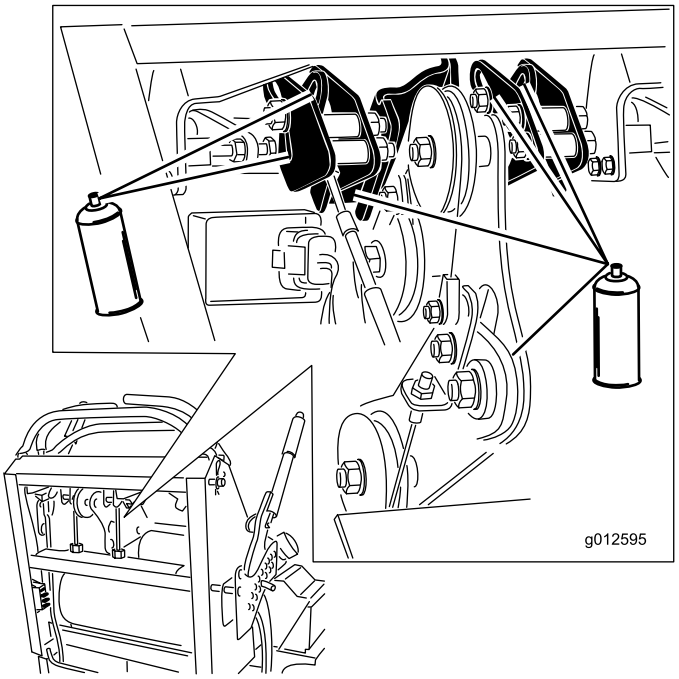

Figure 39

Greasing the Front Caster Pivots

Service Interval: Yearly—Grease the front caster pivots (more often in dirty or dusty conditions).

Lubricate the front caster pivots once a year.

1. Remove the dust cap and adjust the caster pivots. Keep the dust cap off until greasing is done. Refer to Adjusting the Caster Pivot Bearing in Maintenance Section.
2. Remove the hex plug. Thread a grease zerk into the hole.
3. Pump grease into the zerk until it oozes out around the top bearing.
4. Remove the grease zerk in the hole. Install the hex plug and cap.

Lubricate the Caster Wheel Hubs

Service Interval: Yearly—Lubricate the caster wheel hubs.

1. Stop the engine, wait for all moving parts to stop, and remove the key. Engage the parking brake.

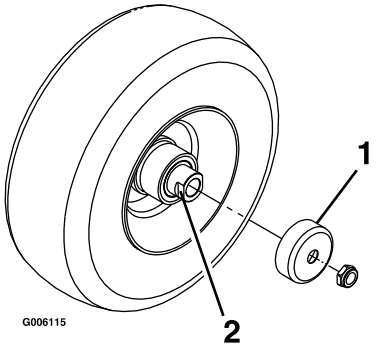

Figure 40

1. Seal guard
2. Spacer nut with wrench flats

2. Remove the caster wheel from the caster forks.
3. Remove the seal guards from the wheel hub.
4. Remove one of the spacer nuts from the axle assembly in the caster wheel. Note that thread locking adhesive has been applied to lock the spacer nuts to the axle. Remove the axle (with the other spacer nut still assembled to it) from the wheel assembly.
5. Pry out seals, and inspect bearings for wear or damage and replace if necessary.
6. Pack the bearings with a general-purpose grease.
7. Insert one bearing, one new seal into the wheel.

   Note: The seals must be replaced.
8. If the axle assembly has had both spacer nuts removed (or broken loose), apply a thread locking adhesive to one spacer nut and thread onto the axle with the wrench flats facing outward. Do Not thread spacer nut all of the way onto the end of the axle. Leave approximately 1/8 inch (3 mm) from the outer surface of the spacer nut to the end of the axle inside the nut.
9. Insert the assembled nut and axle into the wheel on the side of the wheel with the new seal and bearing.
10. With the open end of the wheel facing up, fill the area inside the wheel around the axle full of general-purpose grease.
11. Insert the second bearing and new seal into the wheel.
12. Apply a thread locking adhesive to the 2nd spacer nut and thread onto the axle with the wrench flats facing outward.

13. Torque the nut to 75-80 in-lb (8-9 N-m), loosen, then re-torque to 20-25 in-lb (2-3 N-m). Make sure axle does not extend beyond either nut.
14. Reinstall the seal guards over the wheel hub and insert wheel into caster fork. Reinstall caster bolt and tighten nut fully.

Important: To prevent seal and bearing damage, check the bearing adjustment often. Spin the caster tire. The tire should not spin freely (more than 1 or 2 revolutions) or have any side play. If the wheel spins freely, adjust torque on spacer nut until there is a slight amount of drag. Reapply thread locking adhesive.

Engine Maintenance

Servicing the Air Cleaner

Service Interval/Specification

Inspect the foam and paper elements and replace them if they are damaged or excessively dirty.

Note: Service the air cleaner more frequently (every few operating hours) if the operating conditions are extremely dusty or sandy.

Important: Do not oil the foam or paper element.

Removing the Foam and Paper Elements

1. Disengage the PTO and set the parking brake.
2. Stop the engine, remove the key, and wait for all moving parts to stop before leaving the operating position.
3. Clean around the air cleaner to prevent dirt from getting into the engine and causing damage (Figure 41).
4. Unscrew the cover knobs and remove the air cleaner cover (Figure 41).
5. Unscrew the hose clamp and remove the air cleaner assembly (Figure 41).
6. Carefully pull the foam element off the paper element (Figure 41).

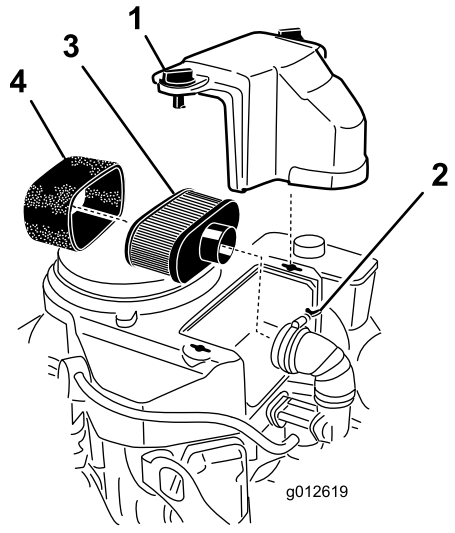

Figure 41

1. Cover
2. Hose clamp
3. Paper element
4. Foam element

Cleaning the Foam Air Cleaner Element

Service Interval: Every 25 hours

1. Wash the foam element in liquid soap and warm water. When the element is clean, rinse it thoroughly.
2. Dry the element by squeezing it in a clean cloth.

   Important: Replace the foam element if it is torn or worn.

Servicing the Paper Air Cleaner Element

Service Interval: Every 50 hours—Clean the paper air cleaner element.

Every 200 hours—Replace the paper air cleaner element.

1. Clean the paper element by tapping gently to remove dust. If it is very dirty, replace the paper element with a new one (Figure 41).
2. Inspect the element for tears, an oily film, or damage to the rubber seal.
3. Replace the paper element if it is damaged.

Installing the Foam and Paper Elements

Important: To prevent engine damage, always operate the engine with the complete foam and paper air cleaner assembly installed.

1. Carefully slide the foam element onto the paper air cleaner element (Figure 41).
2. Place the air cleaner assembly onto the air cleaner base or hose and secure it (Figure 41).
3. Place the air cleaner cover into position and tighten the cover knob (Figure 41).

Servicing the Engine Oil

Service Interval: Before each use or daily—Check the engine oil level.

After the first 8 hours—Change the engine oil.

Every 100 hours—Change the engine oil. (more often in dirty or dusty conditions)

Every 200 hours—Change the engine oil filter.

Note: Change the oil more frequently when the operating conditions are extremely dusty or sandy.

Note: There are different oil capacities for the different models listed in this manual. Ensure the correct amount of oil is used.

Important: Remember to add 80% of the oil and then gradually fill it to the full mark on the dipstick.

Oil Type: Detergent oil (API service SF, SG, SH, SJ or SL)

Engine Oil Capacity: 58 ounces (1.7 liter) with the filter removed; 51 ounces (1.5 liter) without the filter removed

Viscosity: Refer to the table below

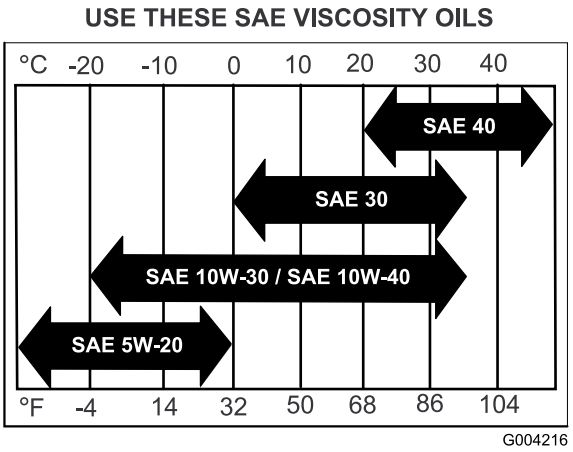

Figure 42

Checking the Engine Oil Level

Note: Check the oil when the engine is cold.

⚠ WARNING

Contact with hot surfaces may cause personal injury.

Keep hands, feet, face, clothing and other body parts away the muffler and other hot surfaces.

Important: Do not overfill the crankcase with oil because damage to the engine may result. Do not run engine with oil below the low mark because the engine may be damaged.

1. Disengage the PTO, move the motion control levers to the neutral locked position and set the parking brake.
2. Stop the engine, remove the key, and wait for all moving parts to stop before leaving the operating position (Figure 43).

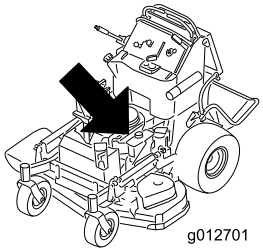

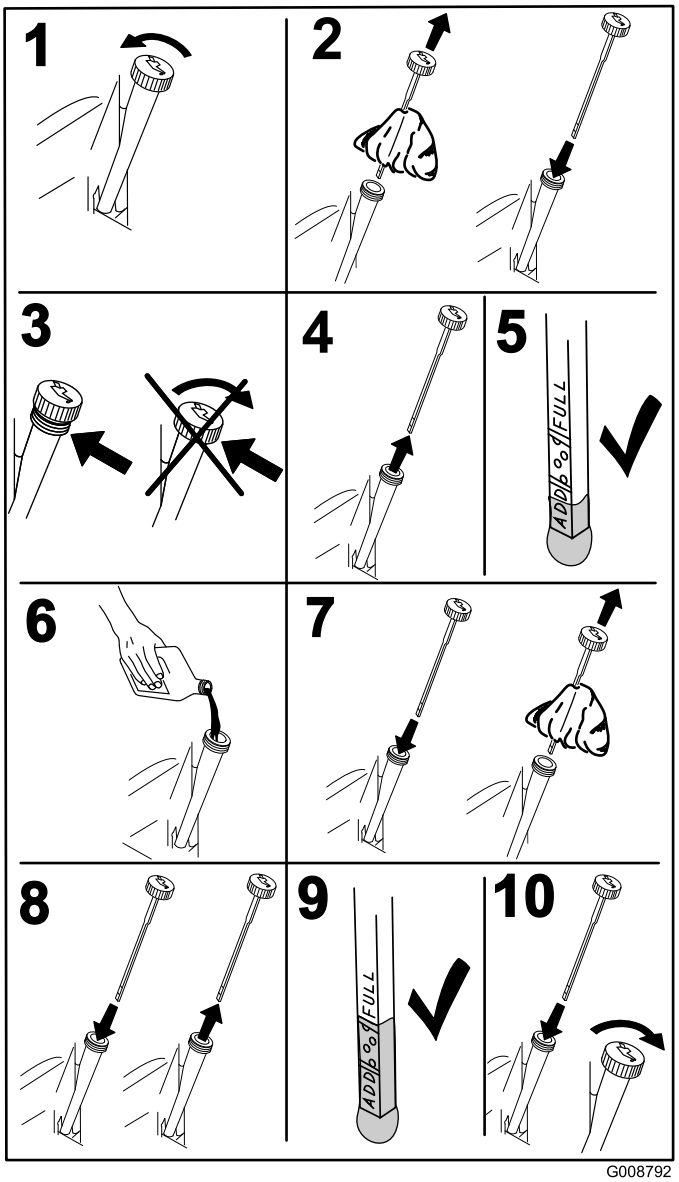

Figure 43

Changing the Engine Oil

Note: Dispose of the used oil at a recycling center.

1. Start the engine and let it run five minutes. This warms the oil so it drains better.
2. Park the machine so that the drain side is slightly lower than the opposite side to assure the oil drains completely.
3. Disengage the PTO, move the motion control levers to the neutral locked position and set the parking brake.
4. Stop the engine, remove the key, and wait for all moving parts to stop before leaving the operating position (Figure 44).

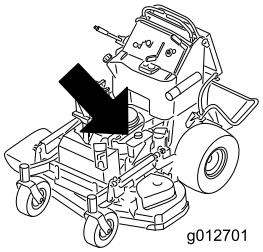

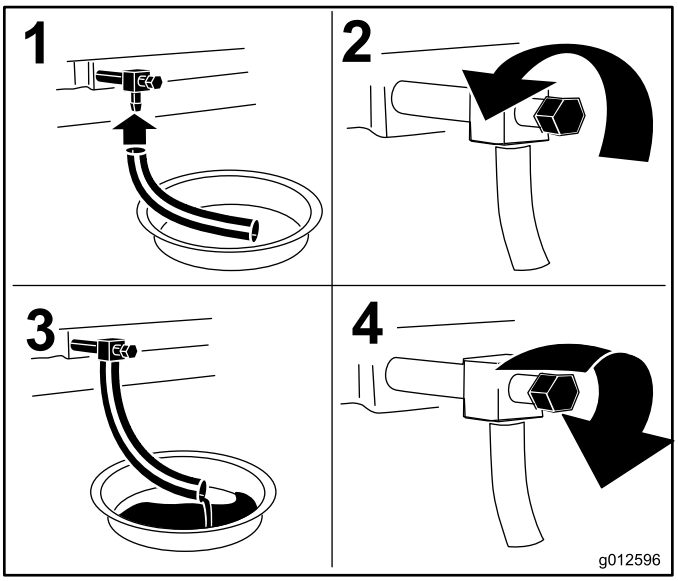

Figure 44

5. Slowly pour approximately 80% of the specified oil into the filler tube and slowly add the additional oil to bring it to the **Full** mark (Figure 45).

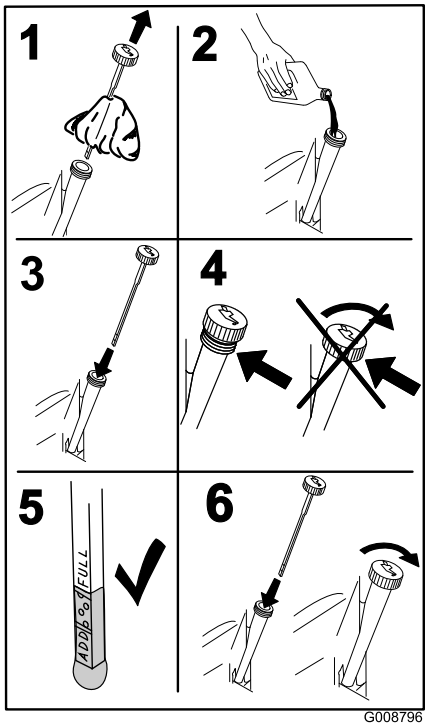

Figure 45

Changing the Engine Oil Filter

Note: Change the engine oil filter more frequently when operating conditions are extremely dusty or sandy.

1. Drain the oil from the engine; refer to Changing the Engine Oil.
2. Place a rag under the oil filter to soak up any spilled oil.

   Important: Spilled oil may drain under the engine and onto the clutch. Oil spilled on the clutch may damage the clutch, cause the blades to stop slowly when the clutch is switched off and cause the clutch to slip when the clutch is switched on. Wipe up any spilled oil.
3. Change the engine oil filter (Figure 46).

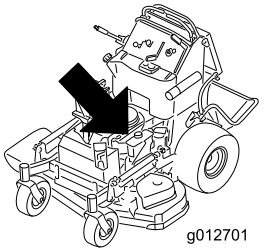

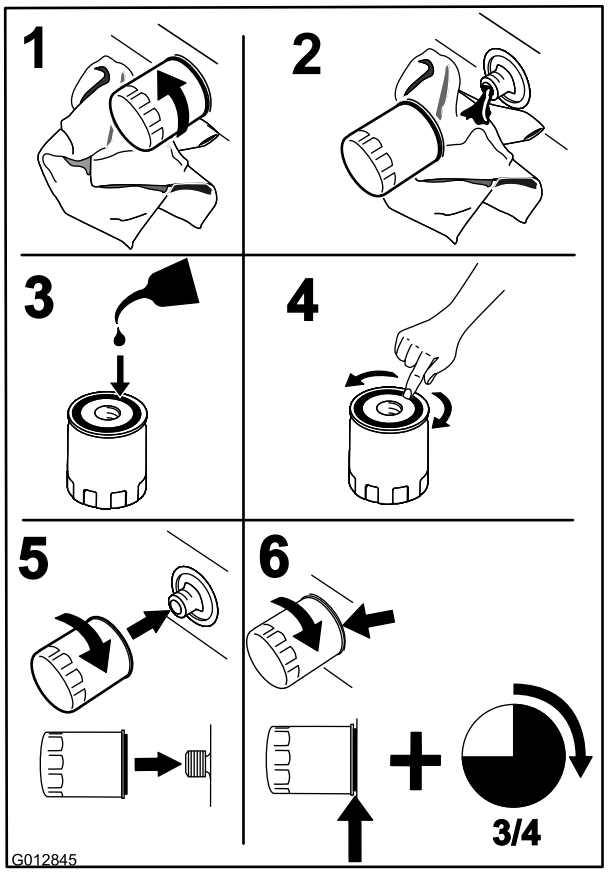

Figure 46

   Note: Ensure the oil filter gasket touches the engine and then an extra 3/4 turn is completed.
4. Fill the crankcase with the proper type of new oil; refer to Changing the Oil.

Servicing the Spark Plug

Service Interval: Every 100 hours

Make sure the air gap between the center and side electrodes is correct before installing the spark plug. Use a spark plug wrench for removing and installing the spark plug(s) and a gapping tool/feeler gauge to check and adjust the air gap. Install a new spark plug(s) if necessary.

Type for all Engines: NGK® BPR4ES or equivalent

Air Gap: 0.030 inch (0.75 mm)

Removing the Spark Plug

1. Disengage the PTO, move the motion control levers to the neutral locked position and set the parking brake.
2. Stop the engine, remove the key, and wait for all moving parts to stop before leaving the operating position.

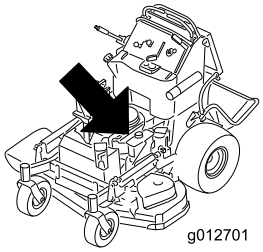

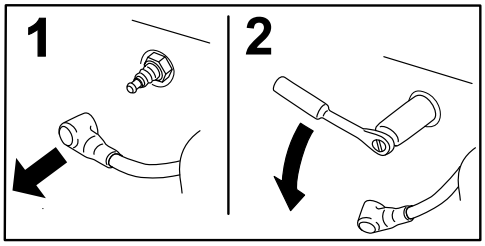

Figure 47

Checking the Spark Plug

Important: Never clean the spark plug(s). Always replace the spark plug(s) when it has: a black coating, worn electrodes, an oily film, or cracks.

If you see light brown or gray on the insulator, the engine is operating properly. A black coating on the insulator usually means the air cleaner is dirty.

Set the gap to 0.030 inches (0.75 mm).

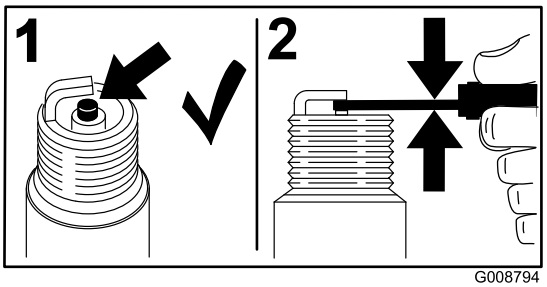

Figure 48

Installing the Spark Plug

Tighten the spark plug(s) to 16 ft.-lb (22 N-m).

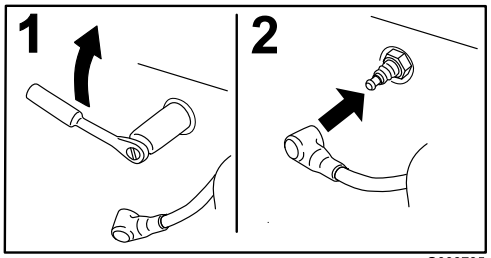

Figure 49

Fuel System Maintenance

Draining the Fuel Tank

Note: There is no other recommended way to drain fuel from the tank, other than using a syphon pump. A syphon pump can be purchased at a hardware store.

⚠ DANGER

In certain conditions, gasoline is extremely flammable and highly explosive. A fire or explosion from gasoline can burn you and others and can damage property.

- **Drain gasoline from the fuel tank when the engine is cold. Do this outdoors in an open area. Wipe up any gasoline that spills.**
- **Never smoke when draining gasoline, and stay away from an open flame or where a spark may ignite the gasoline fumes.**

1. Park the machine on a level surface. Disengage the power take off (PTO), set the parking brake, turn the ignition key to **Off** and remove the key.
2. Clean around the fuel cap to prevent debris from getting into the fuel tank (Figure 51).
3. Remove the fuel cap.
4. Insert a syphon pump into the fuel tank.
5. Using the syphon pump, drain the fuel into a clean gas can (Figure 50).
6. Wipe up any spilled fuel.

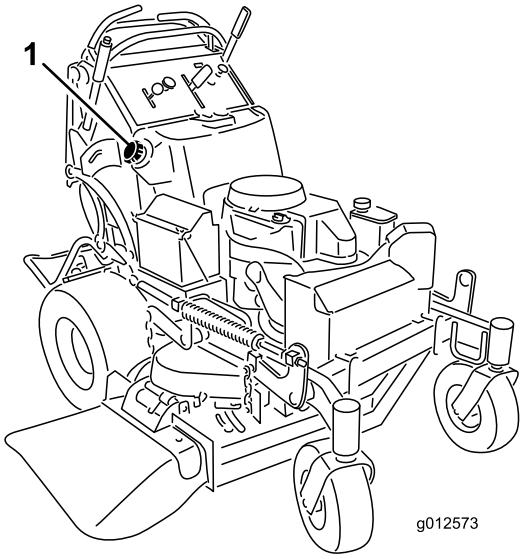

Figure 50

1. Fuel cap

Servicing the Fuel Filter

Replacing the Fuel Filter

Service Interval: Yearly

Never install a dirty filter if it is removed from the fuel line.

Note: Note how the fuel filter is installed in order to install the new filter correctly.

Note: Wipe up any spilled fuel.

1. Disengage the PTO and set the parking brake.
2. Stop the engine, remove the key, and wait for all moving parts to stop before leaving the operating position.
3. Close fuel shut-off valve.
4. Squeeze the ends of the hose clamps together and slide them away from the filter (Figure 51).

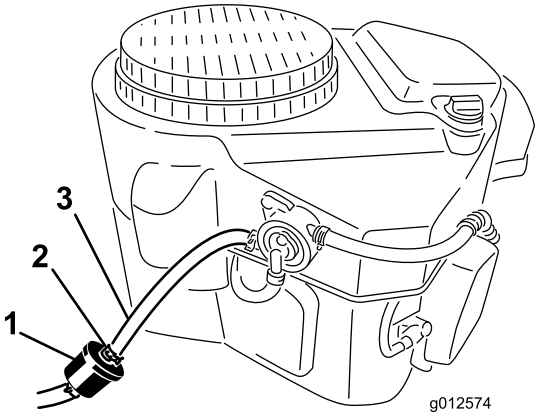

Figure 51

1. Fuel filter
2. Hose clamp
3. Fuel line

5. Remove the filter from the fuel lines.
6. Install a new filter and move the hose clamps close to the filter.
7. Open the fuel shut-off valve.
8. Check for fuel leaks and repair if needed.
9. Wipe up any spilled fuel.

Electrical System Maintenance

Servicing the Battery

Service Interval: Every 100 hours

Always keep the battery clean and fully charged. Use a paper towel to clean the battery case. If the battery terminals are corroded, clean them with a solution of four parts water and one part baking soda. Apply a light coating of grease to the battery terminals to prevent corrosion.

Voltage: 12 V

WARNING

CALIFORNIA
Proposition 65 Warning

Battery posts, terminals, and related accessories contain lead and lead compounds, chemicals known to the State of California to cause cancer and reproductive harm. Wash hands after handling.

⚠ DANGER

Battery electrolyte contains sulfuric acid which is a deadly poison and causes severe burns.

Do not drink electrolyte and avoid contact with skin, eyes or clothing. Wear safety glasses to shield your eyes and rubber gloves to protect your hands.

Removing the Battery

⚠ WARNING

Battery terminals or metal tools could short against metal machine components causing sparks. Sparks can cause the battery gasses to explode, resulting in personal injury.

- **When removing or installing the battery, do not allow the battery terminals to touch any metal parts of the machine.**
- **Do not allow metal tools to short between the battery terminals and metal parts of the machine.**

⚠ WARNING

Incorrect battery cable routing could damage the machine and cables causing sparks. Sparks can cause the battery gasses to explode, resulting in personal injury.

- **Always Disconnect the negative (black) battery cable before disconnecting the positive (red) cable.**
- **Always Reconnect the positive (red) battery cable before reconnecting the negative (black) cable.**

1. Disengage the PTO and set the parking brake.
2. Stop the engine, remove the key, and wait for all moving parts to stop before leaving the operating position.
3. Disconnect the negative battery cable from the negative (-) battery terminal (Figure 52).
4. Slide the red terminal boot off the positive (red) battery terminal. Then remove the positive (red) battery cable (Figure 52).
5. Remove the battery hold down plate (Figure 52) and remove the battery.

Installing the Battery

1. Place the battery onto the machine (Figure 52).
2. Secure the battery with the hold down plate, j-bolts, and locknuts.
3. First, install the positive (red) battery cable to positive (+) battery terminal with a nut, washer and bolt (Figure 52). Slide the rubber cover over the post.
4. Then install the negative battery cable and ground wire to the negative (-) battery terminal with a nut, washer and bolt (Figure 52).

   Note: The battery cables will crossover each other when the are correctly installed (Figure 52).

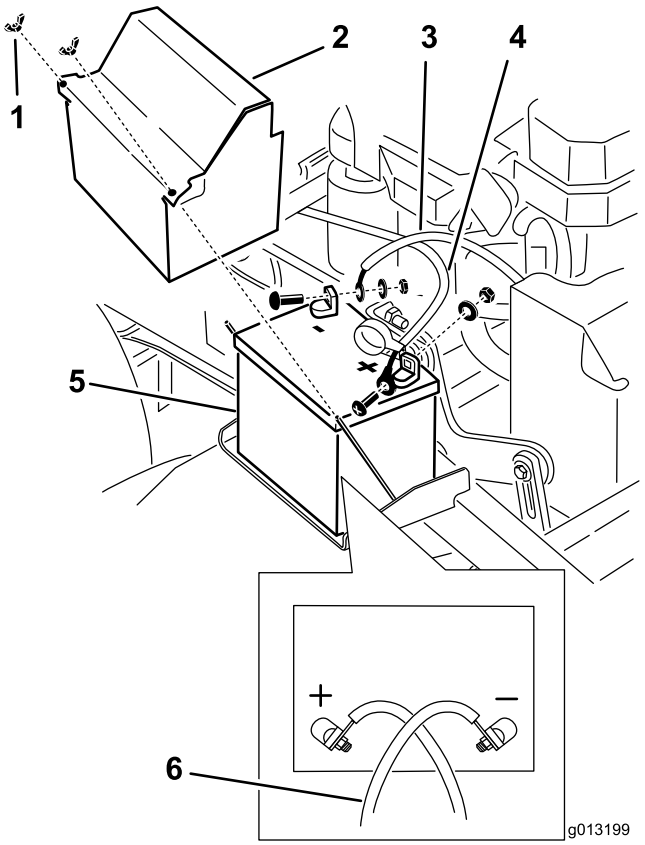

Figure 52

1. Wing nut
2. Battery cover
3. Negative battery cable
4. Positive battery cable
5. Battery
6. The battery cables cross when installed correctly

Charging the Battery

⚠ WARNING

Charging the battery produces gasses that can explode.

Never smoke near the battery and keep sparks and flames away from battery.

Important: Always keep the battery fully charged (1.265 specific gravity). This is especially important to prevent battery damage when the temperature is below 32°F (0°C).

1. Remove the battery from the chassis; refer to Removing the Battery.
2. Charge battery for 1 hour at 25 to 30 amps or 6 hours at 4 to 6 amps.
3. When the battery is fully charged, unplug the charger from the electrical outlet, then disconnect the charger leads from the battery posts (Figure 53).
4. Install the battery onto the machine and connect the battery cables, refer to Installing the Battery.

Note: Do not run the machine with the battery disconnected, electrical damage may occur.

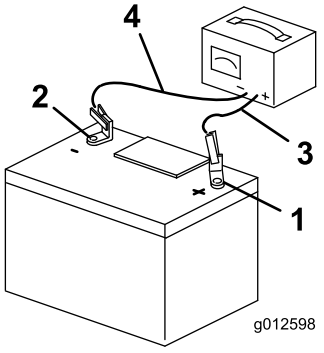

Figure 53

1. Positive Battery Post
2. Negative Battery Post
3. Red (+) Charger Lead
4. Black (-) Charger Lead

Servicing the Fuses

The electrical system is protected by fuses. It requires no maintenance. If a fuse blows, check the component or circuit for a malfunction or short.

1. Release the operator cushion from the rear of the machine.
2. Pull out on the fuse to remove and replace it (Figure 54).
3. Install the operator cushion.

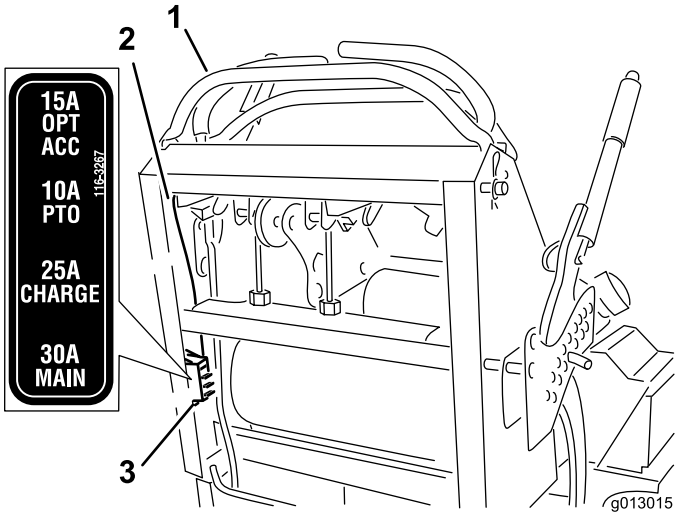

Figure 54

1. Controls
2. Wire
3. Fuses

Drive System Maintenance

Adjusting the Tracking

Note: Determine the left and right sides of the machine from the normal operating position.

1. While driving the machine, push both control levers forward the same distance.
2. Check if the machine tracks to one side. If it does, stop the machine and set the parking brake.
3. Release the operator cushion from the rear of the machine.
4. Rotate the right cable adjustment to position the right motion control in the center of the control panel neutral lock slot. Then, rotate the left cable adjustment in quarter-turn increments until the machine tracks straight (Figure 55).

   Note: Only adjust the left cable to match the left wheel speed to the right wheel speed. Do not adjust the right wheel speed as this will position the right motion control lever out of the center for the control panel neutral lock slot.
5. Check for proper tracking.

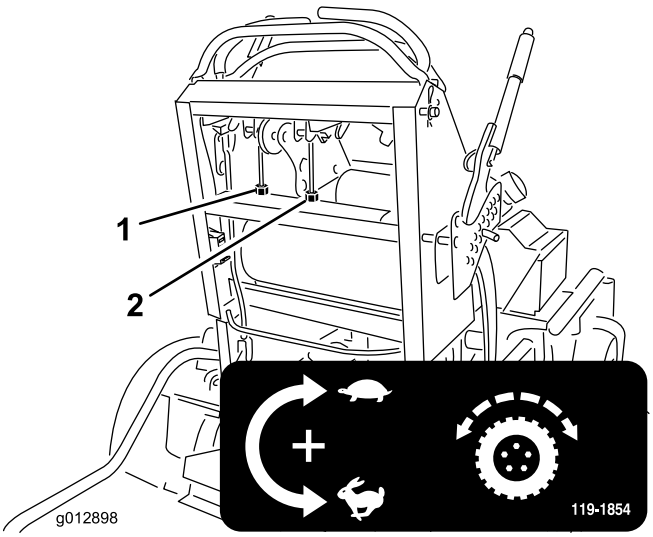

Figure 55

1. Left cable adjustment
2. Right cable adjustment

6. Repeat adjustment until the tracking is correct.
7. Check that the machine does not creep from neutral with the park brakes disengaged.

Important: Do Not rotate the linkage too far, as this may cause the machine to creep in neutral.

Checking the Tire Pressure

Service Interval: Every 50 hours/Monthly (whichever comes first)

Maintain the air pressure in the rear tires at 12-14 psi (83-97 kPa). Uneven tire pressure can cause an uneven cut.

Note: The front tires are semi-pneumatic tires and do not require air pressure maintenance.

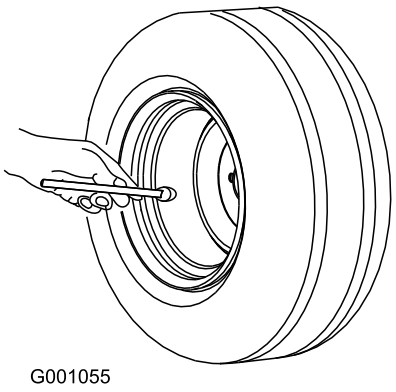

Figure 56

Adjusting the Caster Pivot Bearing

Service Interval: Every 500 hours/Yearly (whichever comes first)

1. Disengage the blade control switch (PTO), move the motion control levers to the neutral locked position and set the parking brake.
2. Stop the engine, remove the key, and wait for all moving parts to stop before leaving the operating position.
3. Remove the dust cap from caster and tighten lock nut (Figure 57).
4. Tighten the locknut until the spring washers are flat and then back off a 1/4 turn to properly set the pre-load on the bearings (Figure 57).

   Important: Make sure spring washers are installed correctly as shown in Figure 57.
5. Install the dust cap (Figure 57).

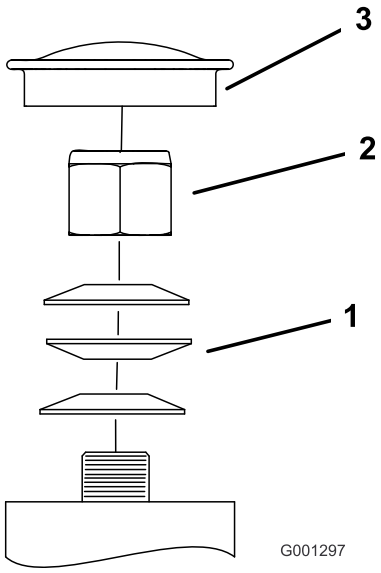

Figure 57

1. Spring Washers
2. Lock Nut
3. Dust Cap

Adjusting the Electric Clutch

Service Interval: Every 500 hours—Check the electric clutch.

The clutch is adjustable to ensure proper engagement and proper braking.

1. Insert a 0.015–0.021 inch (0.381–0.533 mm) feeler gauge through one inspection slot in the side of the assembly. Make sure it is between the armature and the rotor friction surfaces.

   The gap needs to be at least .015 inches (0.381 mm) and not more than .021 inches (0.533 mm).

2. If adjustment is needed, then set at .015 inches (0.381 mm) for each of the three adjustment slot positions. Tighten the lock nuts until there is slight binding on the feeler gauge but it can be moved easily within the air gap (Figure 58).
3. Repeat this for the remaining slots.
4. Check each slot again and make slight adjustments until the feeler gauge between the rotor and armature with very slight contact between them.

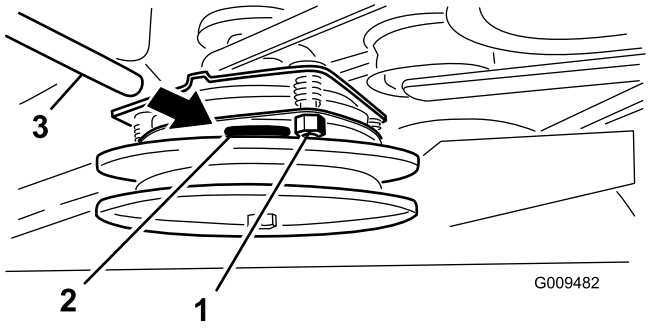

Figure 58

1. Adjusting nut
2. Slot
3. Feeler gauge

Cooling System Maintenance

Cleaning the Air Intake Screen

Service Interval: Before each use or daily

Before each use remove any build-up of grass, dirt or other debris from the cylinder and cylinder head cooling fins, air intake screen on flywheel end, and carburetor-governor levers and linkage. This will help insure adequate cooling and correct engine speed and will reduce the possibility of overheating and mechanical damage to the engine.

Cleaning the Cooling System

Service Interval: Every 100 hours—Check and clean engine cooling fins and shrouds.

1. Disengage the PTO and set the parking brake.
2. Stop the engine, remove the key, and wait for all moving parts to stop before leaving the operating position.
3. Remove the air intake screen and fan housing (Figure 59).
4. Clean the debris and grass from the engine parts.
5. Install air intake screen, recoil starter and fan housing (Figure 59).

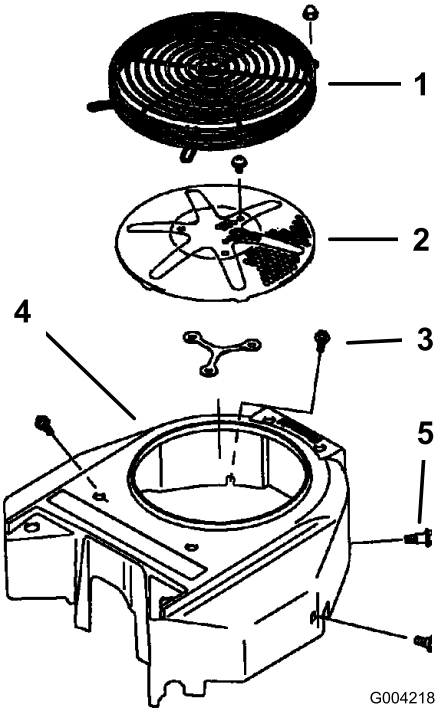

Figure 59

1. Guard
2. Engine air intake screen
3. Bolt
4. Fan housing
5. Screw

Brake Maintenance

Servicing the Brake

Before each use, check brakes on both a level surface and slope.

Always set the parking brake when you stop the machine or leave it unattended. If the parking brake does not hold securely, an adjustment is required.

Checking the Parking Brake

Service Interval: Before each use or daily

Important: Ensure the mower is on a level surface when checking and adjusting the brake.

1. Park the machine on a level surface, disengage the PTO.
2. Stop the engine, remove the key, and wait for all moving parts to stop before leaving the operating position.
3. Release the parking brake; refer to Releasing the Parking Brake in Operation.
4. With the brake released, measure the distance between the brake bar and the tire. The distance needs be between 3/16 and 5/16 inches (5 and 8 mm) (Figure 60). Refer to Adjusting the Parking Brake when adjustment is needed.

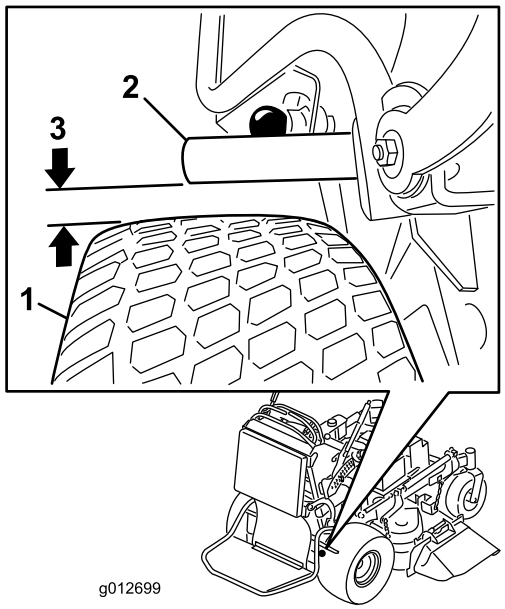

Figure 60

1. Tire
2. Brake bar
3. Gap between 3/16 and 5/16 inches (5 and 8 mm)

Adjusting the Brakes

If the gap between the brake bar and tire is not correct, an adjustment is required.

1. Park the machine on a level surface, disengage the PTO, and set the parking brake.
2. Stop the engine, remove the key, and wait for all moving parts to stop before leaving the operating position.
3. Release the parking brake; refer to Releasing the Parking Brake in Operation.
4. To adjust the brake, remove clevis pin and hairpin cotter pin from the lower brake lever and yoke (Figure 61).
5. Adjust the yoke. The distance between the brake bar and the tire needs be between 3/16 and 5/16 inches (5 and 8 mm). To tighten the brake, rotate the yoke up. To loosen the brake, rotate the yoke down (Figure 60).
6. Check the brake operation again; refer to Checking the Parking Brake.
7. Secure the yoke to lower brake lever with the clevis pin and hairpin cotter pin (Figure 61).

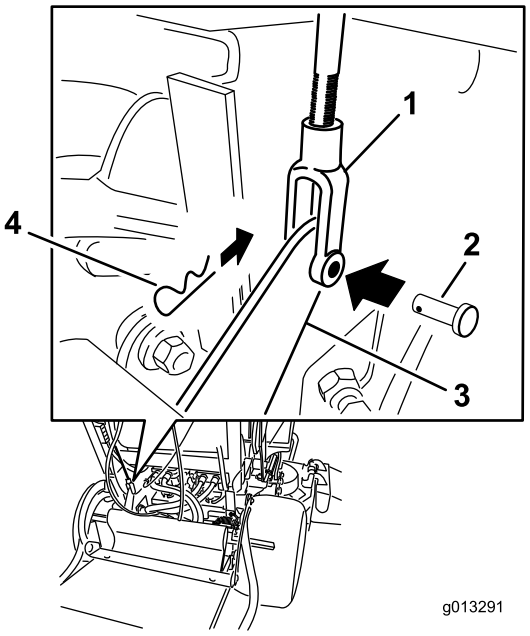

Figure 61

1. Yoke
2. Clevis pin
3. Lower brake lever
4. Hairpin cotter pin

Belt Maintenance

Checking the Belts

Service Interval: Every 100 hours—Check the pump drive belt.

Every 100 hours—Check the mower deck belt(s).

Check belts for cracks, frayed edges, burn marks, wear, signs of overheating or any other damage.

The signs of a worn mower belt are squealing while the belt is rotating, blades slipping while you are cutting grass, frayed belt edges, burn marks, and cracks. Replace the mower belt if you detect any of these signs.

Replacing the Mower Deck Belt for 36in Mowers

1. Disengage the PTO and set the parking brake.
2. Stop the engine, remove the key, and wait for all moving parts to stop before leaving the operating position.
3. Unlatch and remove the belt covers.
4. Remove the spring from the anchor post on the idler pulley arm (Figure 62).
5. Remove the worn mower belt (Figure 62).
6. Install the new mower belt around the clutch pulley, deck pulleys and idler pulley (Figure 62).
7. Install the spring onto the anchor post on the idler pulley arm (Figure 62).
8. Install the belt covers onto the cutting unit and secure the latches.

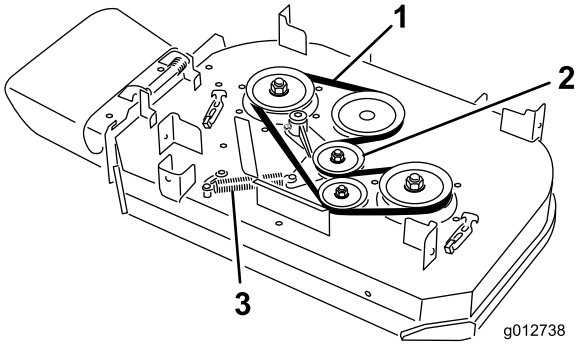

Figure 62

1. Belt
2. Spring loaded idler pulley
3. Spring

Replacing the Mower Deck Belts for 40in Mowers

Replacing the Right Mower Deck Belt

1. Disengage the PTO and set the parking brake.
2. Stop the engine, remove the key, and wait for all moving parts to stop before leaving the operating position.
3. Unlatch and remove the right belt cover.
4. Remove the spring from the anchor post on the idler pulley arm (Figure 62).
5. Remove the worn mower belt (Figure 62).
6. Install the new mower belt around the deck pulleys and idler pulley (Figure 62).
7. Install the spring onto the anchor post on the idler pulley arm (Figure 62).
8. Install the belt cover onto the cutting unit and secure the latch.

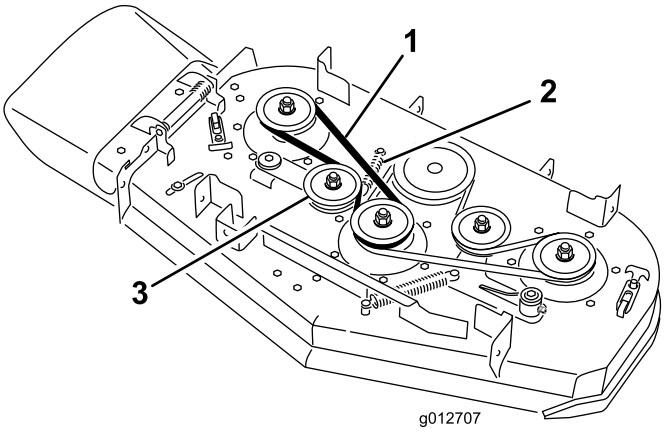

Figure 63

1. Belt
2. Spring
3. Spring loaded idler pulley

Replacing the Left Mower Deck Belt

1. Disengage the PTO and set the parking brake.
2. Stop the engine, remove the key, and wait for all moving parts to stop before leaving the operating position.
3. Unlatch and remove the belt covers.
4. To remove the left mower belt, the right mower belt needs to be removed first. Refer to Replacing the Right Mower Belt.

5. Remove the spring from the anchor post on the idler pulley arm (Figure 62).
6. Remove the worn mower belt (Figure 62).
7. Install the new mower belt around the deck pulleys, clutch pulley and idler pulley (Figure 62).
8. Install the spring onto the anchor post (Figure 62).
9. Install the right mower belt. Refer to Replacing the Right Mower Belt.
10. Install the belt covers onto the cutting unit and secure the latches.

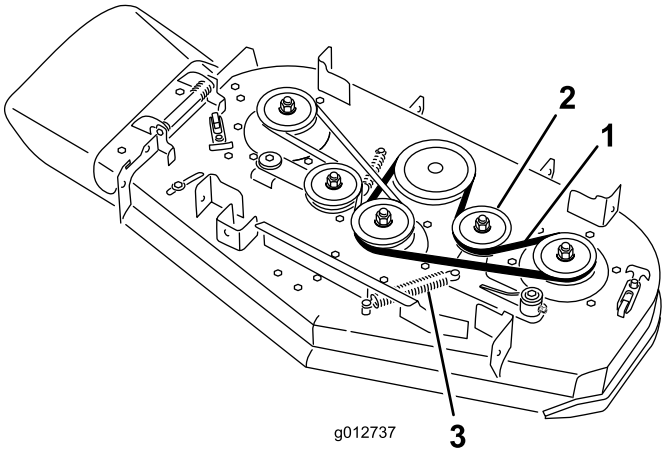

Figure 64

1. Belt
2. Spring loaded idler pulley
3. Spring

Replacing the Pump Drive Belt

1. Disengage the PTO and set the parking brake.
2. Stop the engine, remove the key, and wait for all moving parts to stop before leaving the operating position.
3. Remove the mower deck belt from the clutch on 30in mower decks or remove the left mower belt from the clutch for 40in mower decks. Refer to Replacing the Mower Deck Belts.
4. Tilt the machine on it's back. Refer to Pre-Maintenance at the beginning of the Maintenance Section.
5. Unhook the idler spring from the frame (Figure 65).
6. Install the new belt around engine pump drive pulley and the two pump pulleys.
7. Install the idler spring to the frame (Figure 65).

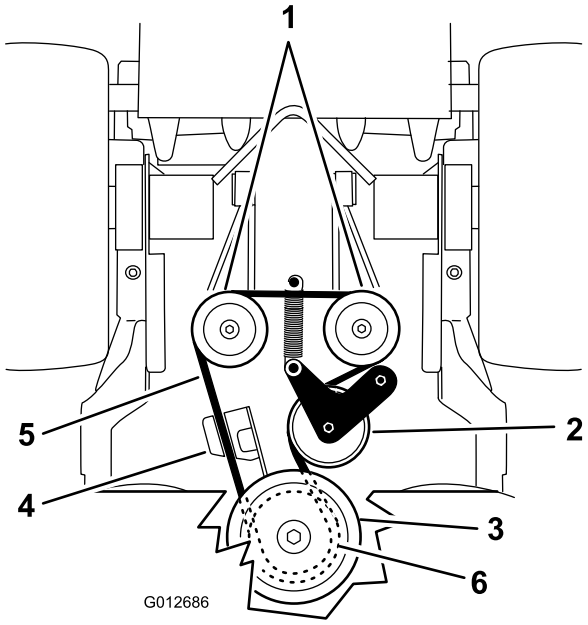

Figure 65

1. Hydraulic pumps
2. Idler pulley
3. Clutch pulley
4. Clutch retainer
5. Pump drive belt
6. Pump drive pulley

8. Lower the machine to the operating position. Refer to PreMaintenance at the beginning of the Maintenance Section.
9. Install the mower deck belt to the clutch on 30in mower decks or install the left mower belt install the clutch for 40in mower decks. Refer to Replacing the Mower Deck Belts.

Adjusting the Motion Control Handle Positions

Adjusting the Right Side Motion Control Lever

If the motion control levers do not align horizontally, adjust the right side motion control lever.

Note: Adjust the horizontal alignment before the front to back alignment.

1. Disengage the PTO, move the right side motion control lever to the neutral position and set the parking brake.
2. Stop the engine, remove the key, and wait for all moving parts to stop before leaving the operating position.
3. Push the right motion control lever down out of locked neutral position (Figure 66).
4. Check if it aligns horizontally with the left motion control lever (Figure 66).

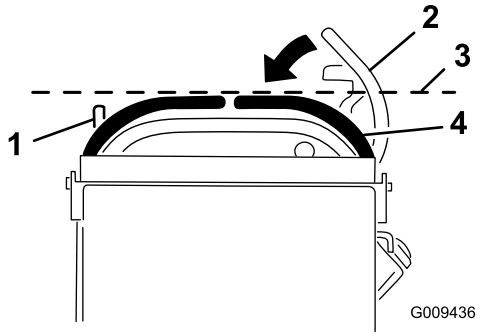

Figure 66

1. Left motion control lever
2. Right motion control lever in neutral locked position
3. Check the horizontal alignment here
4. Right motion control lever

5. To adjust the right motion control lever horizontally, the cam needs to be adjusted.
6. Remove the cushion from the rear of the machine.
7. Loosen the nut holding the cam (Figure 67).
8. Adjust the cam until the right motion control lever aligns with the left motion control lever and tighten the nut and bolt for the cam.

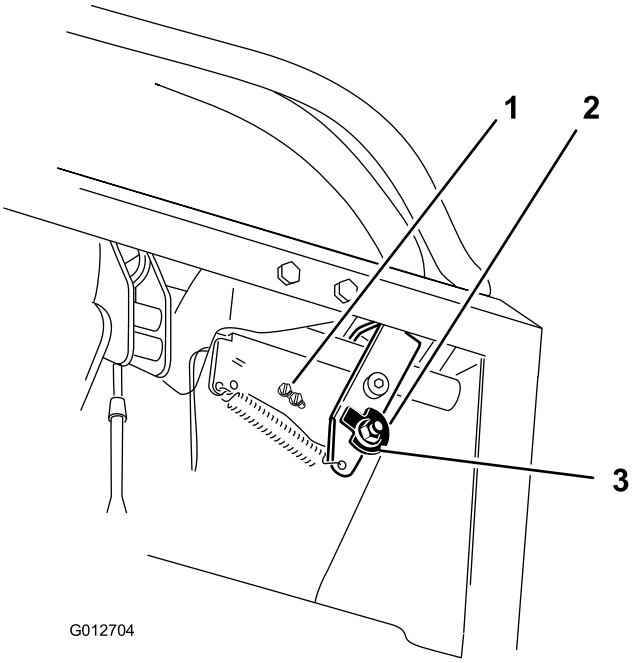

Figure 67

1. Switch screws
2. Cam
3. Nut

9. After the cam is adjusted, the lever switch needs to be checked.
10. Check the gap between the control lever and switch as shown in Figure 68. The gap needs to be an 1/8 inch (3mm) with the right motion control lever in the neutral, unlocked position.
11. If needed, loosen the screws holding the switch and adjust the switch (Figure 67 and Figure 68).

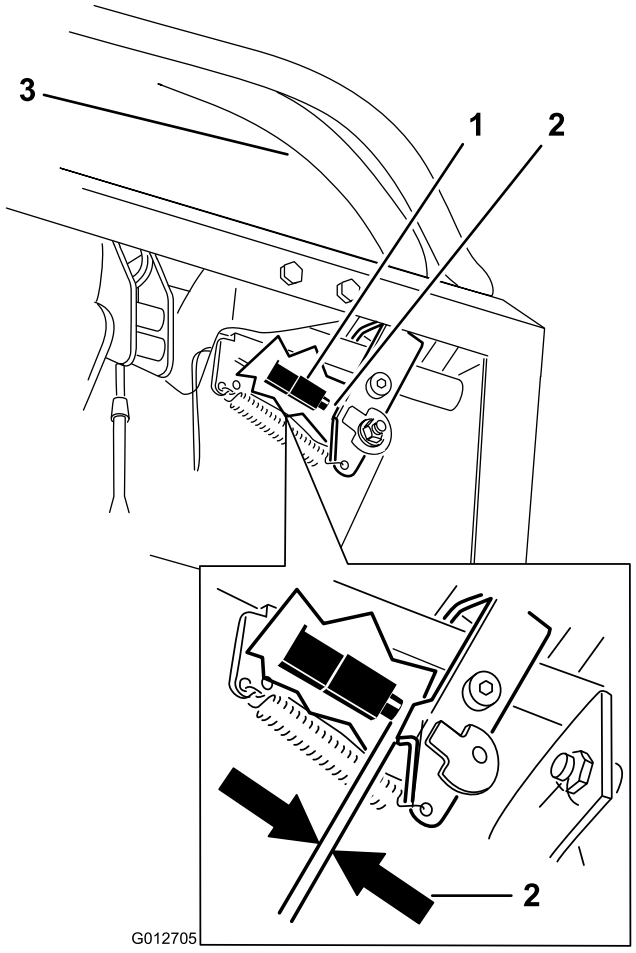

Figure 68

1. Switch (on front side)
2. 1/8 inch (3mm)
3. Right motion control lever in the neutral unlocked position

12. Tighten the switch screws.

Adjusting the Neutral Postion for the Motion Control Levers

Important: Ensure the tracking of the mower is correct after adjusting the motion control levers. Adjusting the tracking and aligning the motion control levers front to back is the same procedure (Figure 69).

Note: Adjust the horizontal alignment before the front to back alignment.

If the motion control levers do not align front to back, or the right side control lever does not move easily into the neutral lock position, adjustment is required.

1. After the horizontal alignment is finished, check the front to back alignment by slightly pushing the control levers forward to take up any slack in the linkage for the control levers (Figure 69).

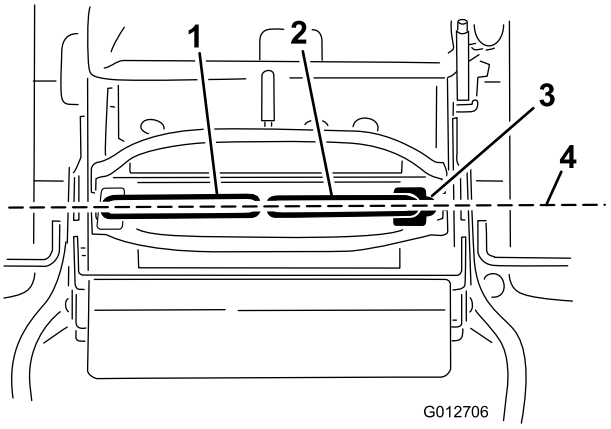

Figure 69

1. Left motion control lever
2. Right motion control lever
3. Neutral locked position
4. Align the control levers front to back

2. Ensure the right motion control lever moves easily into the neutral lock position.

   Note: Turn the cable adjustment clockwise to move the motion control handle forward. Turn the cable adjustment counter-clockwise to move the motion control handle rearward.

3. Rotate the cable adjustment on right side when adjustment is needed. Adjust the cable adjustment in quarter-turn increments.
4. After the right motion control lever moves easily into the neutral lock position, adjust the left motion control lever to align with the right motion control lever.
5. Check for proper tracking. Refer to Adjusting the Tracking in the Maintenance Section.

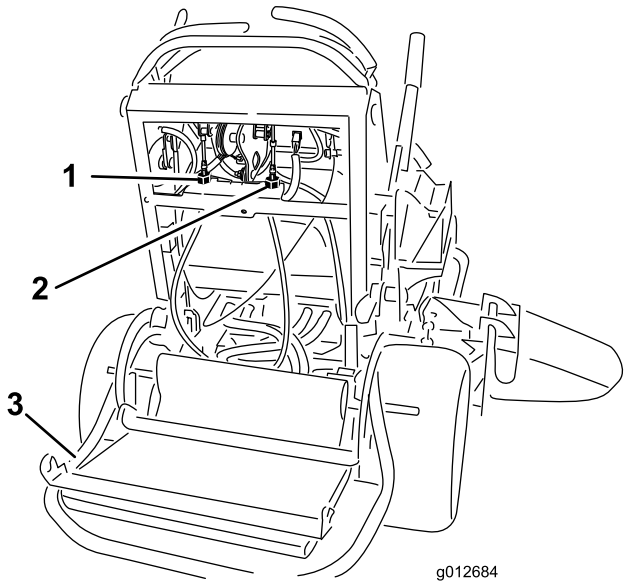

Figure 70

1. Left cable adjustment
2. Right cable adjustment
3. Platform down

Hydraulic System Maintenance

Servicing the Hydraulic System

Hydraulic Oil Type: Toro® HYPR-OIL™ 500 hydraulic oil or Mobil® 1 15W-50 synthetic motor oil.

Important: Use oil specified or equivalent. Other fluids could cause system damage.

Hydraulic System Oil Capacity: 67 oz. (2.0 l)

Checking the Hydraulic Fluid

Service Interval: After the first 8 hours
Every 50 hours

Hydraulic Oil Type: Toro® HYPR-OIL™ 500 hydraulic oil or Mobil® 1 15W-50 synthetic motor oil.

Important: Use oil specified or equivalent. Other fluids could cause system damage.

Hydraulic System Oil Capacity: 67 oz. (2.0 l)

Note: There are two ways of checking the hydraulic oil. One is when the oil is warm and one is when the oil is cold. The baffle inside the tank has two levels depending if the oil is warm or cold.

1. Position machine on a level surface.
2. Disengage the power take off (PTO) and shut off the engine.
3. Wait for all moving parts to stop before leaving the operating position and then set the parking brake.
4. Clean area around cap and filler neck of hydraulic tank (Figure 71).

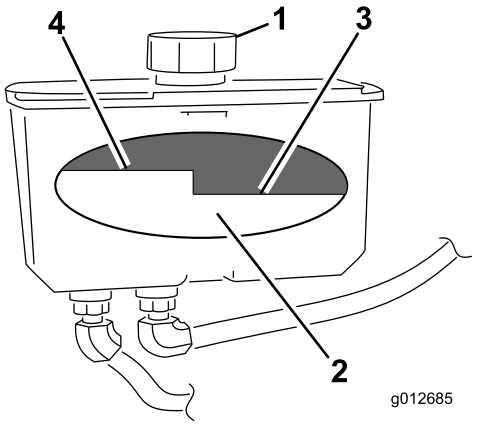

Figure 71

1. Cap
2. Baffle
3. Cold fluid level-full
4. Hot fluid level-full

5. Remove cap from filler neck. Look inside to check the fluid level in the reservoir. (Figure 71).
6. Add fluid to the reservoir until it reaches the cold level of the baffle.
7. Run the machine at low idle for 15 minutes to allow any air to purge out of the system and warm fluid. Refer to Starting and Stopping the Engine.
8. Recheck the fluid level while the fluid is warm. If required, add fluid to the reservoir until it reaches the hot level of the baffle.

   Note: The fluid level should be to the top of the hot level of the baffle, when the fluid is warm (Figure 71).
9. Install cap on filler neck.

⚠ WARNING

Hydraulic fluid escaping under pressure can penetrate skin and cause injury.

- **If hydraulic fluid is injected into the skin it must be surgically removed within a few hours by a doctor familiar with this type of injury. Gangrene may result if this is not done.**
- **Keep body and hands away from pin hole leaks or nozzles that eject high pressure hydraulic fluid.**
- **Use cardboard or paper to find hydraulic leaks.**
- **Safely relieve all pressure in the hydraulic system before performing any work on the hydraulic system.**
- **Make sure all hydraulic fluid hoses and lines are in good condition and all hydraulic connections and fittings are tight before applying pressure to hydraulic system.**

Replacing the Hydraulic Fluid

Service Interval: Every 250 hours—Change the hydraulic oil when using Mobil® 1 oil.

Every 500 hours—Change the hydraulic oil when using Toro® HYPR-OIL™ 500 hydraulic oil.

⚠ WARNING

Hot hydraulic fluid can cause severe burns.

Allow the hydraulic fluid to cool before performing any maintenance to the hydraulic system.

1. Disengage the PTO and set the parking brake.
2. Stop the engine and wait for all moving parts to stop before leaving the operating position.
3. Remove hydraulic reservoir cap.
4. Locate the front hydraulic hose under the hydraulic tank and place drain pan under the tank (Figure 72).
5. Loosen the hose clamp and move it down the hose.
6. Remove the front hydraulic hose and allow the fluid to run out of the tank.

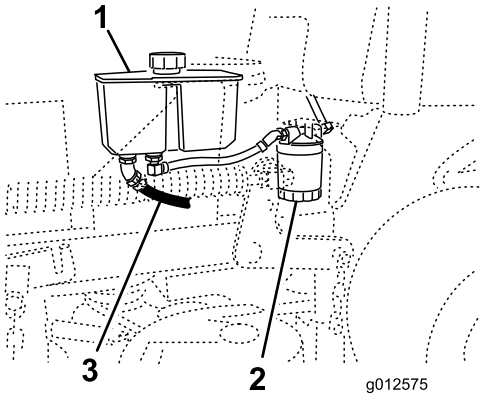

Figure 72

1. Hydraulic tank
2. Hydraulic filter
3. Front hydraulic hose

7. Change the hydraulic filter. Refer to Replacing the Hydraulic Filter.
8. Connect the hydraulic hose under the tank.
9. Add fluid to the tank until it reaches the cold baffle of the tank.

   Important: Use oil specified or equivalent. Other fluids could cause system damage.
10. Install the hydraulic tank cap.
11. Start engine and let run for about two minutes to purge air from the system. Stop the engine and check for leaks. If one or both wheels will not drive, refer to Bleeding Hydraulic System.
12. Check the level of the fluid and add fluid, if required. **Do not overfill.**

Replacing the Hydraulic Filter

Service Interval: After the first 8 hours

Every 500 hours/Yearly (whichever comes first)

⚠ WARNING

Hot hydraulic fluid can cause severe burns.

Allow the hydraulic fluid to cool before performing any maintenance to the hydraulic system.

1. Disengage the PTO and set the parking brake.
2. Stop the engine and wait for all moving parts to stop before leaving the operating position.

   Important: Do not substitute automotive oil filter or severe hydraulic system damage may result.

3. Locate the filter and place drain pan under filter (Figure 73).

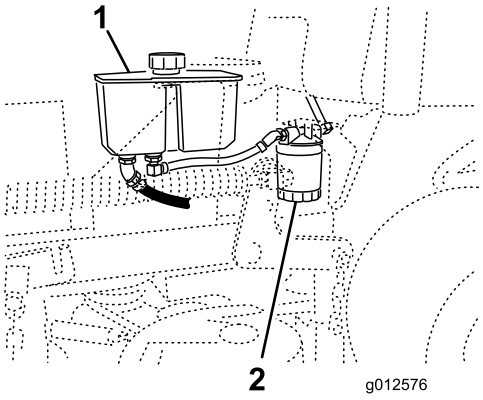

Figure 73

1. Hydraulic tank
2. Hydraulic filter

4. Remove the old filter and wipe the filter adapter gasket surface clean (Figure 74).
5. Apply a thin coat hydraulic fluid to the rubber gasket on the replacement filter.
6. Install replacement hydraulic filter onto the filter adapter. Turn the oil filter clockwise until the rubber gasket contacts the filter adapter, then tighten the filter an additional 1/2 turn (Figure 74).

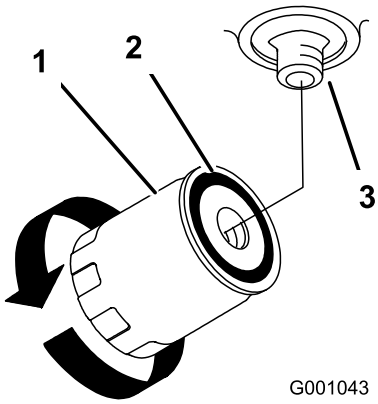

Figure 74

1. Hydraulic filter
2. Gasket
3. Adapter

7. Clean up any spilled fluid.
8. Check the fluid in the reservoir, add fluid to the tank until it reaches the cold baffle of the tank.

   Important: Use oil specified or equivalent. Other fluids could cause system damage.

9. Start engine and let run for about two minutes to purge air from the system. Stop the engine and check for leaks. If one or both wheels will not drive, refer to Bleeding Hydraulic System.
10. Recheck level and add fluid, if required. **Do not overfill.**

Bleeding the Hydraulic System

The traction system is self bleeding, however, it may be necessary to bleed the system if fluid is changed or after work is performed on the system.

1. Disengage the PTO and set the parking brake.
2. Stop the engine and wait for all moving parts to stop before leaving the operating position.
3. Raise the rear of the machine up onto jack stands high enough to raise the drive wheels off the ground.
4. Start the engine and move the throttle control to idle position.

   If the drive wheel does not rotate, it is possible to assist the purging of the system by carefully rotating the tire in the forward direction.

5. Check the hydraulic fluid level as it drops add fluid as required to maintain the proper level.
6. Repeat this procedure for the opposite wheel.
7. Thoroughly clean the area around each of the charge pump housings.

Checking the Hydraulic Lines

Service Interval: Every 100 hours

Check hydraulic hoses and hoses for leaks, loose fittings, kinked hoses, loose mounting supports, wear, weather and chemical deterioration. Make necessary repairs before operating.

Note: Keep areas around hydraulic system clean from grass and debris build up.

⚠ WARNING

Hydraulic fluid escaping under pressure can penetrate skin and cause injury.

- **If hydraulic fluid is injected into the skin it must be surgically removed within a few hours by a doctor familiar with this type of injury. Gangrene may result if this is not done.**
- **Keep body and hands away from pin hole leaks or nozzles that eject high pressure hydraulic fluid.**
- **Use cardboard or paper to find hydraulic leaks.**
- **Safely relieve all pressure in the hydraulic system before performing any work on the hydraulic system.**
- **Make sure all hydraulic fluid hoses and hoses are in good condition and all hydraulic connections and fittings are tight before applying pressure to hydraulic system.**

Mower Deck Maintenance

Servicing the Cutting Blades

To ensure a superior quality of cut, keep the blades sharp. For convenient sharpening and replacement, you may want to keep extra blades on hand.

⚠ WARNING

A worn or damaged blade can break, and a piece of the blade could be thrown into the operator's or bystander's area, resulting in serious personal injury or death.

- **Inspect the blades periodically for wear or damage.**
- **Replace a worn or damaged blade.**

Before Inspecting or Servicing the Blades

Park the machine on a level surface, disengage the blades and set the parking brake. Turn the ignition key to off. Remove the key and disconnect the spark plug wires from the spark plugs.

Inspecting the Blades

Service Interval: Before each use or daily

1. Inspect the cutting edges (Figure 75). If the edges are not sharp or have nicks, remove and sharpen the blades. Refer to Sharpening the Blades.
2. Inspect the blades, especially the curved area. If you notice any cracks, wear, or a slot forming in this area immediately install a new blades (Figure 75).

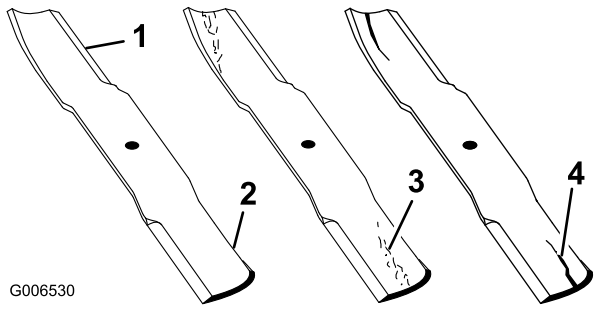

Figure 75

1. Cutting Edge
2. Curved Area
3. Wear/slot Forming
4. Crack

Checking for Bent Blades

1. Disengage the PTO, move the motion control levers to the neutral locked position and set the parking brake.
2. Stop the engine, remove the key, and wait for all moving parts to stop before leaving the operating position.
3. Rotate the blades until the ends face forward and backward. Measure from a level surface to the cutting edge, position **A**, of the blades (Figure 76). Note this dimension.

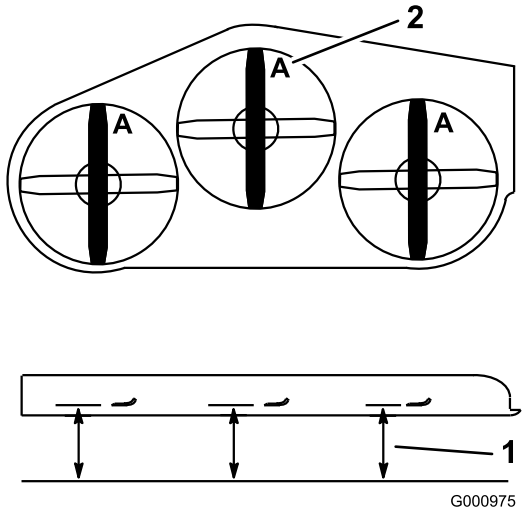

Figure 76

1. Measure here from blade to hard surface
2. Position A

4. Rotate the opposite ends of the blades forward.
5. Measure from a level surface to the cutting edge of the blades at the same position as in step 3 above. The difference between the dimensions obtained in steps 3 and 4 must not exceed 1/8 inch (3 mm). If this dimension exceeds 1/8 inch (3 mm), the blade is bent and must be replaced; refer to Removing the Blades and Installing the Blades.

⚠ WARNING

A blade that is bent or damaged could break apart and could seriously injure or kill you or bystanders.

- **Always replace bent or damaged blade with a new blade.**
- **Never file or create sharp notches in the edges or surfaces of blade.**

Removing the Blades

Blades must be replaced if a solid object is hit, if the blade is out of balance or is bent. To ensure optimum performance and continued safety conformance of the machine, use genuine Toro replacement blades. Replacement blades made by other manufacturers may result in non-conformance with safety standards.

1. Hold the blade end using a rag or thickly-padded glove.
2. Remove the blade bolt, curved washer, and blade from the spindle shaft (Figure 77).

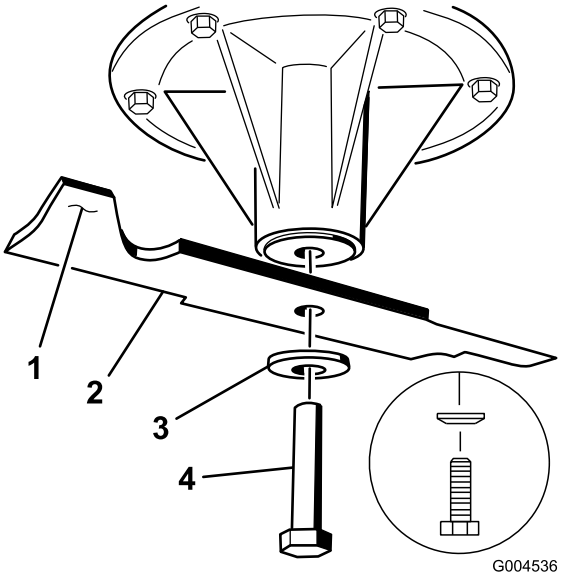

Figure 77

1. Sail Area of Blade
2. Blade
3. Curved washer
4. Blade Bolt

Sharpening the Blades

1. Use a file to sharpen the cutting edge at both ends of the blade (Figure 78). Maintain the original angle. The blade retains its balance if the same amount of material is removed from both cutting edges.

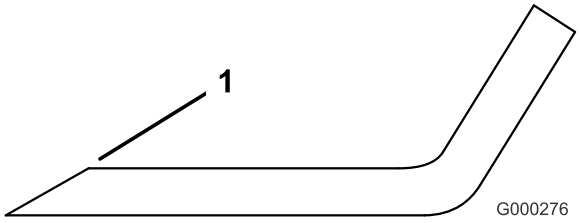

Figure 78

1. Sharpen at original angle

2. Check the balance of the blade by putting it on a blade balancer (Figure 79). If the blade stays in a horizontal position, the blade is balanced and can be used. If the blade is not balanced, file some metal off the end of the sail area only (Figure 77). Repeat this procedure until the blade is balanced.

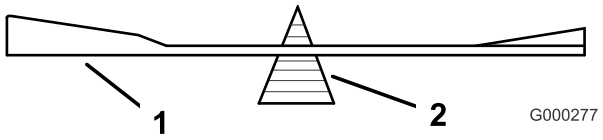

Figure 79

1. Blade
2. Balancer

Installing the Blades

1. Install the blade onto the spindle shaft (Figure 80).

   Important: The curved part of the blade must be pointing upward toward the inside of the mower to ensure proper cutting.

2. Install the spring disk and blade bolt. The spring disk cone must be installed toward the bolt head (Figure 80). Torque the blade bolt to 85-110 ft-lb (115-150 N-m).

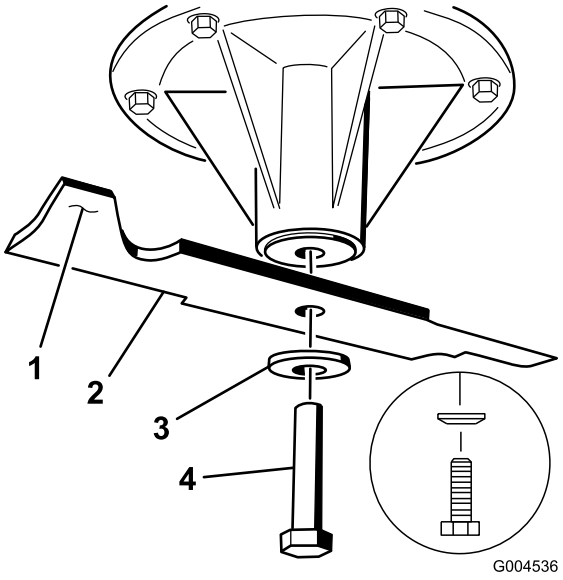

Figure 80

1. Sail Area of Blade
2. Blade
3. Spring Disk
4. Blade Bolt
5. Cone Towards Bolt Head

Leveling the Mower

Preparing the Machine

1. Position mower on a flat surface.
2. Disengage the PTO, move the motion control levers to the neutral locked position and set the parking brake.
3. Stop the engine, remove the key, and wait for all moving parts to stop before leaving the operating position.
4. Check the tire pressure of both drive tires. If needed, adjust to 13 psi (90 kPa)
5. Lower the mower to the 3 inch (76 mm) height-of-cut position.

   Note: The actual cutting height will not be adjusted until the deck has been leveled. Refer to Adjusting Height of Cut.

6. Check the distance between the swivels, measure at the center of the swivels (center-to-center length) on the threaded rod. This length needs to be 19-1/2 inches (49.5 cm) for 36in mower decks and 17-3/16 inches (43.7 cm) for 40in mower decks (Figure 81).
7. Inspect the four chains. The chains need to have tension.
8. If either rear chain is loose, the length of the threaded rod on that side will need to be adjusted to get equal tension on both rear chains.
9. Use the jam nuts at the front swivel to adjust the length between front and rear swivels on that side (Figure 81).
10. If either front chain is loose, loosen the nut on the upper chain bolt and the jam nut on the adjustment bolt.
11. Use the adjustment bolt to get equal tension on both front chains (Figure 81).
12. Tighten the nut on the upper chain bolt and the jam nut on the adjustment bolt.

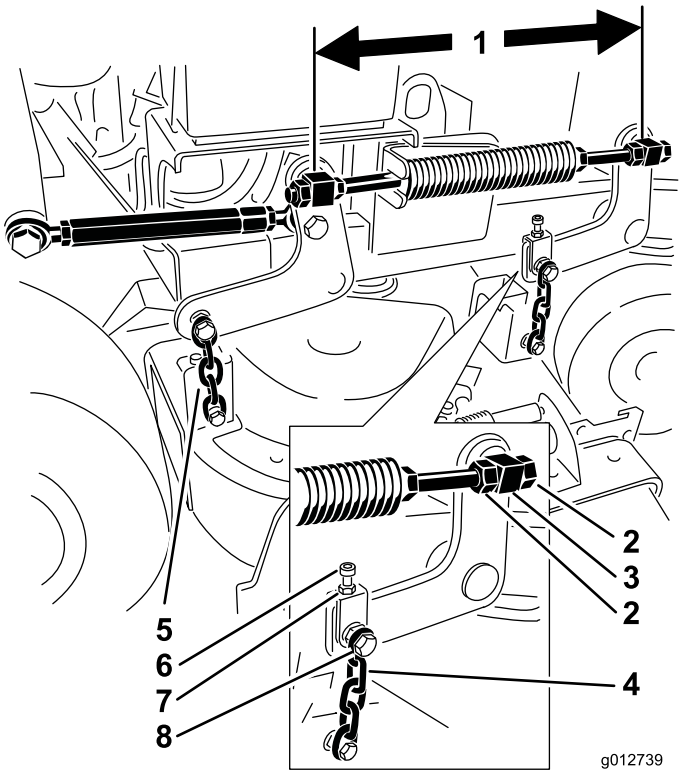

Figure 81

1. Measure here at the center of the swivels (center-to-center length)
2. Swivel jam nuts
3. Front swivel
4. Front chain
5. Rear chain
6. Adjustment bolt
7. Jam Nut
8. Upper chain bolt

Adjusting the Left Side Front-to-Rear Mower Pitch

1. Position the left blade front-to-rear
2. Measure the left blade at the **A** location, from a level surface to the cutting edge of the blade tip and record this measurement (Figure 82).
3. Measure the left blade at the **B** location, from a level surface to the cutting edge of the blade tip and record this measurement (Figure 82).
4. The mower blade should be a 1/4 to 3/8 inch (6 to 10 mm) lower at position **A** than at position **B** (Figure 82). If it is not correct, proceed to the following steps.
5. Loosen the nut on the upper chain bolt and the jam nut on the adjustment bolt (Figure 81).
6. Use the adjustment bolt to achieve 1/4 to 3/8 inch (6 to 10 mm) lower in front at **A** than in the rear at **B** (Figure 81).
7. Tighten the nut on the upper chain bolt and the jam nut on the adjustment bolt.

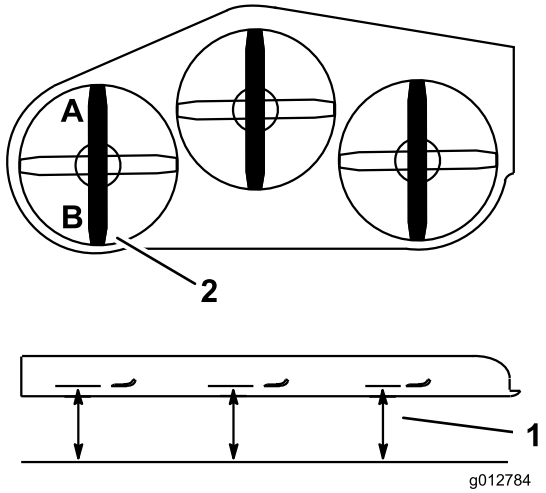

Figure 82

1. Measure here from the blade to a hard surface
2. Measure at A and B

Leveling the Mower Side-to-Side

1. Position the left blade front-to-rear (Figure 83).
2. Measure the left blade at the **A** location, from a level surface to the cutting edge of the blade tip and record this measurement (Figure 83).
3. Position the right blade front-to-rear (Figure 83).
4. Measure the right blade at the **C** location, from a level surface to the cutting edge of the blade tip and record this measurement (Figure 83).
5. The measurement between location **A** and **C** needs to be within 1/8 inch. If it is not correct, adjust the front chain at location **C** to achieve the correct height.

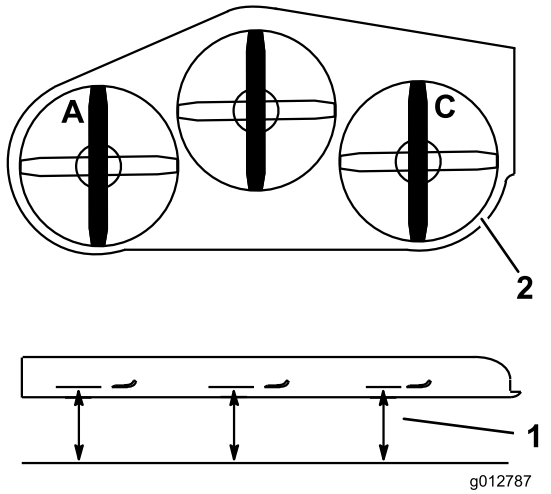

Figure 83

1. Measure here from blade to hard surface
2. Measure at A and C

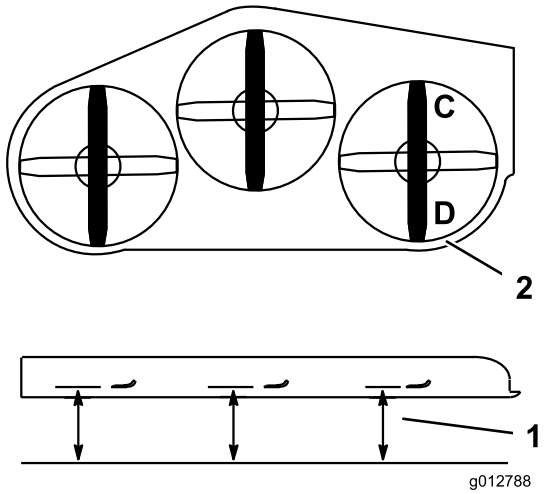

Figure 84

1. Measure here from blade to hard surface
2. Measure at C and D

Adjusting the Right Side Front-to-Rear Mower Pitch

1. Position the right blade front-to-rear (Figure 84).
2. Measure the right blade at the **C** location, from a level surface to the cutting edge of the blade tip and record this measurement (Figure 84).
3. Measure the right blade at the **D** location, from a level surface to the cutting edge of the blade tip and record this measurement (Figure 84).
4. The mower blade should be a 1/4 to 3/8 inch (6 to 10 mm) lower at position **C** than at position **D** (Figure 84). If it is not correct, proceed to the following steps.
5. The length of the threaded rod on the right side will need to be adjusted to achieve proper front-to-rear pitch.
6. Use the jam nuts at the front swivel to adjust the length between front and rear swivels on that side.
7. Check to make sure there is equal tension on all four chains. To get equal tension on all four chains, make minor adjustments to maintain proper deck pitch.

Adjusting the Height of Cut

1. Lower the mower to the 3 inch (76 mm) height-of-cut position.
2. Position the left blade front-to-rear (Figure 83).
3. Measure the left blade at the **A** location, from a level surface to the cutting edge of the blade tip and record this measurement (Figure 83).
4. Position the right blade front-to-rear (Figure 83).
5. Measure the right blade at the **C** location, from a level surface to the cutting edge of the blade tip and record this measurement (Figure 83).
6. The measurement between location **A** and **C** needs to be within an 1/8 inch of the 3 inch (76mm) height-of-cut setting. If it is not correct, proceed to the following steps.
7. Loosen the jam nuts at both ends of the turnbuckle (Figure 85).

   Note: The end of the turnbuckle with the groove machined in it has left hand threads (Figure 85).
8. Adjust the turnbuckle to raise or lower the deck height to achieve 3 inches at locations **A** and **C**.
9. Tighten the jam nuts at both ends of the turnbuckle.

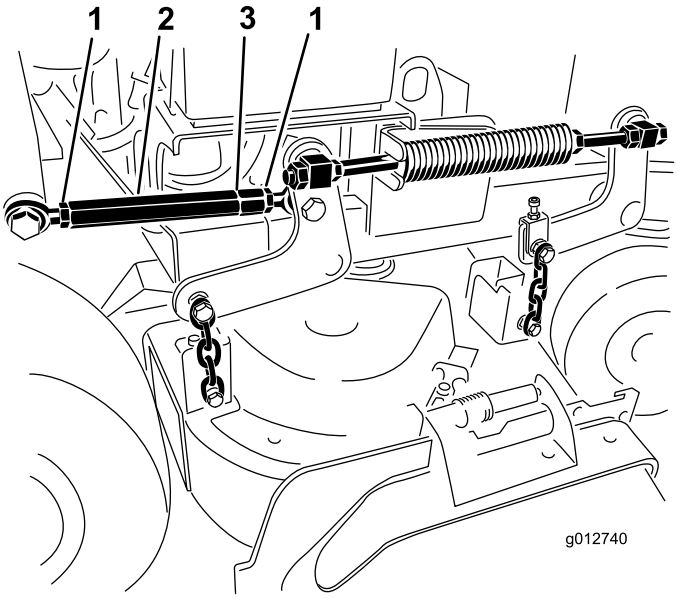

Figure 85

1. Jam nut
2. Turnbuckle
3. Groove indicating left hand threads

Adjusting the Compression Spring

Note: Adjusting the compression spring will alter how much the deck will float and how much effort it takes to lift the deck when using the height-of-cut handle.

- More spring compression will reduce the handle lift force required and cause the deck to float more.
- Less spring compression will increase the handle lift force required and cause the deck to float less.

1. Raise the deck lift lever and lock into the transport position.
2. Check the length of the compression spring. Nominal length is 11-1/8 inches (28.2 cm) for 36 inch mower decks and 10-1/8 inches (25.7 cm) for 40 inch mower decks (Figure 86).
3. Adjust this distance, by loosening the spring jam nut and turning the nut in front of each spring (Figure 86).
4. Lock the nut into position by tightening the spring jam nut (Figure 86).

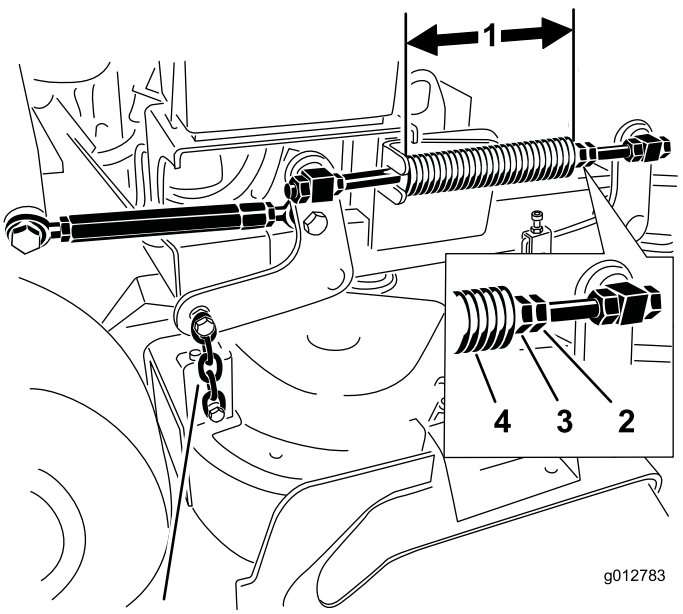

Figure 86

1. 10-1/8 inch (25.7 cm) for 40in mower decks and 11-1/8 inch (28.2 cm) for 36in mower decks
2. Spring jam nut
3. Front nut
4. Compression spring

Replacing the Grass Deflector

⚠ WARNING

An uncovered discharge opening could allow the lawn mower to throw objects in the operator's or bystander's direction and result in serious injury. Also, contact with the blade could occur.

Never operate the lawn mower unless you install a cover plate, a mulch plate, grass deflector or bagger.

1. Remove the locknut, bolt, spring and spacer holding the deflector to the pivot brackets (Figure 87). Remove damaged or worn grass deflector.

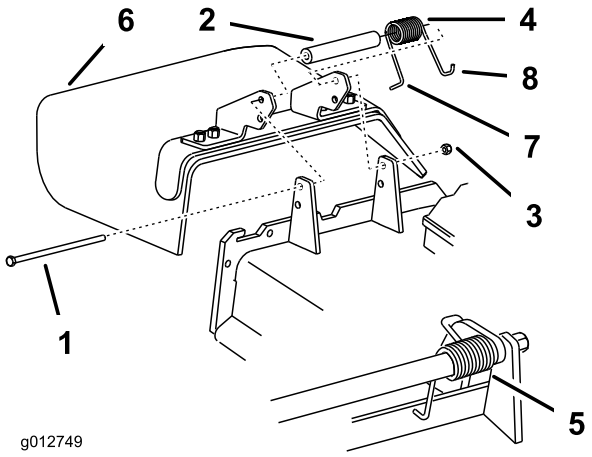

Figure 87

1. Bolt
2. Spacer
3. Locknut
4. Spring
5. Spring installed
6. Grass Deflector
7. **L** end of spring, place behind deck edge before installing bolt
8. **J** hook end of spring

2. Place spacer and spring onto grass deflector. Place the **L** end of spring behind deck edge.

   Note: Make sure the **L** end of spring is installed behind deck edge before installing the bolt as shown in Figure 87.

3. Install bolt and nut. Place the **J** hook end of spring around grass deflector (Figure 87).

   Important: The grass deflector must be able to rotate. Lift the deflector up to the full open position and ensure that it rotates into the full down position.

Cleaning

Cleaning Under the Mower

Service Interval: Before each use or daily

Remove the grass buildup under the mower daily.

1. Disengage the PTO, move the motion control levers to the neutral locked position and set the parking brake.
2. Stop the engine, remove the key, and wait for all moving parts to stop before leaving the operating position.
3. Raise the front of the machine and use jack stands to support the mower.

Waste Disposal

Engine oil, batteries, hydraulic oil, and engine coolant are pollutants to the environment. Dispose of these according to your state and local regulations.

Storage

Cleaning and Storage

1. Disengage the power take off (PTO), set the parking brake, and turn the ignition key to off. Remove the key.
2. Remove grass clippings, dirt, and grime from the external parts of the entire machine, especially the engine. Clean dirt and chaff from the outside of the engine's cylinder head fins and blower housing.

   Important: You can wash the machine with mild detergent and water. Do not pressure wash the machine. Avoid excessive use of water, especially near the drive system and engine. Pressure washing can force dirt and water into critical parts, such as spindle bearings and electrical switches.
3. Check the brake; refer to Servicing the Brake in Brake Maintenance (page 43).
4. Service the air cleaner; refer to Servicing the Air Cleaner in Engine Maintenance (page 32).
5. Grease the machine; refer to Greasing and Lubrication in Lubrication (page 30).
6. Change the engine oil; refer to Servicing the Engine in Engine Maintenance (page 32).
7. Check the tire pressure; refer to Checking the Tire Pressure in Drive System Maintenance (page 40).
8. For long-term storage:
   A. Add stabilizer/conditioner additive to fuel in the tank.
   B. Run engine to distribute conditioned fuel through the fuel system (5 minutes).
   C. Stop engine, allow to cool and drain the fuel tank; refer to Servicing the Fuel Tank in Fuel System Maintenance (page 37), or operate engine until it stops.
   D. Restart engine and run until it stops. Repeat, on Choke until engine will not restart.
   E. Dispose of fuel properly. Recycle as per local codes.

   Note: Do not store stabilizer/conditioned gasoline over 90 days.
9. Remove the spark plug(s) and check its condition; refer to Servicing the Spark Plug in Engine Maintenance (page 32). With the spark plug(s) removed from the engine, pour two tablespoons of engine oil into the spark plug hole. Now use the starter to crank the engine and distribute the oil inside the cylinder. Install the spark plug(s). Do not install the wire on the spark plug(s).
10. Check and tighten all bolts, nuts, and screws. Repair or replace any part that is damaged or defective.
11. Paint all scratched or bare metal surfaces. Paint is available from your Authorized Service Dealer.
12. Store the machine in a clean, dry garage or storage area. Remove the key from the ignition switch and keep it in a memorable place. Cover the machine to protect it and keep it clean.

Troubleshooting

Problem	Possible Cause	Corrective Action
Engine will not start, starts hard, or fails to keep running.	1. Fuel tank is empty or shut-off valve closed. 2. Choke is not on. 3. Spark plug wire is loose or disconnected. 4. Spark plug is pitted, fouled, or the gap is incorrect. 5. Air cleaner is dirty. 6. Dirt in the fuel filter. 7. Dirt, water, or stale fuel is in the fuel system. 8. The gap between the safety interlock switches is not correct.	1. Fill fuel tank with gasoline and open valve 2. Move the choke lever to choke position. 3. Install wire on spark plug. 4. Install a new, correctly gapped spark plug. 5. Service the air cleaner element. 6. Replace the fuel filter. 7. Contact an Authorized Service Dealer. 8. Contact an Authorized Service Dealer.
Engine loses power.	1. Engine load is excessive. 2. Air cleaner is dirty. 3. Oil level in the crankcase is low. 4. Cooling fins and air passages under the engine blower housing are plugged. 5. Spark plug is pitted, fouled, or the gap is incorrect. 6. Vent hole in the fuel cap is plugged. 7. Dirt in the fuel filter. 8. Dirt, water, or stale fuel is in the fuel system.	1. Reduce the ground speed. 2. Service the air cleaner. 3. Add oil to the crankcase. 4. Remove the obstruction from the cooling fins and air passages. 5. Install a new, correctly gapped spark plug. 6. Clean or replace the fuel cap. 7. Replace the fuel filter. 8. Contact an Authorized Service Dealer.
Engine overheats.	1. Engine load is excessive. 2. Oil level in the crankcase is low. 3. Cooling fins and air passages under the engine blower housing are plugged.	1. Reduce the ground speed. 2. Add oil to the crankcase. 3. Remove the obstruction from the cooling fins and air passages.
Machine does not drive.	1. Hydraulic oil reservoir low. 2. Air in the hydraulic system. 3. Pump drive belt slipping. 4. Pump drive belt idler spring missing. 5. Pump by-pass valves are open.	1. Add hydraulic oil to the reservoir. 2. Bleed the air out the hydraulic system. 3. Replace the pump drive belt. 4. Replace the pump drive belt idler spring. 5. Tighten the by-pass valves.
Abnormal vibration.	1. Cutting blade(s) is/are bent or unbalanced. 2. Blade mounting bolt is loose. 3. Engine mounting bolts are loose. 4. Loose engine pulley, idler pulley, or blade pulley. 5. Engine pulley is damaged. 6. Blade spindle is bent.	1. Install new cutting blade(s). 2. Tighten the blade mounting bolt. 3. Tighten the engine mounting bolts. 4. Tighten the appropriate pulley. 5. Contact an Authorized Service Dealer. 6. Contact an Authorized Service Dealer.
Uneven cutting height.	1. Blade(s) not sharp. 2. Cutting blade(s) is/are bent. 3. Mower deck is not level. 4. Mower deck pitch is wrong. 5. Underside of mower deck is dirty. 6. Tire pressure is not correct. 7. Blade spindle bent.	1. Sharpen the blade(s). 2. Install new cutting blade(s). 3. Level the mower deck side-to-side position. 4. Adjust the front-to-rear pitch. 5. Clean the underside of the mower deck. 6. Adjust the tire pressure. 7. Contact an Authorized Service Dealer.

Problem	Possible Cause	Corrective Action
Blades do not rotate.	1. Pump drive belt is worn, loose or broken.	1. Check the belt tension.
	2. Pump drive belt is off pulley.	2. Install drive belt and check adjusting shafts and belt guides for correct position.
	3. Mower deck belt is worn, loose or broken.	3. Install new deck belt.
	4. Mower deck belt is off pulley.	4. Install deck pulley and check the idler pulley, idler arm and spring for correct position and function.
	5. Broken or missing idler spring.	5. Replace the spring.
	6. Electric clutch out of adjustment.	6. Adjust the clutch air gap.
	7. Clutch connector or wire damaged.	7. Contact an Authorized Service Dealer.
	8. Damaged electric clutch.	8. Contact an Authorized Service Dealer.
	9. Safety interlock system prevents blade rotation.	9. Contact an Authorized Service Dealer.
	10. PTO switch is faulty.	10. Contact an Authorized Service Dealer.
The machine does not track correctly.	1. Motion control cables are out of adjustment.	1. Adjust the cables at the adjustment nut.
	2. Pump drive belt slipping on one pump pulley.	2. Install new pump drive belt.
	3. Hyraulic pump by-pass valve is partially open.	3. Close the by-pass valve.

Schematics

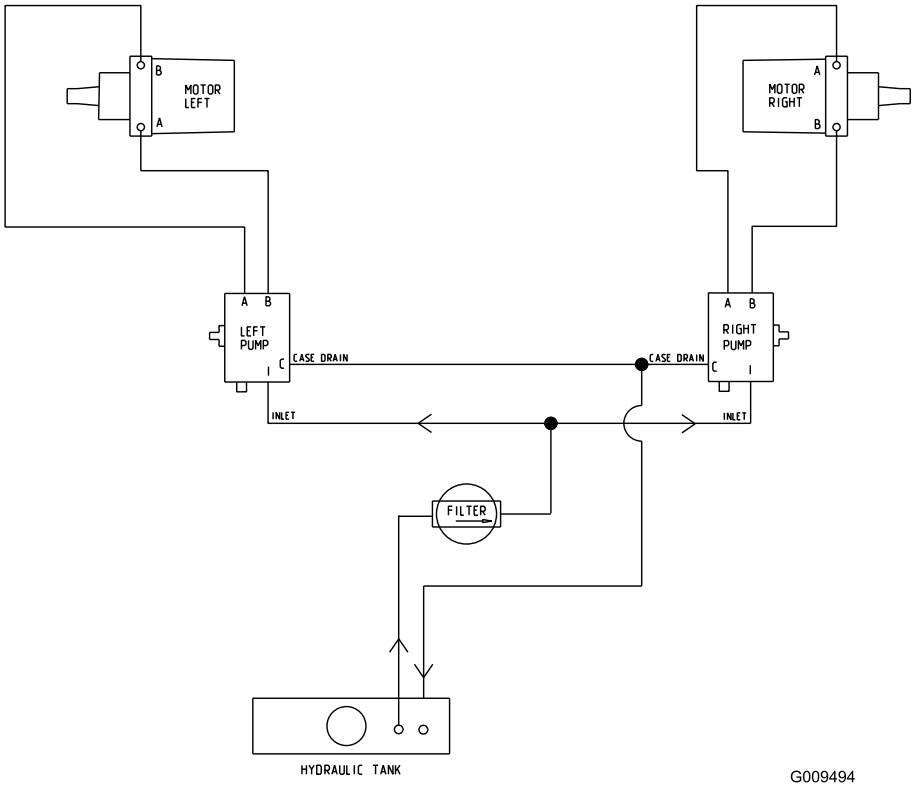

Hydraulic Schematic (Rev. A)

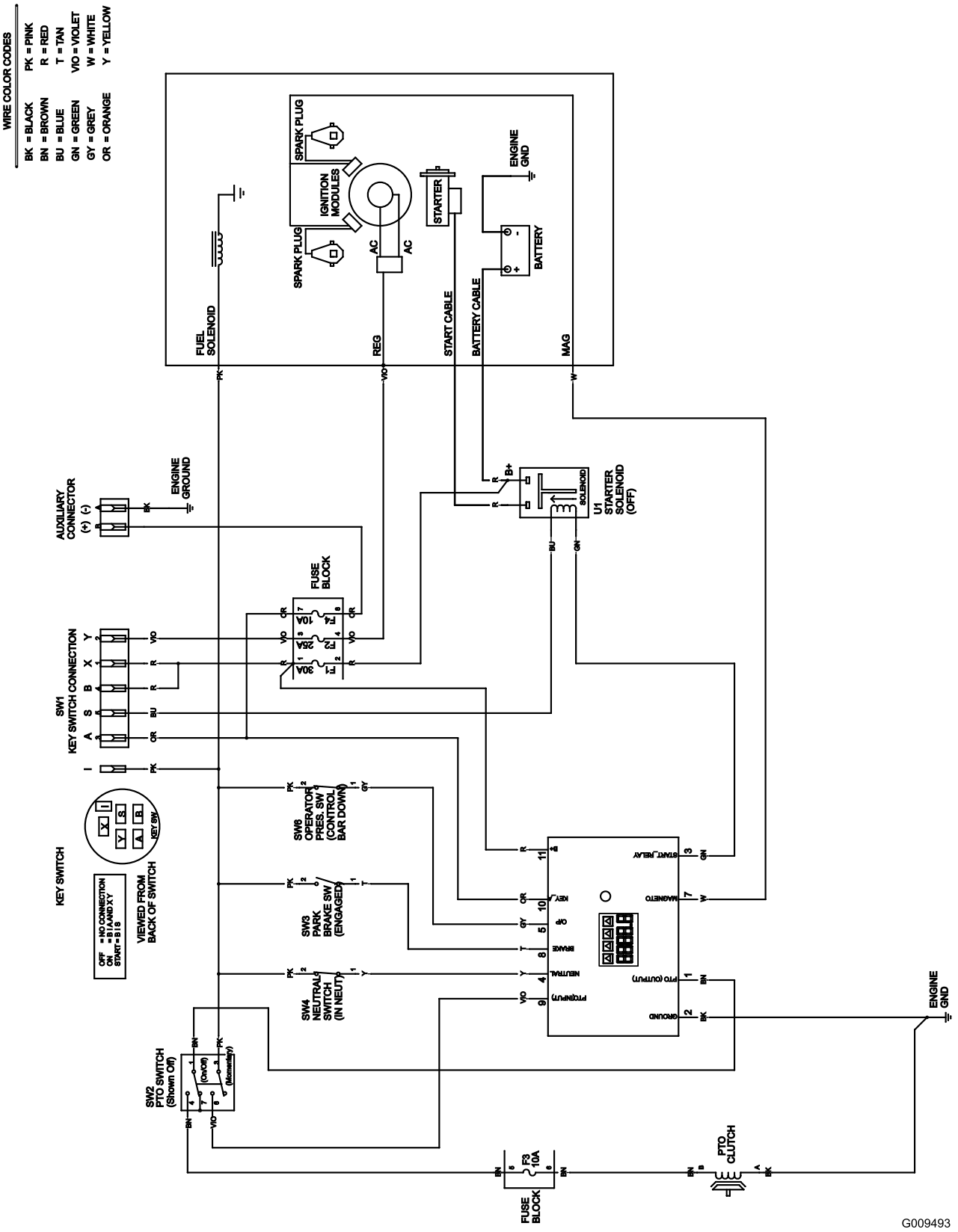

Electrical Schematic (Rev. A)

Notes:

The Toro Total Coverage Warranty

A Limited Warranty (see warranty periods below)

Landscape Contractor Equipment (LCE)

Conditions and Products Covered

The Toro Company and its affiliate, Toro Warranty Company, pursuant to an agreement between them, jointly promise to the original purchaser to repair the Toro Products listed below if defective in materials or workmanship.

The following time periods apply from the date of purchase by the original owner:

Products	Warranty Period
All Mowers	
• Engine**	2 years
• Battery	1 year
• Attachments	1 year
Mid-Size Walk-Behind Mowers	2 years
Grand Stand™ Mowers	5 years or 1,200 hours*
• Frame	Lifetime (original owner only)***
Z Master® Z400, Z500 Mowers	4 years or 1,200 hours*
• Engine	2 years**
• Frame	Lifetime (original owner only)***
Z Master® G3 Mowers	5 years or 1,200 hours*
• Frame	Lifetime (original owner only)***

*Whichever occurs first.

**Some engines used on Toro LCE Products are warranted by the engine manufacturer. Kawasaki FX engines have a 3 year warranty term for residential use. Residential use means use of the product on the same lot as your home.

***Lifetime Frame Warranty - If the main frame, consisting of the parts welded together to form the tractor structure that other components such as the engine are secured to, cracks or breaks in normal use, it will be repaired or replaced, at Toro's option, under warranty at no cost for parts and labor. Frame failure due to misuse or abuse and failure or repair required due to rust or corrosion are not covered.

This warranty includes the cost of parts and labor, but you must pay transportation costs.

Instructions for Obtaining Warranty Service

If you think that your Toro Product contains a defect in materials or workmanship, follow this procedure:

1. Contact any Authorized Toro Service Dealer to arrange service at their dealership. To locate a dealer convenient to you, refer to the Yellow Pages of your telephone directory (look under "Lawn Mowers") or access our web site at www.Toro.com. You may also call the numbers listed in item #3 to use the 24-hour Toro Dealer locator system.
2. Bring the product and your proof of purchase (sales receipt) to the Service Dealer. The dealer will diagnose the problem and determine if it is covered under warranty.
3. If for any reason you are dissatisfied with the Service Dealer's analysis or with the assistance provided, contact us at:

   RLC Customer Care Department
   Toro Warranty Company
   8111 Lyndale Avenue South
   Bloomington, MN 55420-1196
   888-865-5676 (U.S. Customers)
   888-865-5691 (Canada customers)

Owner Responsibilities

You must maintain your Toro Product by following the maintenance procedures described in the *Operator's Manual*. Such routine maintenance, whether performed by a dealer or by you, is at your expense.

Items and Conditions Not Covered

There is no other express warranty except for special emission system and engine warranty coverage on some products. This express warranty does not cover the following:

- Cost of regular maintenance service or wear parts, such as filters, fuel, lubricants, tune-up parts, blade sharpening, brake and clutch adjustments.
- Any product or part which has been altered or misused and requires replacement or repair due to normal wear, accidents, or lack of proper maintenance.
- Repairs necessary due to improper fuel, contaminants in the fuel system, or failure to properly prepare the fuel system prior to any period of non-use over three months.
- Pickup and delivery charges.

General Conditions

All repairs covered by these warranties must be performed by an Authorized Toro Service Dealer using Toro approved replacement parts.

Neither The Toro Company nor Toro Warranty Company is liable for indirect, incidental or consequential damages in connection with the use of the Toro Products covered by this warranty, including any cost or expense of providing substitute equipment or service during reasonable periods of malfunction or non-use pending completion of repairs under this warranty.

All implied warranties of merchantability (that the product is fit for ordinary use) and fitness for use (that the product is fit for a particular purpose) are limited to the duration of the express warranty

Some states do not allow exclusions of incidental or consequential damages, or limitations on how long an implied warranty lasts, so the above exclusions and limitations may not apply to you.

This warranty gives you specific legal rights, and you may also have other rights which vary from state to state.

Countries Other than the United States or Canada

Customers who have purchased Toro products outside the United States or Canada should contact their Toro Distributor (Dealer) to obtain guarantee policies for your country, province, or state. If for any reason you are dissatisfied with your Distributor's service or have difficulty obtaining guarantee information, contact the Toro importer. If all other remedies fail, you may contact us at Toro Warranty Company.