Form No. 3365-821 Rev A

TORO®

Count on it.

Parts Catalog

MVP Filter and Spark Plug Kit

Heavy-Duty Workman® Utility Vehicle

Model No. 30017

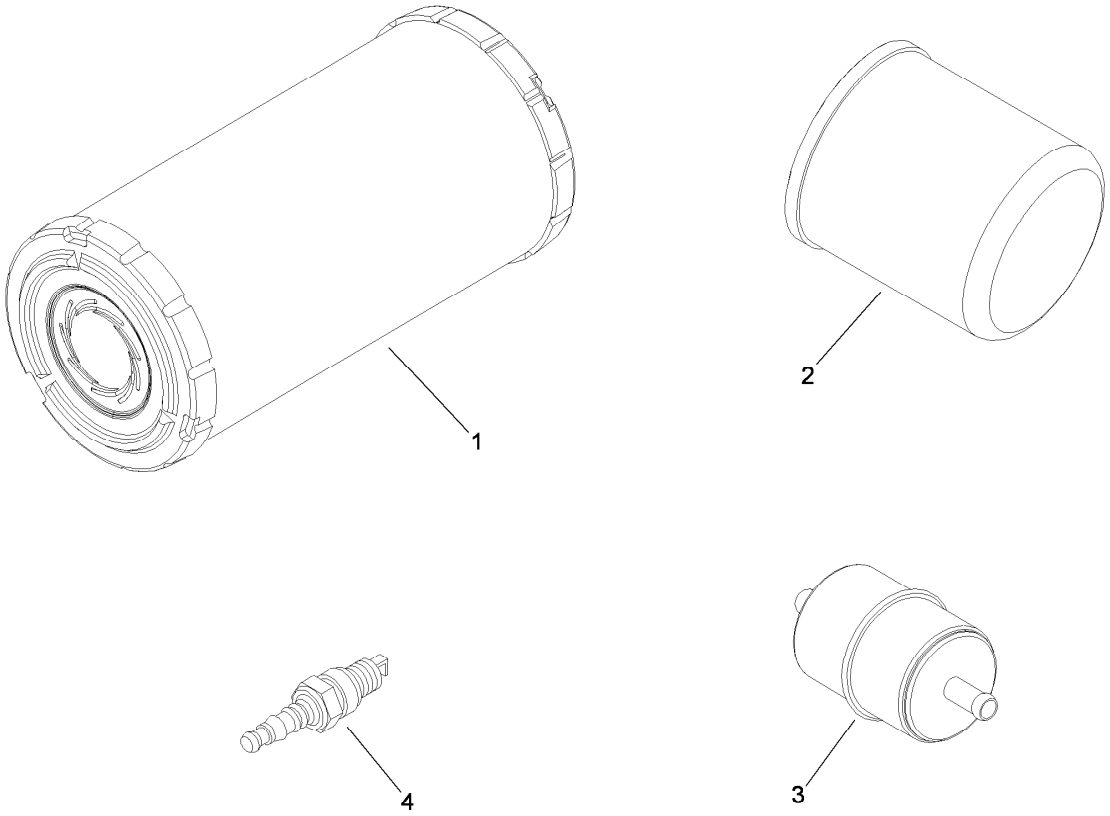

MVP Filter and Spark Plug Kit

Ref.	*Part Number*	*Qty.*	*Description*
1	108-3811	2	Filter-Air
2	108-3842	5	Filter-Oil
3	105-8045	1	Filter-Fuel
4	108-6945	3	Plug-Spark
5	112-7712	1	Label-Mvp