Form No. 3360-664 Rev C

TORO®

Count on it.

Parts Catalog

Z Master® G3 Riding Mower

with 152cm TURBO FORCE® Side Discharge Mower

Model No. 74925TE—Serial No. 290000001 and Up

CE

Register at www.Toro.com.

Original Instructions (EN)

Ordering Replacement Parts

To order replacement parts, please supply the part number, the quantity, and the description of each part desired.

Understanding Reference Numbers

Each identified part in an illustration has a reference number. The reference number for a part also appears in the parts list, along with other information about the part.

This catalog uses two special reference number formats, one to indicate parts in a service assembly and another to indicate the quantity of a given part in an illustration.

Service Assembly Reference Numbers

Parts in service assemblies have reference numbers in the form a:b. The a represents the reference number of the entire service assembly and the b represents a sequential number unique to each part within the service assembly.

For example, a wheel assembly might be identified by reference number 6, the tire by 6:1, the valve by 6:2, and the wheel by 6:3. When you order the assembly identified by reference number 6, you receive all parts identified by reference numbers 6:1,6:2, and 6:3. However, you may also order any part individually. Reference numbers of this type appear in illustration and in parts lists.

Reference Numbers Indicating Quantity

In an illustration, if a reference number indicates more than one part, the reference number has the form nX y. The n represents the quantity of the part, the X is the multiplication symbol, and the y represents the reference number.

For example, in an illustration, the reference number 2X 37 means that two of the parts identified by reference number 37 are indicated.

List of Abbreviations

AR: as required

ASM: assembly

BBC: blade brake control

BHTF: button head thread forming

CARR: carriage

CCW: counter clockwise

CW: clockwise

DEG: degrees

ECM: electronic control module

EXT: external

FH: flat head

GA: gauge

HD: heavy-duty

HF: hex flange

HH: hex head

HHF: hex head flange

HHFTF: hex head flange thread forming

HJ: hex jam

HLH: hex lag head

HOC: height-of-cut

HSBH: hex socket button head

HSFH: hex socket flat head

HSH: hex socket head

HWH: hex washer head

HWHTF: hex washer head thread forming

HYD: hydraulic

LH: left hand

LP: Liquid Propane

NI: nylon insert

NPTF: national pipe thread fine

PFH: phillips flat head

PPH: phillips pan head

PPHTF: phillips pan head thread forming

PRH: phillips round head

PTH: phillips truss head

PTO: power-take-off

RH: right hand

ROPS: roll-over protection system

RRB: rear roller brush

SFH: slotted fillister head

SHH: slotted hex head

SHWH: slotted hex washer head

SPH: slotted pan head

SQH: square head

SRH: slotted round head

STD: standard

TAP: self tapping

TTH: torx truss head

© 2010—The Toro® Company
8111 Lyndale Avenue South
Bloomington, MN 55420

Contact us at www.Toro.com.
Printed in the USA.
All Rights Reserved

Contents

Front Frame and Caster Wheel Assembly 4
Roll-Over Protection System Assembly No. 116-0232 5
Caster Wheel and Fork Assembly 6
Z Stand Assembly 7
Hydraulic Pump, Idler and Belt Assembly 8
Pump Ilder Assembly No. 116-1185 9
LH Hydro Assembly No. 116-1326 10
RH Hydro Assembly No. 116-1327 11
Rear Wheel and Park Brake Assembly 12
Brake Handle Assembly No. 117-0383 13
Fuel System Assembly 14
Fuel Tank Assembly No. 109-9357 15
Seat Mount Assembly 16
Seat Assembly No. 116-0035 17
Motion Control Assembly 18
Fender, Console and Control Assembly 19
LH Console Assembly No. 115-7401 20
RH Console Assembly No. 115-7400 21
Electrical System Assembly 22
Deck Lift Assembly 23
Height-of-Cut Assembly No. 117-3842 24
Engine, Muffler and Clutch Assembly 25
Deck Assembly 26
Deck Decal Assembly No. 117-3800 27
Idler Assembly 28
Spindle Assembly No. 108-7713 29
Rubber Deflector Assembly No. 108-2792 30
Lever Assembly No. 107-1664 31
Cylinder and Crankcase Assembly Kawasaki FX801V-AS04 32
Piston and Crankshaft Assembly Kawasaki FX801V-AS04 33
Valve and Camshaft Assembly Kawasaki FX801V-AS04 34
Lubrication Equipment Assembly Kawasaki FX801V-AS04 35
Cooling Equipment Assembly Kawasaki FX801V-AS04 36
Electric Equipment Assembly Kawasaki FX801V-AS04 37
Control Equipment Assembly Kawasaki FX801V-AS04 38
Carburetor Assembly Kawasaki FX801V-AS04 39
Air Filter and Muffler Assembly Kawasaki FX801V-AS04 41
Fuel Tank and Fuel Valve Assembly Kawasaki FX801V-AS04 42
Starter Assembly Kawasaki FX801V-AS04 43
Label Set Kawasaki FX801V-AS04 44
Attachments and Accessories 45

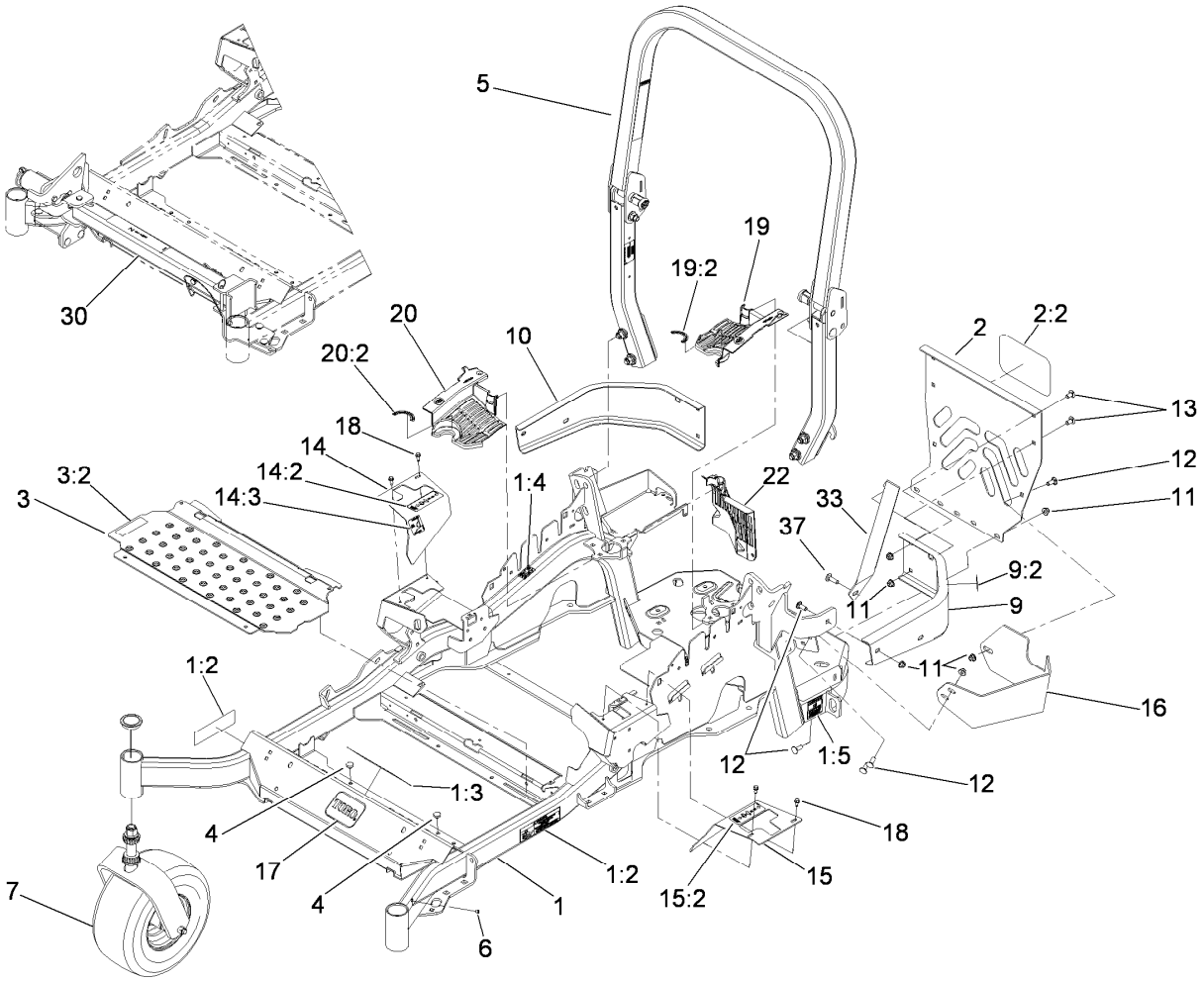

Front Frame and Caster Wheel Assembly

Ref.	Part Number	Qty.	Description
1	117-3834	1	Main Frame ASM
1:2	114-4469	2	Decal-Warning, Spring Load
1:3	117-3847	1	Decal-Danger Slope W/ROPS
1:4	106-5517	2	Decal-Surface, Hot
1:5	106-2655	2	Decal-Hazard, Pinched Finger
2	115-7410	1	Rear Guard ASM
2:2	67-7320	1	Decal
3	117-0915	1	Floorpan ASM
3:2	112-9028	1	Decal-Cover Missing
4	1-513658	2	Bumper
5	116-0232	1	ROPS ASM
6	1-811010	2	Plug
7		2	Caster Wheel ASM ●
9	117-3829	1	LH Rear Bumper ASM
9:2	106-5517	1	Decal-Surface, Hot
10	116-0057-03	1	Bumper-RH
11	104-8301	11	Nut-Flange, NI
12	3231-22	7	Screw-CARR

Ref.	Part Number	Qty.	Description
13	3231-21	3	Screw-CARR
14	117-3832	1	RH Motion Control Cover ASM
14:2	99-8936	1	Decal-Control, Motion
14:3	114-4467	1	Decal-Parking Brake
15	117-3831	1	LH Motion Control Cover ASM
15:2	99-8936	1	Decal-Control, Motion
16	117-0908-03	1	Guard-Muffler
17	68-3640	1	Decal
18	32144-10	4	Screw-HWH
19	117-3838	1	LH Hydro Guard ASM
19:2	117-3811	1	Decal-Hydro Oil
20	117-3839	1	RH Hydro Guard ASM
20:2	117-3811	1	Decal-Hydro Oil
22	109-9058	1	Guard-Hydro, Rear RH
30		1	G3 Z Stand ASM ●
33	117-0903-03	1	Strap
37	3231-25	1	Screw-CARR

● Not serviced separately

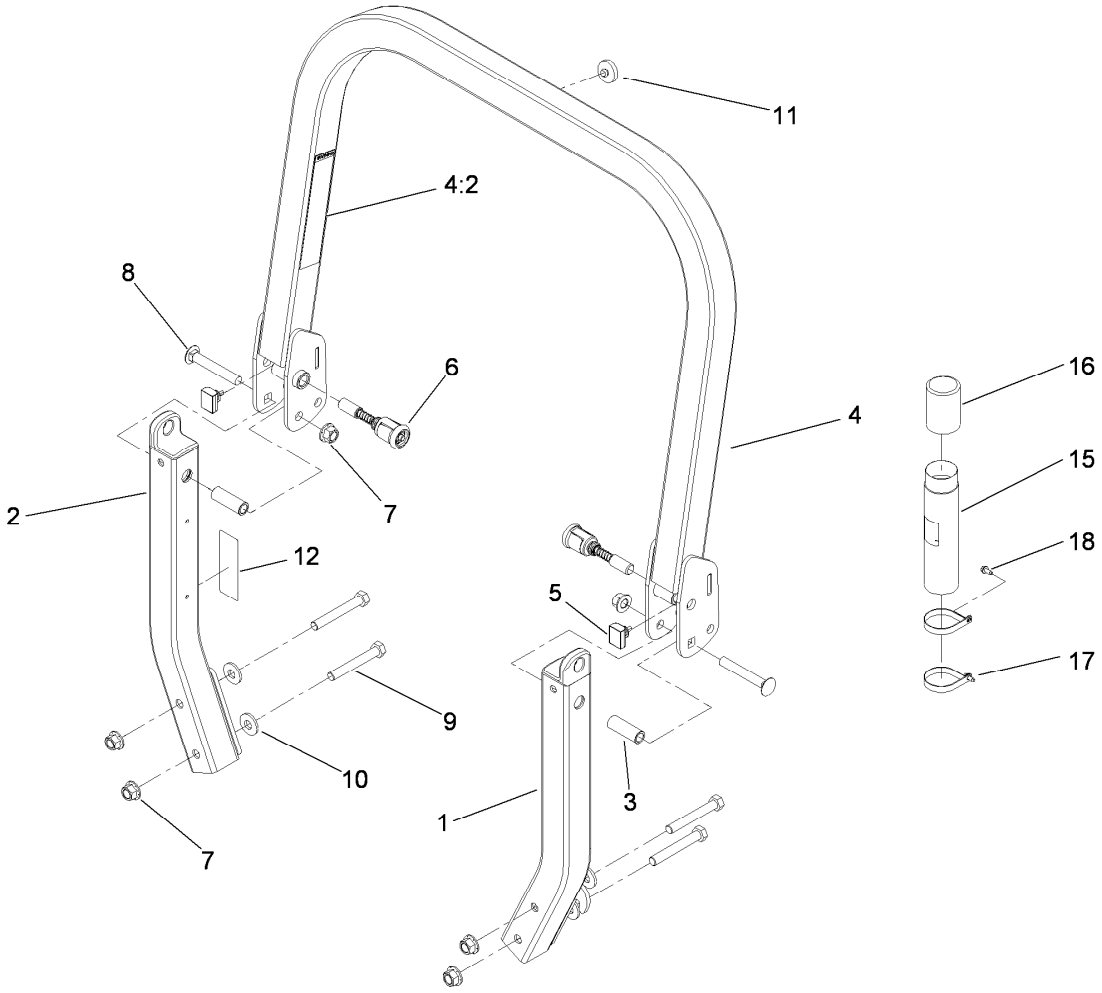

Roll-Over Protection System Assembly No. 116-0232

Ref.	Part Number	Qty.	Description
1		1	Leg-ROPS, LH ●
2		1	Leg-ROPS, RH ●
3	109-6653	2	Spacer
4		1	Upper ROPS ASM ●
4:2	107-3069	1	Decal-Warning, Folding ROPS
5	109-5337	2	Bumper-ROPS
6	116-0104	2	Spring Pin ASM
7	99-5107	6	Nut-Lock
8	3233-10	2	Screw-CARR
9	325-17	4	Screw-HH
10	1-513435	4	Washer-Spring
11	109-9233	1	Bumper-Push-In, Rubber
12	117-0346	1	Decal-Caution, Fuel Vent
15	104-7050	1	Tube-Manual
16	104-7048	1	Cap-Housing
17	107-1865	2	R-Clamp
18	32144-10	2	Screw-HWH

● Not serviced separately

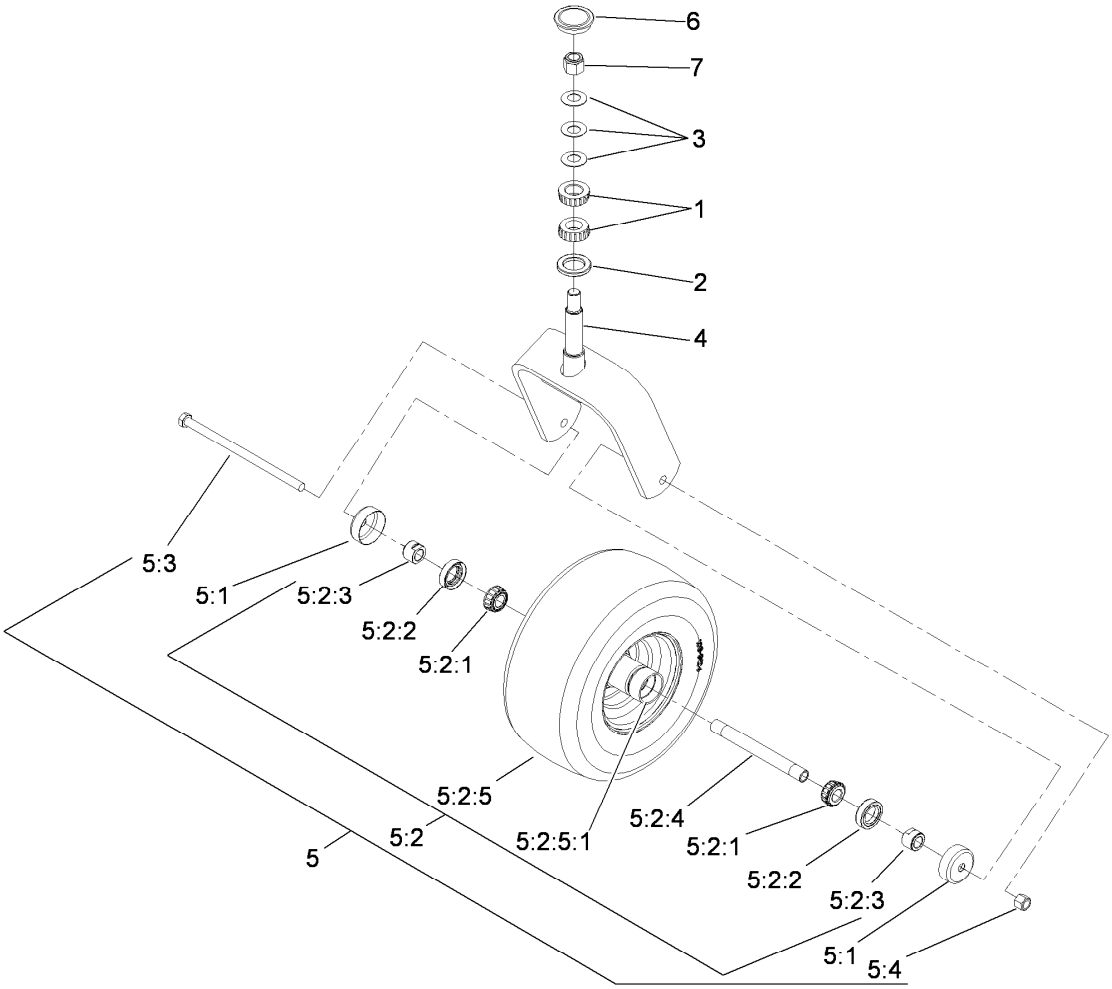

Caster Wheel and Fork Assembly

Ref.	Part Number	Qty.	Description
1	1-543509	2	Bearing-Roller, Tapered
2	1-543511	1	Seal-Grease
3	1-633508	3	Washer-Bellville
4	103-1474-01	1	Caster-Fork
5	109-9127	1	Wheel And Tire ASM
5:1	103-2768	2	Guard-Seal
5:2		1	Wheel And Tire ASM ●
5:2:1	1-633585	2	Bearing-Cone, Taper
5:2:2	103-0063	2	Seal-Caster
5:2:3	103-3051	2	Spacer-Nut
5:2:4	103-5156	1	Axle-Caster
5:2:5		1	Wheel And Tire ASM ●
5:2:5:1	1-633584	1	Bearing-Cup
5:3	325-39	1	Screw-HH
5:4	3296-23	1	Nut-Lock, NI
6	103-4882	1	Cap-Grease
7	3296-51	1	Nut-Lock, NI

● Not serviced separately

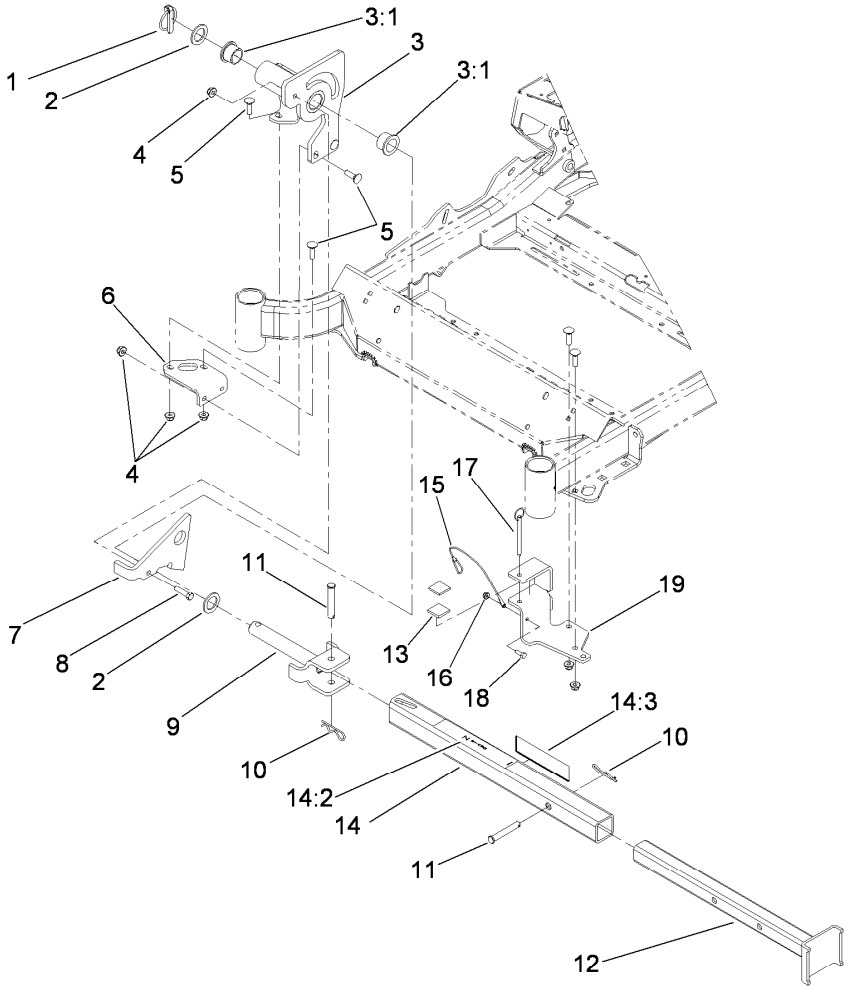

Z Stand Assembly

Ref.	Part Number	Qty.	Description
1	283-71	1	Pin-Lynch
2	3-6781	2	Washer-Thrust
3	115-3635	1	Z Stand Pivot ASM
3:1	94-1291	2	Bushing
4	104-8301	8	Nut-Flange, NI
5	3231-25	7	Screw-CARR
6	115-3619-01	1	Bracket-Pivot, Mount
7	100-9686-01	1	Bracket-Latch
8	323-8	1	Screw-HH
9	100-9692-01	1	Pivot Pin ASM
10	3290-355	2	Pin-Hair
11	283-55	2	Pin-Clevis
12	115-3631-01	1	Inner Tube ASM
13	115-3613	2	Cushion Rubber
14	115-3634	1	Outer Tube ASM
14:2	106-7464	1	Decal-Z Stand
14:3	107-3969	1	Decal-Warning
15	100-9385	1	Lanyard-Nylon
16	104-7201	1	Nut-HF
17	105-1647	1	Pin-Hitch, Cotterless
18	321-4	1	Screw-HH
19	115-3625-01	1	Z Stand Cradle ASM

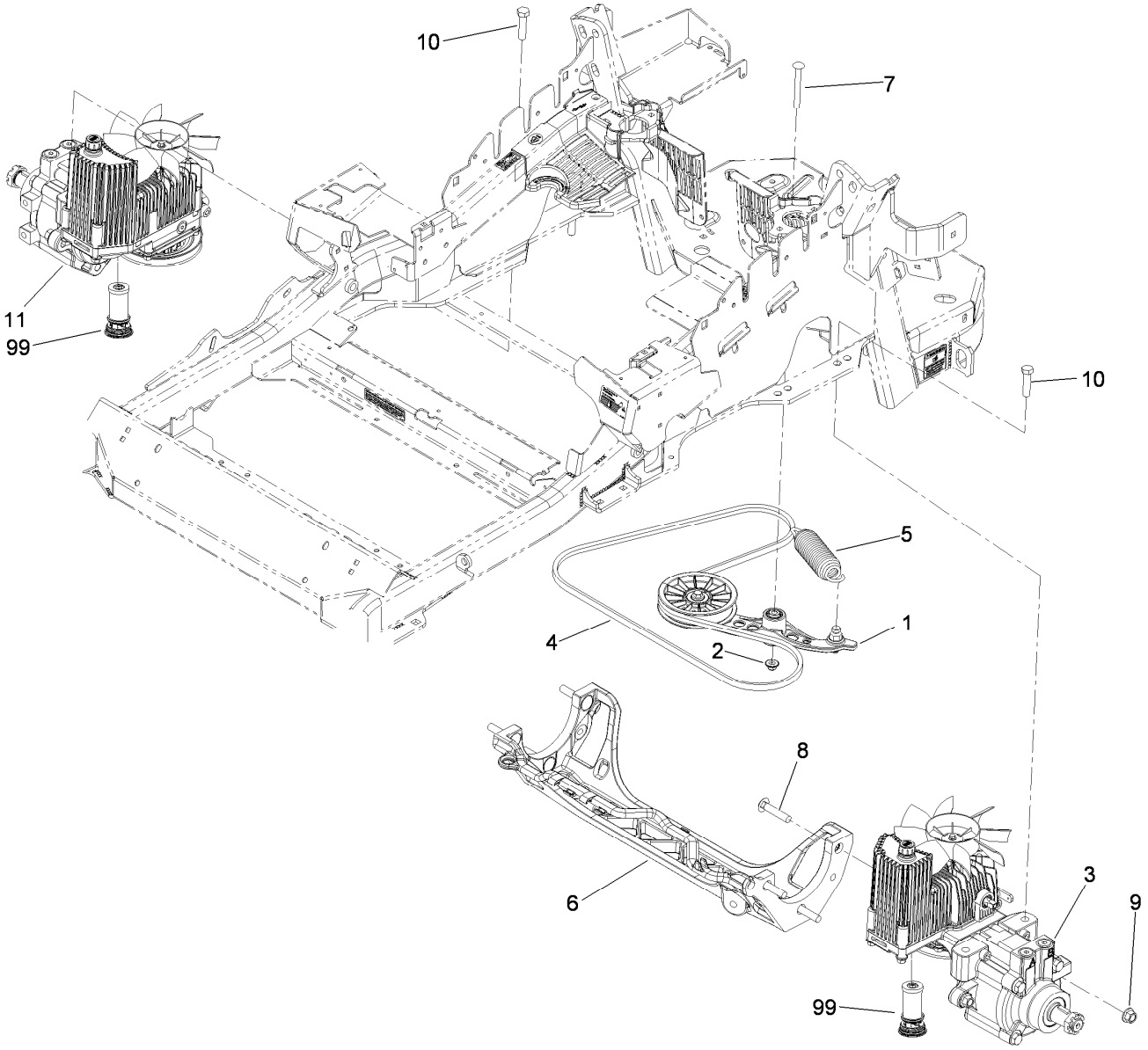

Hydraulic Pump, Idler and Belt Assembly

Ref.	*Part Number*	*Qty.*	*Description*
1	116-1185	1	Pump Idler ASM
2	109-6658	1	Nut-Flange, NI
3	116-1326	1	LH Hydro ASM (16Cc W/Shock)
4	109-3388	1	Belt
5	116-0133	1	Extension-Spring
6	109-9375	1	Cradle-Hydro
7	3231-41	1	Bolt-Carriage
8	3233-34	6	Screw-CARR
9	99-5107	6	Nut-Lock
10	325-8	4	Screw-HH
11	116-1327	1	RH Hydro ASM (16Cc W/Shock)
99	114-4713	1	Hypr-Oil 500 (Quart) ●
99	114-4714	1	Hypr-Oil 500 (Gallon) ●
99	114-4715	1	Hypr-Oil 500-5 (5 Gallon) ●
99	117-0390	1	Filter-Hydro

● Not illustrated

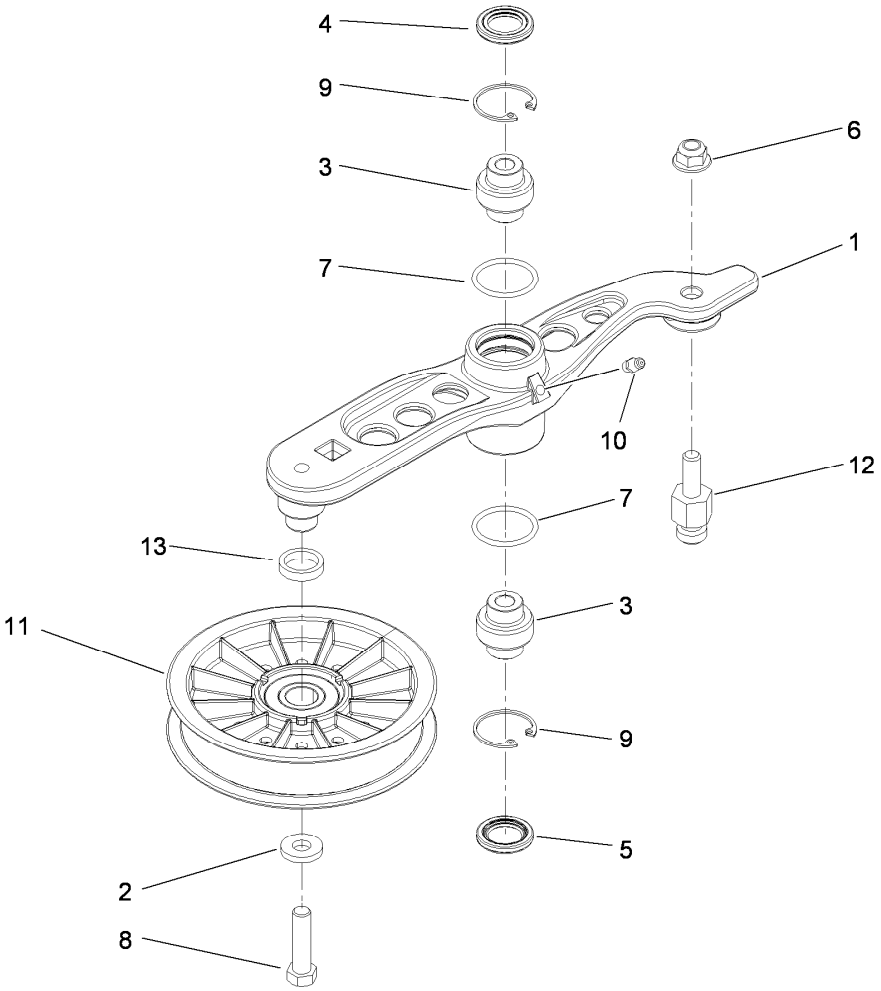

Pump Ilder Assembly No. 116-1185

Ref.	Part Number	Qty.	Description
1		1	Arm-Idler, Hydro ●
2	43-0940	1	Spacer-Hub, Blower
3	103-3504	2	Bearing-Spherical
4	103-3505	1	Seal-Double Lip
5	103-3506	1	Seal-Single Lip
6	104-8301	1	Nut-Flange, NI
7	106-7159	2	O-Ring
8	323-8	1	Screw-HH
9	32120-10	2	Ring-Snap
10	302-19	1	Fitting-Grease
11	109-8076	1	Pulley-Idler
12	109-7399	1	Pin-Anchor, Spring
13	116-1217	1	Spacer

● Not serviced separately

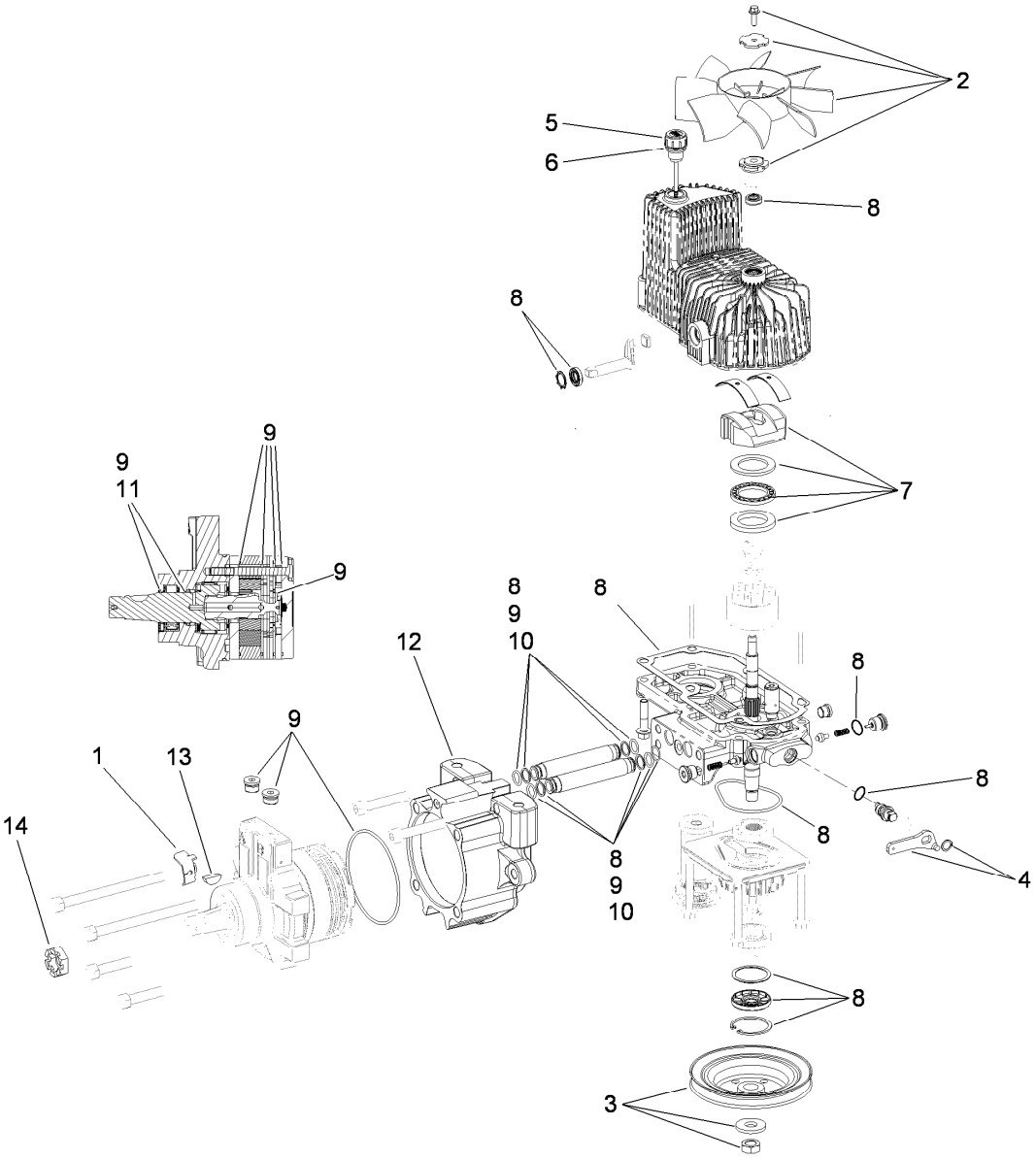

LH Hydro Assembly No. 116-1326

Ref.	Part Number	Qty.	Description
1	116-1758	1	Bracket-Anchor, Cable
2	116-0233	1	Fan Kit
3	116-0234	1	Pulley Kit
4	116-0235	1	Handle-Bypass Valve, Hydro
5	116-0236	1	Dipstick-Hydro W/Gasket
6	116-0237	1	Gasket-Dipstick, Hydro
7	116-1367	1	Swash Block Kit
8	116-1368	1	Pump Seal Kit
9	116-1369	1	Motor Seal Kit
10	116-1370	1	Tube Seal Kit
11	116-1371	1	Output Shaft Seal Kit
12	116-1372	1	Cup-Nose
13	3257-42	1	Key-Woodruff
14	1-809036	1	Nut-HH
99	116-1373	1	Flow Test Kit ●

● Not illustrated

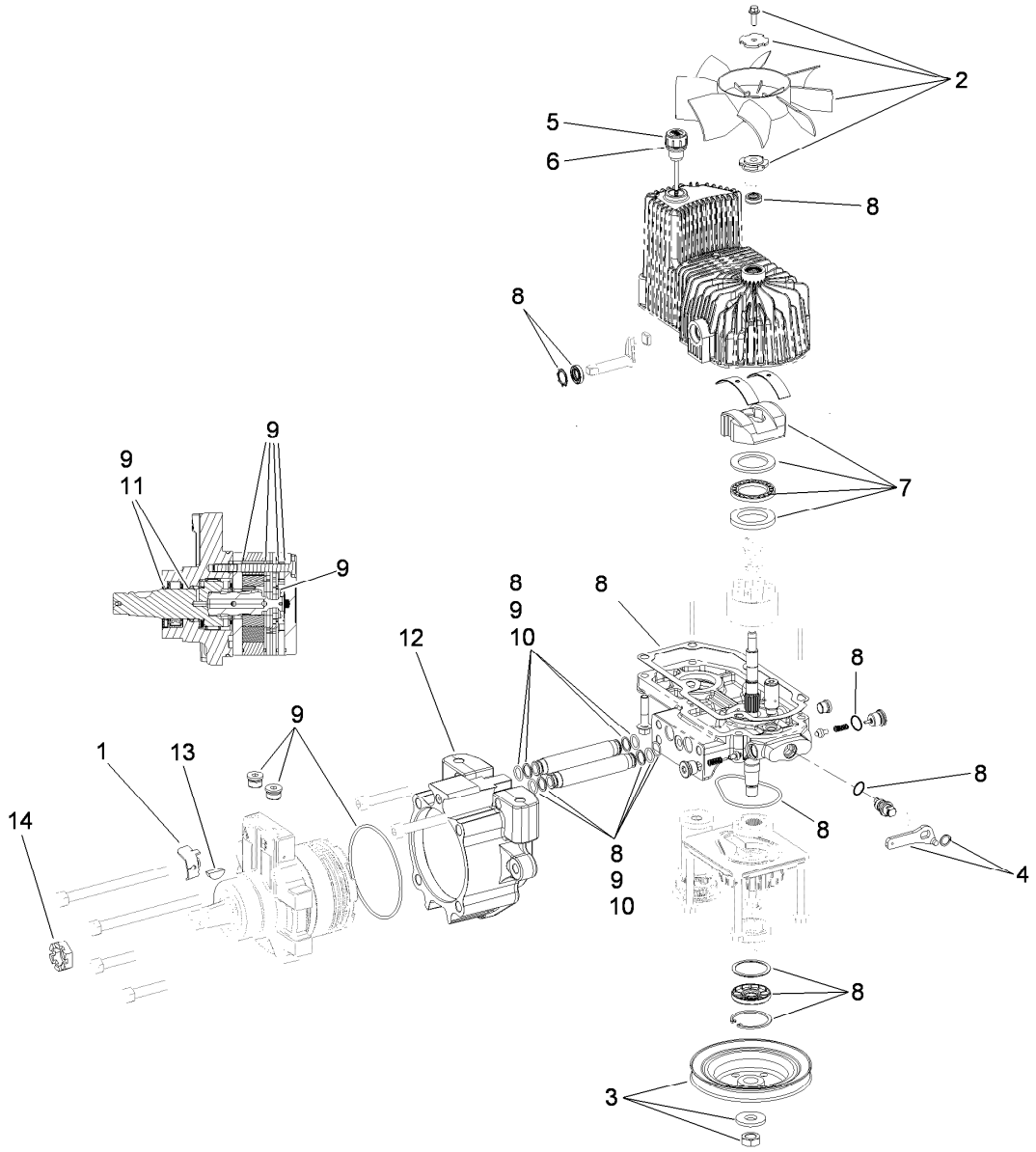

RH Hydro Assembly No. 116-1327

Ref.	Part Number	Qty.	Description
1	116-1758	1	Bracket-Anchor, Cable
2	116-0233	1	Fan Kit
3	116-0234	1	Pulley Kit
4	116-0235	1	Handle-Bypass Valve, Hydro
5	116-0236	1	Dipstick-Hydro W/Gasket
6	116-0237	1	Gasket-Dipstick, Hydro
7	116-1367	1	Swash Block Kit
8	116-1368	1	Pump Seal Kit
9	116-1369	1	Motor Seal Kit
10	116-1370	1	Tube Seal Kit
11	116-1371	1	Output Shaft Seal Kit
12	116-1372	1	Cup-Nose
13	3257-42	1	Key-Woodruff
14	1-809036	1	Nut-HH
99	116-1373	1	Flow Test Kit ●

● Not illustrated

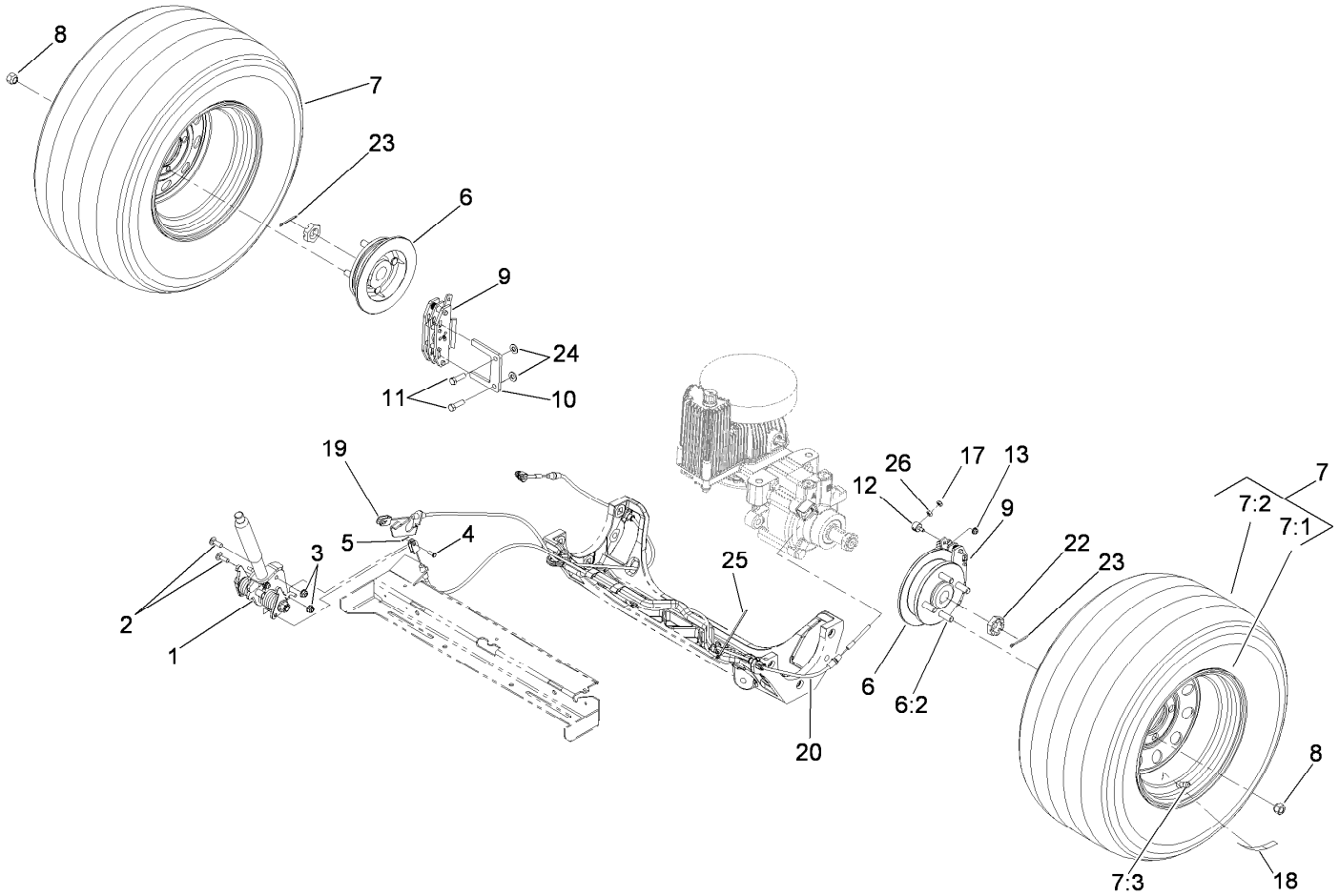

Rear Wheel and Park Brake Assembly

Ref.	Part Number	Qty.	Description
1	117-0383	1	Brake Handle ASM
2	3230-2	2	Bolt-CARR
3	104-8300	2	Nut-Flange, NI
4	60-1730	2	Pin-Clevis
5	3272-1	2	Pin-Cotter
6	115-3624	2	Wheel Hub And Stud ASM
6:2	1-633926	4	Stud-Wheel
7	109-3248	2	Wheel And Tire ASM
7:1	109-2871	1	Rim ASM
7:2	103-2744	1	Tire
7:3	232-27	1	Stem-Valve
8	242-50	8	Nut-Lug
9	109-2889	2	Caliper-Brake

Ref.	Part Number	Qty.	Description
10	109-0958	2	Plate-Mount, Brake
11	323-7	4	Screw-HH
12	112-8379	2	Swivel
13	104-7201	2	Nut-HF
17	3296-13	2	Nut-Lock NI
18	114-4499	2	Decal-Wheel Hub, Ce
19	115-3584	1	Cable
20	115-3585	1	Cable
22	1-809036	2	Nut-HH
23	1-806800	2	Pin-Cotter
24	3256-24	4	Washer-Flat
25	116-0940	1	Tie-Cable
26	3219-1	2	Nut-Hex

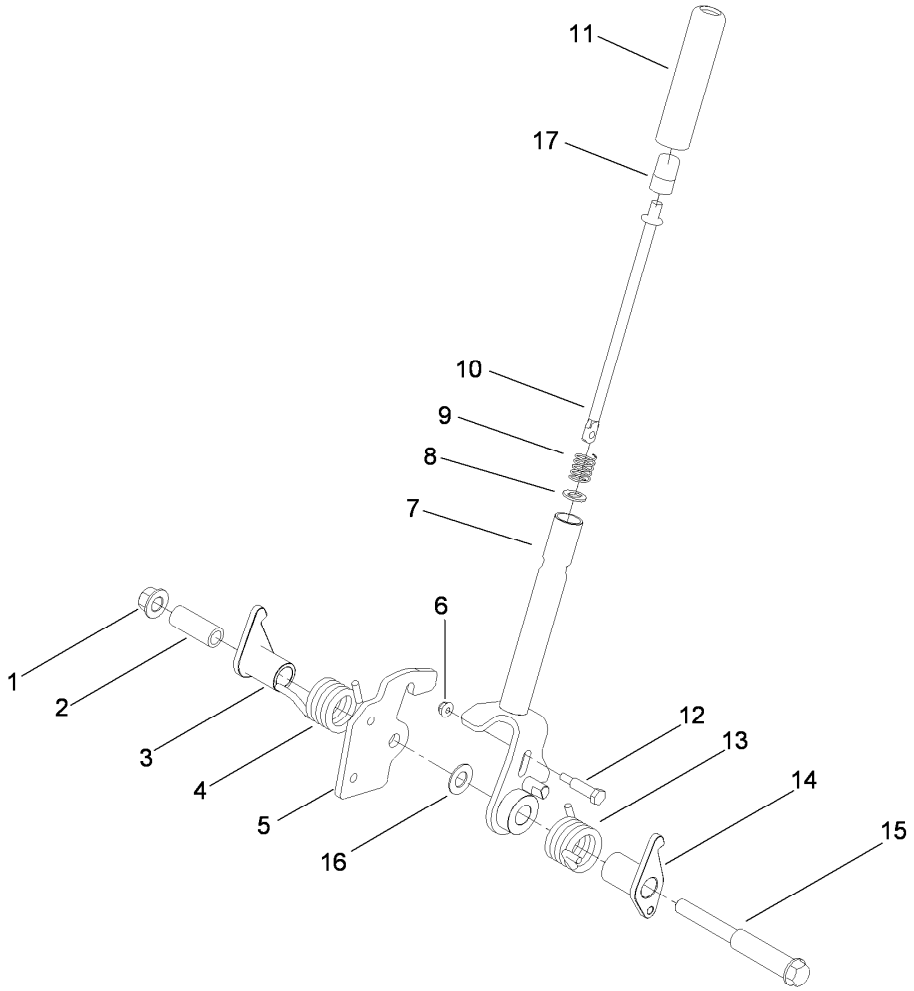

Brake Handle Assembly No. 117-0383

Ref.	*Part Number*	*Qty.*	*Description*
1	99-5107	1	Nut-Lock
2	117-0380	1	Spacer
3	115-3580	1	Arm-Brake, LH
4	117-0376	1	Spring-Torsion, RH
5	115-3574	1	Plate-Latch
6	104-7201	1	Nut-HF
7	117-0382-03	1	Brake Handle ASM
8	114-1207	1	Washer-Special
9	114-8187	1	Spring-Compression
10	115-3581	1	Rod-Release, Brake
11	115-3592	1	Grip
12	112-8387	1	Bolt-Shoulder
13	117-0375	1	Spring-Torsion, LH
14	115-3579	1	Arm-Brake, RH
15	117-0379	1	Bolt-Shoulder
16	117-0378	1	Washer
17	115-2750	1	Knob

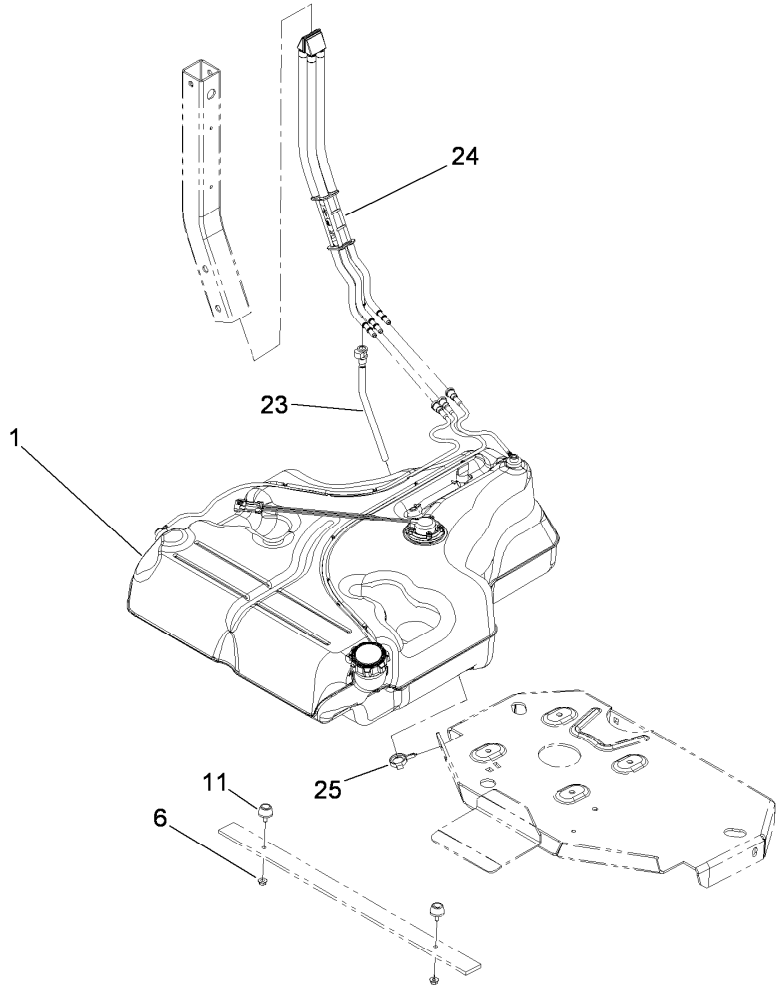

Fuel System Assembly

Ref.	*Part Number*	*Qty.*	*Description*
1	109-9656	1	Fuel Tank ASM (W/O Sender)
1	109-9357	1	Fuel Tank ASM
6	32128-33	2	Nut-HF
11	109-2365	2	Bumper-Rubber (W/Stud)
23	109-9450	1	Tube-Vent, Fuel Drain
24	109-9491	1	Fuel Manifold Vent ASM
25	105-1853	1	Clamp-Hose

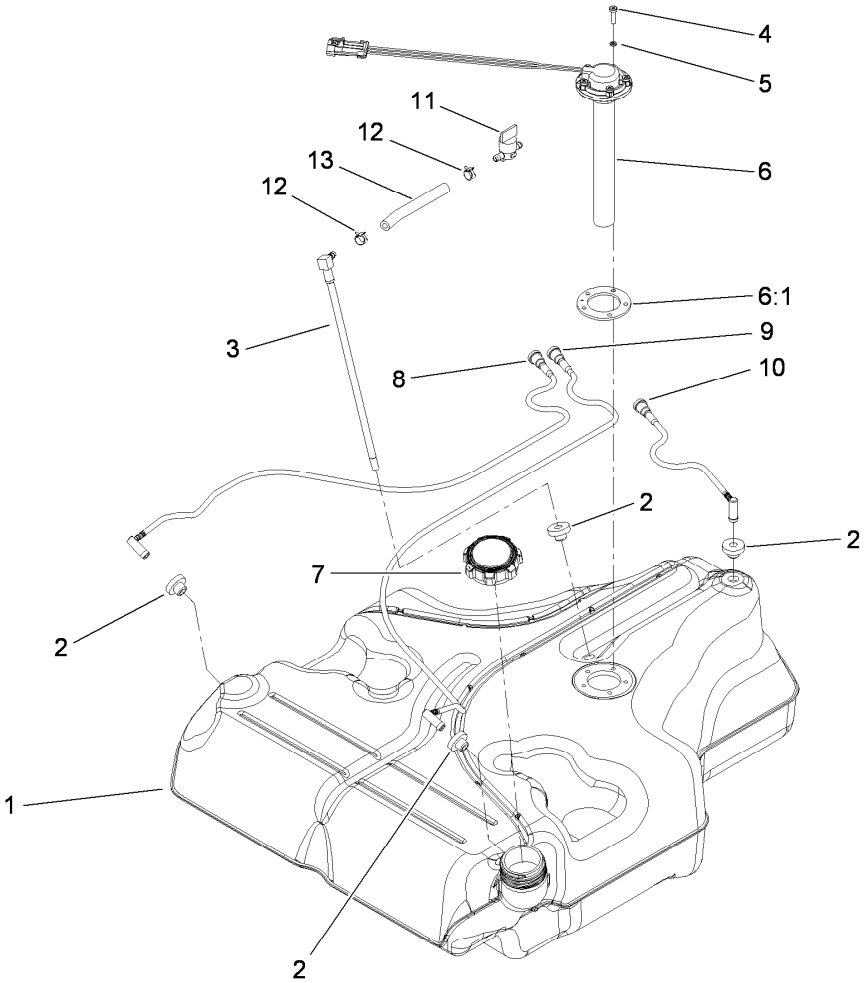

Fuel Tank Assembly No. 109-9357

Ref.	*Part Number*	*Qty.*	*Description*
1		1	Tank-Fuel, Belly ●
2	46-6560	4	Bushing
3	109-9364	1	Fitting-Fuel (W/Line And Screen)
4	9107944	5	Screw-Pan
5	3253-17	5	Washer-Lock
6	116-0003	1	Sender-Fuel Level
6:1	109-9620	1	Gasket-Sender, Fuel
7	109-9619	1	Cap-Fuel
8	109-9447	1	Tube-Vent, RH
9	109-9448	1	Tube-Vent, LH
10	109-9449	1	Tube-Vent, Rear
11	1-603770	1	Valve-Fuel
12	2412-98	2	Clamp
13	109-0650	1	Hose-Fuel

● Not serviced separately

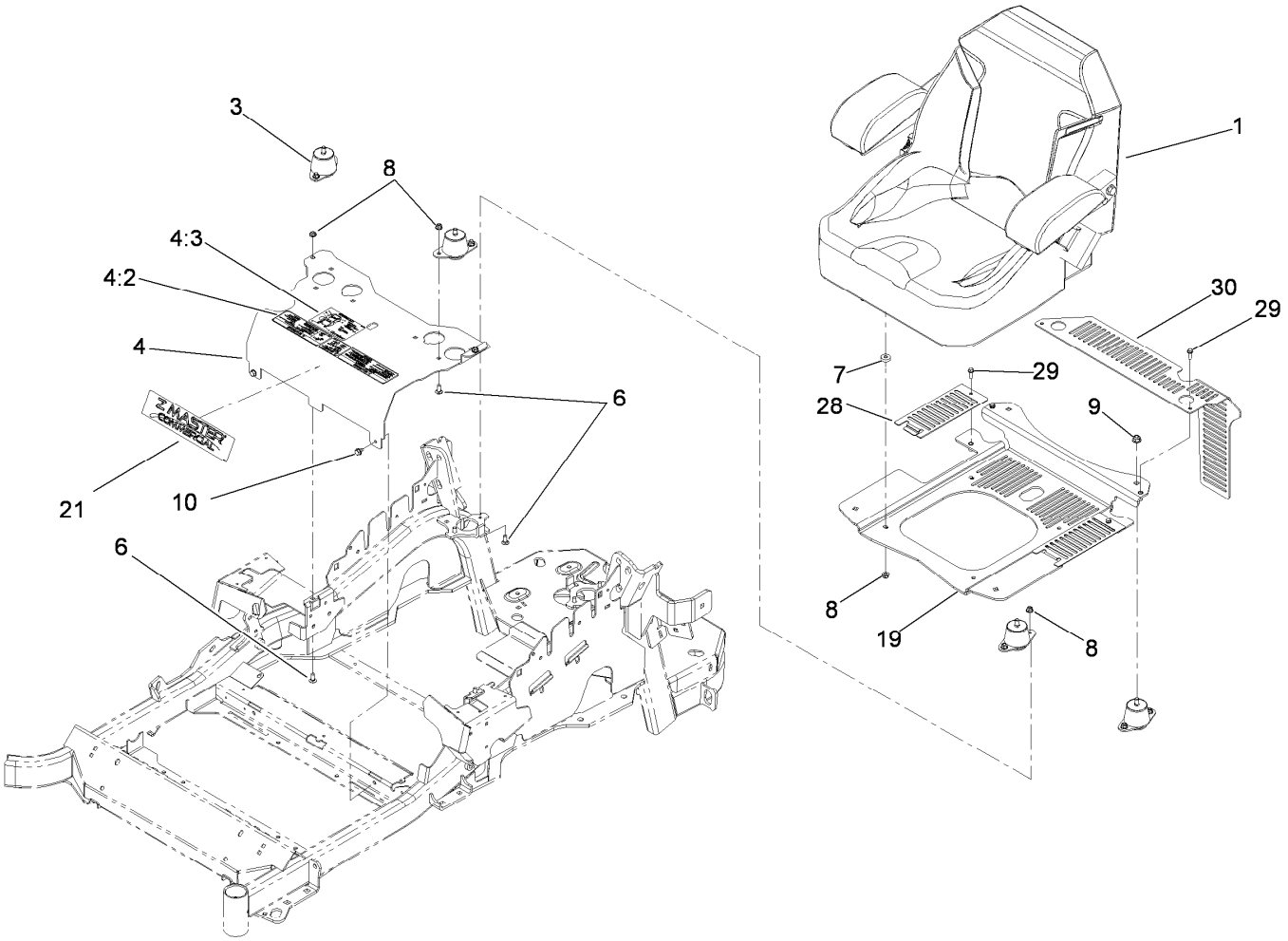

Seat Mount Assembly

Ref.	Part Number	Qty.	Description
1	116-0035	1	Seat-Standard
3	109-9034	4	Isolator-Seat
4	117-3836	1	Mount-Seat
4:2	114-4468	1	Decal-Console
4:3	114-4465	1	Decal-Service Aid
6	3230-23	10	Screw-CARR
7	26-4840	4	Spacer-Pin, Mounting
8	104-8300	14	Nut-Flange, NI
9	104-8301	4	Nut-Flange, NI
10	9266934	2	Screw
19	117-0910	1	Seat Base ASM
21	114-5878	1	Decal-Dash
28	117-0901-03	2	Cover
29	32105-15	4	Screw
30	114-1548-03	1	Guard

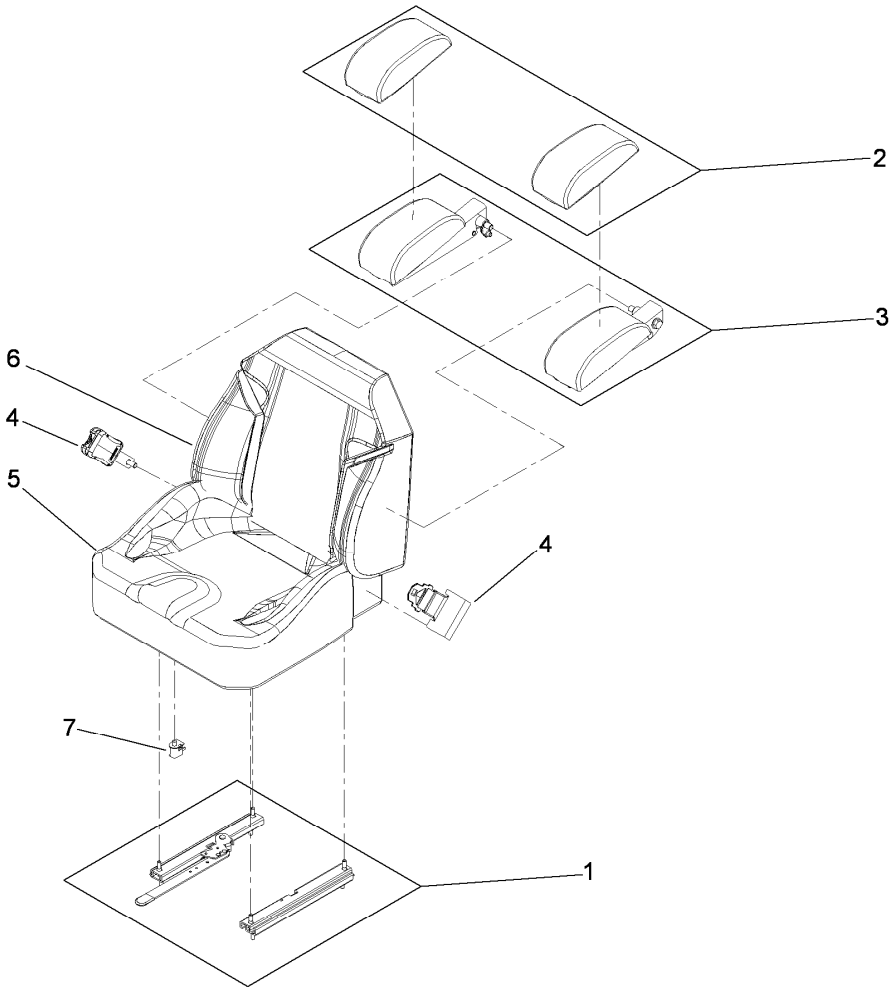

Seat Assembly No. 116-0035

Ref.	*Part Number*	*Qty.*	*Description*
1	109-9801	1	Seat Track Set
2	109-9802	1	Arm Rest Pad Set
3	109-9803	1	Arm Rest Set
4	109-9805	1	Seat Belt Kit
5	109-9806	1	Cover-Cushion
6	109-9808	1	Cover-Back
7	82-2190	1	Switch-Bail

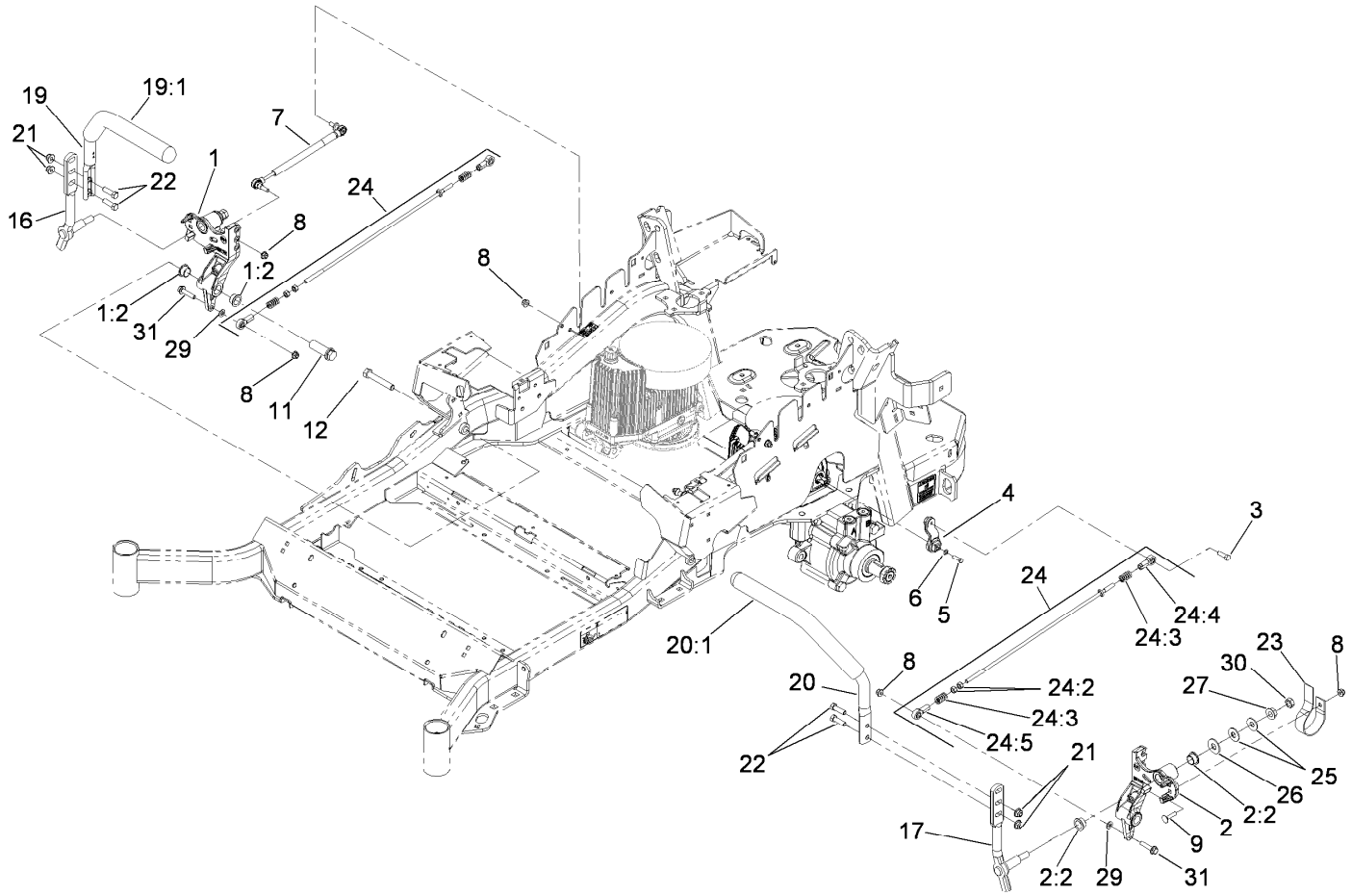

Motion Control Assembly

Ref.	Part Number	Qty.	Description
1	116-0880	1	RH Motion Control And Bushing ASM
1:2	109-8054	4	Bushing-Flange
2	116-0881	1	LH Motion Control And Bushing ASM
2:2	109-8054	4	Bushing-Flange
3	116-0648	2	Screw-Thread Locking
4	109-4581	2	Arm-Control, Pump
5	9080046	2	Screw-HH
6	1-303435	2	Washer-Spring
7	116-0027	2	Damper-Control, Motion
8	104-8300	8	Nut-Flange, NI
9	3230-2	2	Bolt-CARR
11	109-5891	2	Hub-Threaded
12	325-12	2	Screw-HH
16	116-0039	1	Lever-Control Motion, RH
17	116-0040	1	Lever-Control Motion, LH
19	109-6591	1	RH Steering Handle ASM

Ref.	Part Number	Qty.	Description
19:1	106-9987	1	Grip-Control, Motion
20	109-6592	1	LH Steering Handle ASM
20:1	106-9987	1	Grip-Control, Motion
21	104-8301	4	Nut-Flange, NI
22	323-7	4	Screw-HH
23	109-5575	2	Spring-Leaf
24	109-8106	2	Front Pump Linkage ASM
24:2	3219-2	2	Nut-Hex
24:3	1-323245	2	Spring-Compression
24:4	1-633152	1	Balljoint-LH
24:5	1-543017	1	Balljoint-RH
25	109-9505	4	Washer-Spring
26	3256-6	2	Washer-Flat
27	32128-23	2	Nut-HF
29	3256-23	2	Washer-Flat
30	3218-5	2	Nut-Jam
31	115-1794	2	Screw-HHF

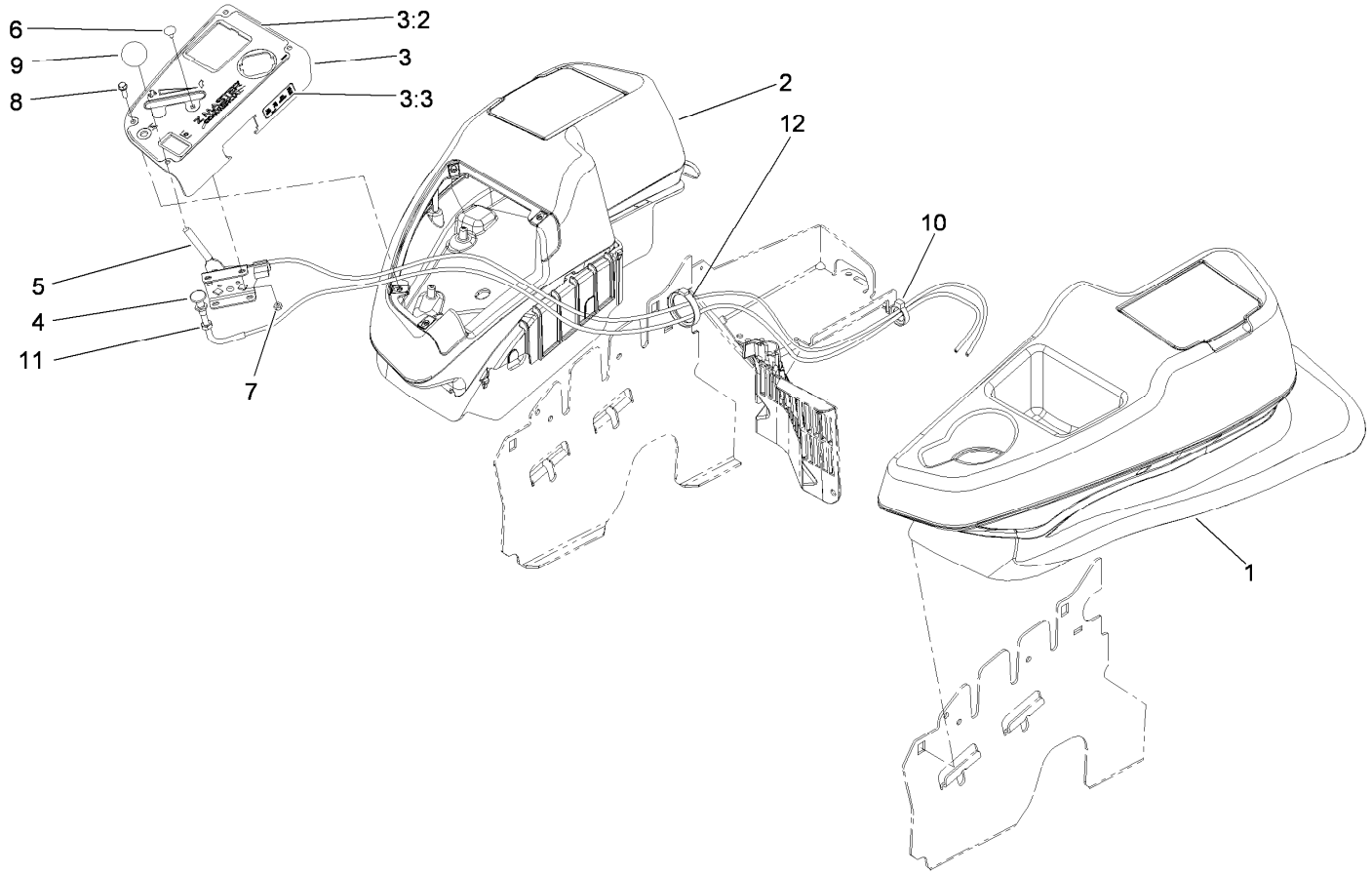

Fender, Console and Control Assembly

Ref.	*Part Number*	*Qty.*	*Description*
1	115-7401	1	LH Wide Fender/Console ASM
2	115-7400	1	RH Wide Fender/Console ASM
3	114-9836	1	Control Panel ASM
3:2	114-9834	1	Decal-Panel, Control
3:3	114-4466	1	Decal-Fuses
4	115-2753	1	Choke Control ASM
5	110-5727	1	Control-Throttle ASM
6	1-807513	2	Bolt-CARR
7	3296-2	2	Nut-Lock, NI
8	32105-15	4	Screw
9	1-603175	1	Knob-Ball
10	105-1853	1	Clamp-Hose
11	3220-3	1	Nut-HJ
12	117-7817	1	Clamp-Harness

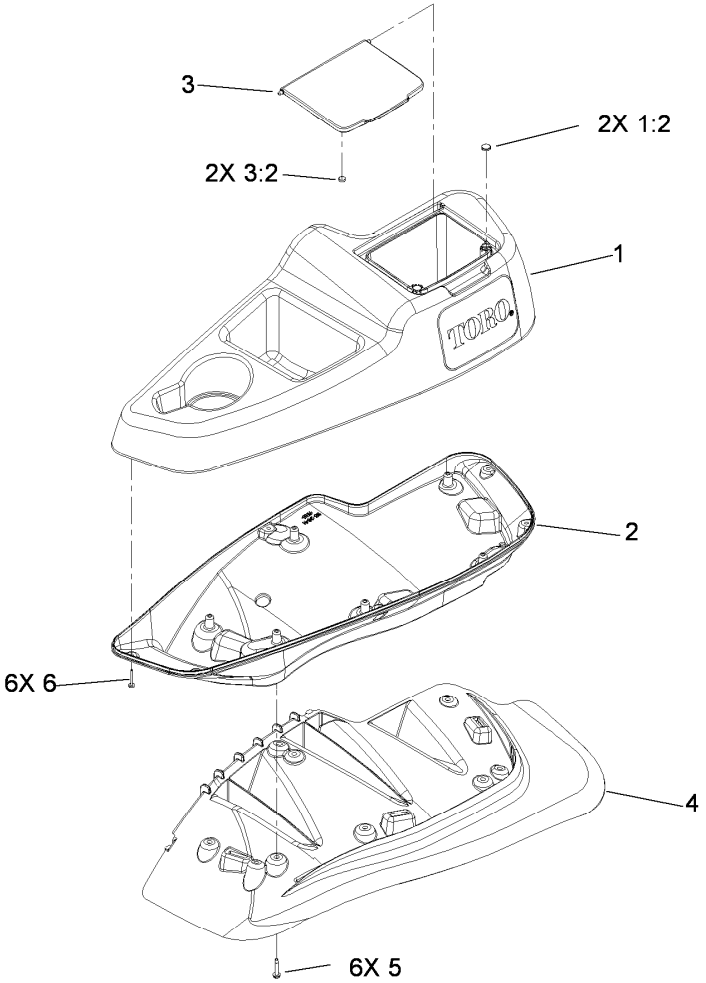

LH Console Assembly No. 115-7401

Ref.	*Part Number*	*Qty.*	*Description*
1	114-1539	1	LH Wide Console Top ASM
1:2	117-0883	2	Puck
2	115-3641	1	Console-Lwr, LH Wide
3	114-1537	1	Wide Lid ASM
3:2	114-5896	2	Magnet
4	109-9085	1	Fender-Wide, LH
5	32144-89	6	Screw-Thread Forming
6	117-0347	6	Screw-Fillister Head

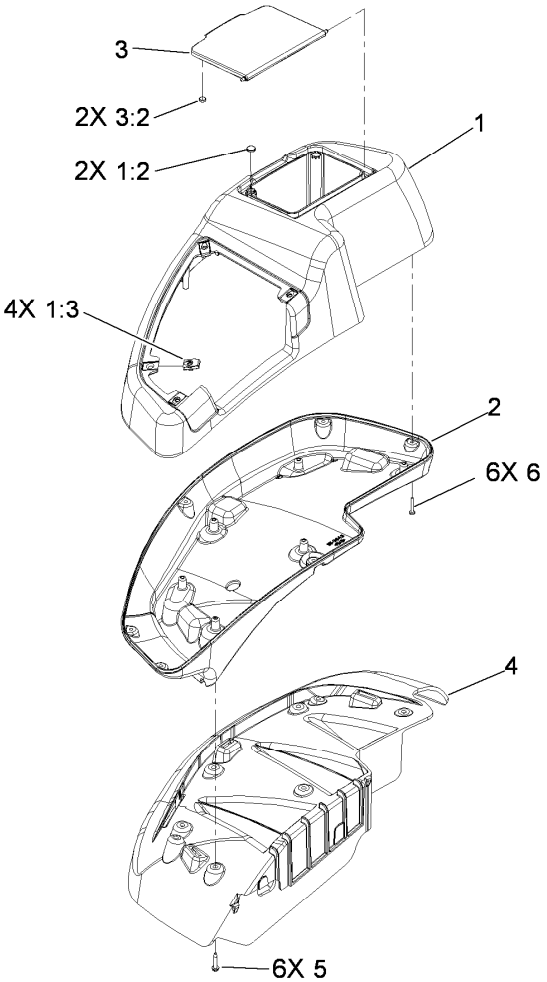

RH Console Assembly No. 115-7400

Ref.	*Part Number*	*Qty.*	*Description*
1	114-1538	1	RH Wide Top Console ASM
1:2	117-0883	2	Puck
1:3	107069	4	Clip
2	115-3643	1	Console-Lwr, RH Wide
3	114-1537	1	Wide Lid ASM
3:2	114-5896	2	Magnet
4	109-9083	1	Fender-Wide, RH
5	32144-89	6	Screw-Thread Forming
6	117-0347	6	Screw-Fillister Head

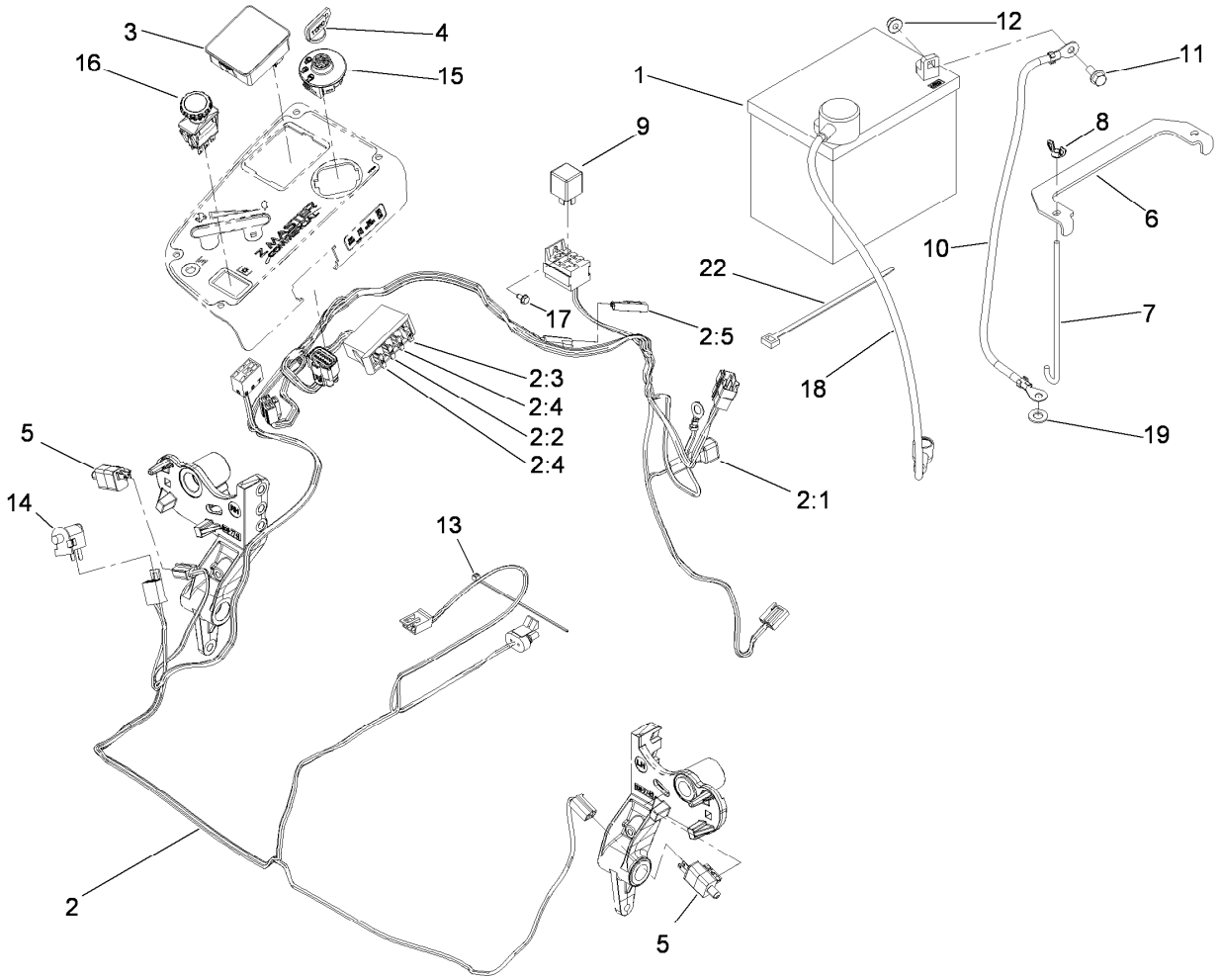

Electrical System Assembly

Ref.	Part Number	Qty.	Description
1	104-2491	1	Battery
2	115-2796	1	Harness-Wire, Main
2:1	103-3895	1	Diode-Tvs
2:2	218-578	1	Fuse-10 Amp
2:3	109355	1	Fuse-15 Amp
2:4	109102	2	Fuse-25 Amp
2:5	116-0053	1	Cap-Plug
3	116-0916	1	Module-Meter, Hour
4	63-8360	1	Key-Ignition
5	110-6765	2	Switch-Single Pole No
6	116-0042-03	1	Strap-Tie Down, Battery
7	1-633651	2	Bolt-Holddown
8	1-543792	2	Wingnut

Ref.	Part Number	Qty.	Description
9	1-643275	1	Relay
10	114-1218	1	Cable-Battery, Negative
11	3234-5	2	Screw-HHF
12	104-8300	2	Nut-Flange, NI
13	1-303287	3	Tie-Cable
14	82-2190	1	Switch-Bail
15	116-0229	1	Switch-Ignition
16	116-0124	1	Switch-PTO, 10A
17	104-2065	1	Screw-HWH
18	115-3864	1	Cable-Battery, Positive
19	3256-24	1	Washer-Flat
22	1-303335	1	Tie-Plastic

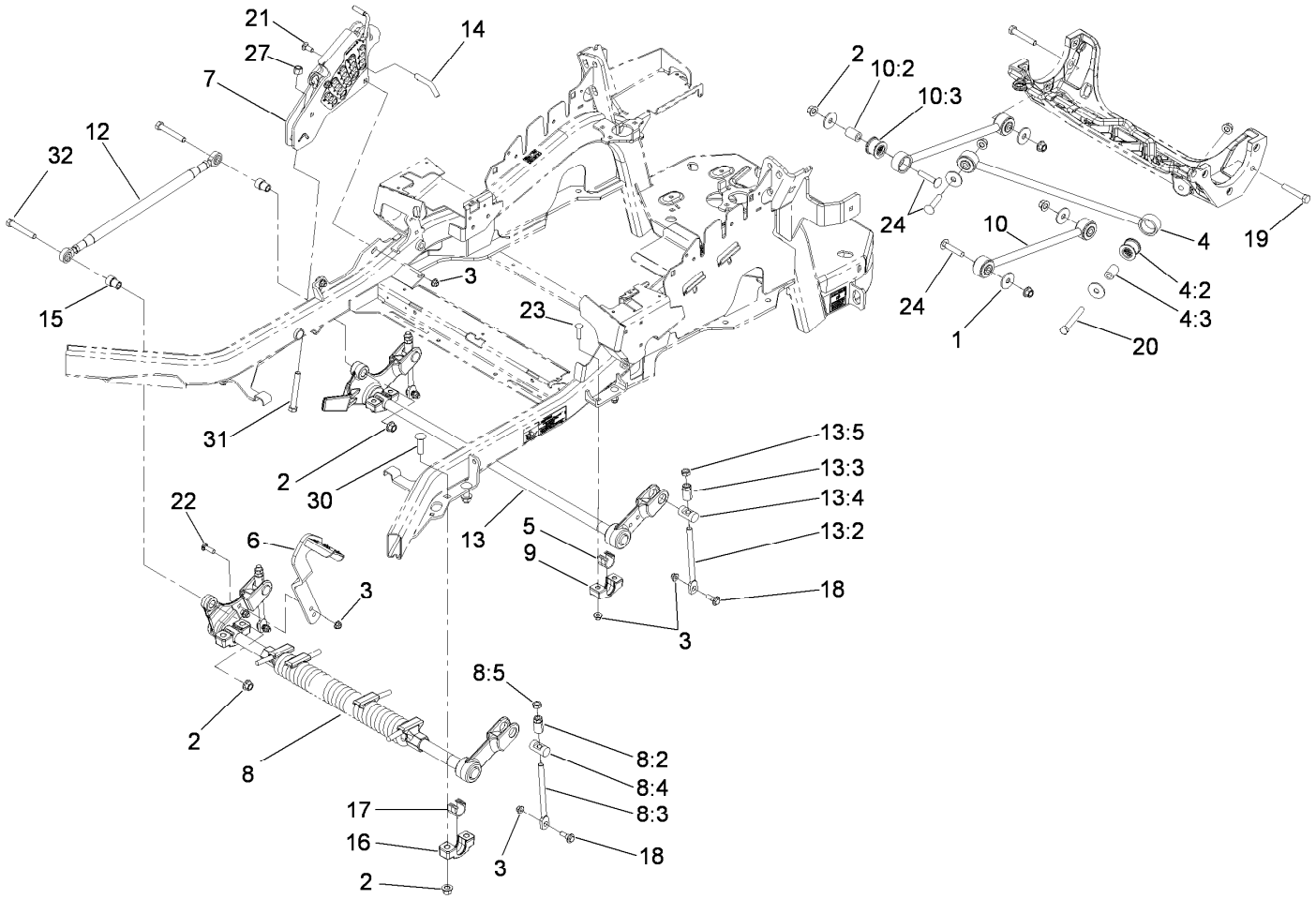

Deck Lift Assembly

Ref.	Part Number	Qty.	Description
1	86-1990	6	Washer
2	99-5107	12	Nut-Lock
3	104-8301	12	Nut-Flange, NI
4	109-5013	1	Panhard Rod ASM
4:2	109-5009	2	Bushing-Suspension, Rubber
4:3	109-5010	2	Spacer
5	109-7173	2	Bearing-Cross, Rear Shaft
6	109-8737-01	1	Pedal-Foot
7	117-3842	1	Height-Of-Cut ASM
8	116-0358	1	Front Deck Lift ASM
8:2	109-7840	2	Adjuster-Lift, Deck
8:3	109-8007	2	Link-Adjuster, Deck Lift
8:4	109-8353	2	Trunnion
8:5	3218-5	2	Nut-Jam
9	109-7171-03	2	Support-Bearing, Cross Shaft
10	109-7952	2	Deck Strut ASM
10:2	109-5009	2	Bushing-Suspension, Rubber
10:3	109-5010	2	Spacer
12	116-0806	1	Side Link ASM

Ref.	Part Number	Qty.	Description
13	116-0362	1	Rear Deck Lift ASM
13:2	109-8007	2	Link-Adjuster, Deck Lift
13:3	109-7840	2	Adjuster-Lift, Deck
13:4	109-8353	2	Trunnion
13:5	3218-5	2	Nut-Jam
14	109-8757	1	Pin-HOC
15	116-0795	2	Bushing-Flange
16	109-9409	2	Support-Cross Shaft, Bearing Front
17	109-9410	2	Bearing-Shaft Front, Cross
18	109-9840	4	Screw-Shoulder, HHF
19	325-12	2	Screw-HH
20	325-17	1	Screw-HH
21	3231-2	2	Screw-CARR
22	3231-28	2	Screw-CARR
23	3231-4	4	Screw-CARR
24	3233-34	3	Screw-CARR
27	3296-23	1	Nut-Lock, NI
30	3233-37	4	Screw-CARR, Short Neck
31	116-0559	1	Bolt-TAP
32	325-13	2	Screw-HH

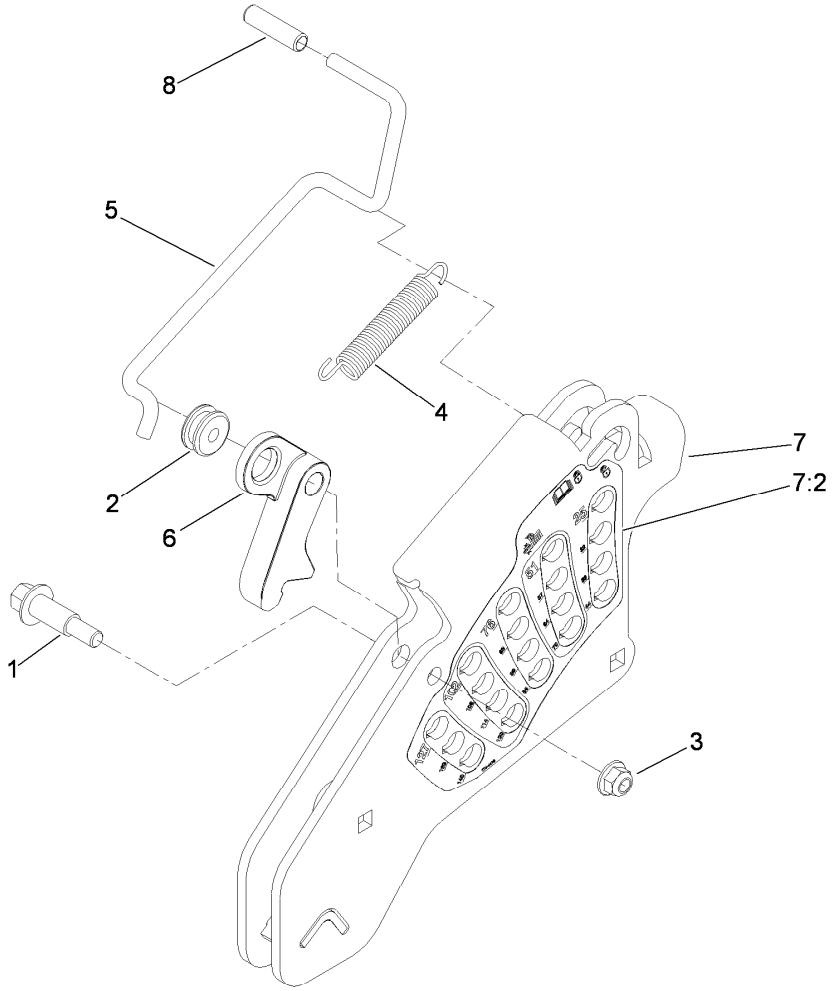

Height-of-Cut Assembly No. 117-3842

Ref.	*Part Number*	*Qty.*	*Description*
1	62-1330	1	Bolt-Shoulder
2	109-7130	1	Grommet
3	104-8301	1	Nut-Flange, NI
4	109-7124	1	Spring-Extension
5	109-7128	1	Rod-Lock, Transport
6	116-0118	1	Pawl-Transport, HOC
7	117-3837	1	Plate-Height Adjuster
7:2	114-4470	1	Decal-HOC
8	109-8250	1	Grip-Lever

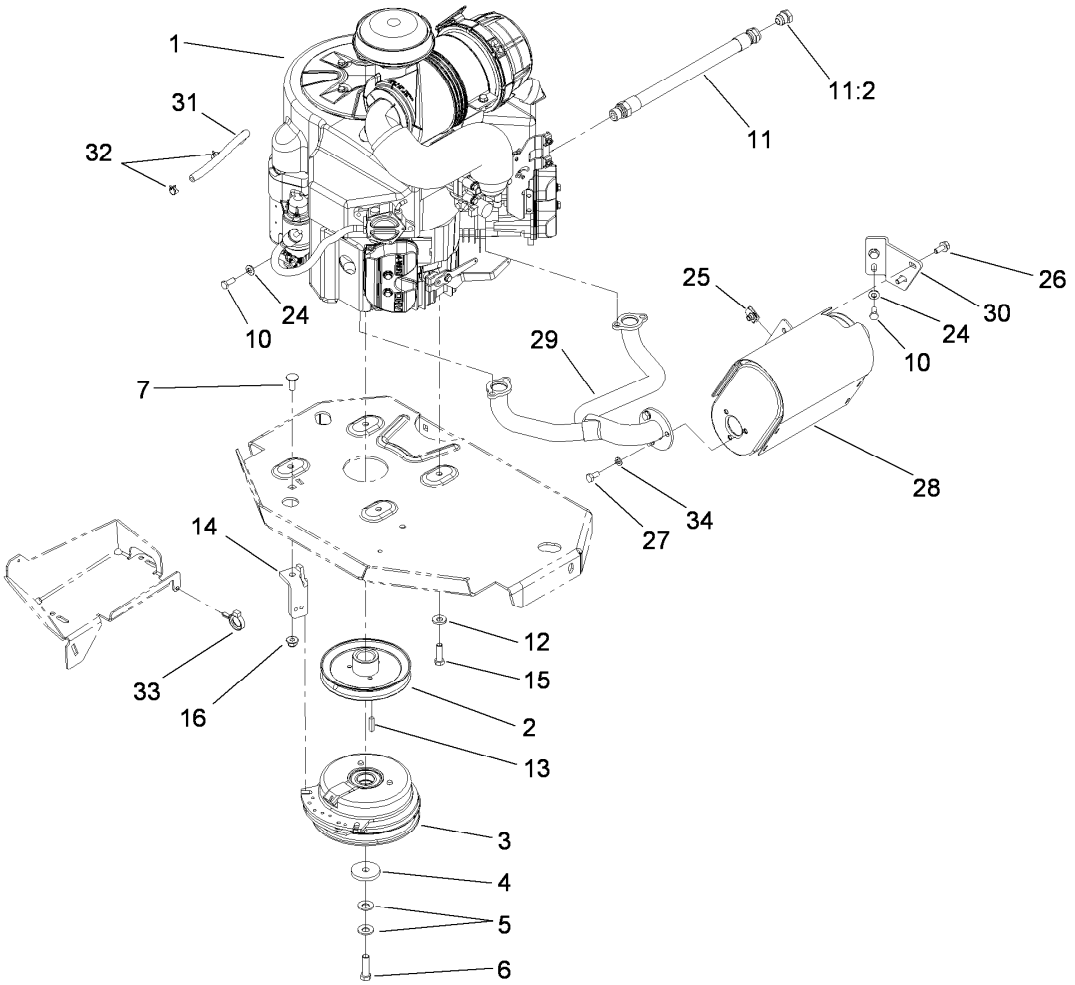

Engine, Muffler and Clutch Assembly

Ref.	Part Number	Qty.	Description
1		1	Engine-Kawasaki, Fx801V-As04 ●■
2	109-9905	1	Sheave
3	109-9282	1	Clutch
4	109-6919	1	Washer-Clutch
5	1-603610	2	Washer-Spring
6	109-9761	1	Screw-HH W/Loctite
7	3231-22	1	Screw-CARR
10	33114-020	3	Screw-HH
11	109-4490	1	Oil Drain Hose ASM
11:2	109-1012	1	Plug
12	98-5975	4	Washer-Belleville
13	1-807259	1	Key
14	109-8138-01	1	Anchor-Clutch
15	323-7	4	Screw-HH
16	104-8301	1	Nut-Flange, NI
24	1-303334	3	Washer-Spring
25	94-2413	2	U-Nut
26	3234-5	2	Screw-HHF
27	322-2	3	Screw-HH
28	109-9280	1	Muffler-Engine
29	109-9250	1	Manifold-Exhaust
30	116-0203	1	Bracket-Muffler
31	109-0296	1	Hose-Fuel
32	2412-98	2	Clamp
33	105-1853	1	Clamp-Hose
34	3253-4	3	Washer-Lock

● Not serviced separately

■ Obtain parts from www.kawpowerepc.com

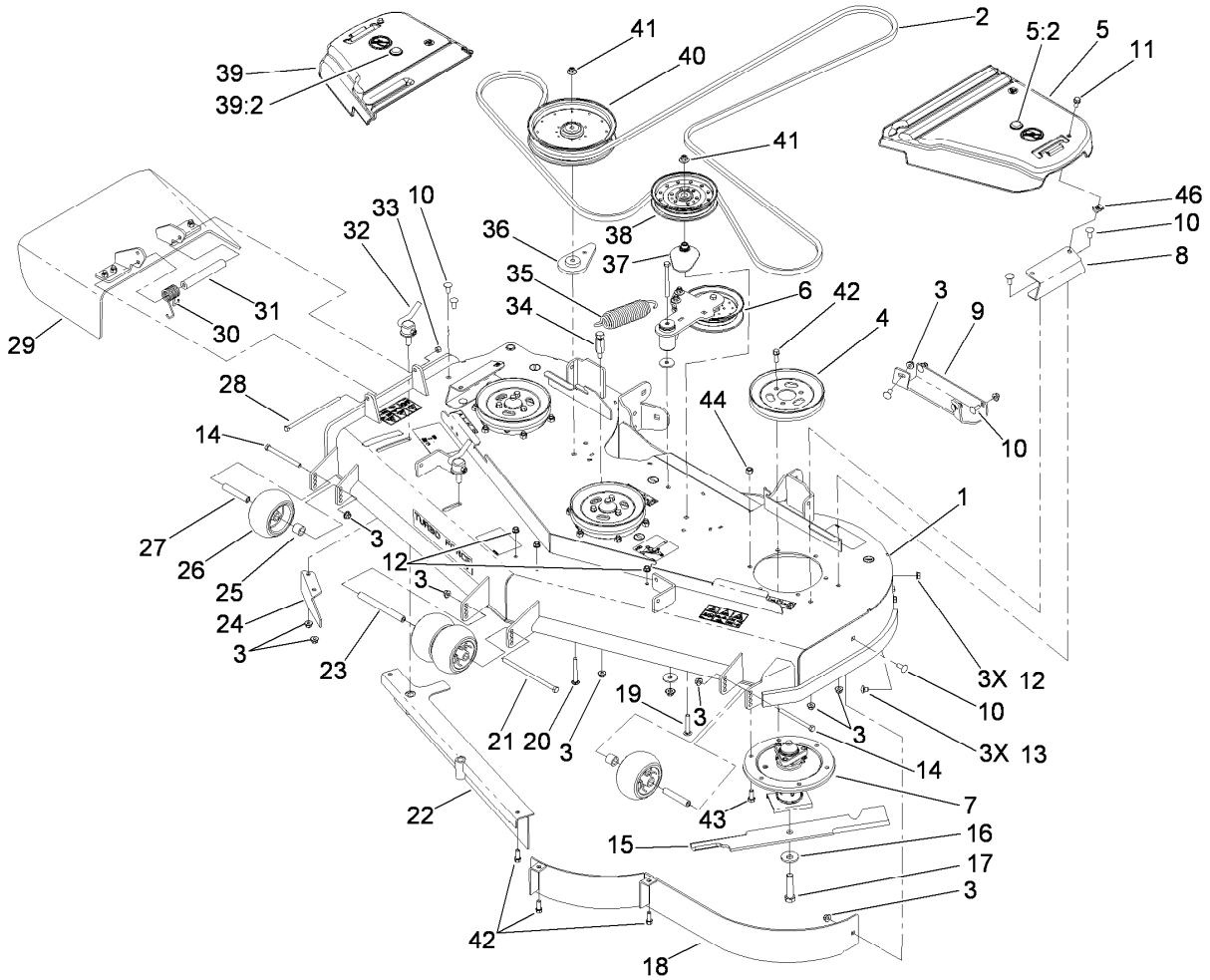

Deck Assembly

Ref.	Part Number	Qty.	Description
1	117-3800	1	Deck Decal ASM
2	114-5858	1	Belt-V
3	104-8301	15	Nut-Flange, NI
4	105-7734	3	Pulley
5	117-7816	1	LH Belt Cover ASM
5:2	117-3824	1	Plug-Plastic
6		1	Idler Arm ASM ●
7	108-7713	3	Spindle ASM
8	114-5882-01	2	Bracket-Cover, Belt
9	105-8792-01	1	Plate-Skid
10	3231-27	11	Screw-CARR
11	3234-5	2	Screw-HHF
12	3290-357	6	Nut-HHF, Whiz
13	108-5387	3	Screw-CARR
14	323-23	2	Screw-HH
15	105-7718-03	3	Blade-Hi Flow
16	103-0865	3	Washer-Blade Bolt, Heavy
17	103-0862	3	Screw-Cap
18	114-5842-01	1	Baffle ASM
19	3231-40	1	Bolt-CARR
20	3231-42	1	Screw-CARR
21	108-5388	1	Screw-HH
22	105-7669-01	1	Baffle ASM
23	98-5967	1	Spacer-Wheel

Ref.	Part Number	Qty.	Description
24	106-3216-01	1	Baffle-Discharge
25	98-7913	2	Tube-Spacer
26	1-603299	4	Roller-Scalp, Anti
27	98-7912	2	Tube-Spanner
28	322-50	1	Screw-HH
29	108-2792	1	Rubber Deflector ASM
30	108-4052	1	Spring-Torsion
31	105-4622	1	Spacer
32	107-1664	2	Lever ASM
33	3296-29	1	Nut-Lock, NI
34	114-5867	1	Anchor-Spring, Tall
35	116-0133	1	Extension-Spring
36	109-9416	1	Spacer-Idler
37	109-2872	1	Spacer-Pulley
38	114-5895	1	Pulley-Idler, Flat
39	117-7815	1	RH Belt Cover ASM
39:2	117-3824	1	Plug-Plastic
40	109-8590	1	Pulley-Idler
41	109-6658	2	Nut-Flange, NI
42	92-1624	12	Screw-HWH
43	33115-025	18	Screw-HH
44	33025-00	18	Nut-Lock
46	94-2413	2	U-Nut

● Not serviced separately

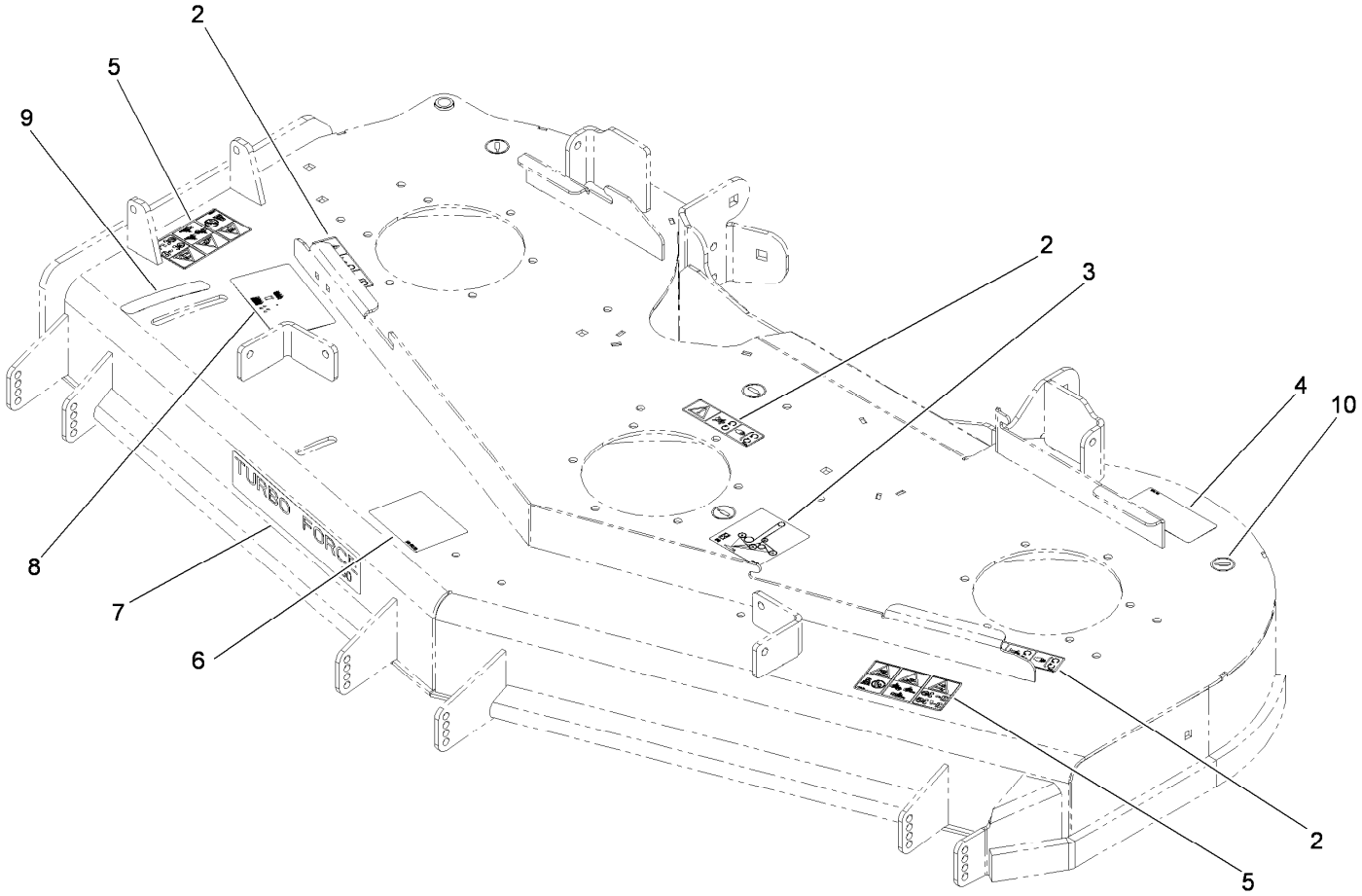

Deck Decal Assembly No. 117-3800

Ref.	*Part Number*	*Qty.*	*Description*
2	112-9028	3	Decal-Cover Missing
3	115-7445	1	Decal-Routing, Deck Belt
4	93-7818	1	Decal-Torque, Blade Bolt
5	117-3848	2	Decal-Danger
6	99-8939	1	Decal-Anti Scalp
7	107-1619	1	Decal
8	110-2068	1	Decal-Adjustment, Baffle
9	110-2067	1	Decal-Setting, Baffle
10	58-6520	4	Decal-Grease

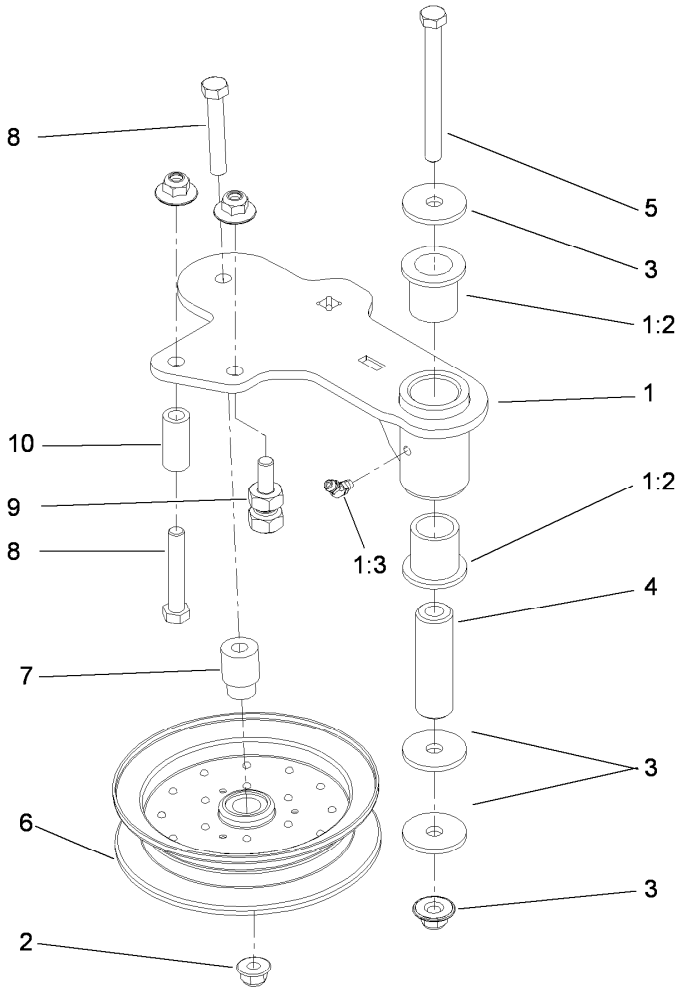

Idler Assembly

Ref.	Part Number	Qty.	Description
1	114-5870	1	Idler Arm ASM
1:2	1-303514	2	Bearing-Flanged
1:3	1481	1	Fitting-Grease
2	109-6658	4	Nut-Flange, NI
3	1-213069	3	Washer
4	114-5848	1	Spacer-Plain
5	98-5961	1	Screw-HH
6	103-8743	1	Pulley-Idler, Flanged
7	112-4212	1	Mount-Pulley
8	323-11	2	Screw-HH
9	114-5866	1	Anchor-Spring, Short
10	104-0151	1	Spacer

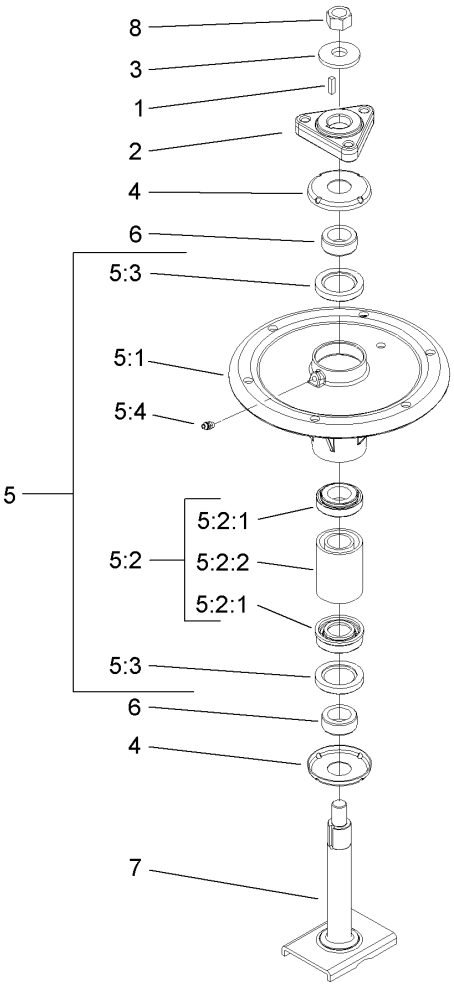

Spindle Assembly No. 108-7713

Ref.	*Part Number*	*Qty.*	*Description*
1	10-8040	1	Key-Square
2	106-3277	1	Hub-Pulley
3	103-0865	1	Washer-Blade Bolt, Heavy
4	106-3204	2	Shield-Bearing
5		1	Spindle Bearing ASM ●
5:1	106-3211	1	Housing-Spindle
5:2	108-7711	1	Bearing ASM
5:2:1	108-7710	1	Bearing ASM
5:2:2	106-3206	1	Spacer (Matched Set)
5:3	253-133	2	Seal-Oil
5:4	302-5	1	Fitting-Grease
6	106-3218	2	Spacer-Seal
7	106-3233	1	Spindle Shaft ASM
8	3219-6	1	Nut-Hex

● Not serviced separately

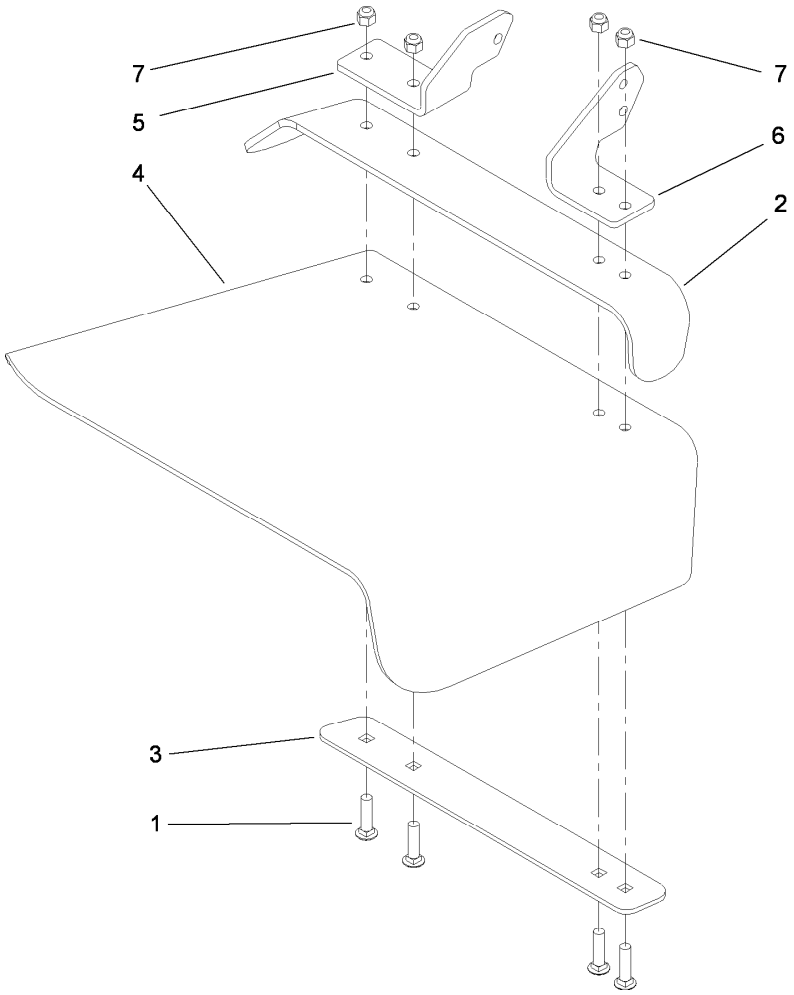

Rubber Deflector Assembly No. 108-2792

Ref.	*Part Number*	*Qty.*	*Description*
1	3231-4	4	Screw-CARR
2	106-3246-01	1	Deflector
3	106-3248-03	1	Strap-Discharge
4	108-5029	1	Deflector-Rubber
5	108-4059-01	1	Plate-Hinge, Rear
6	106-3253-01	1	Plate-Hinge, Front
7	3296-39	4	Nut-Lock, NI

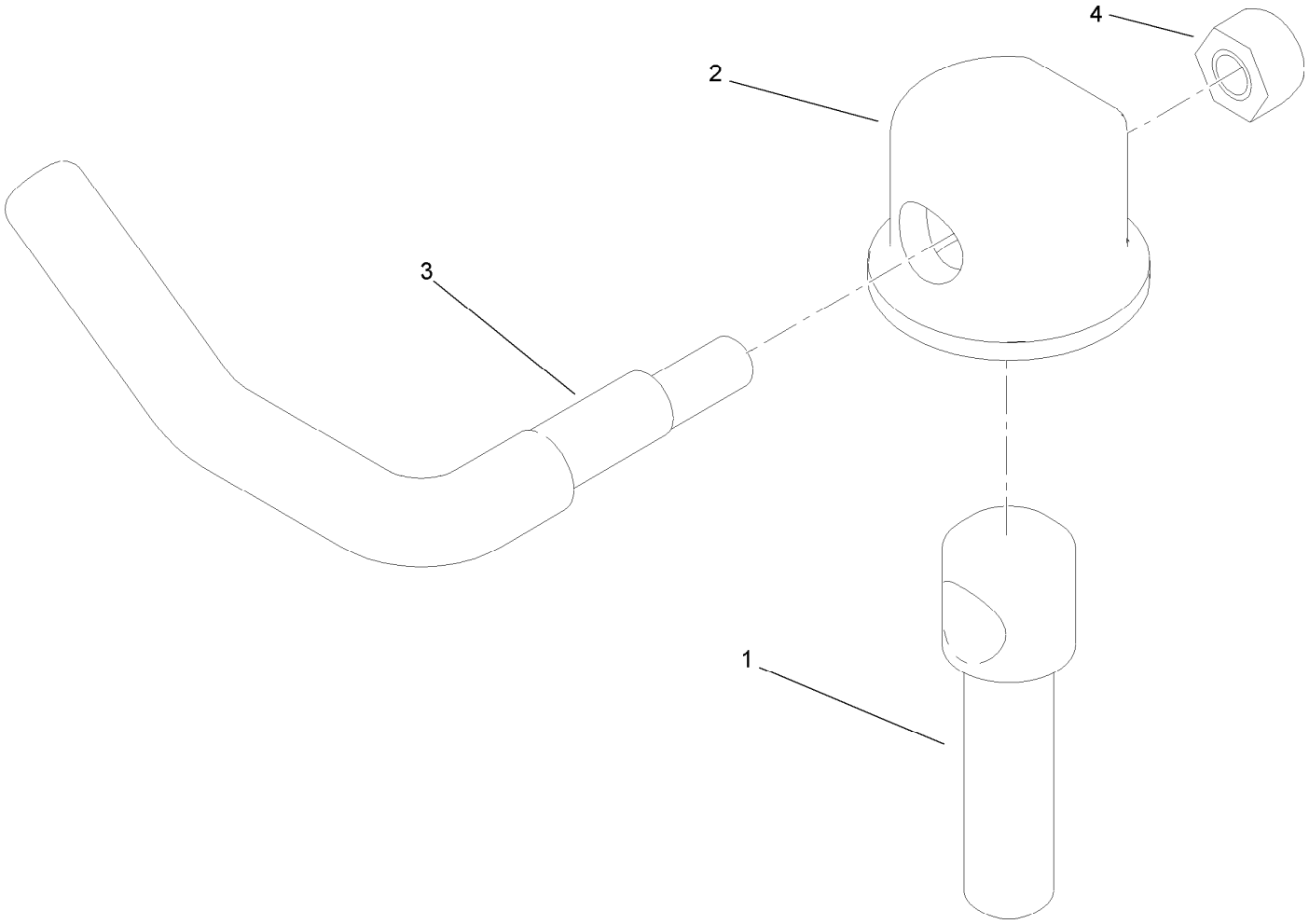

Lever Assembly No. 107-1664

Ref.	*Part Number*	*Qty.*	*Description*
1	106-3239	1	Screw-Lock
2	107-1644	1	Cap-Lock
3	106-3241	1	Lever-Lock
4	3296-29	1	Nut-Lock, NI

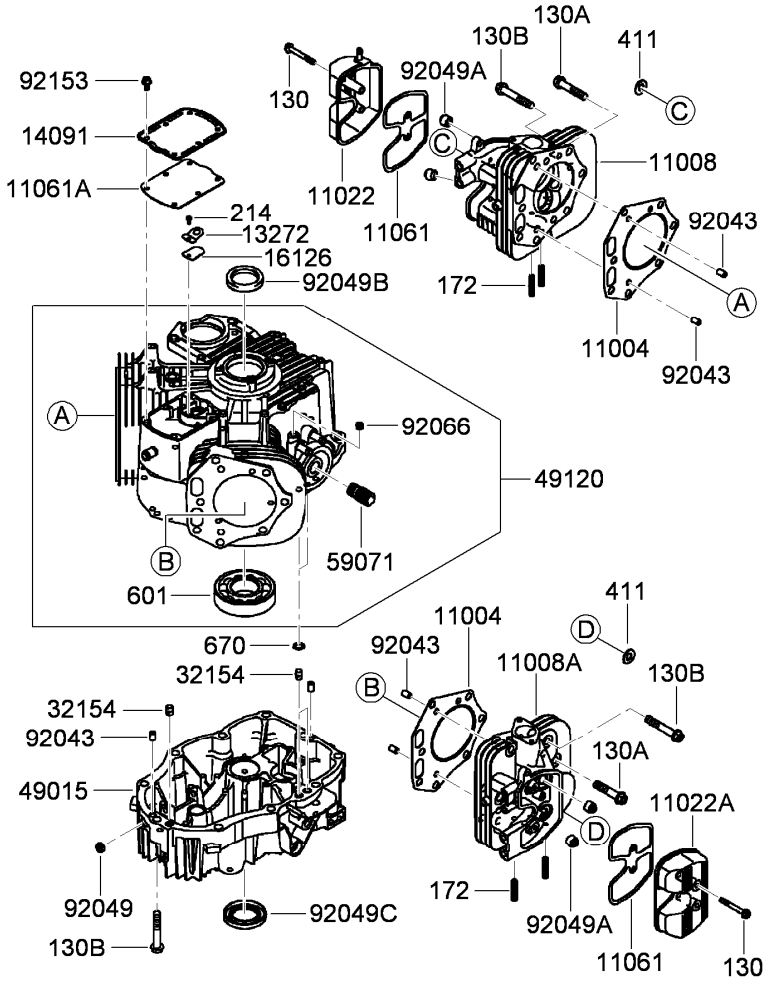

Cylinder and Crankcase Assembly
Kawasaki FX801V-AS04

Ref.	Part Number	Qty.	Description
130	130AA0650	4	Bolt-Flanged (6X50) ●
130A	130CA1050	2	Bolt-Flanged (10X50) ●
130B	130CA1060	20	Bolt-Flanged (10X60) ●
172	172BA0818	4	Bolt-Stud (8X18) ●
214	214AA0408	1	Screw-Pan +-(4X8) ●
411	411AA1000	2	Washer-Plain (10Mm) ●
601	601A6308	1	Bearing-Ball ●
670	670B2011	2	O-Ring (11Mm) ●
11004	11004-7025	2	Gasket-Head ●
11008	11008-7036	1	Head-Cylinder, No.1 ●
11008A	11008-7037	1	Head-Cylinder, No.2 ●
11022	11022-6007	1	Case-Rocker, No.1 ●
11022A	11022-7016	1	Case-Rocker, No.2 ●
11061	11061-7080	2	Gasket-Case, Rocker ●
11061A	11061-7081	1	Gasket-Breather ●
13272	13272-7004	1	Plate-Breather ●

Ref.	Part Number	Qty.	Description
14091	14091-7060	1	Cover-Breather ●
16126	16126-7020	1	Valve-Breather ●
32154	32154-7019	3	Pipe ●
49015	49015-7088	1	Cover-Crankcase ●
49120	49120-7117	1	Crankcase ●
59071	59071-2079	1	Joint ●
92043	92043-7024	6	Pin ●
92049	92049-7005	1	Seal-Oil, S O (8X14X5 H S) ●
92049A	92049-7020	4	Seal-Oil (7X15X13) ●
92049B	92049-7024	1	Seal-Oil, S D (40X54X9 R Hs) ●
92049C	92049-7026	1	Seal-Oil, S D (40X62X8 L Vs) ●
92066	92066-7026	1	Plug ●
92153	92153-7043	6	Bolt (6X12) ●

● Obtain parts from www.kawpowerepc.com

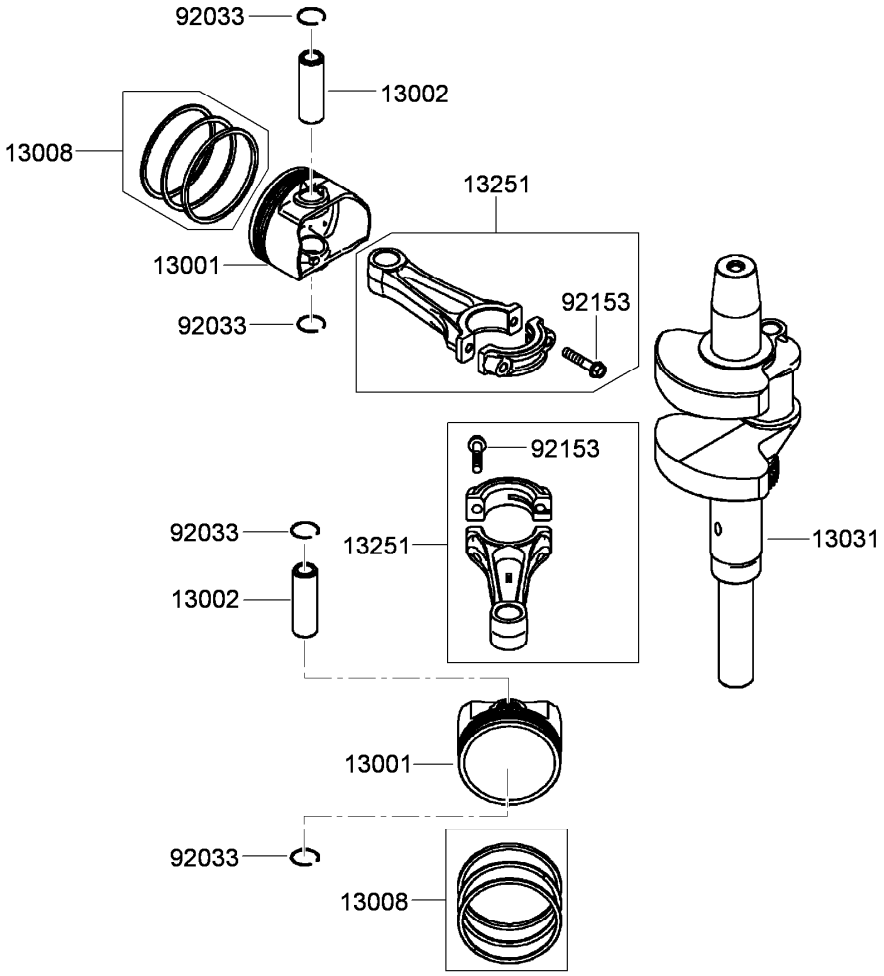

Piston and Crankshaft Assembly
Kawasaki FX801V-AS04

Ref.	*Part Number*	*Qty.*	*Description*
13001	13001-7025	2	Piston-Engine ●
13002	13002-7005	2	Pin-Piston ●
13008	13008-6069	2	Piston Ring Set ●
13031	13031-7079	1	Crankshaft ●
13251	13251-7019	2	Connecting Rod ASM ●
92033	92033-7013	4	Ring-Snap ●
92153	92153-2054	4	Bolt (7X35.2) ●

● Obtain parts from www.kawpowerepc.com

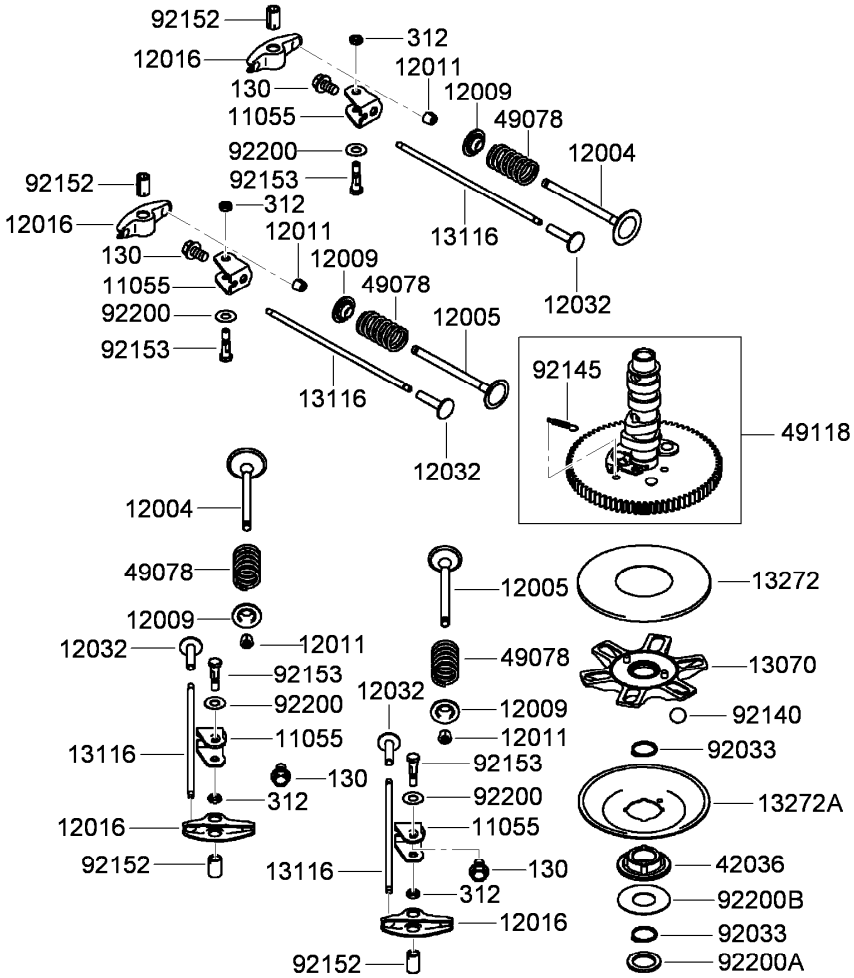

Valve and Camshaft Assembly
Kawasaki FX801V-AS04

Ref.	Part Number	Qty.	Description
130	130AA0814	4	Bolt-Flanged (8X14) ●
312	312AA0600	4	Nut-Hex (6Mm) ●
11055	11055-7009	4	Bracket ●
12004	12004-7007	2	Valve-Intake ●
12005	12005-7008	2	Valve-Exhaust ●
12009	12009-7002	4	Retainer-Spring, Valve ●
12011	12011-2052	8	Collet ●
12016	12016-7016	4	Arm-Rocker ●
12032	12032-7001	4	Tappet ●
13070	13070-7016	1	Guide ●
13116	13116-7006	4	Rod-Push ●
13272	13272-7002	1	Plate ●
13272A	13272-7003	1	Plate-Governor ●
42036	42036-7019	1	Sleeve ●
49078	49078-7005	4	Spring-Valve, Engine ●
49118	49118-7021	1	Camshaft ●
92033	92033-7012	2	Ring-Snap (Dia 18.5) ●
92140	92140-7005	6	Ball ●
92145	92145-7001	1	Spring ●
92152	92152-7012	4	Collar ●
92153	92153-7100	4	Bolt (6X29.5) ●
92200	92200-2151	4	Washer (8.1X18X0.5) ●
92200A	92200-7044	1	Washer (20.3X29X2.28) ●
92200B	92200-7045	1	Washer (20X46X0.91) ●

● Obtain parts from www.kawpowerepc.com

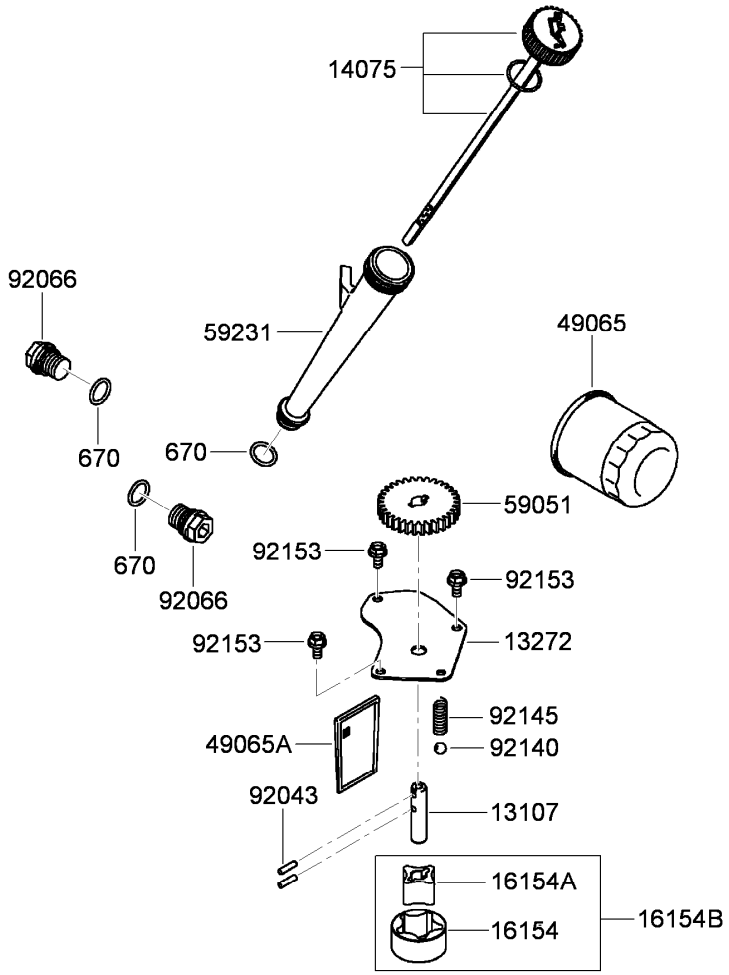

Lubrication Equipment Assembly
Kawasaki FX801V-AS04

Ref.	*Part Number*	*Qty.*	*Description*
670	670D2016	3	O-Ring (16Mm) ●
13107	13107-7009	1	Shaft ●
13272	13272-7005	1	Plate ●
14075	14075-7012	1	Cap ASM ●
16154	16154-1075	1	Rotor-Pump, Outer ●
16154A	16154-1076	1	Rotor-Pump, Inner ●
16154B	16154-1079	1	Rotor-Pump ●
49065	49065-2078	1	Filter-Oil ●
49065A	49065-7004	1	Filter-Oil ●
59051	59051-7011	1	Gear-Spur ●
59231	59231-7014	1	Filler ●
92043	92043-7003	2	Pin ●
92066	92066-7003	2	Plug ●
92140	92140-7003	1	Ball ●
92145	92145-7002	1	Spring ●
92153	92153-7043	3	Bolt (6X12) ●

● Obtain parts from www.kawpowerepc.com

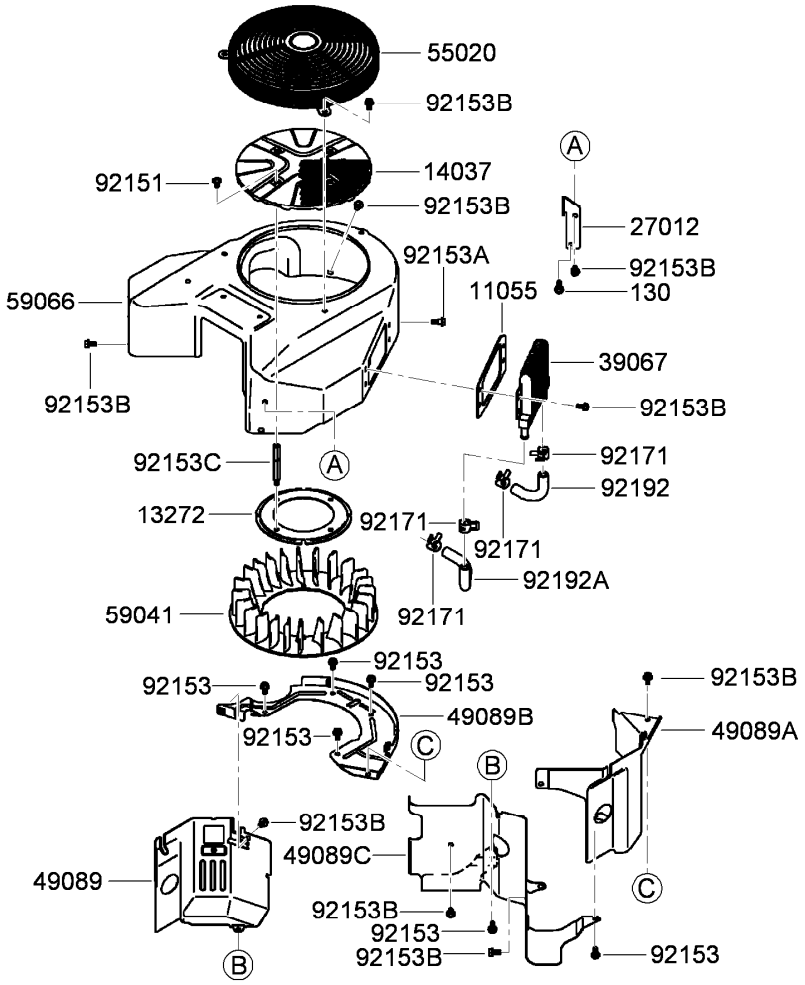

Cooling Equipment Assembly
Kawasaki FX801V-AS04

Ref.	*Part Number*	*Qty.*	*Description*
130	130AA0620	1	Bolt-Flanged (6X20) ●
11055	11055-7005	1	Bracket ●
13272	13272-7006	1	Plate-Fan ●
14037	14037-7029-9H	1	Screen ●
27012	27012-7006	1	Hook-Lift ●
39067	39067-7007	1	Cooler-Oil ●
49089	49089-7064-753	1	Shroud-Engine, No.1 ●
49089A	49089-7065-753	1	Shroud-Engine, No.2 ●
49089B	49089-7066	1	Shroud-Engine, Rear ●
49089C	49089-7067-753	1	Shroud-Engine, V-Bank ●
55020	55020-7016-9H	1	Guard ●
59041	59041-7013	1	Fan ●
59066	59066-7042-753	1	Housing-Fan ●
92151	92151-7012	4	Bolt (6X12) ●
92153	92153-0010	6	Bolt ●
92153A	92153-7007	1	Bolt ●
92153B	92153-7043	14	Bolt (6X12) ●
92153C	92153-7101	4	Bolt ●
92171	92171-7015	4	Clamp ●
92192	92192-7089	1	Tube ●
92192A	92192-7090	1	Tube ●

● Obtain parts from www.kawpowerepc.com

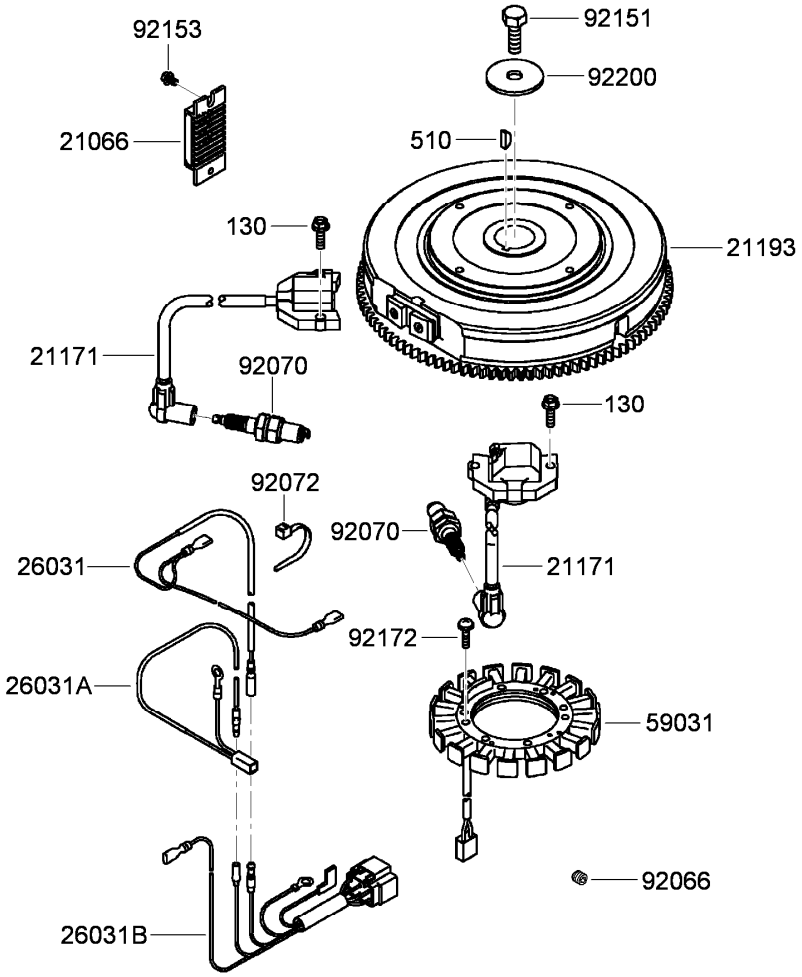

Electric Equipment Assembly
Kawasaki FX801V-AS04

Ref.	*Part Number*	*Qty.*	*Description*
130	130AA0620	4	Bolt-Flanged (6X20) ●
510	510A5100	1	Key-Woodruff ●
21066	21066-7011	1	Regulator-Voltage ●
21171	21171-7036	2	Ignition Coil ASM ●
21193	21193-7035	1	Flywheel ASM ●
26031	26031-7033	1	Harness ●
26031A	26031-7034	1	Harness ●
26031B	26031-7039	1	Harness ●
59031	59031-7017	1	Coil-Charging ●
92066	92066-7026	1	Plug ●
92070	92070-7004	2	Sparkplug (B P R4 E S (N G K) Solid) ●
92072	92072-7003	3	Band ●
92151	92151-2097	1	Bolt (12X30) ●
92153	92153-7029	2	Bolt ●
92172	92172-7018	4	Screw (5X20) ●
92200	92200-7040	1	Washer (12.2X46X3) ●

● Obtain parts from www.kawpowerepc.com

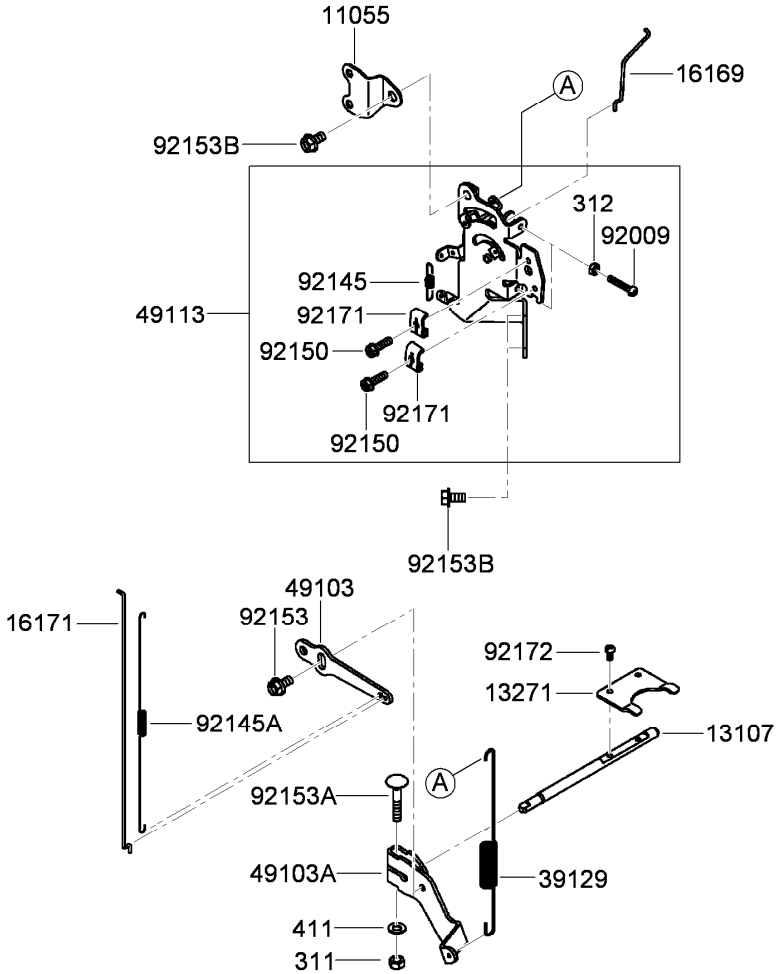

Control Equipment Assembly
Kawasaki FX801V-AS04

Ref.	*Part Number*	*Qty.*	*Description*
311	311AA0600	1	Nut-Hex (6Mm) ●
312	312AA0500	2	Nut-Hex (5Mm) ●
411	411AA0600	1	Washer-Plain (6Mm) ●
11055	11055-7001	1	Bracket ●
13107	13107-7044	1	Shaft-Governor ●
13271	13271-7038	1	Plate ●
16169	16169-7019	1	Link-Choke ●
16171	16171-7020	1	Link ●
39129	39129-7020	1	Spring-Governor ●
49103	49103-7012	1	Arm-Governor ●
49103A	49103-7013	1	Arm-Governor ●
49113	49113-7046	1	Panel-Control ●
92009	92009-2381	2	Screw (5X30) ●
92145	92145-7044	1	Spring ●
92145A	92145-7055	1	Spring ●
92150	92150-2182	2	Bolt (5X18) ●
92153	92153-0009	1	Bolt (6X12) ●
92153A	92153-7033	1	Bolt (6X35) ●
92153B	92153-7043	3	Bolt (6X12) ●
92171	92171-7018	2	Clamp ●
92172	92172-7033	2	Screw (4X8) ●

● Obtain parts from www.kawpowerepc.com

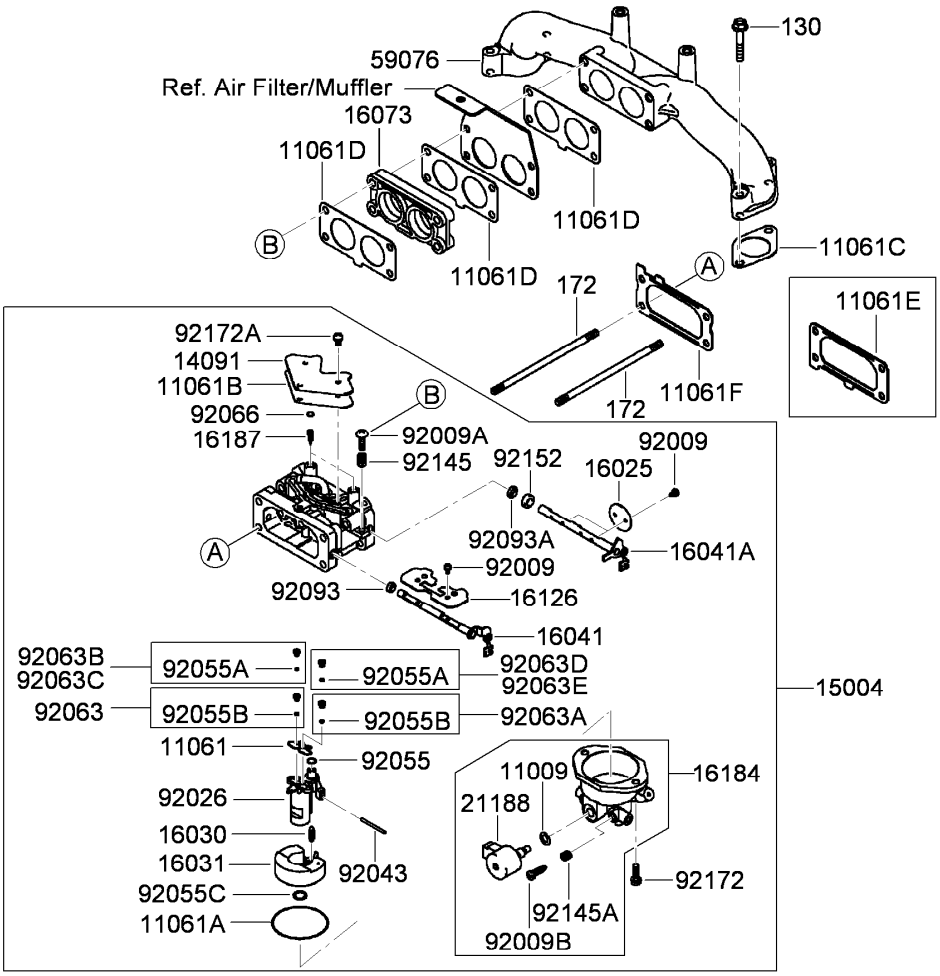

Carburetor Assembly
Kawasaki FX801V-AS04

Ref.	Part Number	Qty.	Description
130	130AA0635	4	Bolt-Flanged (6X35) ●
172	172BA06120	2	Bolt-Stud (6X120) ●
11009	11009-2056	1	Gasket ●
11061	11061-7037	1	Gasket ●
11061A	11061-7038	1	Gasket ●
11061B	11061-7039	1	Gasket ●
11061C	11061-7070	2	Gasket (Head To Manifold) ●
11061D	11061-7072	3	Gasket (Carburetor To Manifold) ●
11061E	11061-7078	1	Gasket (Carburetor To Pipe) (This Part May Be Used As Substitute For 11061-7091) ●
11061F	11061-7091	1	Gasket (Carburetor To Pipe) ●
14091	14091-7031	1	Cover ●
15004	15004-7044	1	Carburetor ASM ●
16025	16025-7010	2	Valve-Throttle ●
16030	16030-7004	1	Valve-Float ●
16031	16031-7003	1	Float ●
16041	16041-7039	1	Shaft-Carburetor ●
16041A	16041-7042	1	Shaft-Carburetor ●
16073	16073-7011	1	Insulator ●
16126	16126-7021	1	Valve ●

Ref.	Part Number	Qty.	Description
16184	16184-7021	1	Float Chamber ASM ●
16187	16187-7005	2	Needle-Jet ●
21188	21188-7003	1	Solenoid ●
59076	59076-7013	1	Manifold-Intake ●
92009	92009-7003	6	Screw ●
92009A	92009-7004	1	Screw ●
92009B	92009-7006	1	Screw-Drain ●
92026	92026-7024	1	Spacer ●
92043	92043-7014	1	Pin ●
92055	92055-7012	1	O-Ring ●
92055A	92055-7013	1	O-Ring ●
92055B	92055-7013	2	O-Ring ●
92055C	92055-7016	1	O-Ring ●
92063	92063-7110	1	Jet-Main, No.118 ●
92063A	92063-7111	1	Jet-Main, No.120 ●
92063B	92063-7135	1	Jet-Main, No.115 (3280 Ft) ●
92063C	92063-7136	1	Jet-Main, No.112 (6560 Ft) ●
92063D	92063-7137	1	Jet-Main, No.117 (3280 Ft) ●
92063E	92063-7138	1	Jet-Main, No.114 (6560 Ft) ●
92066	92066-7009	2	Plug-Expansion ●
92093	92093-7001	1	Seal (I D 5.9) ●
92093A	92093-7002	1	Seal (I D 6.9) ●
92145	92145-7010	1	Spring ●
92145A	92145-7011	1	Spring ●

● Obtain parts from www.kawpowerepc.com

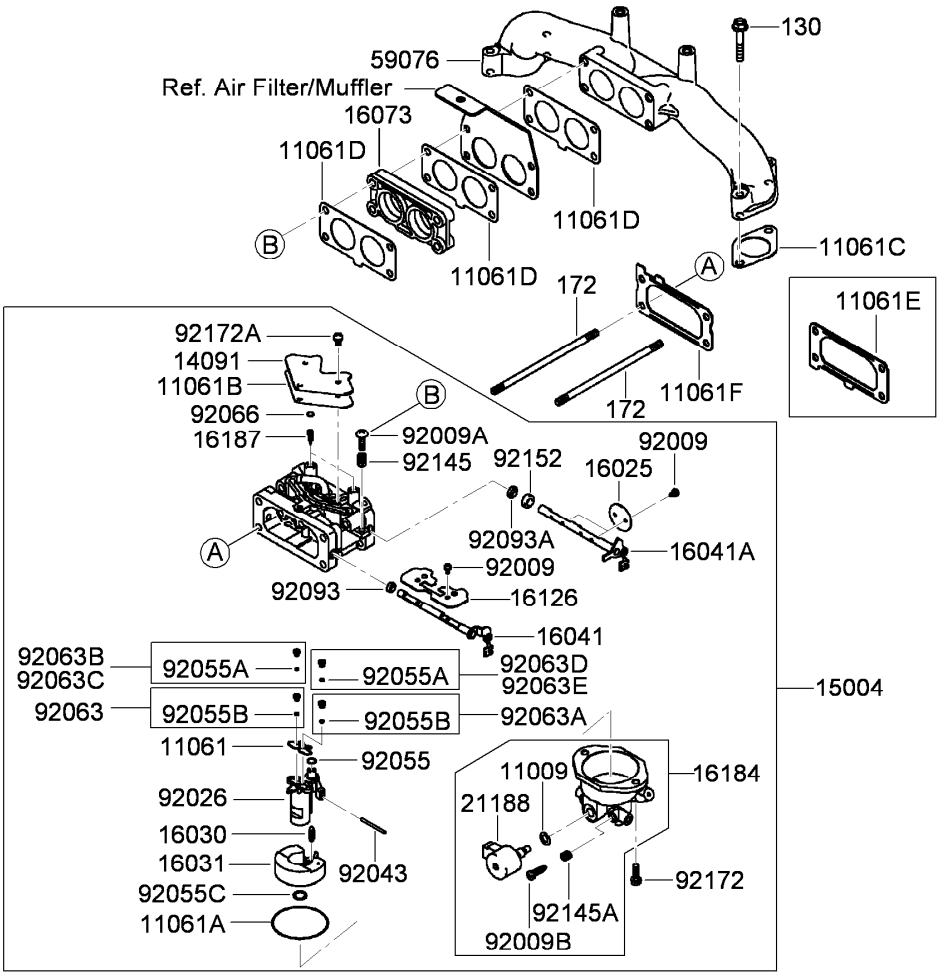

Carburetor Assembly
Kawasaki FX801V-AS04 (continued)

Ref.	Part Number	Qty.	Description
92152	92152-7005	1	Collar ●

Ref.	Part Number	Qty.	Description
92172	92172-7005	2	Screw (M5) ●
92172A	92172-7006	3	Screw (M4) ●

● Obtain parts from www.kawpowerepc.com

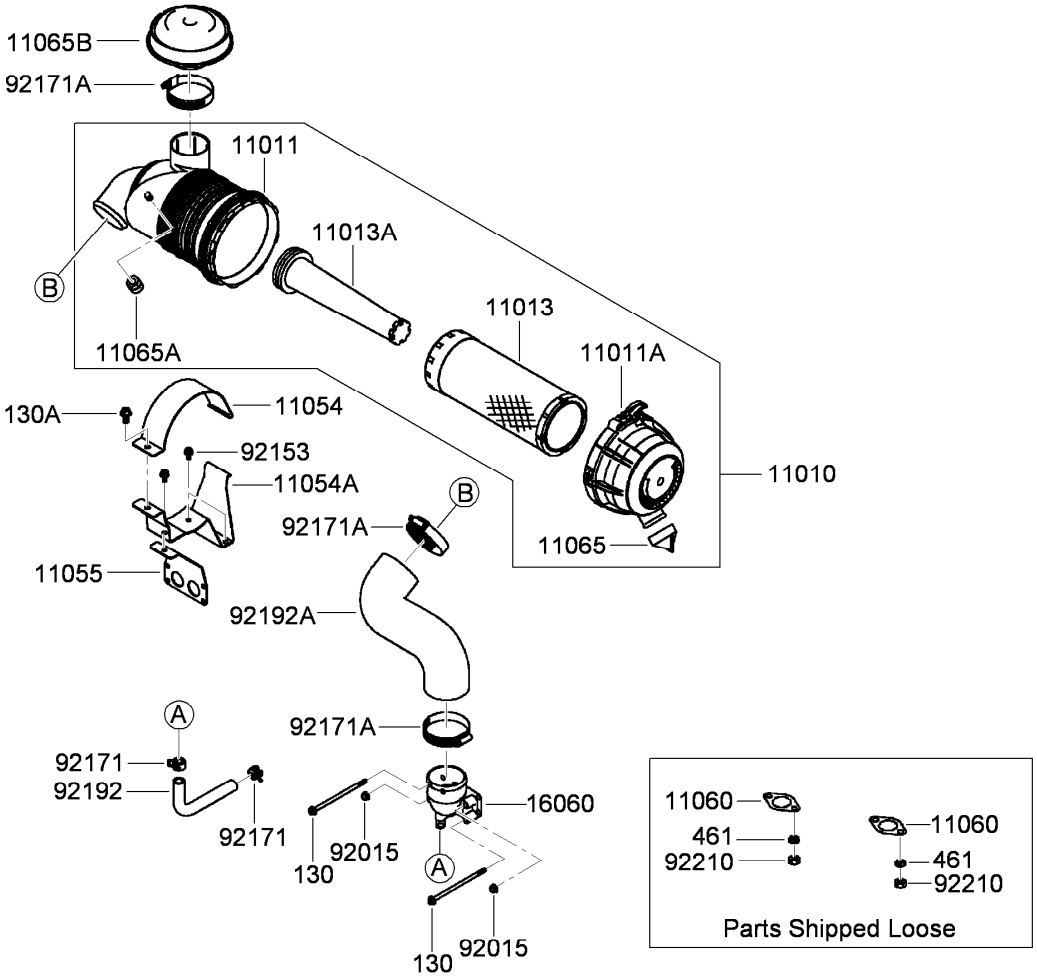

Air Filter and Muffler Assembly
Kawasaki FX801V-AS04

Ref.	*Part Number*	*Qty.*	*Description*
130	130AA06120	2	Bolt-Flanged (6X120) ●
130A	130AA0816	1	Bolt-Flanged (8X16) ●
461	461DA0800	4	Washer-Spring (8Mm) ●
11010	11010-7020	1	Air Filter ASM ●
11011	11011-7047	1	Case-Filter, Air ●
11011A	11011-7050	1	Case-Filter, Air ●
11013	11013-7038	1	Element-Filter, Air ●
11013A	11013-7039	1	Element-Filter, Air ●
11054	11054-7013-9X	1	Bracket ●
11054A	11054-7016-9X	1	Bracket ●
11055	11055-7007-9X	1	Bracket ●
11060	11060-7016	2	Gasket-Muffler ●
11065	11065-7008	1	Cap ●
11065A	11065-7009	1	Cap ●
11065B	11065-7017	1	Cap ●
16060	16060-6007	1	Pipe-Intake ●
92015	92015-1367	2	Nut ●
92153	92153-7043	3	Bolt (6X12) ●
92171	92171-7013	2	Clamp ●
92171A	92171-7023	3	Clamp-Filter, Air ●
92192	92192-7086	1	Tube ●
92192A	92192-7087	1	Tube ●
92210	92210-7027	4	Nut (M8) ●

● Obtain parts from www.kawpowerepc.com

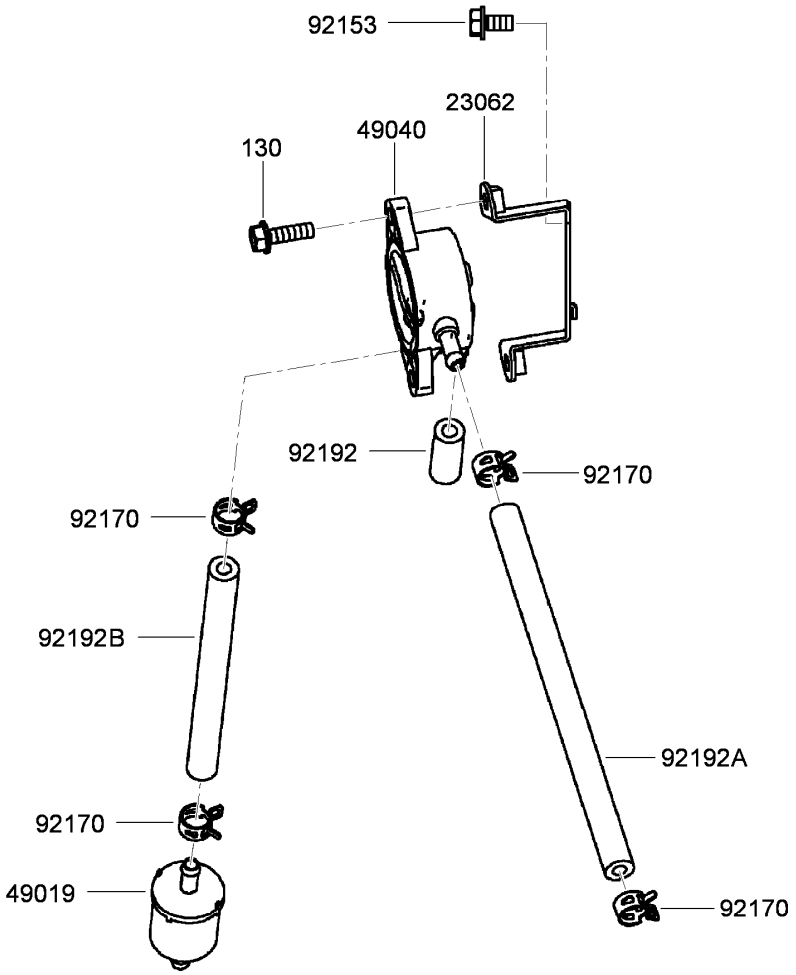

Fuel Tank and Fuel Valve Assembly Kawasaki FX801V-AS04

Ref.	*Part Number*	*Qty.*	*Description*
130	130AA0620	2	Bolt-Flanged (6X20) ●
23062	23062-7018	1	Bracket ●
49019	49019-7001	1	Filter-Fuel ●
49040	49040-7001	1	Pump-Fuel ●
92153	92153-7043	1	Bolt (6X12) ●
92170	92170-2009	4	Clamp ●
92192	92192-7088	1	Tube (6.4X12.7X28.5) ●
92192A	92192-7137	1	Tube (6.35X12.7X195) ●
92192B	92192-7144	1	Tube (6.35X12.7X140) ●

● Obtain parts from www.kawpowerepc.com

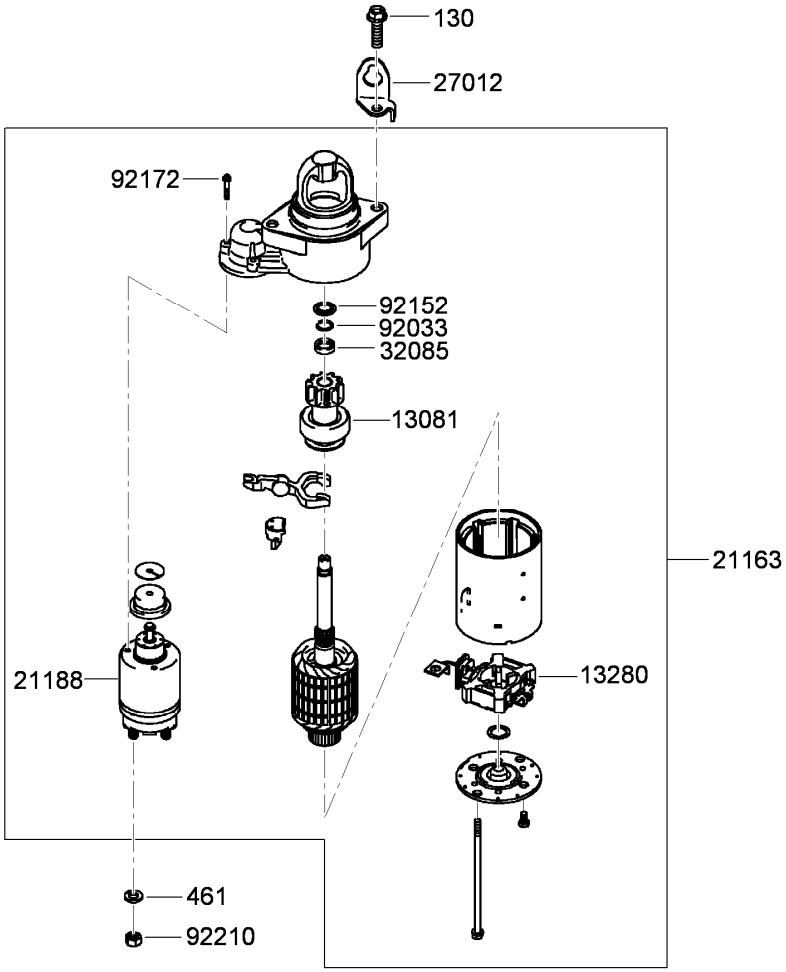

Starter Assembly
Kawasaki FX801V-AS04

Ref.	*Part Number*	*Qty.*	*Description*
130	130AA0830	2	Bolt-Flanged (8X30) ●
461	461DA0800	1	Washer-Spring (8Mm) ●
13081	13081-7001	1	Clutch ASM ●
13280	13280-7002	1	Holder ●
21163	21163-7021	1	Starter-Electric ●
21188	21188-7005	1	Solenoid ●
27012	27012-7005	1	Hook-Lift ●
32085	32085-7001	1	Stopper ●
92033	92033-7014	1	Ring-Snap ●
92152	92152-7013	1	Collar ●
92172	92172-7032	3	Screw ●
92210	92210-7027	1	Nut (M8) ●

● Obtain parts from www.kawpowerepc.com

56014

56033

56070

Label Set
Kawasaki FX801V-AS04

Ref.	*Part Number*	*Qty.*	*Description*
56014	56014-7004	1	Emblem ●
56033	56033-7001	1	Label-Manual ●
56070	56070-7001	1	Label-Warning ●

● Obtain parts from www.kawpowerepc.com

Attachments and Accessories

For 74925TE Z Master G3 Riding Mower, with 152cm TURBO FORCE Side Discharge Mower

Product Name	Model/Part
Blade-Mid Flow, 20.5 inch	105-7715-03
Blade-Lo Flow, 20.5 inch	105-7716-03
Blade-Hi Flow, 20.5 inch	105-7718-03
Blade-Recycler, 20.5 inch	105-7777-03
Blade-Atomic, 20.5 inch	105-8777-03
6 Pack Blade, 20.5 inch Hi-Flow	108-1114
6 Pack-Blade, 20.5 inch Atomic	108-1115
6 Pack Blade, 20.5 inch Mid-Flow	108-1123
6 Pack-Blade, 20.5 inch Lo Flow	108-1128
Hitch Kit	109-9487
6 Pack-Blade, 20.5 inch Recycler	110-0405
Hypr-Oil 500 (quart)	114-4713
Hypr-Oil 500 (gallon)	114-4714
Hypr-Oil 500-5 (5 gallon)	114-4715
Bimini Folding Shade Assembly	115-4510
Recycler Kit	115-7468
Light Kit	116-1154
Z Stand Kit	117-0350
Operator-Controlled Discharge Chute Kit	117-3600
Deluxe Suspension Seat Kit	117-6174
Trash Holder Kit	TC26

Notes:

Notes:

TORO®

Count on it.