Form No. 3362-528 Rev C

Striping Kit
for GrandStand® Mowers
Model No. 114–3521

Installation Instructions

Note: Determine the left and right sides of the machine from the normal operating position.

Installation

Loose Parts

Use the chart below to verify that all parts have been shipped.

Procedure	Description	Qty.	Use
1	No parts required	–	Prepare the mower.
2	Hinge plate Bolt, (3/8 x 1-1/4 inches) Large lock washer, (3/8 inch) Locknut, (3/8 inch) Washer	2 2 2 2 2	Install the hinge plates.
3	Carriage bolt (3/8 x 1 inch) Locknut, (3/8 inch)	4 6	Install the mounting brackets.
4	Spring Clevis pin Hairpin cotter pin	2 2 2	Install the roller assembly to striper bracket mounts.
5	No parts required	–	Connect the chains.

1

Preparing the Mower

No Parts Required

Procedure

1. Thoroughly clean mower deck. All debris must be removed to ensure the kit will fit properly.
2. Repair all bent or damaged areas and replace any missing parts.
3. Raise the platform and verify the latch is securely engaged to hold the platform up.

2

Installing the Hinge Plates

Parts needed for this procedure:

2	Hinge plate
2	Bolt, (3/8 x 1-1/4 inches)
2	Large lock washer, (3/8 inch)
2	Locknut, (3/8 inch)
2	Washer

Procedure

1. Install the hinge plate to the bottom of the mower near the rear wheels with 2 bolts (3/8 x 1-1/4 inches), large lock washer, (3/8 inch), washer and 2 locknuts (3/8 inch) (Figure 1).
2. Position the hinge plates so the rear tie downs are in the slot.

© 2009—The Toro® Company
8111 Lyndale Avenue South
Bloomington, MN 55420

Original Instructions (EN)
Printed in the USA.
All Rights Reserved

Note: The washer is a spacer placed inside the frame to center the bolt in the large frame hole.

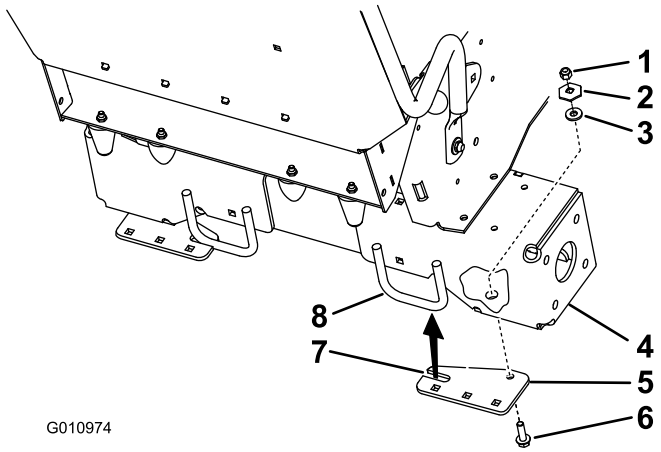

Figure 1

1. Locknut, (3/8 inch)
2. Large lock washer, (3/8 inch)
3. Washer
4. Right side of machine
5. Hinge plate
6. Bolt, (3/8 x 1-1/4 inches)
7. Slot in hinge plate
8. Rear tie down

3

Installing the Mounting Brackets

Parts needed for this procedure:

4	Carriage bolt (3/8 x 1 inch)
6	Locknut, (3/8 inch)

Procedure

1. Measure the width between the rear tie downs to determine if the machine has a narrow base (6 inches (152.4 mm)) or wide base (10 inches (254 mm)) (Figure 2).
2. Install the mounting brackets to the outer holes for narrow base mowers and the inner holes for wide base mowers (Figure 2).

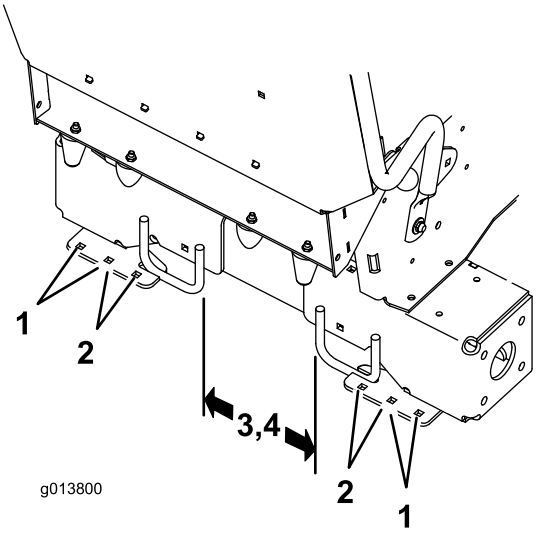

Figure 2

1. Use the outside holes for narrow base mowers
2. Use the inside holes for wide base mowers
3. 6 inches (152.4 mm) for narrow base mowers
4. 10 inches (254 mm) for wide base mowers

3. Install the mounting brackets to the hinge plates with 4 bolts (3/8 x 1 inch) and 4 locknuts (3/8 inch) (Figure 3).

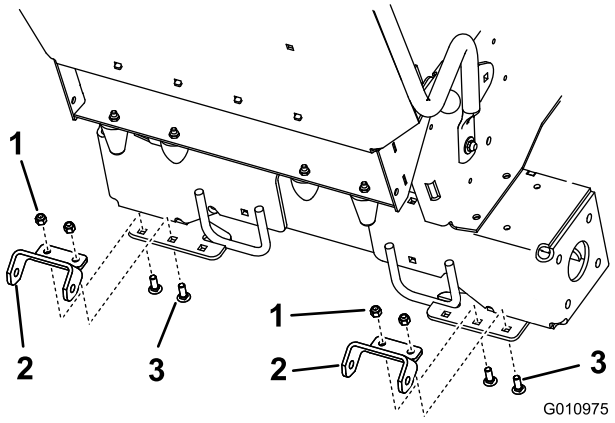

Figure 3

Shown with narrow base mower

1. Bolts (3/8 x 1 inch)
2. Mounting bracket
3. Locknuts (3/8 inch)

4

Installing the Roller Assembly to Striper Bracket Mounts

Parts needed for this procedure:

2	Spring
2	Clevis pin
2	Hairpin cotter pin

Procedure

1. Position the springs into the striper mounting brackets (Figure 4). Ensure the short outside finger on the spring is in the slot in the roller mount (Figure 6).

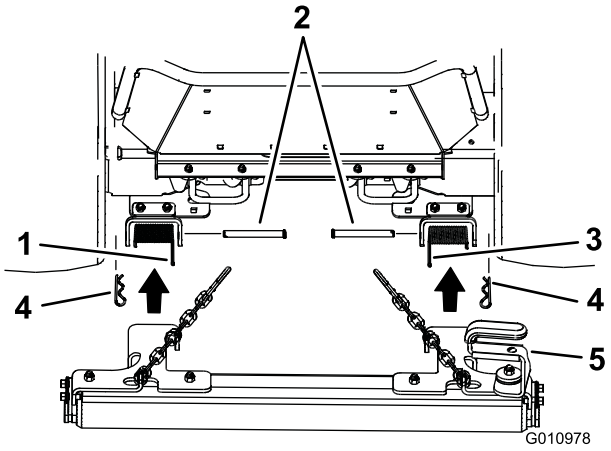

Figure 4

1. Left spring long finger
2. Clevis pin
3. Right spring long finger
4. Hairpin cotter pin
5. Roller assembly

2. Position the roller assembly into the striper mounting brackets (Figure 5).

3. Insert the clevis pin through the striper mounting bracket, roller mount and spring and secure it with a hairpin cotter pin (Figure 5).

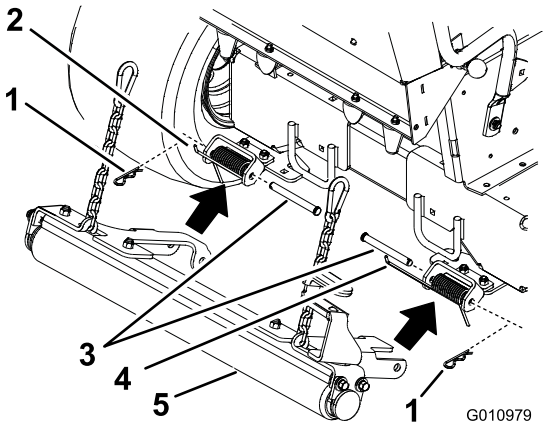

Figure 5

1. Hairpin cotter pin
2. Left spring long finger
3. Clevis pin
4. Right spring long finger
5. Roller assembly

4. Pull the inside spring finger up over the roller mount (Figure 6).

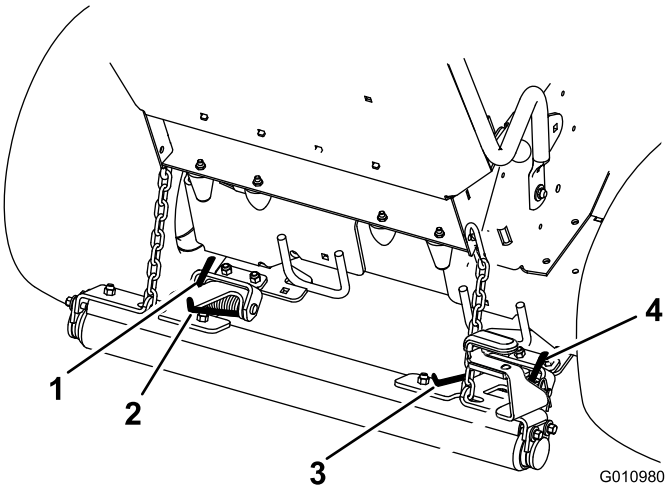

Figure 6

1. Left spring short finger
2. Left spring long finger
3. Right spring long finger
4. Right spring short finger

5

Connecting the Chains

No Parts Required

Procedure

1. Hold the operator platform while releasing the platform latch. Lower the platform completely down.
2. With the platform down, raise the roller up and rotate the lift handle over the platform (Figure 7).

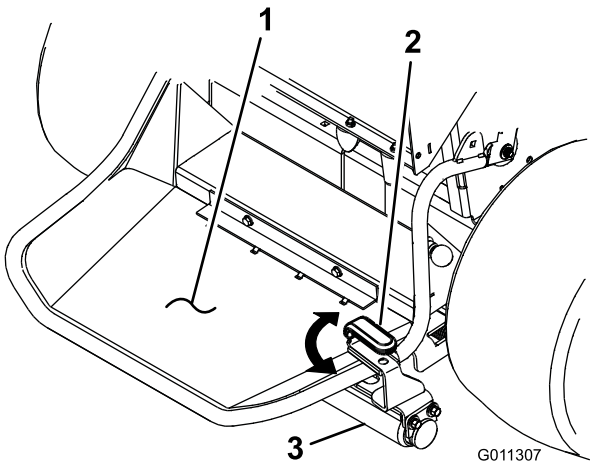

Figure 7

1. Platform down
2. Lift handle
3. Roller

3. Snap the chain end into the hole in the lower front side plate of the platform. Repeat for the opposite side (Figure 8).

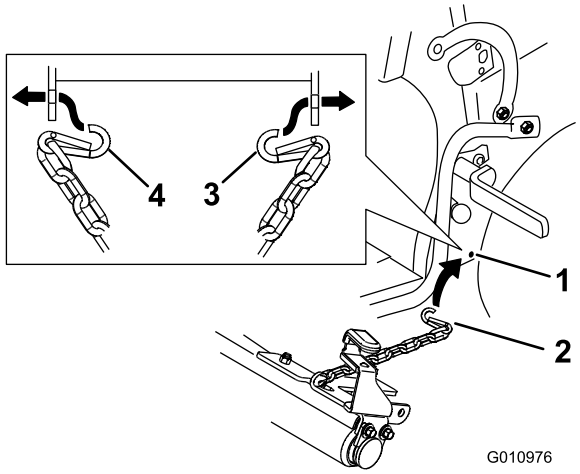

Figure 8

1. Hole in the lower front side plate of the platform
2. Snap ring
3. Right snap ring with hook towards the inside of the machine
4. Left snap ring with hook towards the inside of the machine

Operation

Raising the Roller

With the platform down, raise the roller up and rotate the lift handle over the platform (Figure 9).

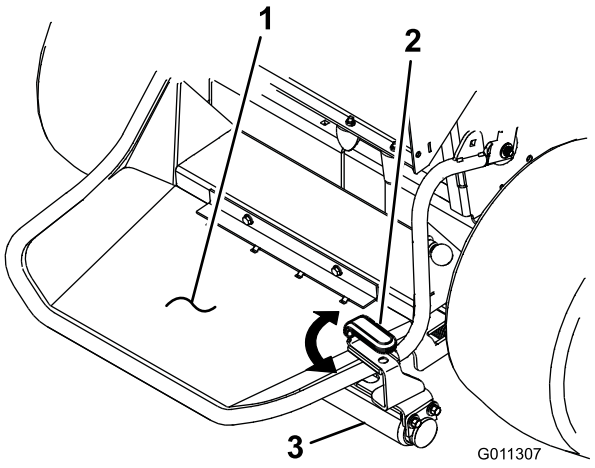

Figure 9

1. Platform down
2. Lift handle
3. Roller

Raising the Platform

1. Rotate the lift handle off the platform to lower the roller.
2. Raise the platform. The roller will also be raised by the chains.
3. Verify that the latch is securely engaged to hold the platform and the roller up.

Removing the Roller

1. Release the chain end from the platform.
2. Raise the platform up.
3. Release the tension on the springs by rotating the long spring fingers off of the roller mounts.
4. Remove the clevis pin and hairpin cotter pin.
5. Remove the roller from the machine.
6. Install the springs, clevis pins and the hairpin cotter pins onto the roller assembly for later use.

Operating Tips

Effective striping is influenced by grass condition and grass type

- Limp grass where wheel tracks are very visible is usually good for striping.
- Stiff grass where wheel tracks are less visible will usually produce poor striping.
- Cool season grass types found in northern areas are usually good for striping.
- Warm season grass types found in southern areas will usually produce less pronounced striping.
- Transition zone grasses found in the narrow belt region can produce good striping in some areas and some portions of the growing season, while producing poor striping in other areas or portions of the season.
- Some grass types produce better striping contrast when mowing short. Other grass types or moisture content of the grass can provide better contrast when mowing at a long/tall height of cut. Experiment with what works best in your situation.

Striping visibility is affected by the sun position

This is how the light is reflected on the grass.

- Mowing patterns which generally run east–west will have a greater contrast than north–south patterns.
- The striping pattern contrast is less visible around noon, and is more visible in mornings and afternoons.

Striping visibility is affected by your position

The grass which is bent towards you will appear darker, and grass which is bent away from you will appear lighter.

- Mowing patterns which generally run along a road will have greater contrast when viewed approaching or leaving the property. The contrast of striping will be less visible when looking across the mowing direction.
- If the property has a focal point, or a viewing location, it can be beneficial to mow in a pattern that is generally to and from the observation point.

Lawn condition affects striping visibility

- Large flat areas usually provide better striping contrast than on slopes or areas with a lot of trimming and edging.

- Mowing in morning dew can produce good striping contrast.
- Double cut mowing, and mowing a second pass at a 1/2 inch lower height of cut can produce good striping contrast.

Mowing mode can affect striping contrast

- Side dispersal of clippings can hide striping, reducing the contrast effect.
- Bagging can display heavy wheel tracks, reducing the effect of striping.
- Mulching will often display excellent contrast, enhancing the effect of striping.

The landscape can promote or hinder striping

- The mowing area size has an effect on the final appearance. Large areas can look better when mowed with a large mower. Small areas may not look right when cut with a large mower.
- Large areas with occasional trees or other obstructions will often look best when the mowing pattern appears to go through the obstruction. For example, it can look best for a pattern to match and continue on the far side of a small pond. A different cross cut pattern on the far side of a pond may not be visible.
- Some areas look best with long straight lines of striping mowing pattern, aligned with a property edge. Some areas look best with a diamond pattern, where neither straight line is aligned with the property edge. Properties with rolling hillsides or ponds can look best with a flowing curves striping pattern. A distinctive feature like a small pond can be highlighted and enhanced by a radial pattern or by a ring pattern.

Some lawns need to be *trained* to show a distinctive striping contrast

- On a new property during weeks 1 and 2, you may need to follow the exact same pattern and direction in the same wheel tracks. This will begin training the grass to bend in the desired direction.
- On week 3 use a cross–grain striping pattern.
- On weeks 4 and 5 follow with repeating the original pattern. After the primary striping pattern grain is established, you may alternate the pattern each week to establish a checkerboard or a plaid style of mowing pattern.
- Do not mow in the exact same pattern every week. This will cause compaction in wheel tracks, and may produce ruts or depressions along the wheel tracks.

Turning while using the striping kit

- Raise the roller when turning. Striping is generally not enhanced by end turns.
- Raising the roller will reduce confusing the pattern at the ends of the pattern.

Driving the machine to different cutting areas

- Raise the roller and the deck and drive along a previous cut path to transport from one area of the property to another section.
- A nice striping pattern can be ruined by driving across the pattern.

Follow all general mowing common practices

- It is usually best to first mow the perimeter to establish a boundary.
- When side discharging, the clippings should be directed away from walks, drives, flower beds, buildings and vehicles. If the discharge throws clippings a long distance, mow additional passes to avoid unwanted cleanup of clippings.
- Avoid excessive driving backwards. Driving back and forth, frequent forward and reverse maneuvers around an obstacle will compress the grass and disturb the professional appearance of a nice job.
- Avoid close trimming with the striping kit installed to reduce damage to landscaping and the roller.
- Follow all safe mowing practices as describe in the *Operator's Manual.* Do not let the striping pattern cause you to mow into a hazardous situation.

Notes:



Count on it.