Form No. 3366-400 Rev A

TORO®

Count on it.

Parts Catalog

TimeCutter® ZS 4200 Riding Mower

Model No. 74386—Serial No. 311000001 and Up

Ordering Replacement Parts

To order replacement parts, please supply the part number, the quantity, and the description of each part desired.

Understanding Reference Numbers

Each identified part in an illustration has a reference number. The reference number for a part also appears in the parts list, along with other information about the part.

This catalog uses two special reference number formats, one to indicate parts in a service assembly and another to indicate the quantity of a given part in an illustration.

Service Assembly Reference Numbers

Parts in service assemblies have reference numbers in the form a:b. The a represents the reference number of the entire service assembly and the b represents a sequential number unique to each part within the service assembly.

For example, a wheel assembly might be identified by reference number 6, the tire by 6:1, the valve by 6:2, and the wheel by 6:3. When you order the assembly identified by reference number 6, you receive all parts identified by reference numbers 6:1,6:2, and 6:3. However, you may also order any part individually. Reference numbers of this type appear in illustration and in parts lists.

Reference Numbers Indicating Quantity

In an illustration, if a reference number indicates more than one part, the reference number has the form nX y. The n represents the quantity of the part, the X is the multiplication symbol, and the y represents the reference number.

For example, in an illustration, the reference number 2X 37 means that two of the parts identified by reference number 37 are indicated.

List of Abbreviations

AR: as required

ASM: assembly

BBC: blade brake control

BHTF: button head thread forming

CARR: carriage

CCW: counter clockwise

CW: clockwise

DEG: degrees

DPA: Dual Point Adjustment

ECM: electronic control module

EXT: external

FH: flat head

GA: gauge

HD: heavy-duty

HF: hex flange

HH: hex head

HHF: hex head flange

HHFTF: hex head flange thread forming

HJ: hex jam

HLH: hex lag head

HOC: height-of-cut

HSBH: hex socket button head

HSFH: hex socket flat head

HSH: hex socket head

HWH: hex washer head

HWHTF: hex washer head thread forming

HYD: hydraulic

LH: left hand

LP: Liquid Propane

NI: nylon insert

NPTF: national pipe thread fine

PFH: phillips flat head

PPH: phillips pan head

PPHTF: phillips pan head thread forming

PRH: phillips round head

PTH: phillips truss head

PTO: power-take-off

RH: right hand

ROPS: roll-over protection system

RRB: rear roller brush

SFH: slotted fillister head

SHH: slotted hex head

SHWH: slotted hex washer head

SPH: slotted pan head

SQH: square head

SRH: slotted round head

STD: standard

TAP: self tapping

TTH: torx truss head

© 2011—The Toro® Company
8111 Lyndale Avenue South
Bloomington, MN 55420

Contact us at www.Toro.com.
Printed in the USA.
All Rights Reserved

Contents

Frame, Front Axle and Caster Wheel Assembly 4
Caster Wheel Assembly No. 110-6785 5
Caster Wheel Assembly No. 120-5515 6
Deck Lift Assembly 7
Motion Control Assembly 8
Seat Assembly 10
Hydro Transaxle Drive and Rear Wheel Assembly 11
Right Hand Hydro Transaxle Assembly No. 119-3331 12
Left Hand Hydro Transaxle Assembly No. 119-3330 14
Wheel and Tire Assembly No. 119-3465 16
Wheel and Tire Assembly No. 120-5523 17
Engine, Muffler and Clutch Assembly 18
Body Styling and Fuel Pod Assembly 19
Fuel Delivery Assembly 20
Battery and Electrical Assembly 21
42 Inch Deck Assembly 22
42 Inch Deck Assembly No. 119-8840 23
42 Inch Deck Baffle Assembly 24
42 Inch Deck, Belt and Blade Assembly 25
Attachments and Accessories 26

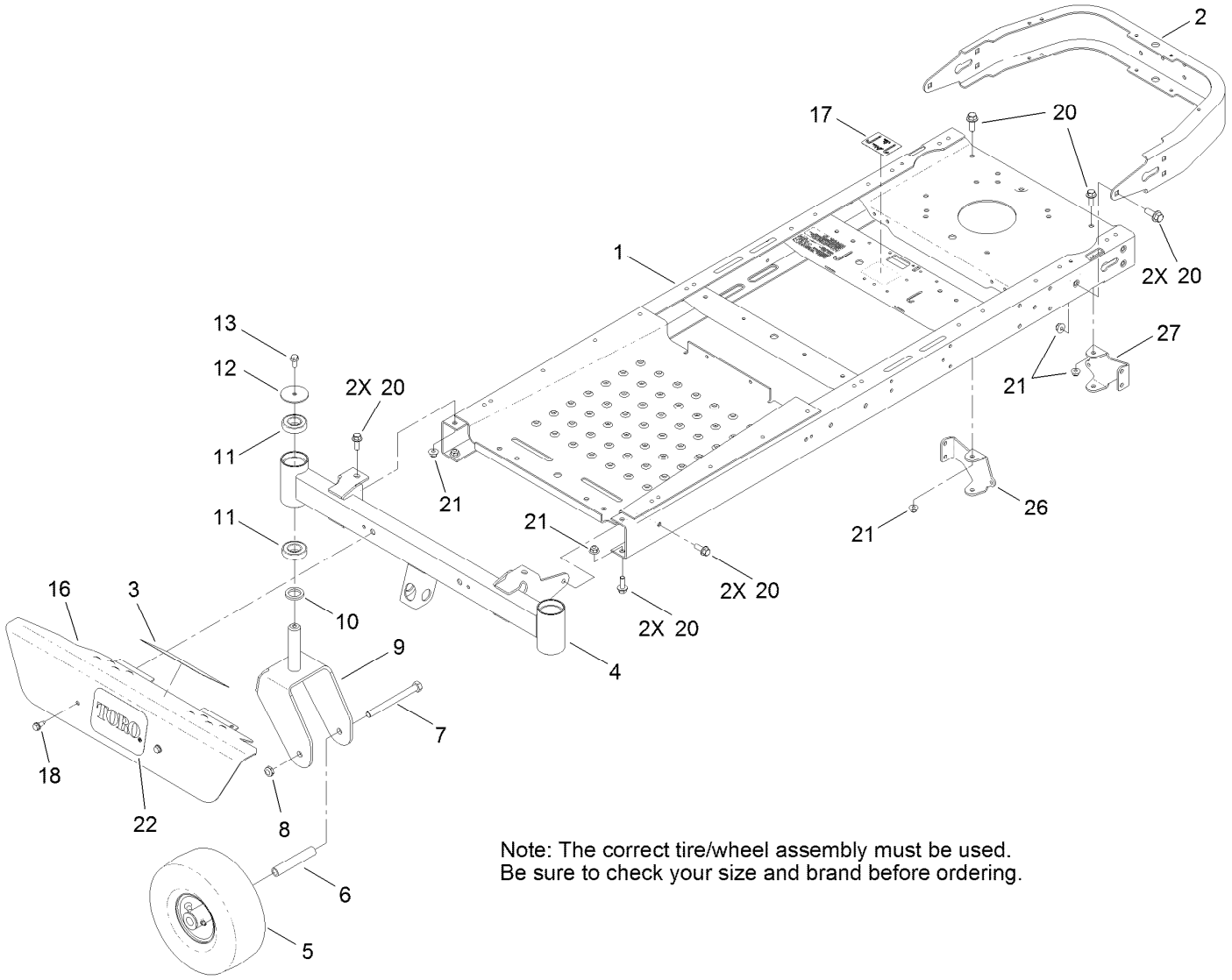

Note: The correct tire/wheel assembly must be used.
Be sure to check your size and brand before ordering.

Frame, Front Axle and Caster Wheel Assembly

Ref.	Part Number	Qty.	Description
1	117-7260-01	1	Frame ASM
2	110-1920-01	1	Bumper-Rear
3	120-2239	1	Decal-Danger
4	120-5516-01	1	Axle-Front
5	110-6785	2	Caster Wheel ASM (Kenda)
5	120-5515	2	Caster Wheel ASM (Cst)
6	104-3667	2	Spanner-Wheel
7	325-22	2	Screw-HH
8	3296-45	2	Nut-Lock, NI
9	120-2266-01	2	Fork-Caster
10	117-7394	2	Washer-Thrust
11	109-3678	4	Bearing-Ball
12	119-8915	2	Washer
13	3234-47	2	Screw-HHF
16	117-7332-03	1	Footrest
17	120-5465	1	Decal-Transport
18	32144-70	2	Screw-HWHTF
20	3234-42	14	Screw-HHF
21	104-8301	14	Nut-Flange, NI
22	105-8278	1	Decal
26	117-7459-01	1	Mount-Hydro, Rear (RH)
27	117-7460-01	1	Mount-Hydro, Rear (LH)

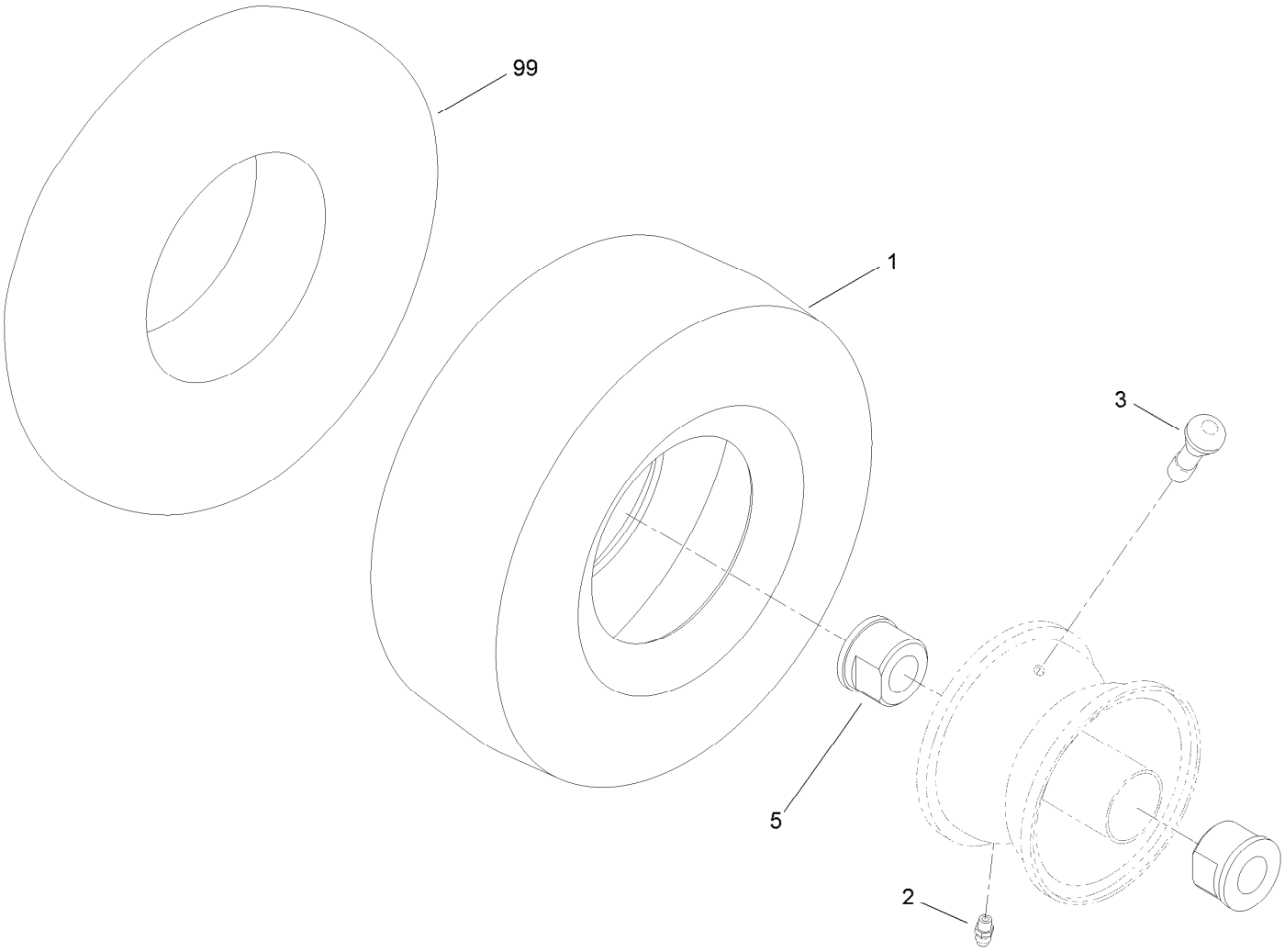

Caster Wheel Assembly No. 110-6785

Ref.	*Part Number*	*Qty.*	*Description*
1	110-6791	1	Tire-Smooth (Kenda)
2	302-5	1	Fitting-Grease
3	232-27	1	Stem-Valve
5	114-1640	2	Bushing-Flange
99	93-4244	1	Tube-Inner (W/Valve)

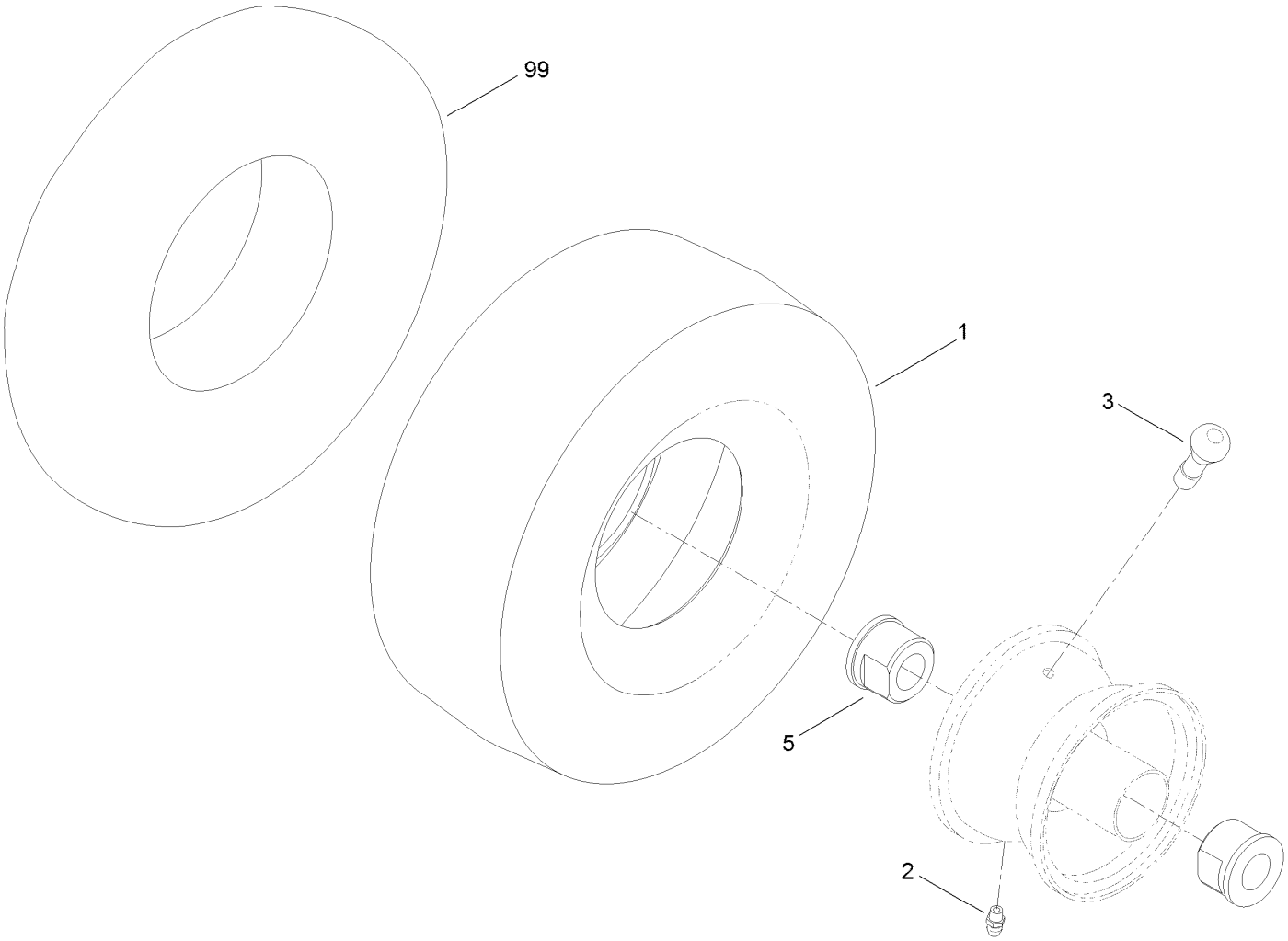

Caster Wheel Assembly No. 120-5515

Ref.	*Part Number*	*Qty.*	*Description*
1	120-5514	1	Tire-Smooth (Cst)
2	302-5	1	Fitting-Grease
3	232-27	1	Stem-Valve
5	114-1640	2	Bushing-Flange
99	93-4244	1	Tube-Inner (W/Valve)

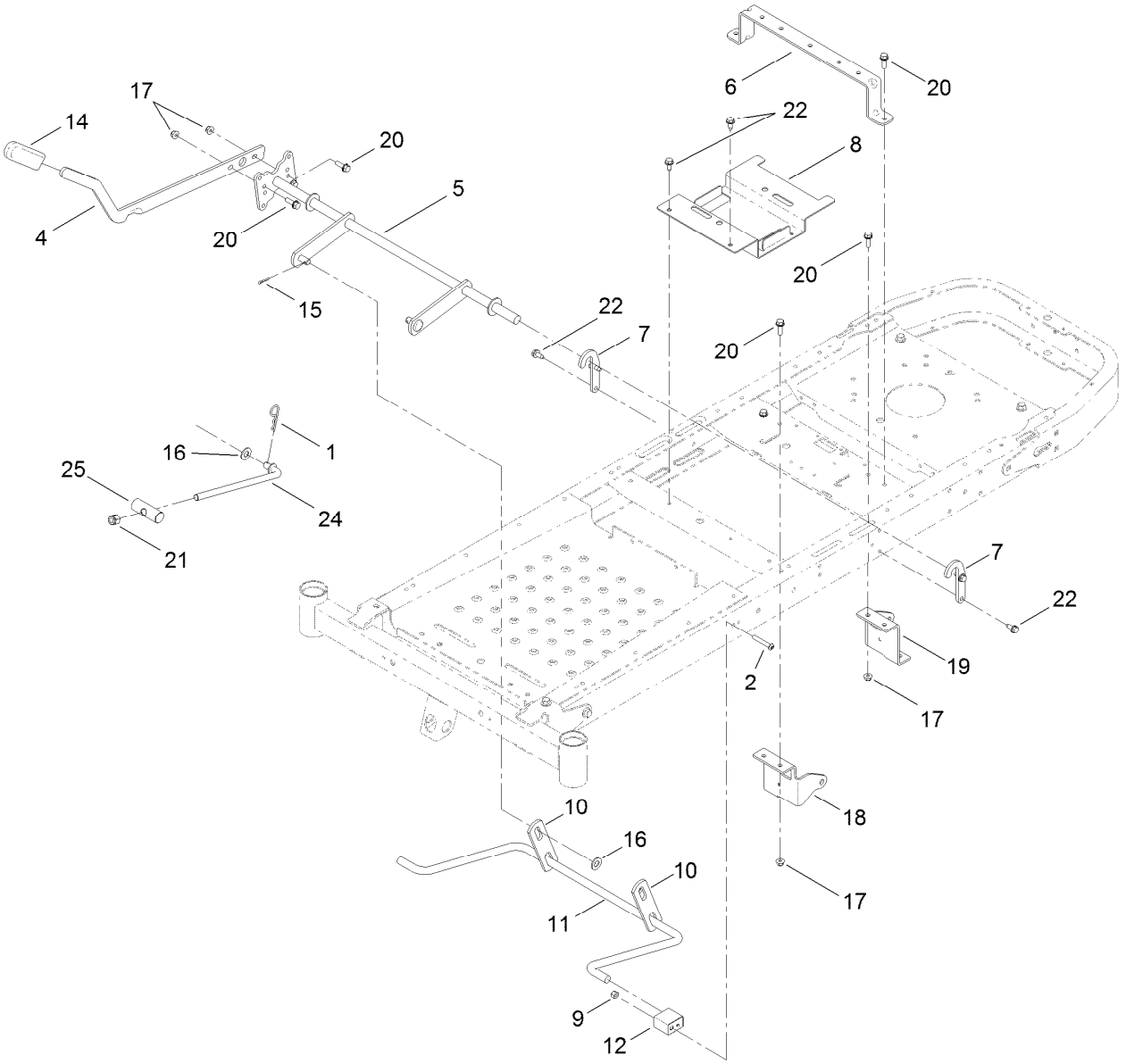

Deck Lift Assembly

Ref.	Part Number	Qty.	Description
1	1-806005	1	Pin-Hair
2	120-5499	2	Screw-HSBH
4	119-3427-03	1	Lever-Lift
5	117-7346-03	1	Deck Lift ASM
6	119-3435-03	1	Brace-Seat, Rear
7	119-8875	2	Bracket-Lift
8	119-3406-03	1	Bracket-Battery
9	3296-29	2	Nut-Lock, NI
10	108-7840	2	Link-Lift
11	108-7839	1	Arm-Lift, Rear
12	108-7845	2	Block-Pivot

Ref.	Part Number	Qty.	Description
14	1-633268	1	Grip-Lever
15	3272-10	2	Pin-Cotter
16	3256-26	3	Washer-Flat
17	104-8300	6	Nut-Flange, NI
18	119-8861-01	1	Mount-Hydro, Front (RH)
19	119-8862-01	1	Mount-Hydro, Front (LH)
20	3234-29	6	Screw-HHF
21	3296-19	1	Nut-Hex
22	32144-70	6	Screw-HWHTF
24	104-8047	1	Rod-Trunion
25	119-8810	1	Pin-Pivot

Motion Control Assembly

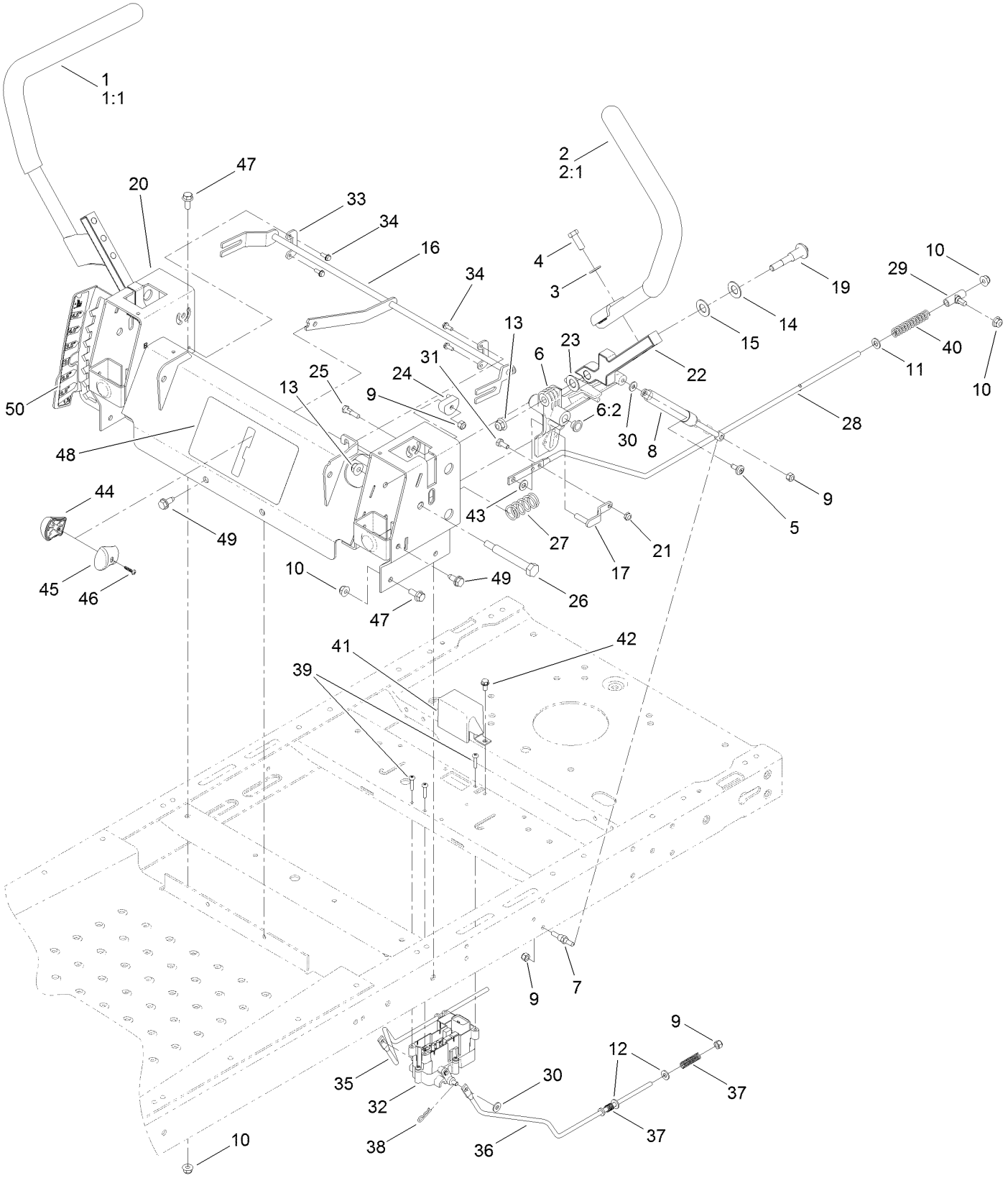

Motion Control Assembly (continued)

Ref.	Part Number	Qty.	Description
1	119-3486	1	RH Handle ASM
1:1	108-6187	1	Grip
2	119-3485	1	LH Handle ASM
2:1	108-6187	1	Grip
3	3256-24	4	Washer-Flat
4	323-6	4	Screw-HH
5	112-4004	2	Screw-Shoulder
6	119-3470	2	Actuator Arm ASM
6:2	256-156	2	Bushing-Flange
7	110-6810	2	Stud-Damper
8	103-2913	2	Damper-Control, Motion
9	3296-42	8	Nut-Lock, NI
10	104-8300	10	Nut-Flange, NI
11	3256-23	2	Washer-Flat
12	3256-22	4	Washer-Flat
13	104-8301	4	Nut-Flange, NI
14	119-8925	2	Washer-Belleville
15	117-1240	2	Washer
16	119-8832	1	Control-Speed
17	119-3303	2	Pin-Rod, Hydro
19	117-1198	2	Bolt-Pivot
20	119-3386-03	1	Box-Control
21	3296-56	2	Nut-Lock, NI
22	115-5098-05	2	Lever-Control
23	120-2273	2	Washer-Nylon
24	115-9604	2	Eccentric
25	119-3301	2	Bolt-Pivot, Eccentric
26	115-5099	2	Bolt-Pivot
27	119-8876	2	Spring-Return
28	117-5388	2	Rod-Hydro
29	119-8842	2	Mount-Rod, Hydro
30	119-8952	4	Washer
31	321-3	2	Screw-HH
32	115-9660	1	Brake Control Module ASM
33	117-5385	2	Retainer
34	32144-1	4	Screw-Taptite
35	119-8816	1	Rod-Brake, RH
36	119-8817	1	Rod-Brake, LH
37	117-1169	4	Spring-Compression
38	3290-307	2	Pin-Hair
39	32144-36	4	Screw-PPH
40	1-603807	2	Spring-Return, Neutral
41	119-8859	1	Cover-Brake
42	32144-4	1	Screw-HWH
43	93-6079	2	Spacer-Nylon
44	119-8935	1	RH Knob ASM
45	119-8936	1	LH Knob ASM
46	94-4496	1	Screw-PPH
47	3234-47	6	Screw-HHF
48	120-5468	1	Decal-Speed Control
49	32144-70	4	Screw-HWHTF
50	120-5469	1	Decal-HOC

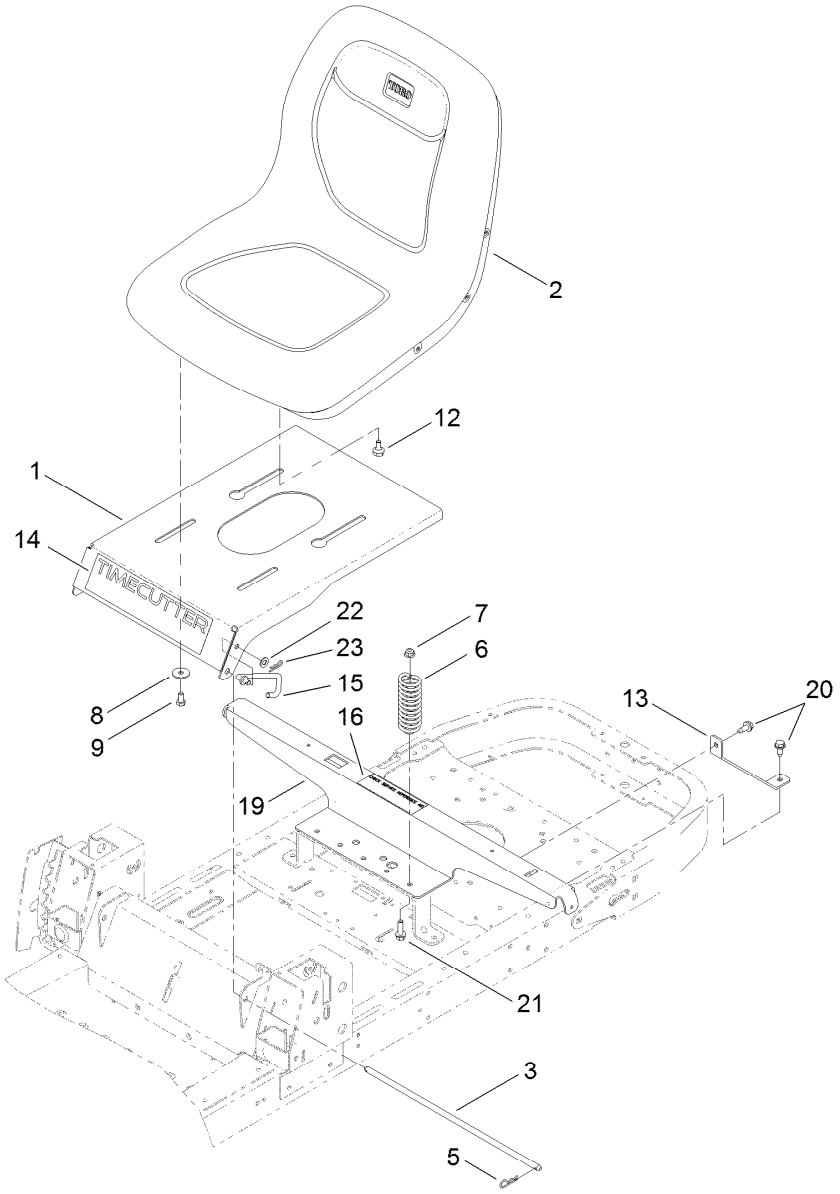

Seat Assembly

Ref.	Part Number	Qty.	Description
1	119-3391-01	1	Pan-Seat
2	119-8829	1	Seat-18 Inch
3	119-3433	1	Rod-Pivot, Narrow
5	3290-250	2	Pin-Hair
6	92-7054	3	Spring-Compression
7	104-8300	3	Nut-Flange, NI
8	5-4460	2	Washer-Pivot
9	322-2	2	Screw-HH
12	37-8771	2	Bolt-Shoulder
13	119-3431-03	2	Support-Tank, Rear
14	120-5451	1	Decal-Timecutter
15	119-8972	1	Stop-Seat
16	106-8717	1	Decal-Service
19	119-3436-03	1	Support-Pod
20	32144-70	4	Screw-HWHTF
21	3234-29	3	Screw-HHF
22	3256-23	1	Washer-Flat
23	3290-307	1	Pin-Hair

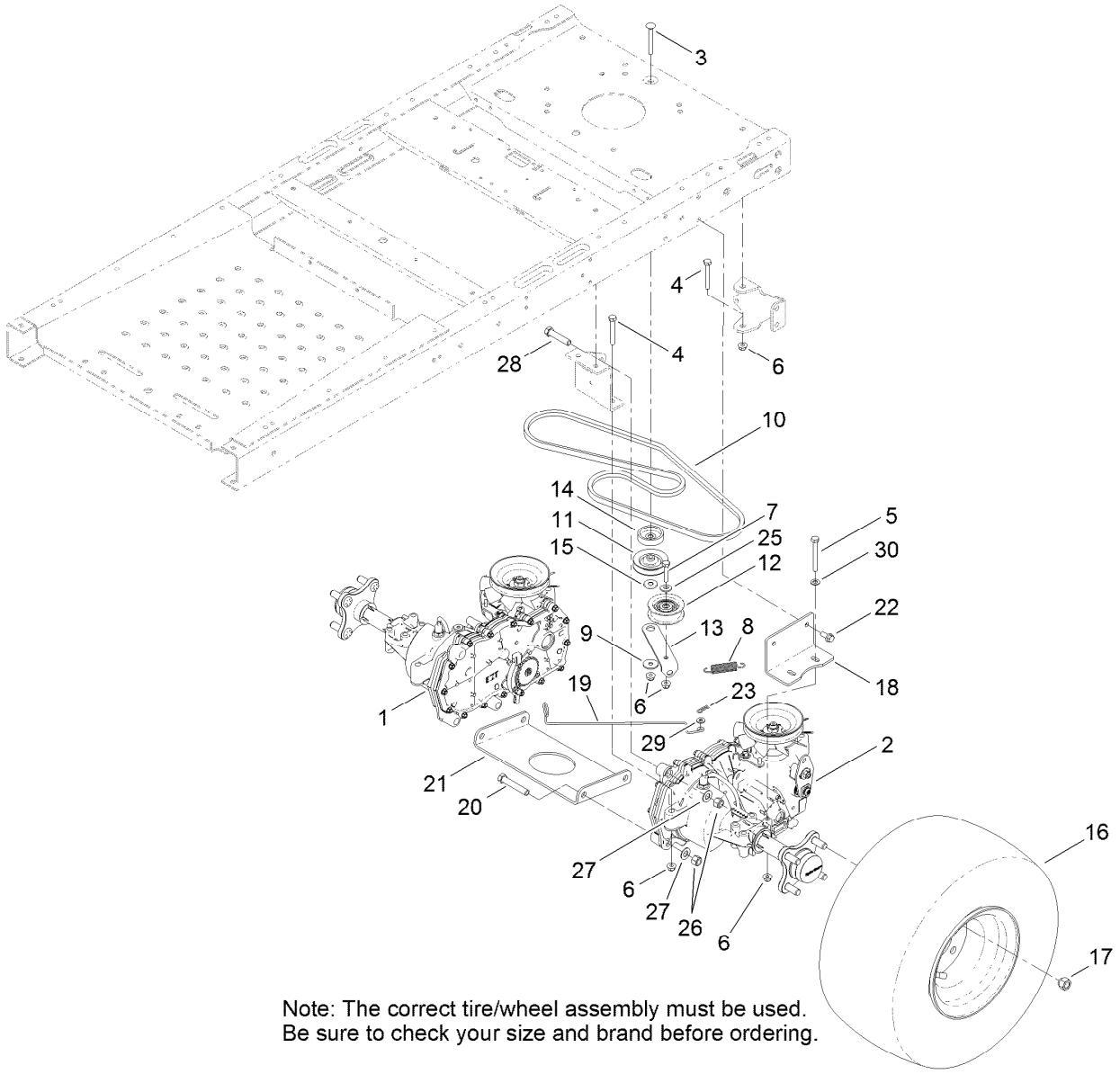

Note: The correct tire/wheel assembly must be used.
Be sure to check your size and brand before ordering.

Hydro Transaxle Drive and Rear Wheel Assembly

Ref.	*Part Number*	*Qty.*	*Description*
1	119-3331	1	Transaxle-Hydro, RH
2	119-3330	1	Transaxle-Hydro, LH
3	3230-8	1	Screw-CARR
4	322-11	4	Screw-HH
5	322-13	4	Screw-HH
6	104-8300	14	Nut-Flange, NI
7	322-7	1	Screw-HH
8	104-6415	1	Spring-Return, Pedal
9	5-4460	1	Washer-Pivot
10	119-3309	1	V-Belt
11	119-8822	1	Pulley-Idler
12	106-2176	1	Pulley-Idler
13	119-3326	1	Arm-Idler
14	119-3353	1	Spacer
15	119-3327	1	Spacer-Arm, Idler
16	119-3465	2	Wheel And Tire ASM (Kenda)

Ref.	*Part Number*	*Qty.*	*Description*
16	120-5523	2	Wheel And Tire ASM (Premium)
17	242-50	8	Nut-Lug
18	117-7264-03	2	Mount-Hydro
19	119-3464	2	Rod-Bypass
20	324-10	4	Screw-HH
21	119-3339-03	1	Cross Plate-Hydro
22	3234-29	4	Screw-HHF
23	3290-307	2	Pin-Hair
25	3256-3	1	Washer-Flat
26	3296-48	6	Nut-Lock, NI
27	3256-25	6	Washer-Flat
28	324-8	2	Screw-HH
29	3256-22	2	Washer-Flat
30	3256-23	4	Washer-Flat

Right Hand Hydro Transaxle Assembly No. 119-3331

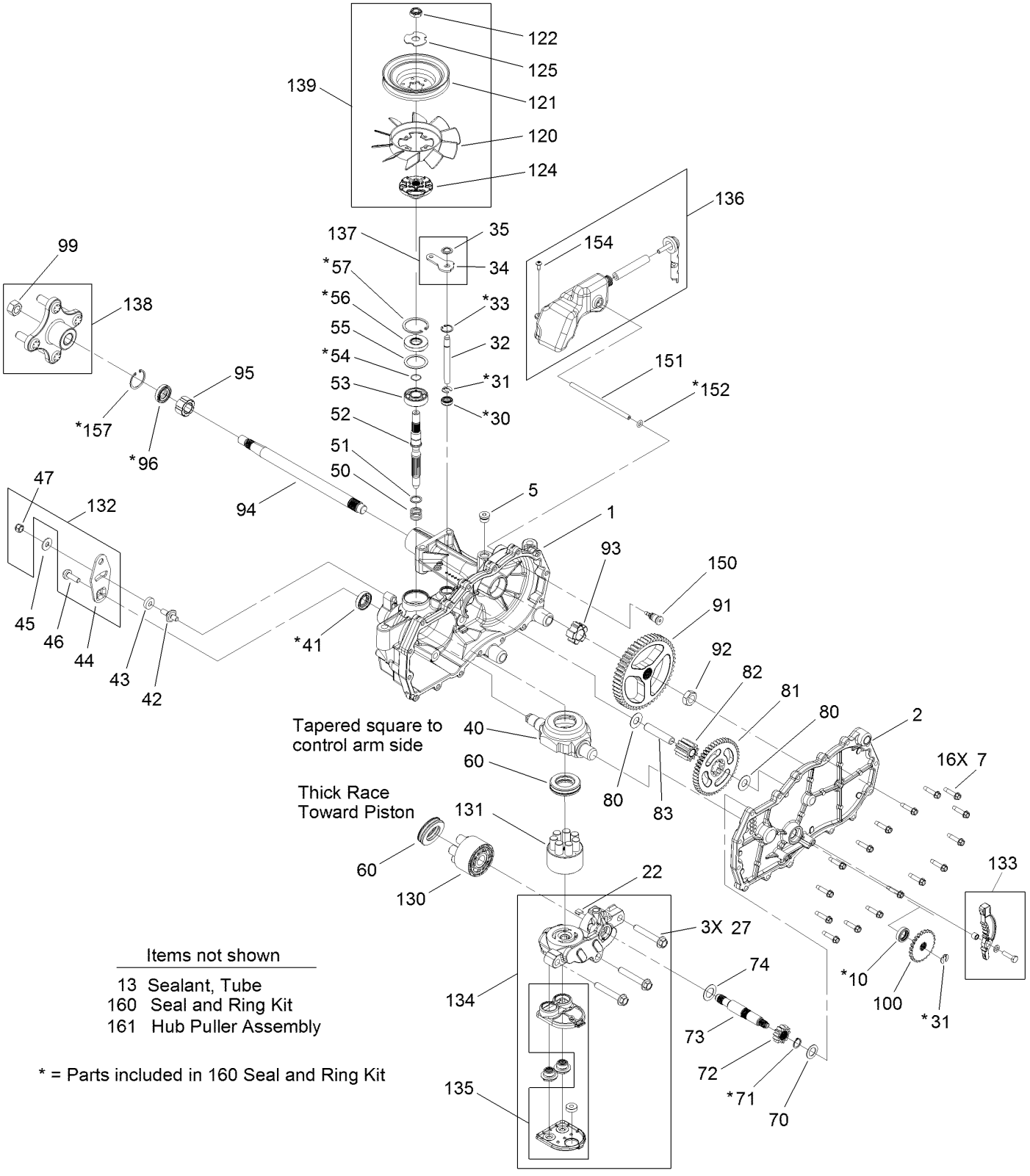

Items not shown

13 Sealant, Tube
160 Seal and Ring Kit
161 Hub Puller Assembly

* = Parts included in 160 Seal and Ring Kit

Right Hand Hydro Transaxle Assembly No. 119-3331 (continued)

Ref.	Part Number	Qty.	Description
1	120-5531	1	Main Housing ASM
2	120-5533	1	Housing Side Kit
5	104-2189	1	Plug-Thread, Straight
7	117-5359	16	Screw-Hfhcs
10	120-5535	1	Seal-Lip
13	104-2147	1	Sealant ●
22	114-1680	1	Plate-Bypass
27	120-5536	3	Bolt-Hex Flange
30	106-8676	1	Seal-Lip
31	106-8677	1	Ring-Retaining, EXT
32	106-8678	2	Rod-Bypass
33	106-8679	1	Ring-Retaining, Int
34	107-2490	1	Arm-Bypass
35	106-8681	1	Ring-Retaining, EXT
40	104-5304	1	Swashplate-Trunnion
41	104-5313	1	Seal-Lip
42	104-2116	1	Stud
43	112-9853	1	Puck-Friction
44	106-8747	1	Arm-Control
45	114-8491	1	Washer
46	107-2488	1	Screw
47	105-1872	1	Nut
50	120-5537	1	Spring-Compression
51	120-5538	1	Washer
52	104-5306	1	Shaft-Input
53	104-5311	1	Bearing-Ball
54	104-5307	1	Ring-Retaining
55	104-5308	1	Spacer
56	104-5310	1	Seal-Lip
57	104-5309	1	Ring-Retaining
60	94-6922	1	Bearing-Thrust
70	104-5339	1	Washer-Flat
71	104-5340	1	Ring-Retaining
72	104-5316	1	Gear-Pinnion, 13T
73	106-8683	1	Shaft-Motor
74	104-5360	1	Washer-Shaft, Motor
80	119-5541	2	Washer
81	104-5317	1	Gear
82	104-5318	1	Gear-Jackshaft, 10T
83	104-5329	1	Pin-Jackshaft
91	120-5539	1	Gear-Bull
92	104-2142	1	Nut-HJ
93	115-8314	1	Bushing-Inboard
94	120-5540	1	Shaft-Axle
95	120-5541	1	Bearing-Sleeve
96	120-5542	1	Seal-Lip
99	120-5543	1	Nut-Hex Lock
100	106-8694	1	Disc-Brake, Cog
120	120-5544	1	Fan-6 Inch
121	120-5545	1	Pulley
122	105-1875	1	Nut-Lock
124	120-5546	1	Hub
125	107-9122	1	Washer-Slotted
130	103-2666	1	Cylinder Block Kit
131	110-8561	1	Pump Block ASM
132	117-5362	1	Arm Control Kit
133	106-8688	1	Brake Arm Kit
134	112-9862	1	Center Section Filter Kit
135	114-1634	1	Filter Kit
136	120-5547	1	Expansion Tank Kit
137	107-2489	1	Bypass Arm Kit
138	120-7101	1	Hub Kit
139	105-1928	1	Fan Pulley Kit
150	104-5349	1	Fitting-Sae
151	115-8302	1	Hose
152	104-5361	1	O-Ring
154	120-7100	1	Bolt-Self Tapping
157	120-7102	1	Ring-Retaining
160	120-7103	1	Seal And Ring Kit ●
161	114-8467	1	Hub-Puller, 4 Bolt ●

● Not illustrated

Left Hand Hydro Transaxle Assembly No. 119-3330

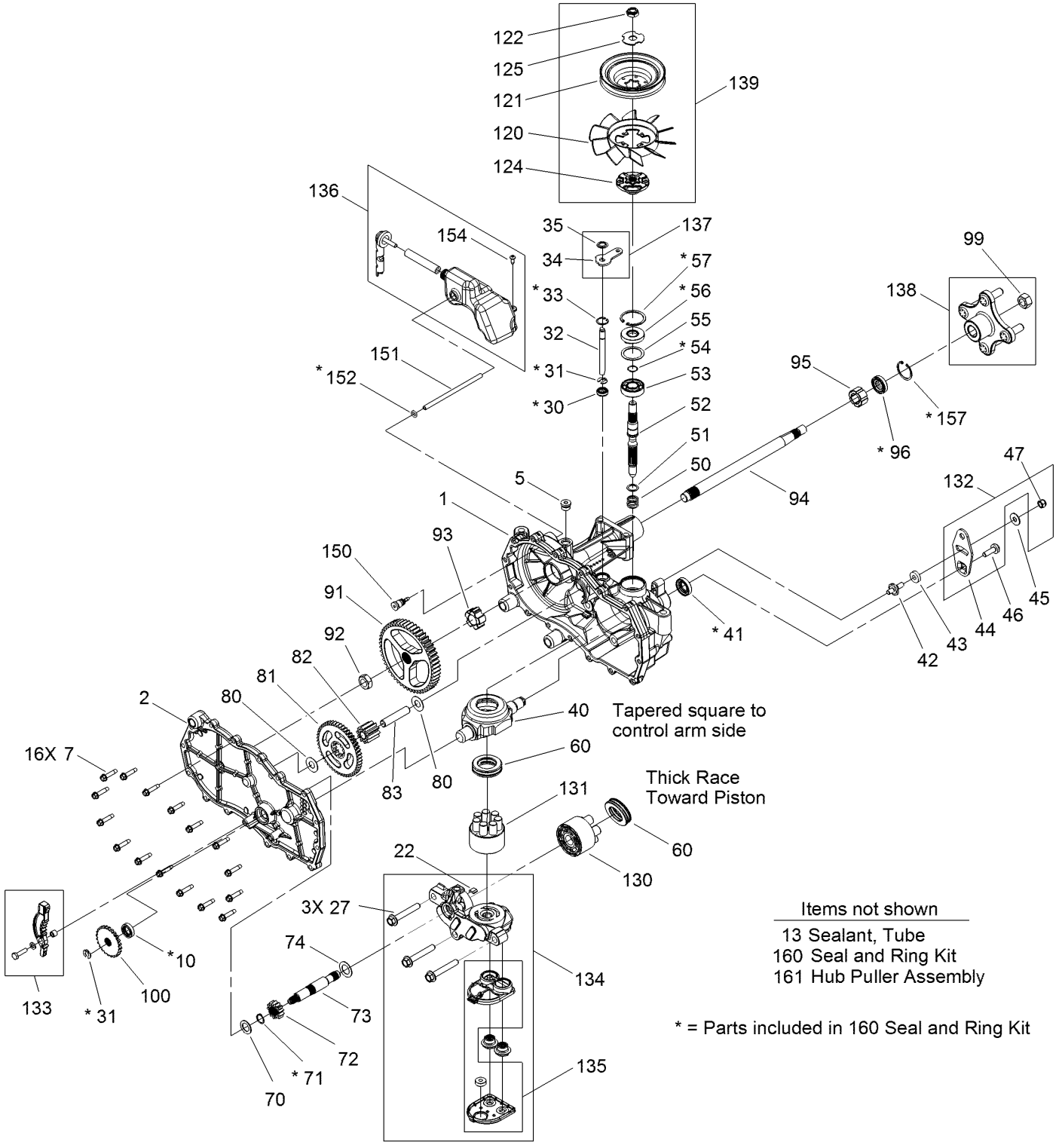

Items not shown

13 Sealant, Tube
160 Seal and Ring Kit
161 Hub Puller Assembly

* = Parts included in 160 Seal and Ring Kit

Left Hand Hydro Transaxle Assembly No. 119-3330 (continued)

Ref.	Part Number	Qty.	Description
1	120-5532	1	RH Main Housing ASM
2	120-5534	1	RH Housing Side Kit
5	104-2189	1	Plug-Thread, Straight
7	117-5359	16	Screw-Hfhcs
10	120-5535	1	Seal-Lip
13	104-2147	1	Sealant ●
22	114-1680	1	Plate-Bypass
27	120-5536	3	Bolt-Hex Flange
30	106-8676	1	Seal-Lip
31	106-8677	1	Ring-Retaining, EXT
32	106-8678	2	Rod-Bypass
33	106-8679	1	Ring-Retaining, Int
34	107-2490	1	Arm-Bypass
35	106-8681	1	Ring-Retaining, EXT
40	104-5304	1	Swashplate-Trunnion
41	104-5313	1	Seal-Lip
42	104-2116	1	Stud
43	112-9853	1	Puck-Friction
44	106-8747	1	Arm-Control
45	114-8491	1	Washer
46	107-2488	1	Screw
47	105-1872	1	Nut
50	120-5537	1	Spring-Compression
51	120-5538	1	Washer
52	104-5306	1	Shaft-Input
53	104-5311	1	Bearing-Ball
54	104-5307	1	Ring-Retaining
55	104-5308	1	Spacer
56	104-5310	1	Seal-Lip
57	104-5309	1	Ring-Retaining
60	94-6922	1	Bearing-Thrust
70	104-5339	1	Washer-Flat
71	104-5340	1	Ring-Retaining
72	104-5316	1	Gear-Pinnion, 13T
73	106-8683	1	Shaft-Motor
74	104-5360	1	Washer-Shaft, Motor
80	119-5541	2	Washer
81	104-5317	1	Gear
82	104-5318	1	Gear-Jackshaft, 10T
83	104-5329	1	Pin-Jackshaft
91	120-5539	1	Gear-Bull
92	104-2142	1	Nut-HJ
93	115-8314	1	Bushing-Inboard
94	120-5540	1	Shaft-Axle
95	120-5541	1	Bearing-Sleeve
96	120-5542	1	Seal-Lip
99	120-5543	1	Nut-Hex Lock
100	106-8694	1	Disc-Brake, Cog
120	120-5544	1	Fan-6 Inch
121	120-5545	1	Pulley
122	105-1875	1	Nut-Lock
124	120-5546	1	Hub
125	107-9122	1	Washer-Slotted
130	103-2666	1	Cylinder Block Kit
131	110-8561	1	Pump Block ASM
132	117-5362	1	Arm Control Kit
133	106-8688	1	Brake Arm Kit
134	112-9861	1	Center Section Filter Kit
135	114-1634	1	Filter Kit
136	120-5548	1	Expansion Tank Kit
137	107-2489	1	Bypass Arm Kit
138	120-7101	1	Hub Kit
139	105-1928	1	Fan Pulley Kit
150	104-5349	1	Fitting-Sae
151	115-8302	1	Hose
152	104-5361	1	O-Ring
154	120-7100	1	Bolt-Self Tapping
157	120-7102	1	Ring-Retaining
160	120-7103	1	Seal And Ring Kit ●
161	114-8467	1	Hub-Puller, 4 Bolt ●

● Not illustrated

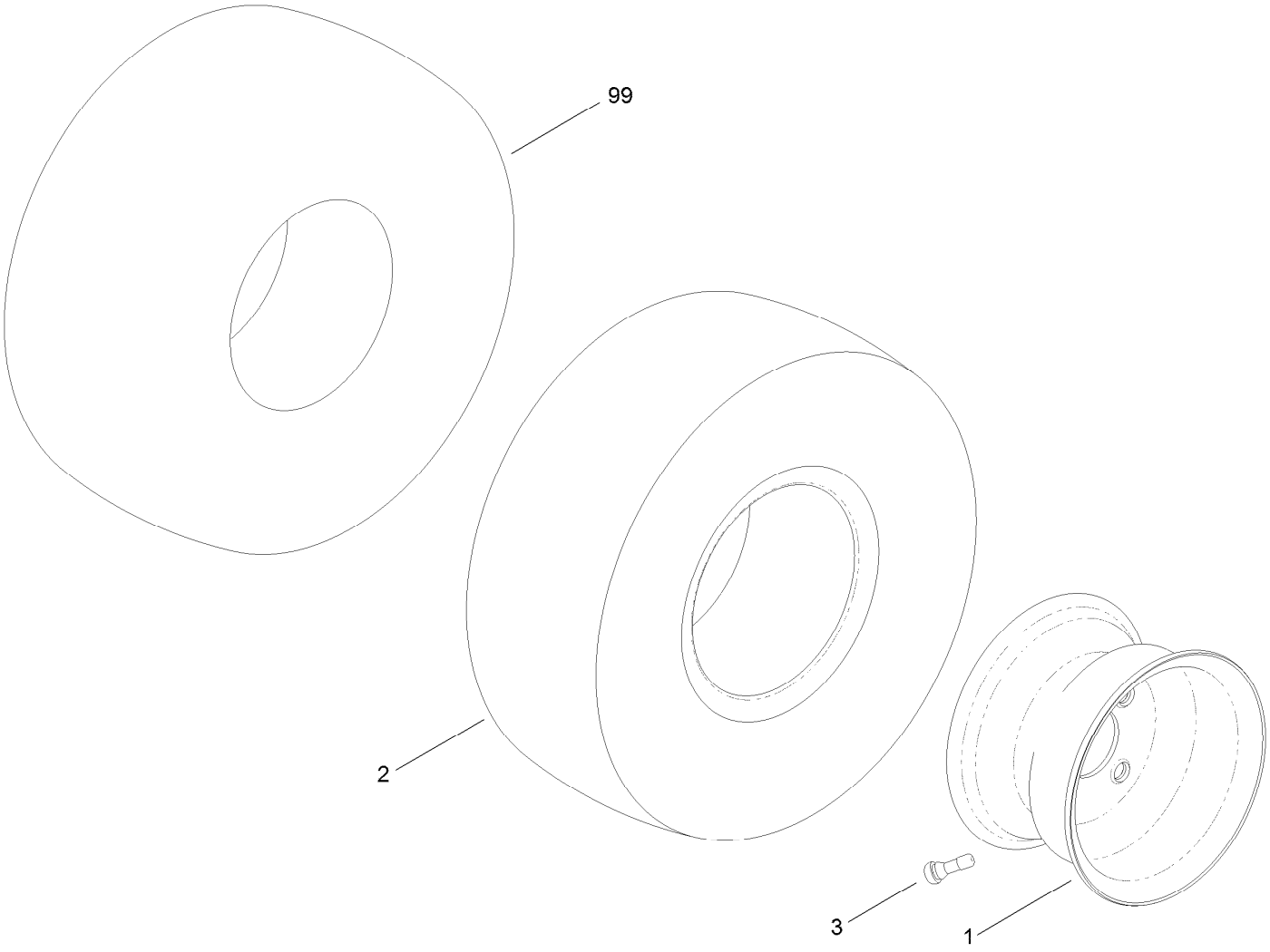

Wheel and Tire Assembly No. 119-3465

Ref.	*Part Number*	*Qty.*	*Description*
1	107-2475	1	Wheel
2	110-6885	1	Tire (Kenda)
3	232-27	1	Stem-Valve
99	107-2491	1	Tube-Tire

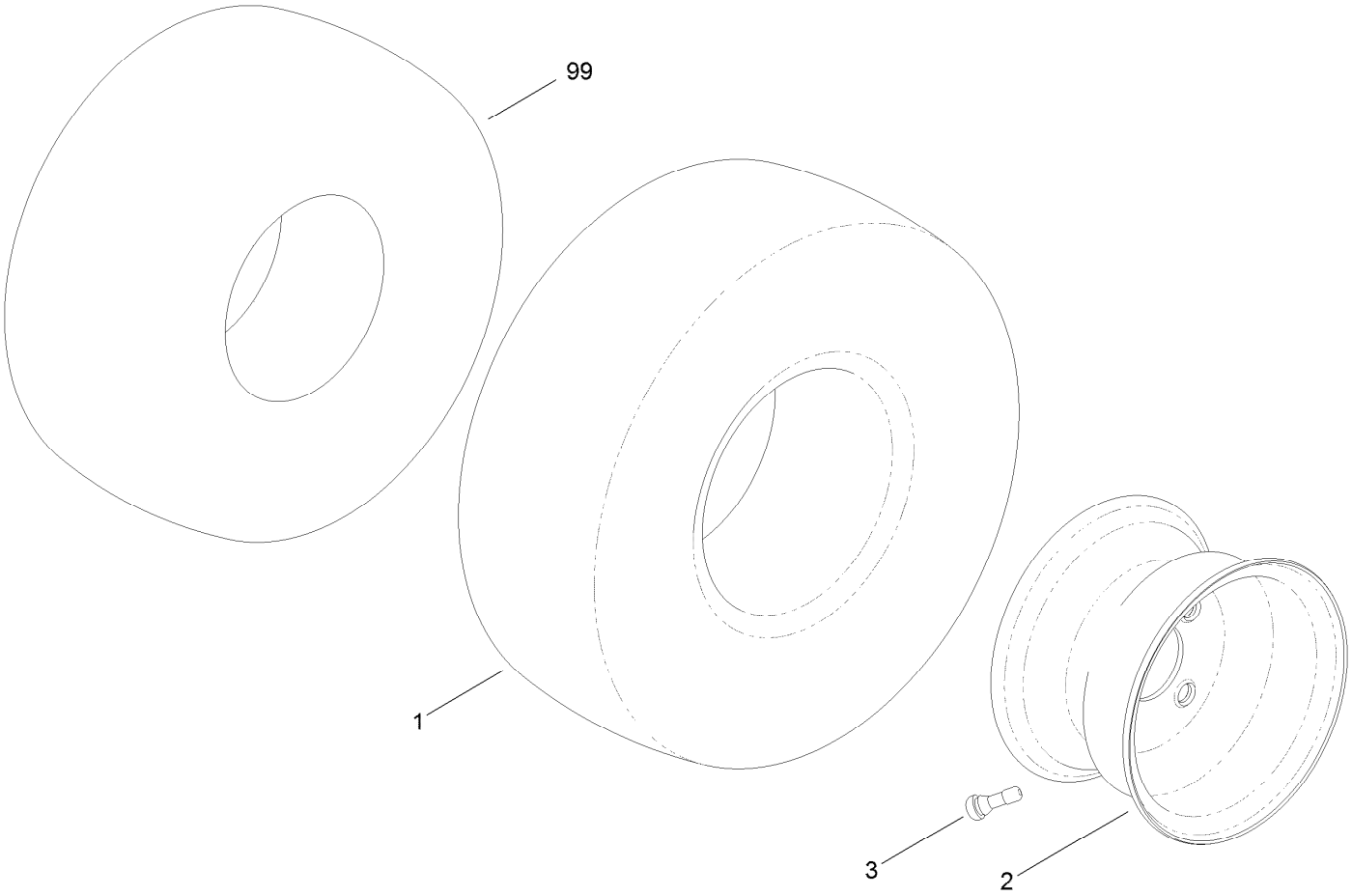

Wheel and Tire Assembly No. 120-5523

Ref.	*Part Number*	*Qty.*	*Description*
1	119-8907	1	Tire (Premium)
2	107-2475	1	Wheel
3	232-27	1	Stem-Valve
99	107-2491	1	Tube-Tire

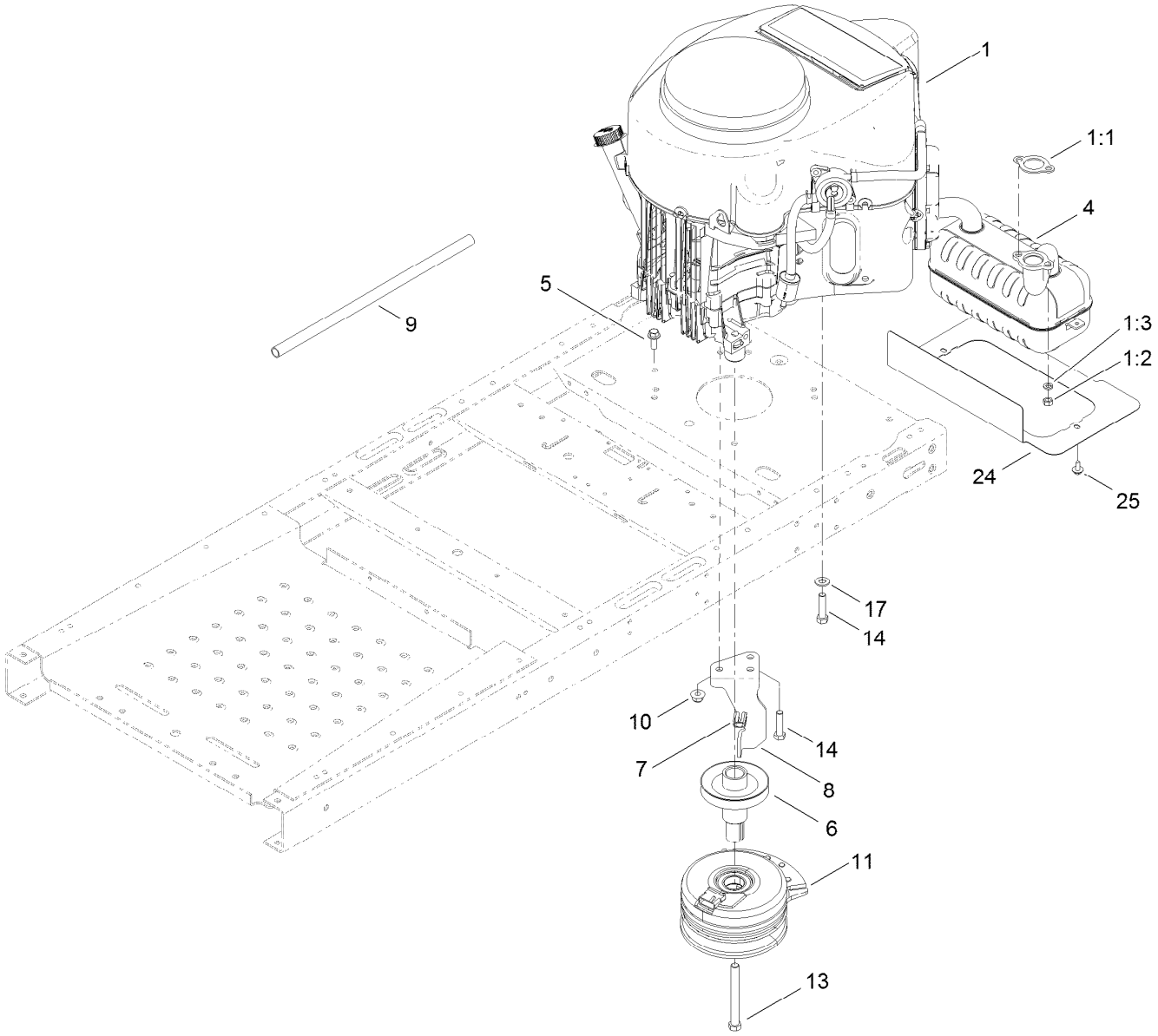

Engine, Muffler and Clutch Assembly

Ref.	Part Number	Qty.	Description
1		1	Engine-Kawasaki, Fr600V ●■
1:1	1-653313	2	Gasket-Exhaust
1:2	114-3549	4	Nut
1:3	114-3550	4	Washer-Lock, Spring
4	116-2450	1	Muffler-Kawasaki
5	3234-42	1	Screw-HHF
6	119-3318	1	Pulley-Engine
7	120-2217	1	Isolator-Clutch
8	119-8884	1	Stop-Clutch
9	106-7022	1	Tube-Drain, Oil
10	104-8301	1	Nut-Flange, NI
11	117-7468	1	Clutch-Electric
13	3212-16	1	Screw-HH
14	323-50	4	Bolt-HH
17	3256-24	3	Washer-Flat
24	119-8976-03	1	Shield-Heat
25	46-8560	2	Screw-HHFTF

● Not serviced separately

■ Obtain parts from www.kawpowerepc.com

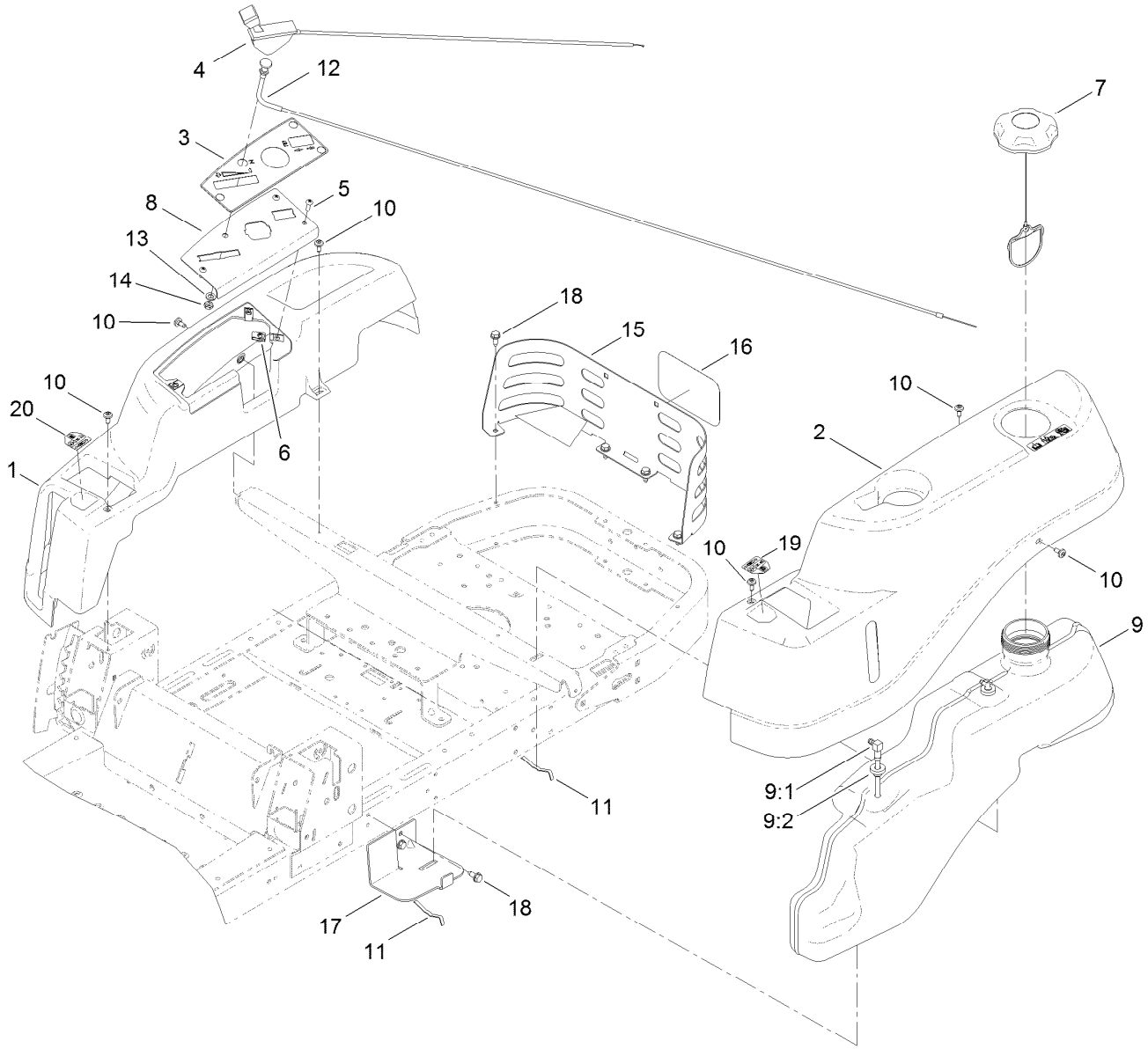

Body Styling and Fuel Pod Assembly

Ref.	Part Number	Qty.	Description
1	119-3335	1	Pod-RH
2	119-3334	1	Pod-LH
3	119-8873	1	Decal-Panel, Control
4	112-9752	1	Cable-Throttle
5	3258-166	3	Screw-PRH
6	107069	3	Clip
7	120-5461	1	Cap-Fuel, Ratcheting
8	119-3378-03	1	Plate-Control
9	119-3324	1	Fuel Tank ASM
9:1	115-2564	1	Tube-Drop
9:2	46-6560	2	Bushing

Ref.	Part Number	Qty.	Description
10	112-4004	6	Screw-Shoulder
11	609830	2	Spring
12	112-9753	1	Cable-Choke
13	3253-21	1	Washer-Lock
14	3220-3	1	Nut-HJ
15	119-8855-03	1	Guard-Rear
16	105-8278	1	Decal
17	119-3476-03	1	Support-Tank, Front
18	32144-70	6	Screw-HWHTF
19	119-8814	1	Decal-Control Lever, LH
20	119-8815	1	Decal-Control Lever, RH

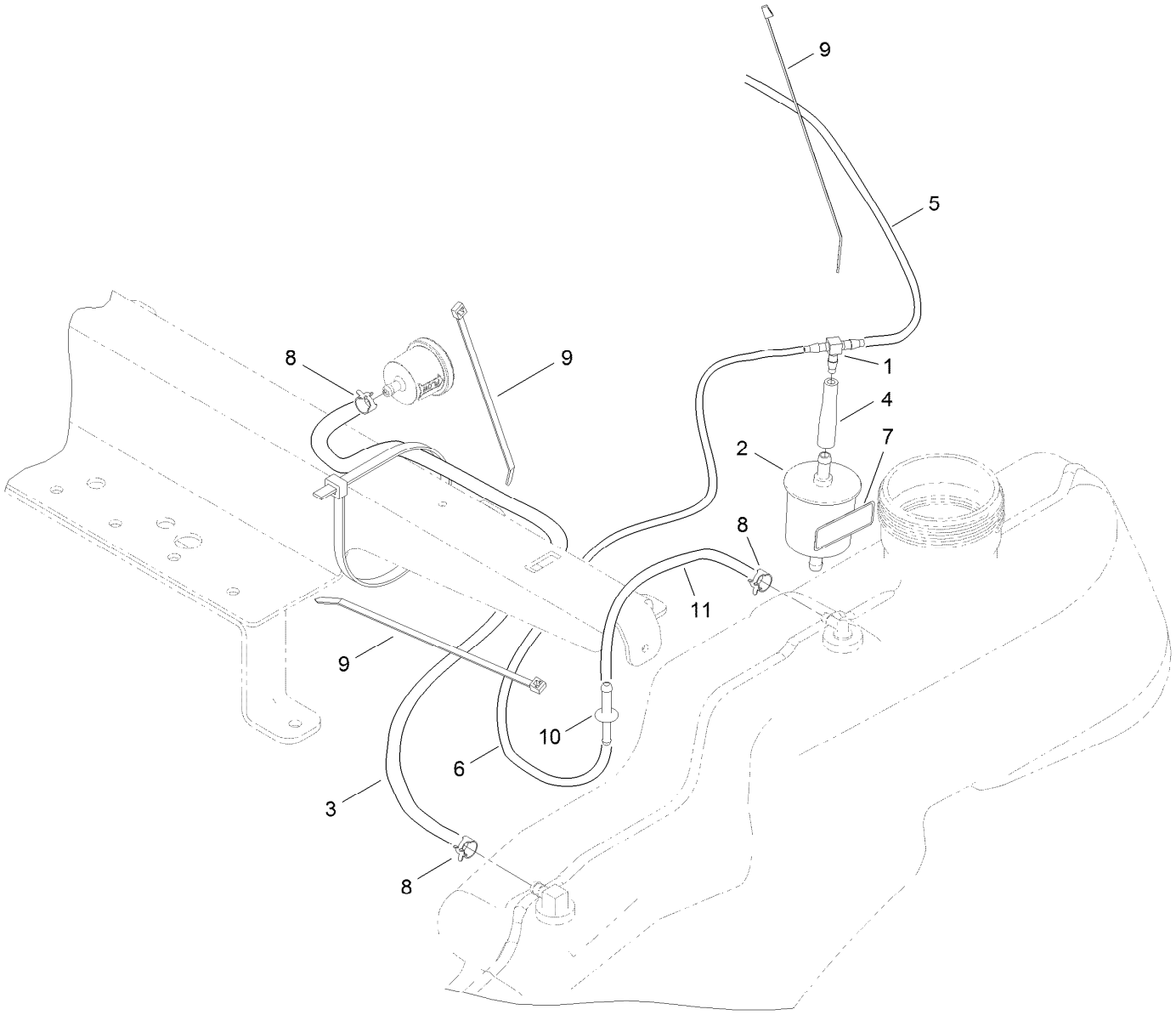

Fuel Delivery Assembly

Ref.	*Part Number*	*Qty.*	*Description*
1	120-2234	1	Fitting-Tee
2	120-2235	1	Filter-Air
3	110-5701	1	Hose-Fuel
4	120-2272	1	Hose-Fuel, Molded
5	119-8150	1	Hose-Fuel
6	119-8150	1	Hose-Fuel
7	116-4769	1	Decal-Filter, Emissions
8	2412-98	3	Clamp
9	614249	3	Strap-Tie
10	117-5399	1	Adaptor-Orifice
11	110-1876	1	Hose-Fuel

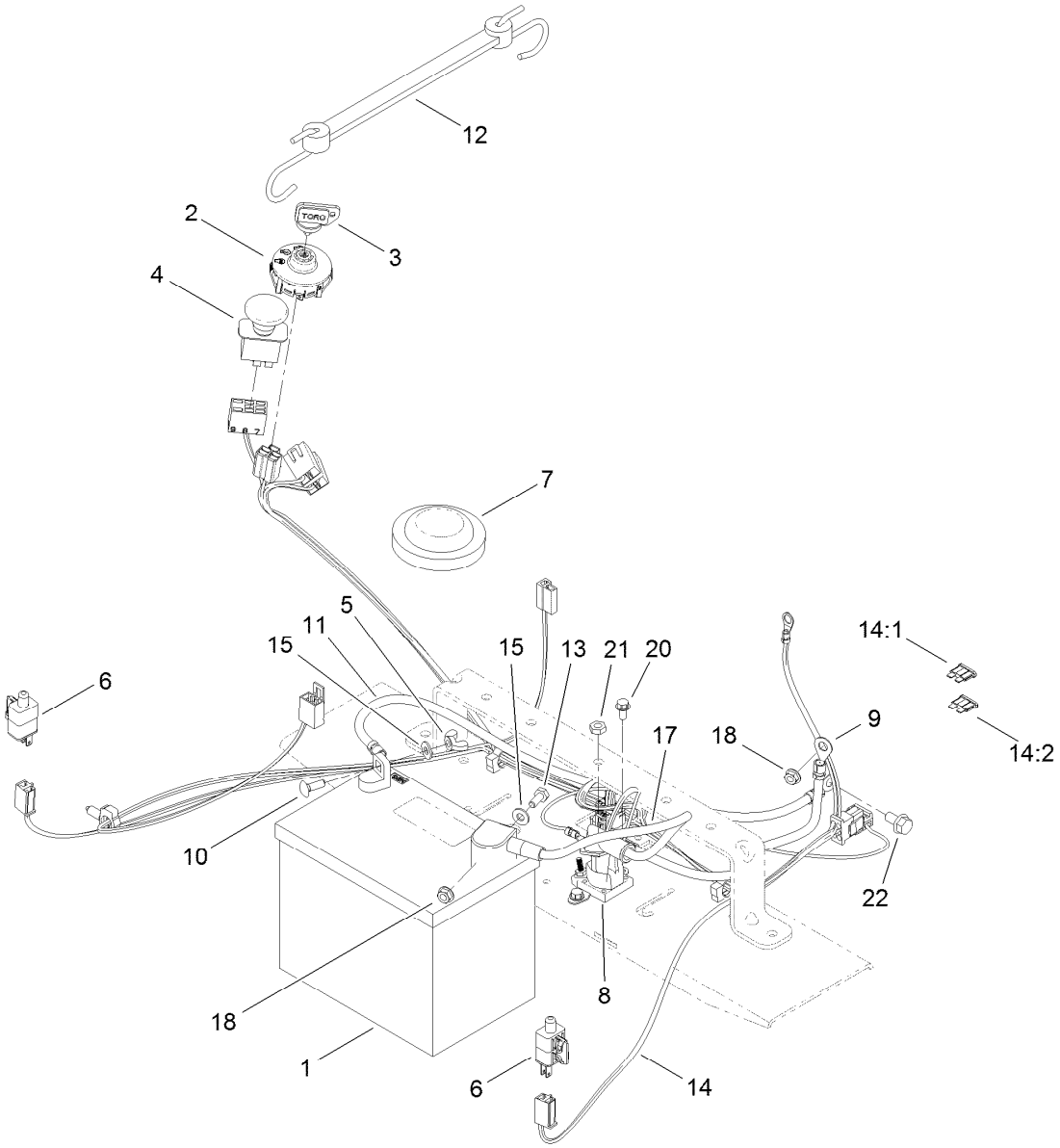

Battery and Electrical Assembly

Ref.	Part Number	Qty.	Description
1	104-2493	1	Battery
2	117-2221	1	Switch-Ignition
3	63-8360	1	Key-Ignition
4	93-9998	1	Switch-PTO
5	32103-22	1	Nut-Wing
6	110-6765	2	Switch-Single Pole No
7	100-3524	1	Switch-Seat
8	117-1197	1	Solenoid
9	119-8898	1	Cable-Battery, Red
10	3229-1	1	Screw-CARR
11	119-8899	1	Cable-Battery, Black

Ref.	Part Number	Qty.	Description
12	104-2466	1	Holddown-Battery
13	321-3	1	Screw-HH
14	119-3343	1	Harness-Wire
14:1	109103	1	Fuse-Blade, 30 Amp
14:2	109102	1	Fuse-Blade, 25 Amp
15	3256-22	2	Washer-Flat
17	119-8897	1	Cable-Battery, Red
18	32128-33	2	Nut-HF
20	32144-4	2	Screw-HWH
21	3220-2	2	Nut-Jam
22	33104-016	1	Screw-HHF

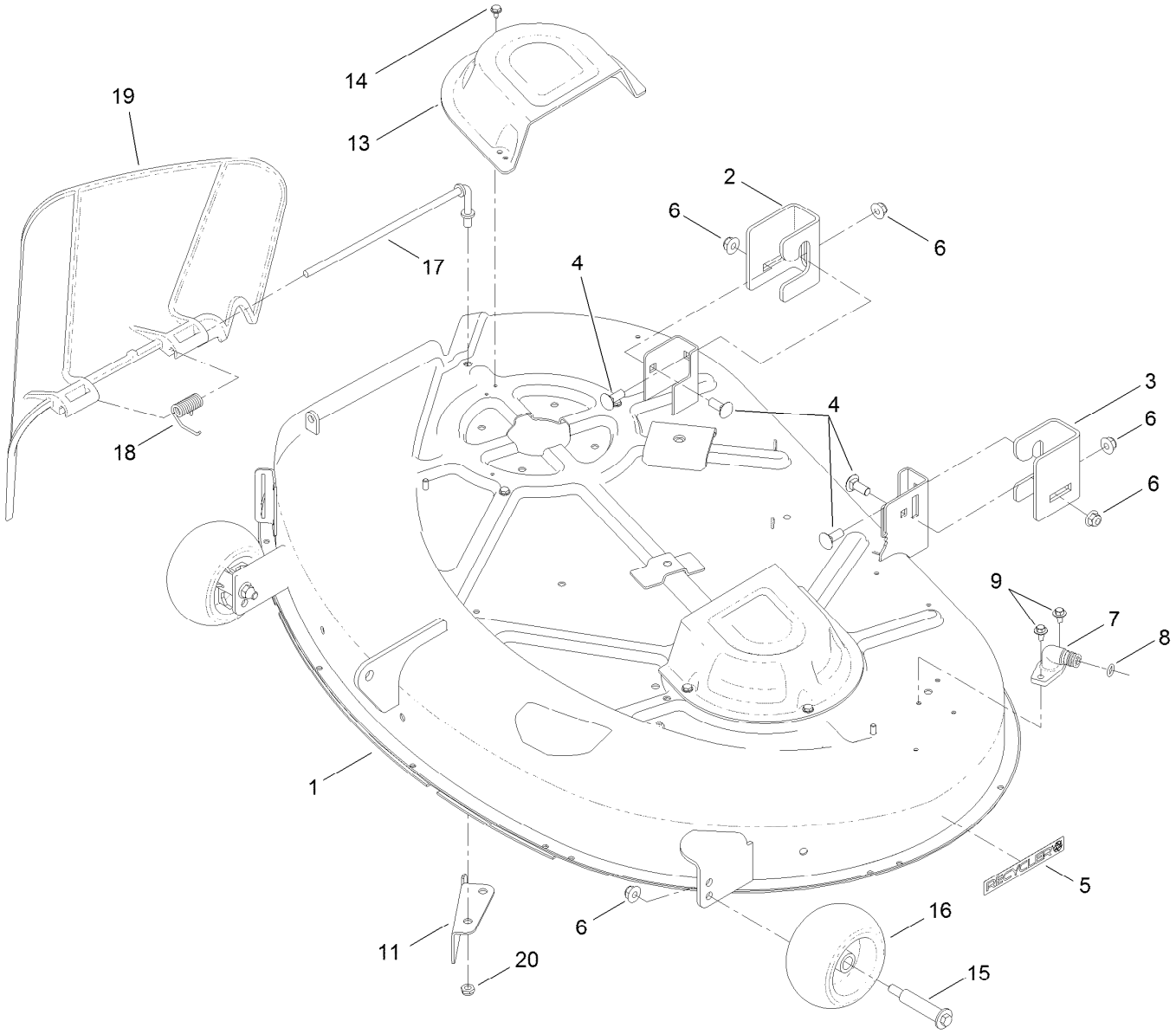

42 Inch Deck Assembly

Ref.	Part Number	Qty.	Description
1	119-8840	1	42 Inch Deck And Decal ASM
2	119-3494	1	Bracket-Hanger, RH
3	119-3496	1	Bracket-Hanger, LH
4	3231-2	4	Screw-CARR
5	119-2368	1	Decal-Recycler
6	104-8301	6	Nut-Flange, NI
7	95-2747	1	Fitting-Washout
8	46-6290	1	O-Ring, Seal
9	46-8560	2	Screw-HHFTF

Ref.	Part Number	Qty.	Description
11	112-3983-03	1	Baffle-Cutoff
13	108-7889	2	Cover-Belt
14	32104-76	6	Screw
15	112-3977	2	Bolt-Shoulder
16	1-603299	2	Roller-Scalp, Anti
17	112-4026	1	Rod-Pivot
18	110-6694	1	Spring-Torsion
19	112-3951	1	Deflector
20	3296-59	1	Nut-Lock, NI

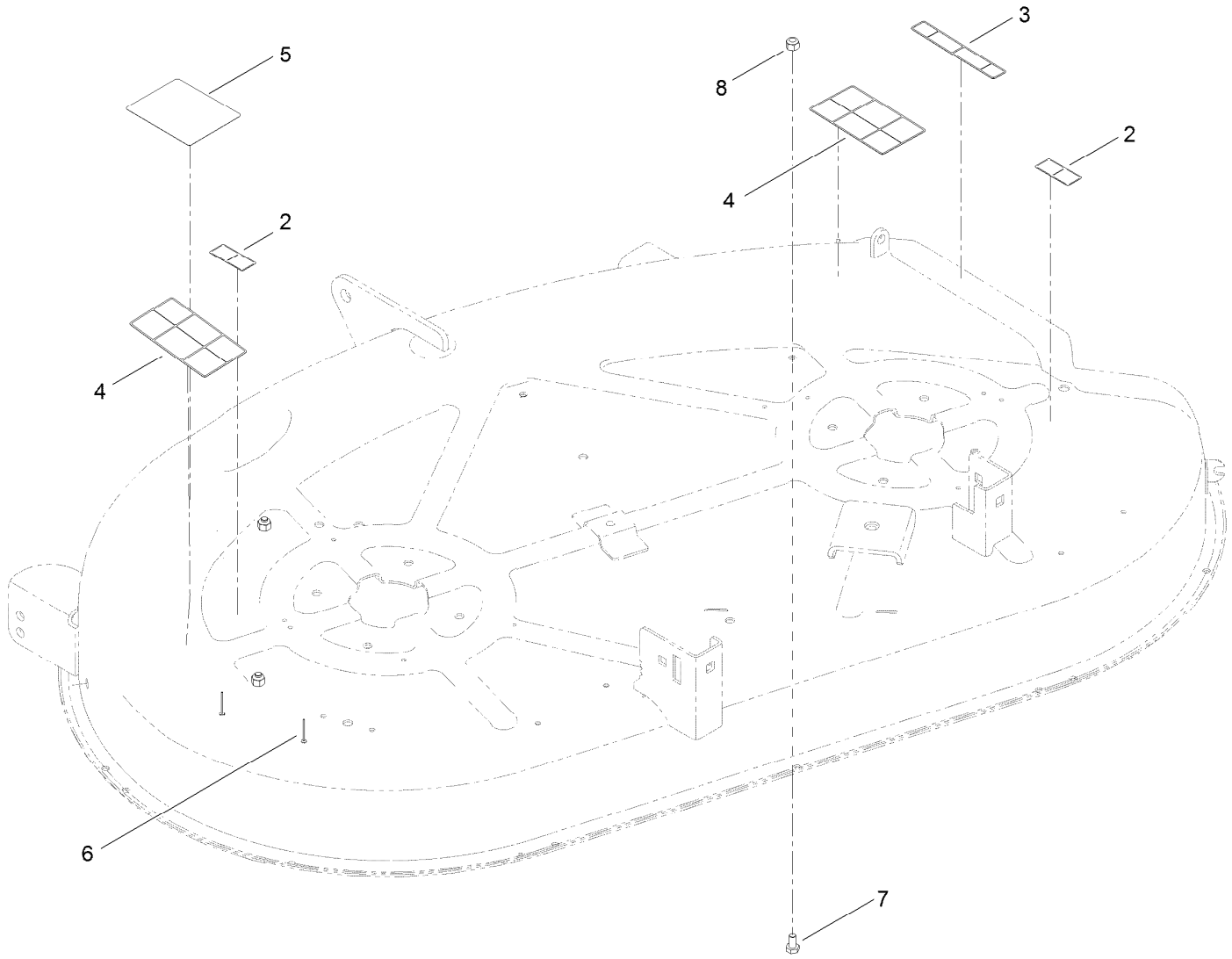

42 Inch Deck Assembly No. 119-8840

Ref.	*Part Number*	*Qty.*	*Description*
2	114-1606	2	Decal-Danger, Pulley
3	93-7009	1	Decal-Danger, Deflector
4	110-6691	2	Decal-Danger
5	105-7015	1	Decal-Routing, Belt
6	3290-282	2	Rivet-Blind
7	321-2	3	Screw-HH
8	3296-42	3	Nut-Lock, NI

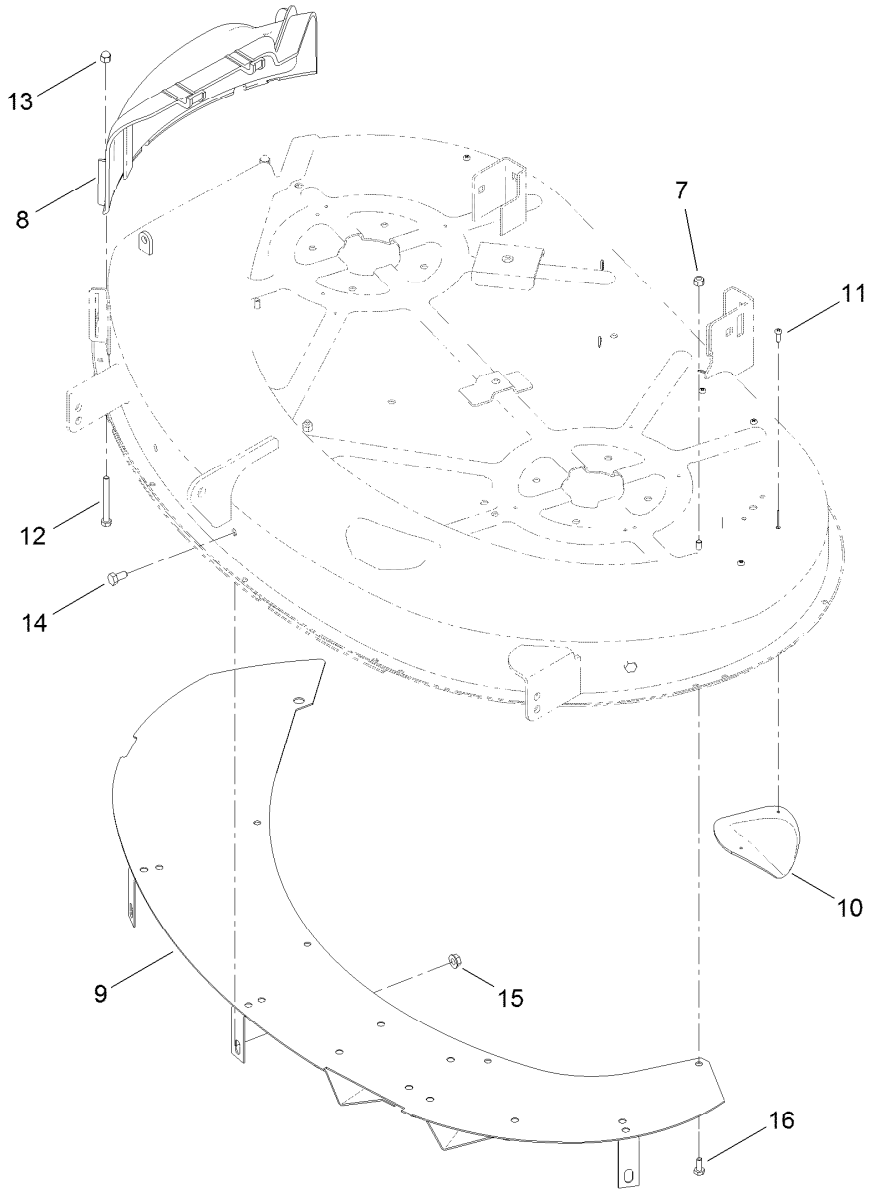

42 Inch Deck Baffle Assembly

Ref.	*Part Number*	*Qty.*	*Description*
7	3296-42	1	Nut-Lock, NI
8	110-6682	1	Cover-Discharge
9	107-7316-03	1	Baffle Upper ASM
10	76-2160	3	Plate-Kicker
11	32144-111	6	Screw-PPH
12	321-15	2	Screw-HH
13	32111-7	2	Nut-Cap
14	322-2	3	Screw-HH
15	32128-25	3	Nut-HF
16	321-3	4	Screw-HH

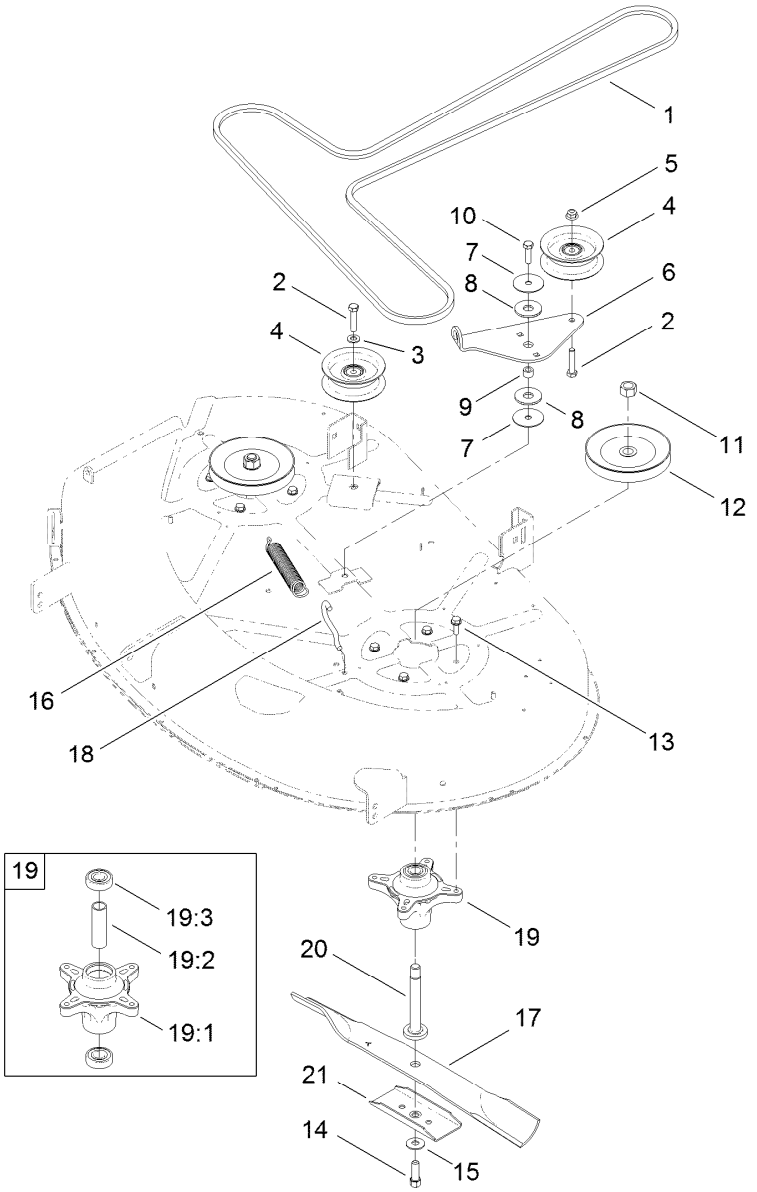

42 Inch Deck, Belt and Blade Assembly

Ref.	Part Number	Qty.	Description
1	119-8819	1	V-Belt
2	323-9	2	Screw-HH
3	3256-24	1	Washer-Flat
4	106-2175	2	Pulley-Idler, Flat
5	104-8301	1	Nut-Flange, NI
6	114-8540	1	Arm-Idler
7	120-2229	2	Washer-Idler Pivot
8	114-0463	2	Washer-Friction, Composite
9	115-4986	1	Spacer
10	323-7	1	Screw-HH
11	3219-6	2	Nut-Hex
12	110-6864	2	Pulley

Ref.	Part Number	Qty.	Description
13	32144-41	8	Screw-Taptite
14	26-0671	2	Screw-HH
15	3290-465	2	Washer-Belleville
16	106-2177	1	Spring-Extension
17	106-2247-03	2	Blade
18	88-5970	1	Hook-Return, Spring
19	117-7439	2	Spindle ASM
19:1	117-7267	1	Spindle
19:2	117-7269	1	Spacer
19:3	100-1048	2	Bearing-Ball
20	117-7268	2	Shaft-Spindle
21	106-2248-03	2	Stiffener-Blade

Attachments and Accessories

For 74386 TimeCutter ZS 4200 Riding Mower

Product Name	Model/Part
Armrest Kit (Milsco)	105-6978
42 inch Blowout Ring Kit	114-1620
Hourmeter Kit, 2011 and After TimeCutter Riding Mower	120-5498
Striping Kit, 42in and 50in Mowers for TimeCutter Z Riding Mower	120-7905
Foot Assist Deck Lift Kit, 2011 and After Zero-Turn-Radius Riding Mower	79010
Sunshade Kit, 2011 and After Zero-Turn-Radius Riding Mower	79011
Hitch Kit, Zero-Turn-Radius Riding Mower	79014
Floor Mat Kit, 2011 and After Zero-Turn-Radius Riding Mower w/ 32in or 42in Cutting Unit	79020
42 inch Replacement Blade Kit	79220
Storage Cover	79317
42in Bagger, 2011 and After TimeCutter 4000 Series Riding Mower	79334
10 cu. ft. Poly Dump Cart	79991

Notes:



Count on it.