Form No. 3366-477 Rev A

Count on it.

Parts Catalog

TimeCutter® Z5060 Riding Mower

Model No. 74630—Serial No. 311000001 and Up

Register at www.Toro.com.

Original Instructions (EN)

Ordering Replacement Parts

To order replacement parts, please supply the part number, the quantity, and the description of each part desired.

Understanding Reference Numbers

Each identified part in an illustration has a reference number. The reference number for a part also appears in the parts list, along with other information about the part.

This catalog uses two special reference number formats, one to indicate parts in a service assembly and another to indicate the quantity of a given part in an illustration.

Service Assembly Reference Numbers

Parts in service assemblies have reference numbers in the form a:b. The a represents the reference number of the entire service assembly and the b represents a sequential number unique to each part within the service assembly.

For example, a wheel assembly might be identified by reference number 6, the tire by 6:1, the valve by 6:2, and the wheel by 6:3. When you order the assembly identified by reference number 6, you receive all parts identified by reference numbers 6:1,6:2, and 6:3. However, you may also order any part individually. Reference numbers of this type appear in illustration and in parts lists.

Reference Numbers Indicating Quantity

In an illustration, if a reference number indicates more than one part, the reference number has the form nX y. The n represents the quantity of the part, the X is the multiplication symbol, and the y represents the reference number.

For example, in an illustration, the reference number 2X 37 means that two of the parts identified by reference number 37 are indicated.

List of Abbreviations

AR: as required

ASM: assembly

BBC: blade brake control

BHTF: button head thread forming

CARR: carriage

CCW: counter clockwise

CW: clockwise

DEG: degrees

DPA: Dual Point Adjustment

ECM: electronic control module

EXT: external

FH: flat head

GA: gauge

HD: heavy-duty

HF: hex flange

HH: hex head

HHF: hex head flange

HHFTF: hex head flange thread forming

HJ: hex jam

HLH: hex lag head

HOC: height-of-cut

HSBH: hex socket button head

HSFH: hex socket flat head

HSH: hex socket head

HWH: hex washer head

HWHTF: hex washer head thread forming

HYD: hydraulic

LH: left hand

LP: Liquid Propane

NI: nylon insert

NPTF: national pipe thread fine

PFH: phillips flat head

PPH: phillips pan head

PPHTF: phillips pan head thread forming

PRH: phillips round head

PTH: phillips truss head

PTO: power-take-off

RH: right hand

ROPS: roll-over protection system

RRB: rear roller brush

SFH: slotted fillister head

SHH: slotted hex head

SHWH: slotted hex washer head

SPH: slotted pan head

SQH: square head

SRH: slotted round head

STD: standard

TAP: self tapping

TTH: torx truss head

© 2011—The Toro® Company
8111 Lyndale Avenue South
Bloomington, MN 55420

Contact us at www.Toro.com.
Printed in the USA.
All Rights Reserved

Contents

Frame, Front Axle and Caster Wheel Assembly 4
13 Inch Wheel and Tire Assembly 5
Deck Lift Assembly 6
Seat Assembly 7
Motion Control Assembly 8
Engine and Clutch Assembly 10
Hydro Transaxle Drive and Rear Wheel Assembly 11
LH Hydro Transaxle Assembly No. 119-3350 12
RH Hydro Transaxle Assembly No. 119-3351 14
Body Styling and Fuel Tank Assembly 16
Fuel Delivery Assembly 17
Battery and Electrical Assembly 18
50 Inch Deck Assembly 19
50 Inch Deck Decal Assembly No. 119-8841 20
50 Inch Deck Belt, Spindle and Hi-Lift Blade Assembly 21
Attachments and Accessories 22

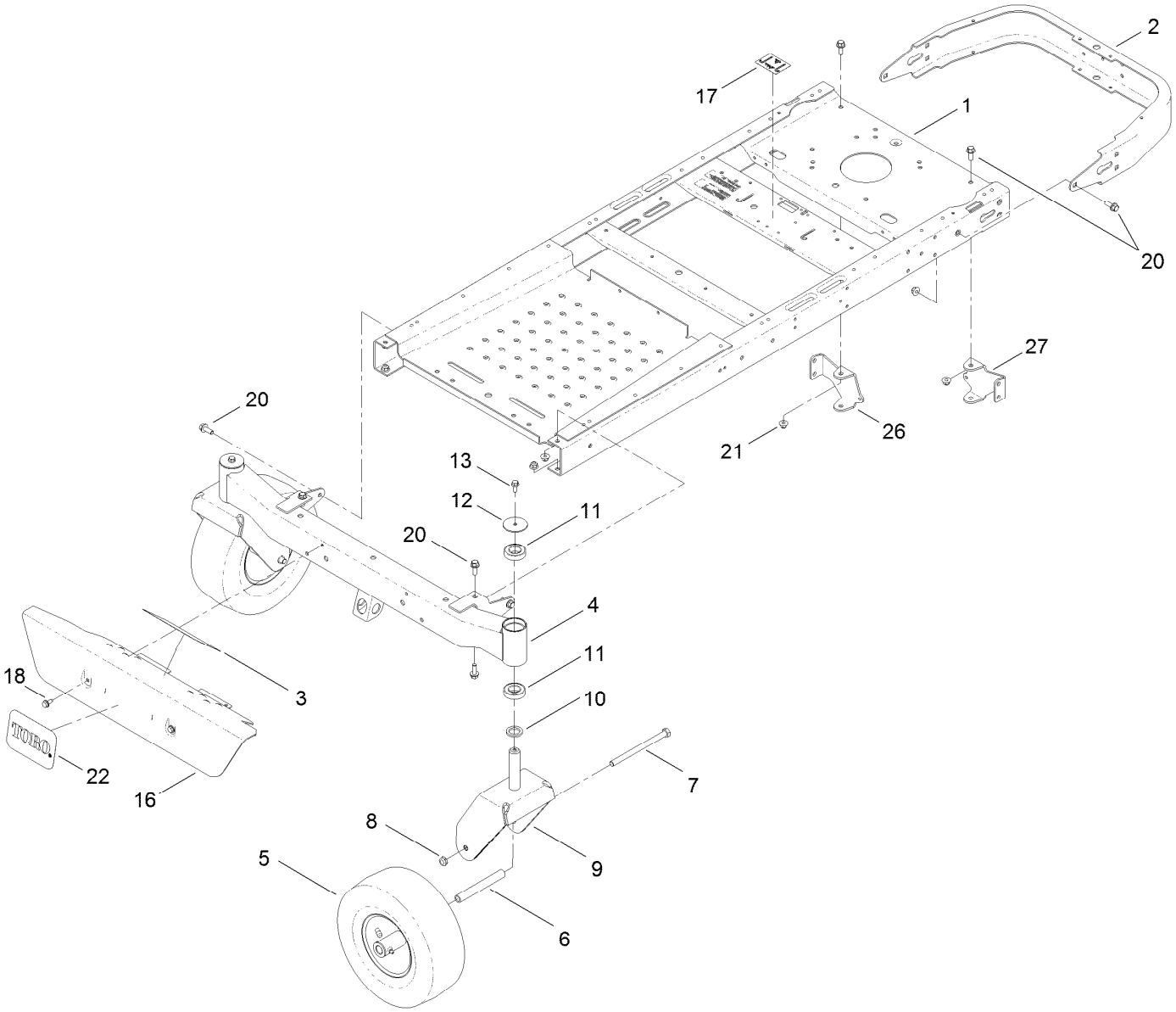

Frame, Front Axle and Caster Wheel Assembly

Ref.	Part Number	Qty.	Description
1	117-7403-01	1	Frame ASM
2	117-7415-01	1	Bumper-Rear (Wide)
3	120-2239	1	Decal-Danger
4	120-5513-01	1	Axle-Front, Wide
5	119-3473	2	13 Inch Tire And Wheel ASM
6	119-3475	2	Spanner
7	325-37	2	Screw-HH
8	3296-45	2	Nut-Lock, NI
9	119-3349-01	2	Fork-Caster, Wide
10	117-7394	2	Washer-Thrust
11	109-3678	4	Bearing-Ball
12	119-8915	2	Washer
13	3234-47	2	Screw-HHF
16	117-7424-03	1	Footrest
17	120-5465	1	Decal-Transport
18	32144-70	2	Screw-HWHTF
20	3234-42	14	Screw-HHF
21	104-8301	14	Nut-Flange, NI
22	99-4693	1	Decal
26	117-7459-01	1	Mount-Hydro, Rear (RH)
27	117-7460-01	1	Mount-Hydro, Rear (LH)

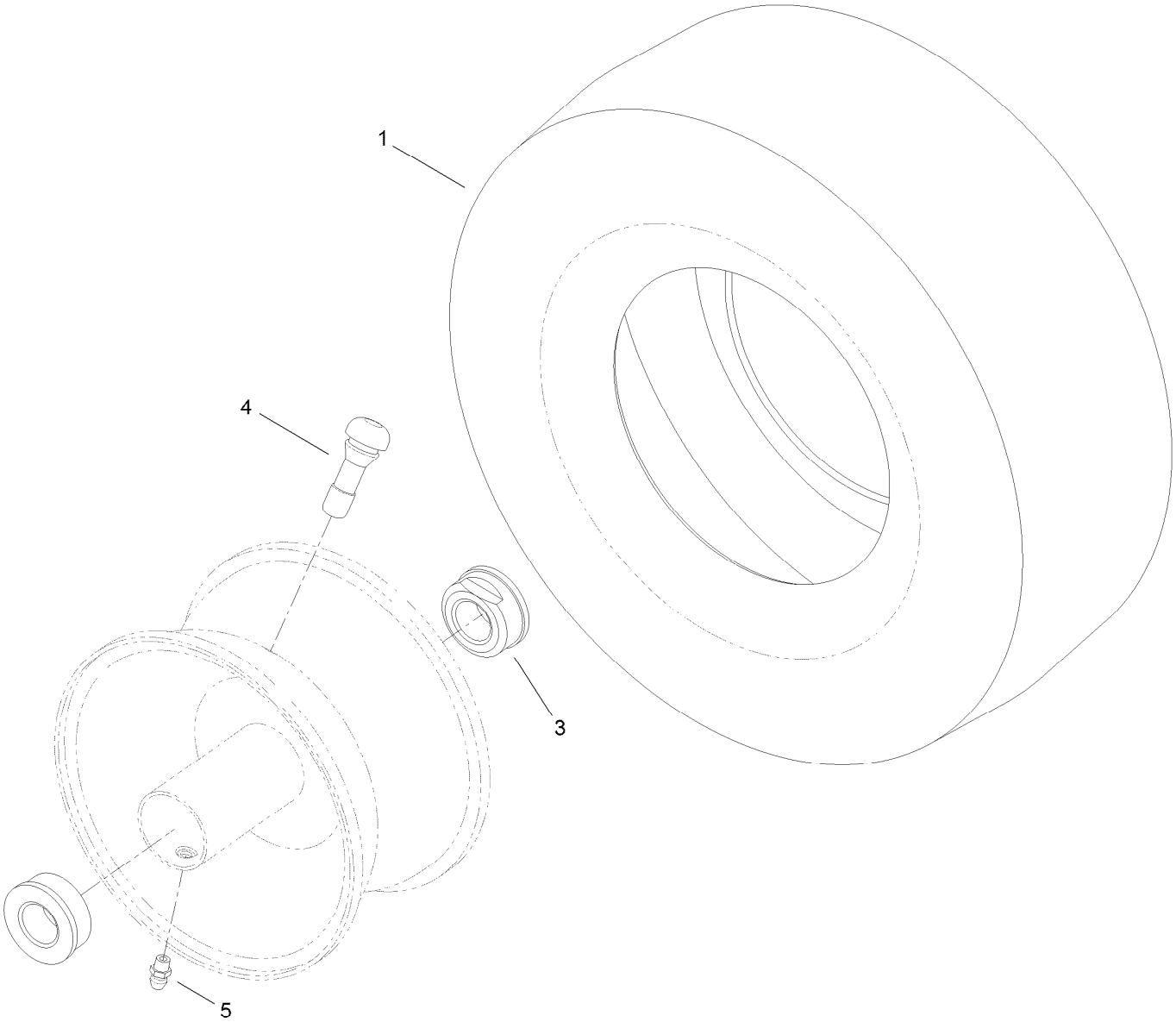

13 Inch Wheel and Tire Assembly

Ref.	*Part Number*	*Qty.*	*Description*
1	119-3471	1	Tire-13 Inch
3	114-1640	2	Bushing-Flange
4	232-27	1	Stem-Valve
5	302-5	1	Fitting-Grease

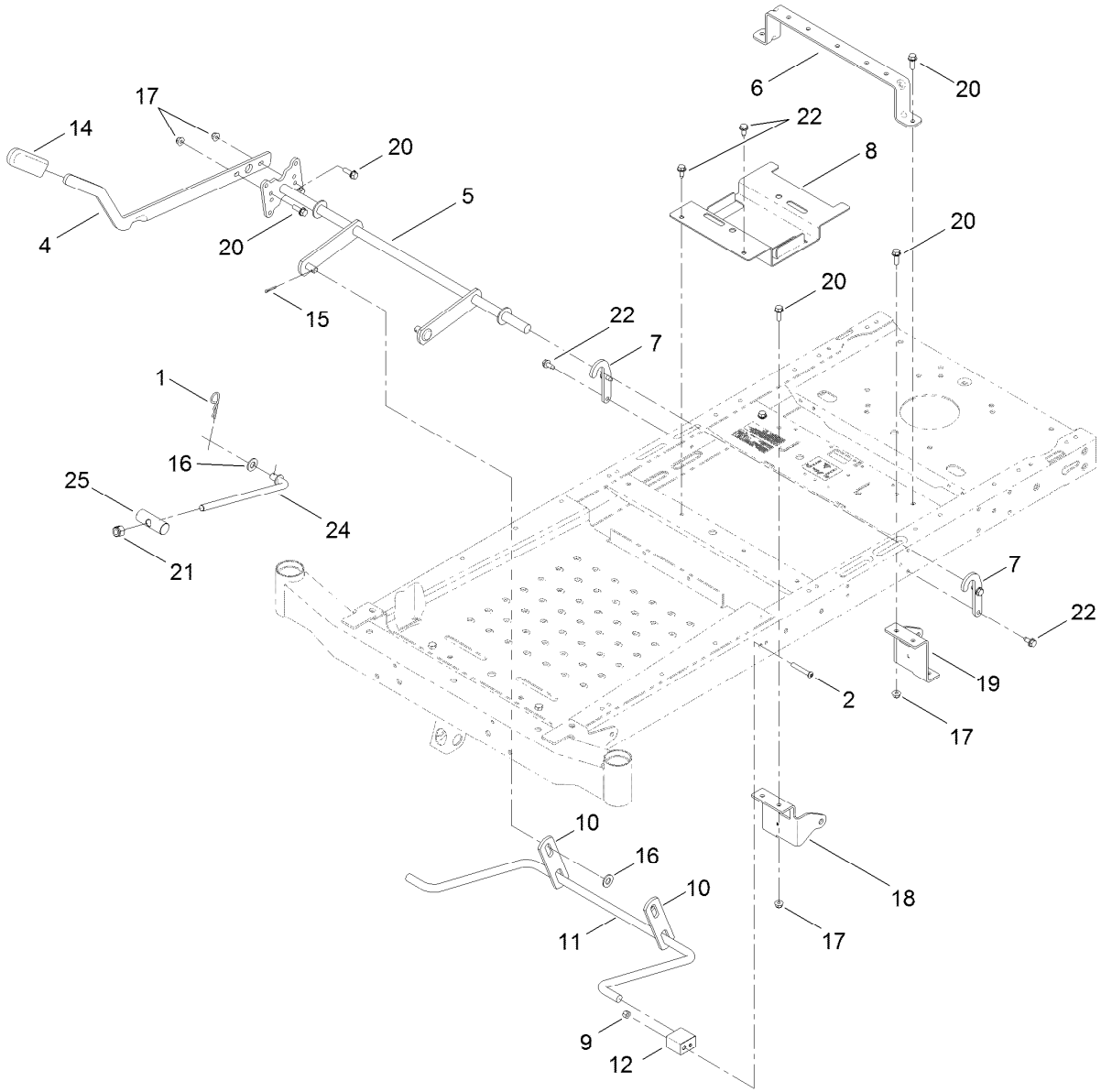

Deck Lift Assembly

Ref.	Part Number	Qty.	Description
1	1-806005	1	Pin-Hair
2	120-5499	2	Screw-HSBH
4	119-3427-03	1	Lever-Lift
5	119-3424-03	1	Deck Lift ASM
6	117-7337-03	1	Brace-Seat, Rear
7	119-8875	2	Bracket-Lift
8	119-3406-03	1	Bracket-Battery
9	3296-29	2	Nut-Lock, NI
10	108-7840	2	Link-Lift
11	119-3347	1	Arm-Lift, Rear
12	108-7845	2	Block-Pivot

Ref.	Part Number	Qty.	Description
14	1-633268	1	Grip-Lever
15	3272-10	2	Pin-Cotter
16	3256-26	3	Washer-Flat
17	104-8300	6	Nut-Flange, NI
18	119-8861-01	1	Mount-Hydro, Front (RH)
19	119-8862-01	1	Mount-Hydro, Front (LH)
20	3234-29	6	Screw-HHF
21	3296-19	1	Nut-Hex
22	32144-70	6	Screw-HWHTF
24	104-8047	1	Rod-Trunion
25	119-8810	1	Pin-Pivot

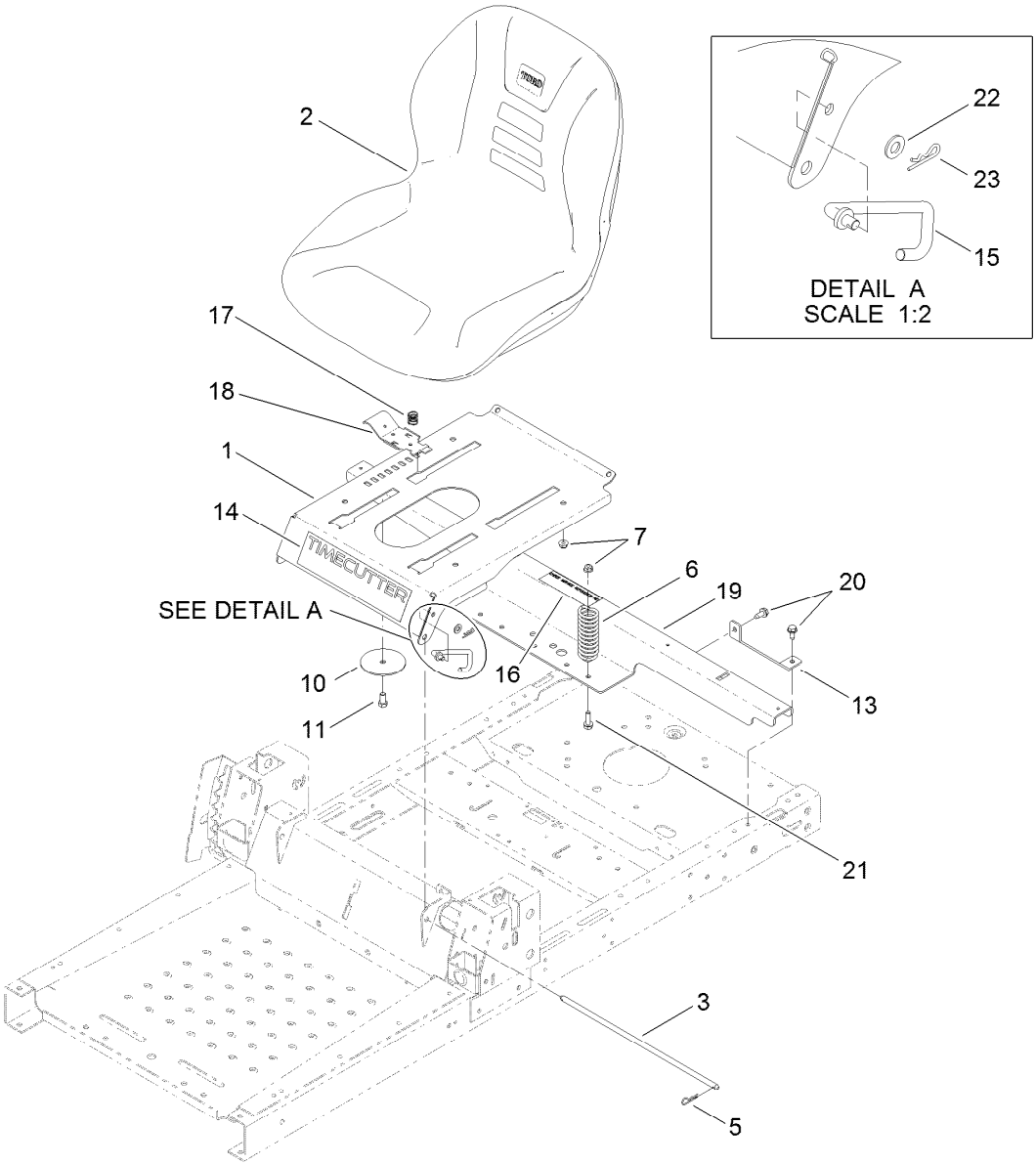

Seat Assembly

Ref.	Part Number	Qty.	Description
1	119-3390-01	1	Pan-Seat
2	119-8843	1	Seat-18 Inch
3	115-4966	1	Rod-Stop
5	3290-250	2	Pin-Hair
6	92-7054	3	Spring-Compression
7	104-8300	3	Nut-Flange, NI
10	117-5307	1	Washer-Seat
11	323-4	1	Screw-HH
13	119-3431-03	2	Support-Tank, Rear
14	119-8903	1	Decal-Timecutter

Ref.	Part Number	Qty.	Description
15	119-8972	1	Stop-Seat
16	106-8717	1	Decal-Service
17	115-9624	1	Spring-Compression
18	115-9623	1	Latch-Seat
19	119-3414-03	1	Support-Pod
20	32144-70	4	Screw-HWHTF
21	3234-29	3	Screw-HHF
22	3256-23	1	Washer-Flat
23	3290-307	1	Pin-Hair

Motion Control Assembly

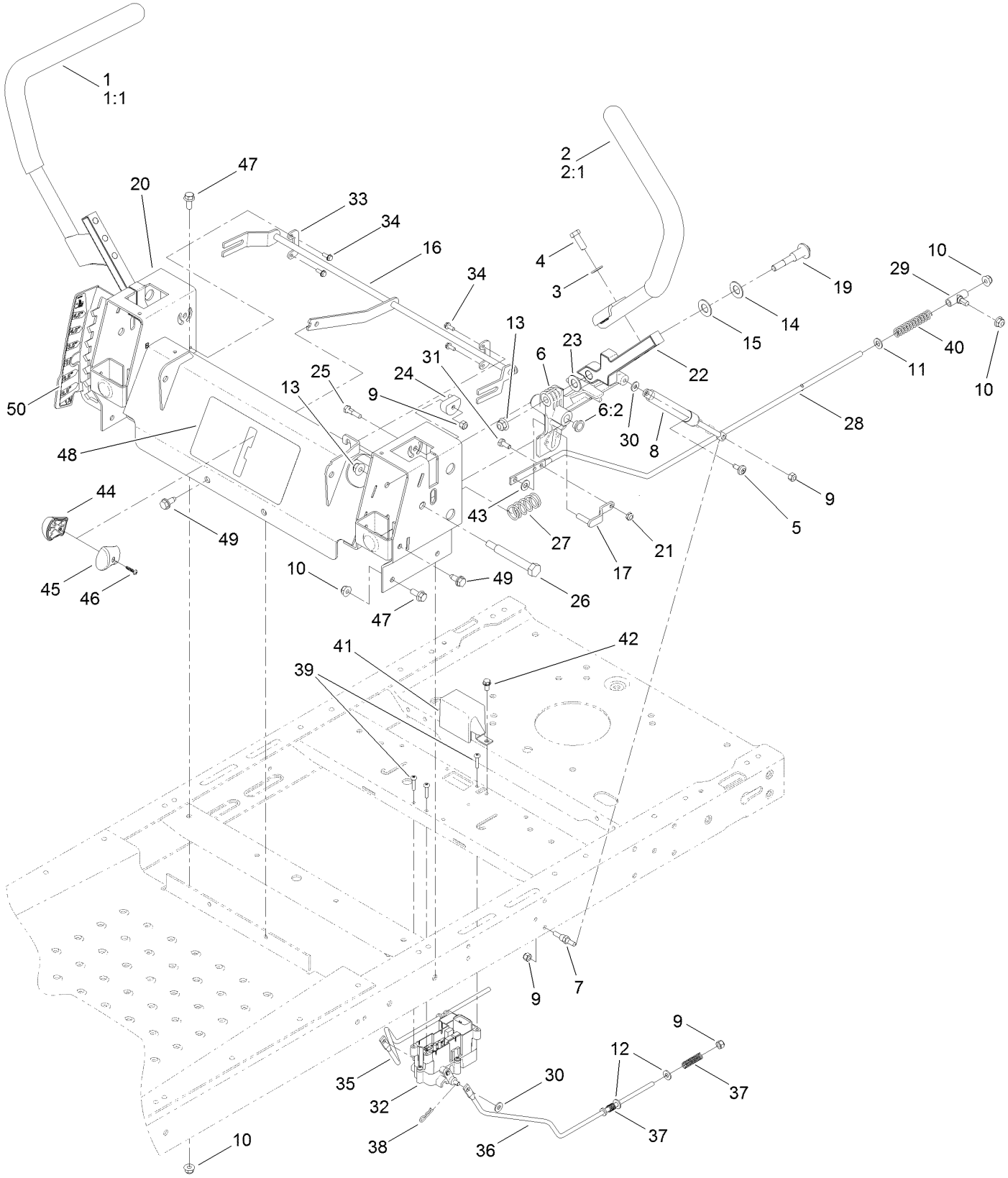

Motion Control Assembly (continued)

Ref.	Part Number	Qty.	Description
1	119-3486	1	RH Handle ASM
1:1	108-6187	1	Grip
2	119-3485	1	LH Handle ASM
2:1	108-6187	1	Grip
3	3256-24	4	Washer-Flat
4	323-6	4	Screw-HH
5	112-4004	2	Screw-Shoulder
6	119-3470	2	Actuator Arm ASM
6:2	256-156	2	Bushing-Flange
7	110-6810	2	Stud-Damper
8	103-2913	2	Damper-Control, Motion
9	3296-42	8	Nut-Lock, NI
10	104-8300	10	Nut-Flange, NI
11	3256-23	2	Washer-Flat
12	3256-22	4	Washer-Flat
13	104-8301	4	Nut-Flange, NI
14	119-8925	2	Washer-Belleville
15	117-1240	2	Washer
16	119-3300	1	Control-Speed
17	119-3303	2	Pin-Rod, Hydro
19	117-1198	2	Bolt-Pivot
20	119-3387-03	1	Box-Control
21	3296-56	2	Nut-Lock, NI
22	115-5098-05	2	Lever-Control
23	120-2273	2	Washer-Nylon
24	115-9604	2	Eccentric

Ref.	Part Number	Qty.	Description
25	119-3301	2	Bolt-Pivot, Eccentric
26	115-5099	2	Bolt-Pivot
27	119-8876	2	Spring-Return
28	117-5388	2	Rod-Hydro
29	119-8842	2	Mount-Rod, Hydro
30	119-8952	4	Washer
31	321-3	2	Screw-HH
32	115-9660	1	Brake Control Module ASM
33	117-5385	2	Retainer
34	32144-1	4	Screw-Taptite
35	117-5384	1	Rod-Brake, RH
36	117-1278	1	Rod-Brake, LH
37	117-1169	4	Spring-Compression
38	3290-307	2	Pin-Hair
39	32144-36	4	Screw-PPH
40	1-603807	2	Spring-Return, Neutral
41	119-8859	1	Cover-Brake
42	32144-4	1	Screw-HWH
43	93-6079	2	Spacer-Nylon
44	119-8935	1	RH Knob ASM
45	119-8936	1	LH Knob ASM
46	94-4496	1	Screw-PPH
47	3234-47	6	Screw-HHF
48	119-8874	1	Decal-Speed Control
49	32144-70	4	Screw-HWHTF
50	119-8870	1	Decal-HOC

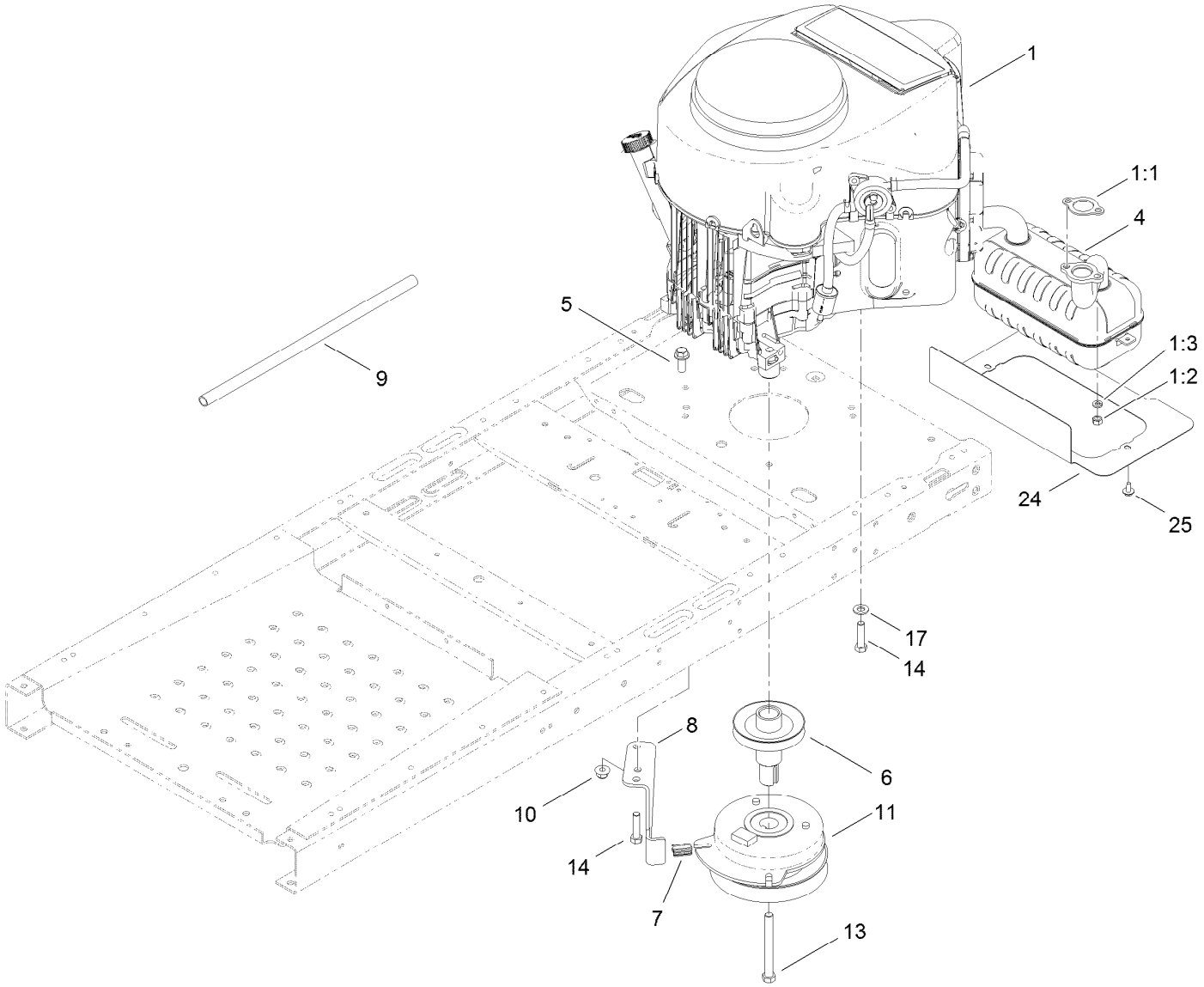

Engine and Clutch Assembly

Ref.	Part Number	Qty.	Description
1		1	Engine-Kawasaki, Fr651V-As06-R ●■
1:1	1-653313	2	Gasket-Exhaust
1:2	114-3549	4	Nut
1:3	114-3550	4	Washer-Lock, Spring
4	117-7256	1	Muffler-Kawasaki
5	3234-42	1	Screw-HHF
6	119-3318	1	Pulley-Engine
7	120-2217	1	Isolator-Clutch
8	119-8885	1	Stop-Clutch
9	106-7022	1	Tube-Drain, Oil
10	104-8301	1	Nut-Flange, NI
11	110-6766	1	Clutch-Electric, PTO
13	3212-17	1	Screw-HH
14	323-50	4	Bolt-HH
17	3256-24	3	Washer-Flat
24	119-8976-03	1	Shield-Heat
25	46-8560	2	Screw-HHFTF

● Not serviced separately

■ Obtain parts from www.kawpowerepc.com

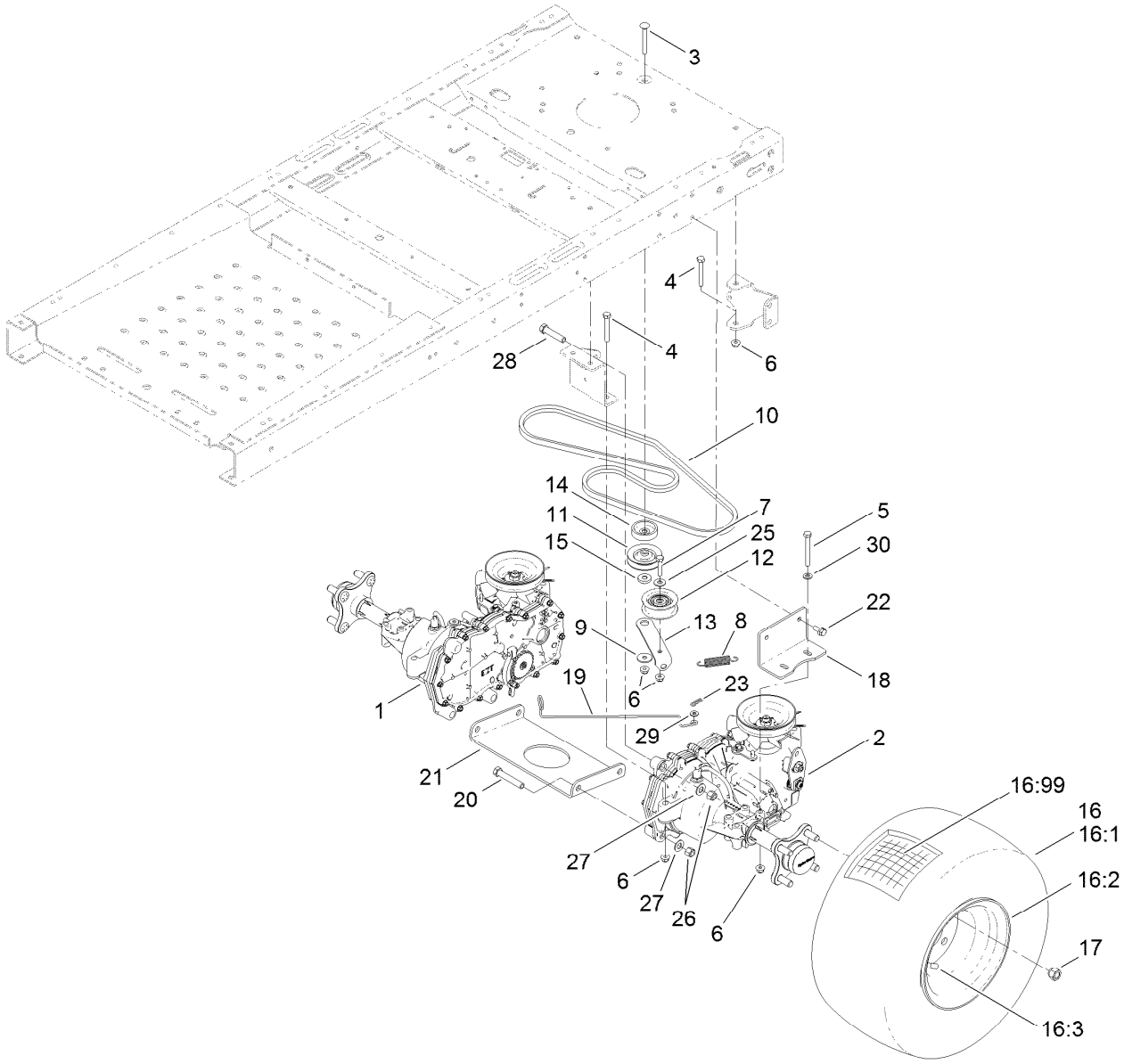

Hydro Transaxle Drive and Rear Wheel Assembly

Ref.	Part Number	Qty.	Description
1	119-3351	1	Transaxle-Hydro, RH
2	119-3350	1	Transaxle-Hydro, LH
3	3230-8	1	Screw-CARR
4	322-11	4	Screw-HH
5	322-13	4	Screw-HH
6	104-8300	14	Nut-Flange, NI
7	322-7	1	Screw-HH
8	104-6415	1	Spring-Return, Pedal
9	5-4460	1	Washer-Pivot
10	119-3321	1	V-Belt
11	119-8822	1	Pulley-Idler
12	106-2176	1	Pulley-Idler
13	119-3326	1	Arm-Idler
14	119-3353	1	Spacer
15	119-3327	1	Spacer-Arm, Idler
16	119-8908	2	Wheel And Tire ASM
16:1	119-8909	1	Tire

Ref.	Part Number	Qty.	Description
16:2	217-60	1	Rim
16:3	232-27	1	Stem-Valve
16:99	232-37	1	Tube
17	242-50	8	Nut-Lug
18	117-7264-03	2	Mount-Hydro
19	119-3464	2	Rod-Bypass
20	324-10	4	Screw-HH
21	119-3342-03	1	Cross Plate-Hydro
22	3234-29	4	Screw-HHF
23	3290-307	2	Pin-Hair
25	3256-3	1	Washer-Flat
26	3296-48	6	Nut-Lock, NI
27	3256-25	6	Washer-Flat
28	324-8	2	Screw-HH
29	3256-22	2	Washer-Flat
30	3256-23	4	Washer-Flat

LH Hydro Transaxle Assembly No. 119-3350

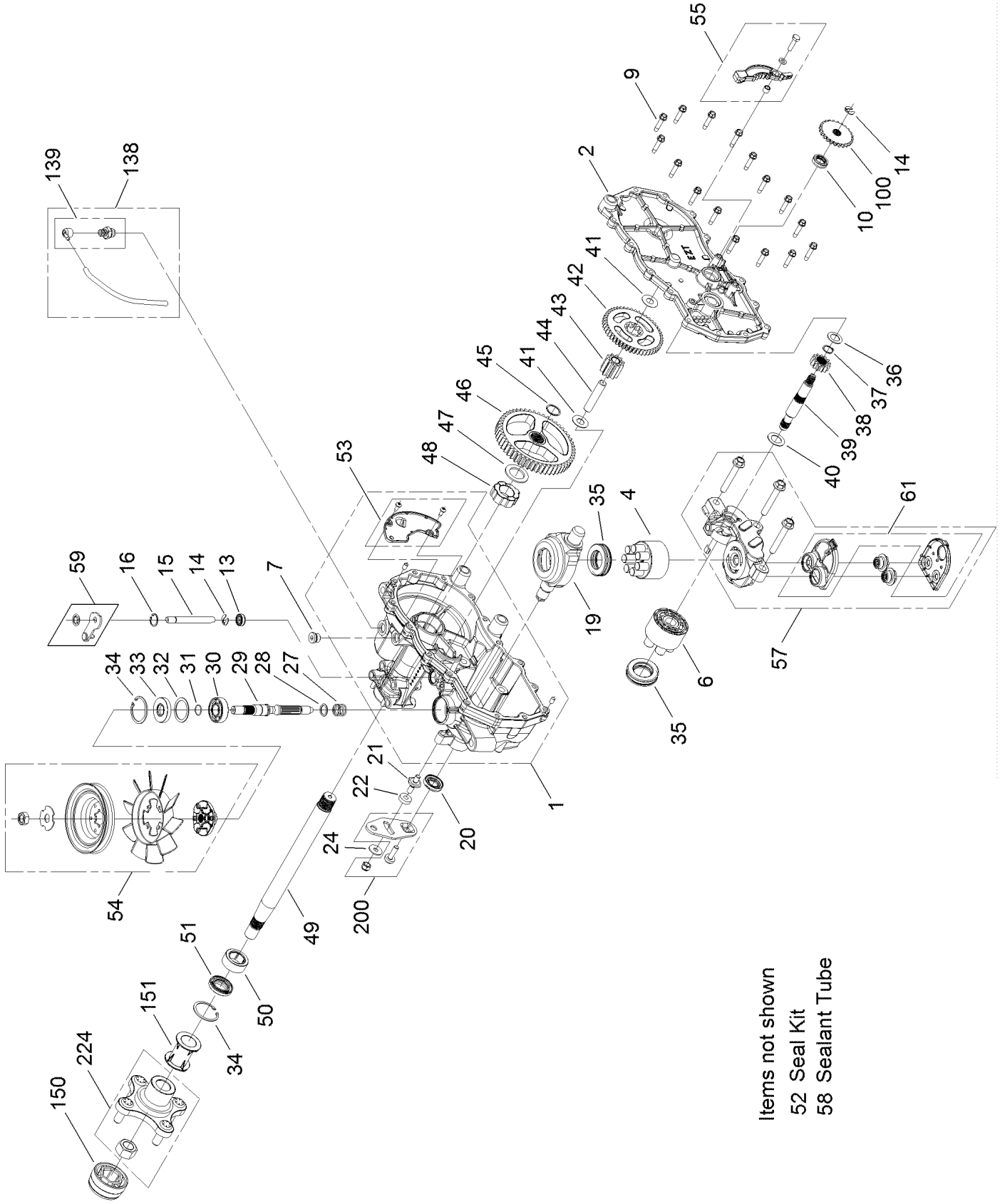

LH Hydro Transaxle Assembly No. 119-3350 (continued)

Ref.	Part Number	Qty.	Description
1	106-8695	1	Main Housing ASM
2	106-8696	1	Side ASM
4	110-8561	1	Pump Block ASM
6	103-2666	1	Cylinder Block Kit
7	104-2189	1	Plug-Thread, Straight
9	104-5305	16	Screw-HHF
10	104-5347	1	Seal-Oil
13	106-8676	1	Seal-Lip
14	106-8677	2	Ring-Retaining, EXT
15	106-8678	1	Rod-Bypass
16	106-8679	1	Ring-Retaining, Int
19	104-5304	1	Swashplate-Trunnion
20	104-5313	1	Seal-Lip
21	104-2116	1	Stud
22	112-9853	1	Puck-Friction
24	114-8491	1	Washer
27	120-5537	1	Spring-Compression
28	120-5538	1	Washer
29	104-5306	1	Shaft-Input
30	104-5311	1	Bearing-Ball
31	104-5307	1	Ring-Retaining
32	104-5308	1	Spacer
33	104-5310	1	Seal-Lip
34	104-5309	2	Ring-Retaining
35	94-6922	2	Bearing-Thrust
36	104-5339	1	Washer-Flat
37	104-5340	1	Ring-Retaining
38	104-5316	1	Gear-Pinnion, 13T
39	106-8683	1	Shaft-Motor
40	104-5360	1	Washer-Shaft, Motor
41	119-5541	2	Washer
42	104-5317	1	Gear
43	104-5318	1	Gear-Jackshaft, 10T
44	104-5329	1	Pin-Jackshaft
45	112-9854	1	Ring-Spiral, Retaining
46	112-9855	1	Gear-52T, Bull
47	112-9856	1	Washer
48	112-9857	1	Bearing-Sleeve
49	120-7104	1	Shaft-Axle
50	112-9859	1	Bushing-Axle
51	112-9860	1	Seal-Lip
52	106-8686	1	Seal Kit ●
53	106-8697	1	Expansion Plate Kit
54	105-1928	1	Fan Pulley Kit
55	106-8688	1	Brake Arm Kit
57	112-9861	1	Center Section Filter Kit
58	104-2147	1	Sealant ●
59	120-5549	1	Bypass Kit
61	114-1634	1	Filter Kit
100	106-8694	1	Disc-Brake, Cog
138	112-9866	1	Breather Kit
139	114-1635	1	Breather ASM
150	115-5057	1	Cover-Nut, Axle
151	120-7109	1	Tube-Axle
200	117-5362	1	Arm Control Kit
224	120-7110	1	Hub ASM

● Not illustrated

RH Hydro Transaxle Assembly No. 119-3351

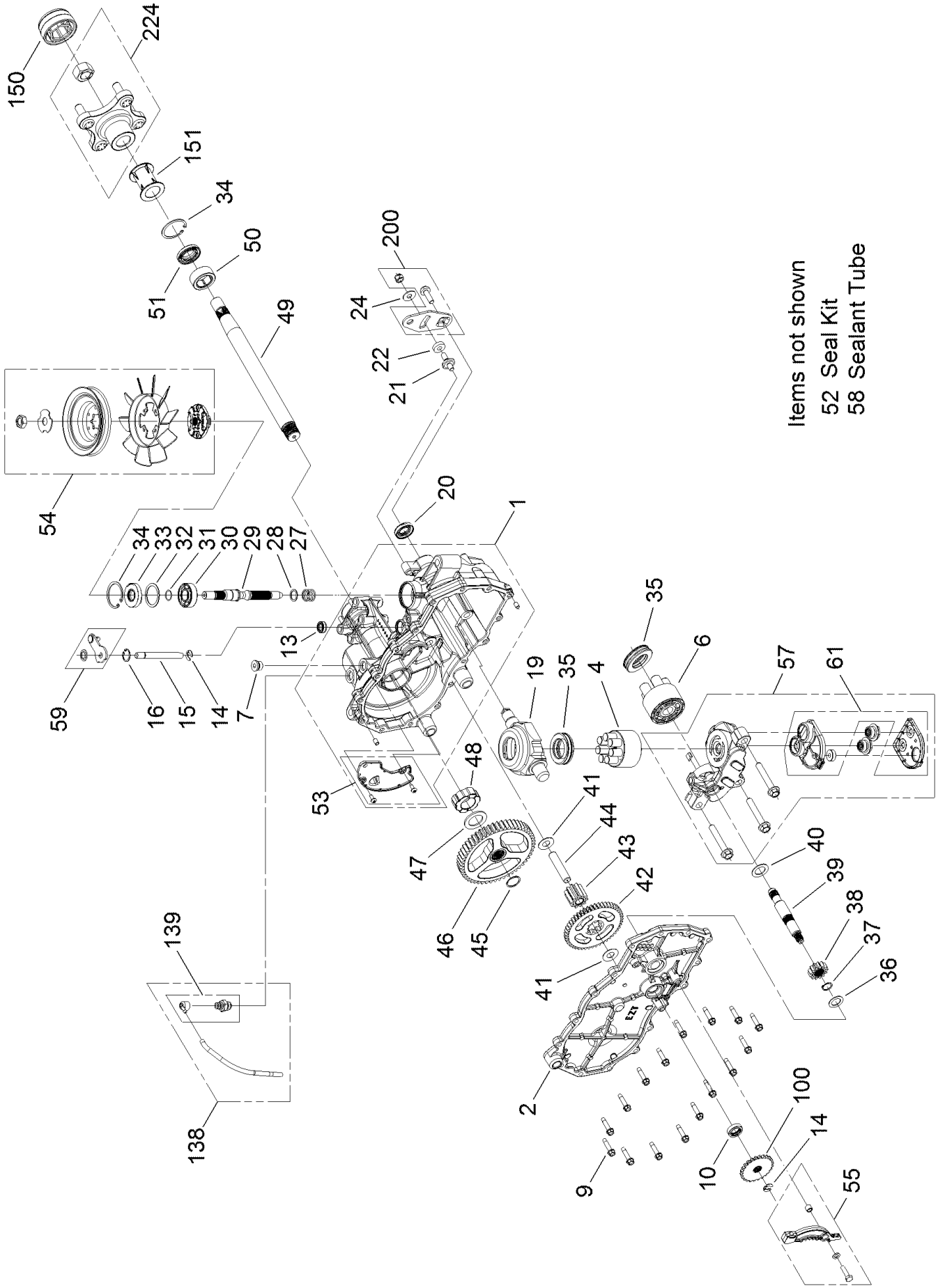

RH Hydro Transaxle Assembly No. 119-3351 (continued)

Ref.	Part Number	Qty.	Description
1	106-8674	1	Main Housing ASM
2	106-8675	1	Side ASM
4	110-8561	1	Pump Block ASM
6	103-2666	1	Cylinder Block Kit
7	104-2189	1	Plug-Thread, Straight
9	104-5305	16	Screw-HHF
10	104-5347	1	Seal-Oil
13	106-8676	1	Seal-Lip
14	106-8677	1	Ring-Retaining, EXT
15	106-8678	1	Rod-Bypass
16	106-8679	1	Ring-Retaining, Int
19	104-5304	1	Swashplate-Trunnion
20	104-5313	1	Seal-Lip
21	104-2116	1	Stud
22	112-9853	1	Puck-Friction
24	114-8491	1	Washer
27	120-5537	1	Spring-Compression
28	120-5538	1	Washer
29	104-5306	1	Shaft-Input
30	104-5311	1	Bearing-Ball
31	104-5307	1	Ring-Retaining
32	104-5308	1	Spacer
33	104-5310	1	Seal-Lip
34	104-5309	1	Ring-Retaining
35	94-6922	2	Bearing-Thrust
36	104-5339	1	Washer-Flat
37	104-5340	1	Ring-Retaining
38	104-5316	1	Gear-Pinnion, 13T
39	106-8683	1	Shaft-Motor
40	104-5360	1	Washer-Shaft, Motor
41	119-5541	2	Washer
42	104-5317	1	Gear
43	104-5318	1	Gear-Jackshaft, 10T
44	104-5329	1	Pin-Jackshaft
45	112-9854	1	Ring-Spiral, Retaining
46	112-9855	1	Gear-52T, Bull
47	112-9856	1	Washer
48	112-9857	1	Bearing-Sleeve
49	120-7104	1	Shaft-Axle
50	112-9859	1	Bushing-Axle
51	112-9860	1	Seal-Lip
52	106-8686	1	Seal Kit ●
53	106-8687	1	Expansion Plate Kit
54	120-7105	1	Fan Pulley Kit
55	106-8688	1	Brake Arm Kit
57	112-9862	1	Center Section Filter Kit
58	104-2147	1	Sealant ●
59	107-2489	1	Bypass Arm Kit
61	114-1634	1	Filter Kit
100	106-8694	1	Disc-Brake, Cog
138	112-9866	1	Breather Kit
139	114-1635	1	Breather ASM
150	115-5057	1	Cover-Nut, Axle
151	120-7109	1	Tube-Axle
200	117-5362	1	Arm Control Kit
224	120-7110	1	Hub ASM

● Not illustrated

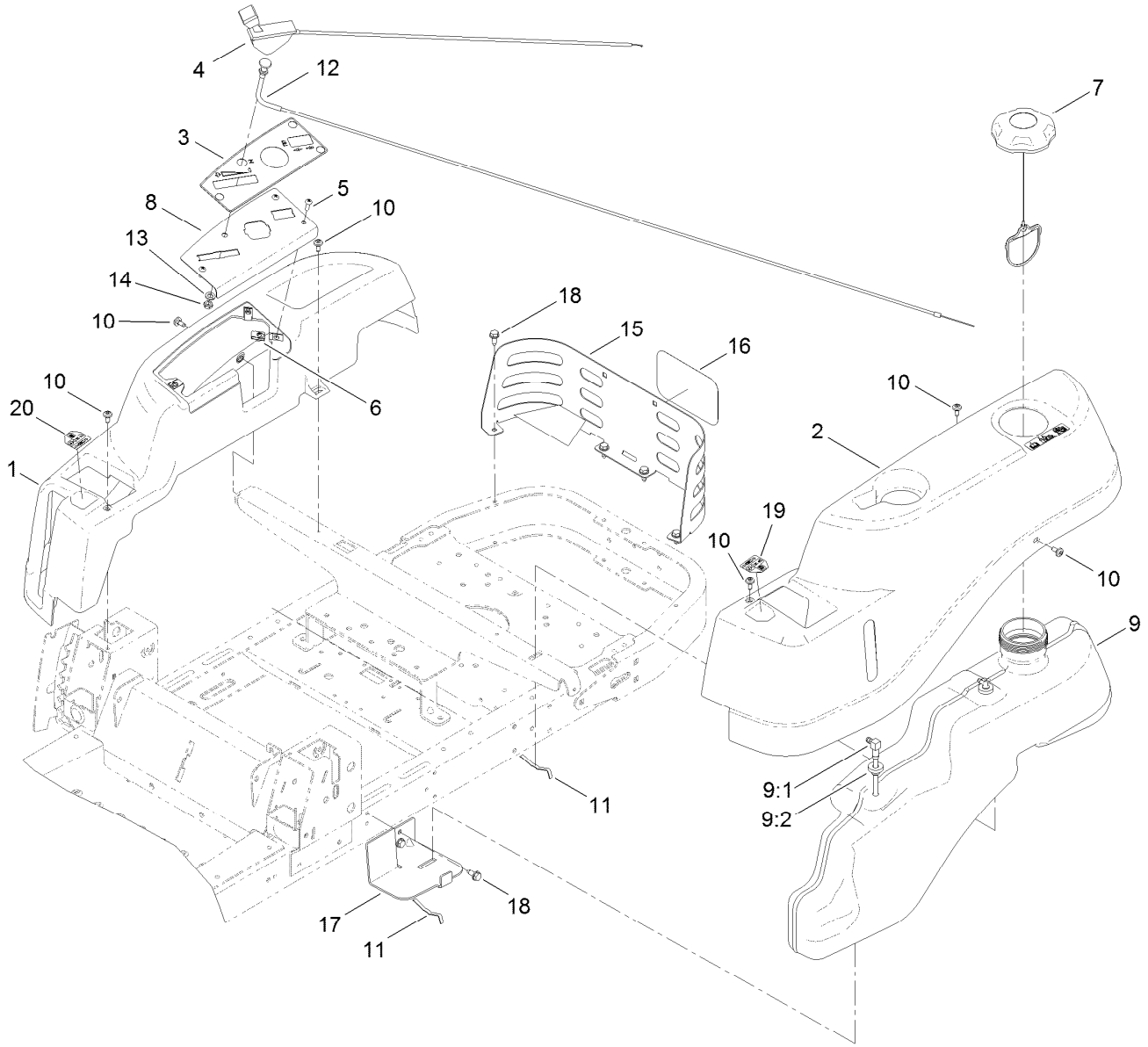

Body Styling and Fuel Tank Assembly

Ref.	Part Number	Qty.	Description
1	119-3338	1	Pod-RH
2	119-3337	1	Pod-LH
3	119-8872	1	Decal-Panel, Control
4	112-9752	1	Cable-Throttle
5	3258-166	3	Screw-PRH
6	107069	3	Clip
7	120-5461	1	Cap-Fuel, Ratcheting
8	119-3377-03	1	Plate-Control
9	119-3324	1	Fuel Tank ASM
9:1	115-2564	1	Tube-Drop
9:2	46-6560	2	Bushing

Ref.	Part Number	Qty.	Description
10	112-4004	6	Screw-Shoulder
11	609830	2	Spring
12	112-9753	1	Cable-Choke
13	3253-21	1	Washer-Lock
14	3220-3	1	Nut-HJ
15	119-3304-03	1	Guard-Rear
16	99-4693	1	Decal
17	119-3395-03	1	Support-Tank, Front
18	32144-70	6	Screw-HWHTF
19	119-8814	1	Decal-Control Lever, LH
20	119-8815	1	Decal-Control Lever, RH

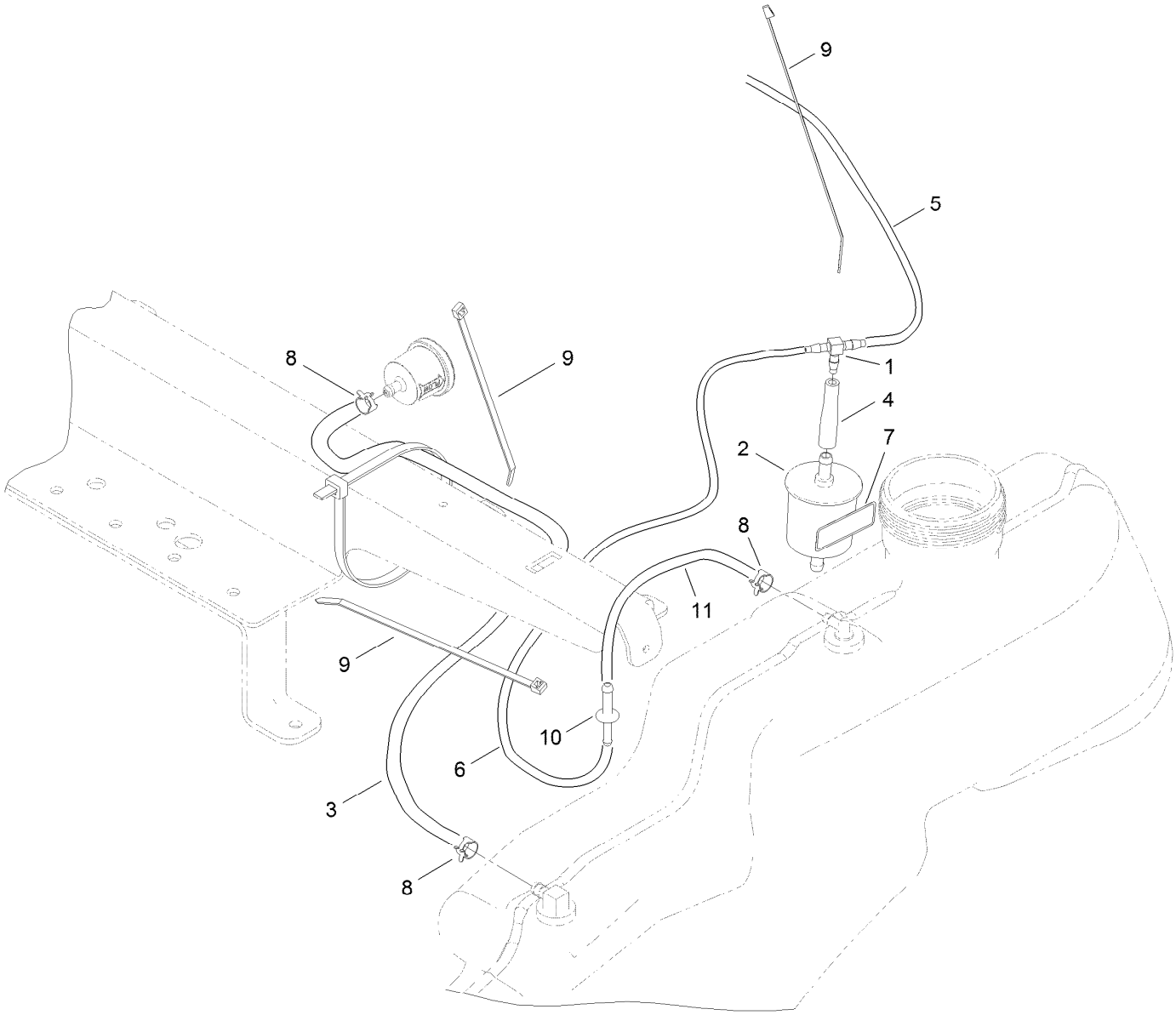

Fuel Delivery Assembly

Ref.	*Part Number*	*Qty.*	*Description*
1	120-2234	1	Fitting-Tee
2	120-2235	1	Filter-Air
3	110-5701	1	Hose-Fuel
4	120-2272	1	Hose-Fuel, Molded
5	119-8150	1	Hose-Fuel
6	119-8150	1	Hose-Fuel
7	116-4769	1	Decal-Filter, Emissions
8	2412-98	3	Clamp
9	614249	3	Strap-Tie
10	117-5399	1	Adaptor-Orifice
11	110-1876	1	Hose-Fuel

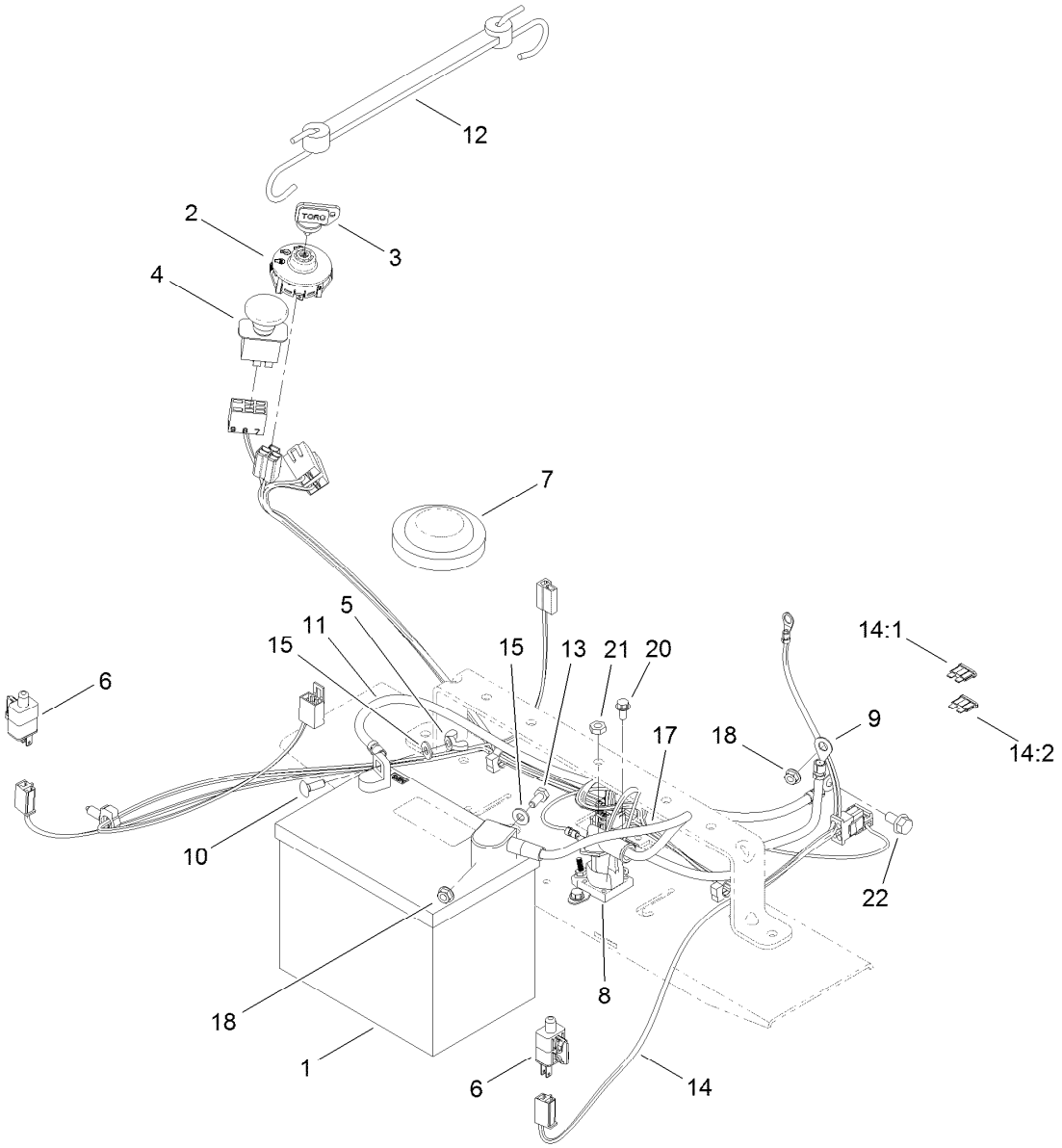

Battery and Electrical Assembly

Ref.	Part Number	Qty.	Description
1	104-2493	1	Battery
2	117-2221	1	Switch-Ignition
3	63-8360	1	Key-Ignition
4	93-9998	1	Switch-PTO
5	32103-22	1	Nut-Wing
6	110-6765	2	Switch-Single Pole No
7	100-3524	1	Switch-Seat
8	117-1197	1	Solenoid
9	119-8898	1	Cable-Battery, Red
10	3229-1	1	Screw-CARR
11	119-8899	1	Cable-Battery, Black

Ref.	Part Number	Qty.	Description
12	104-2466	1	Holddown-Battery
13	321-3	1	Screw-HH
14	119-3343	1	Harness-Wire
14:1	109103	1	Fuse-Blade, 30 Amp
14:2	109102	1	Fuse-Blade, 25 Amp
15	3256-22	2	Washer-Flat
17	119-8897	1	Cable-Battery, Red
18	32128-33	2	Nut-HF
20	32144-4	2	Screw-HWH
21	3220-2	2	Nut-Jam
22	33104-016	1	Screw-HHF

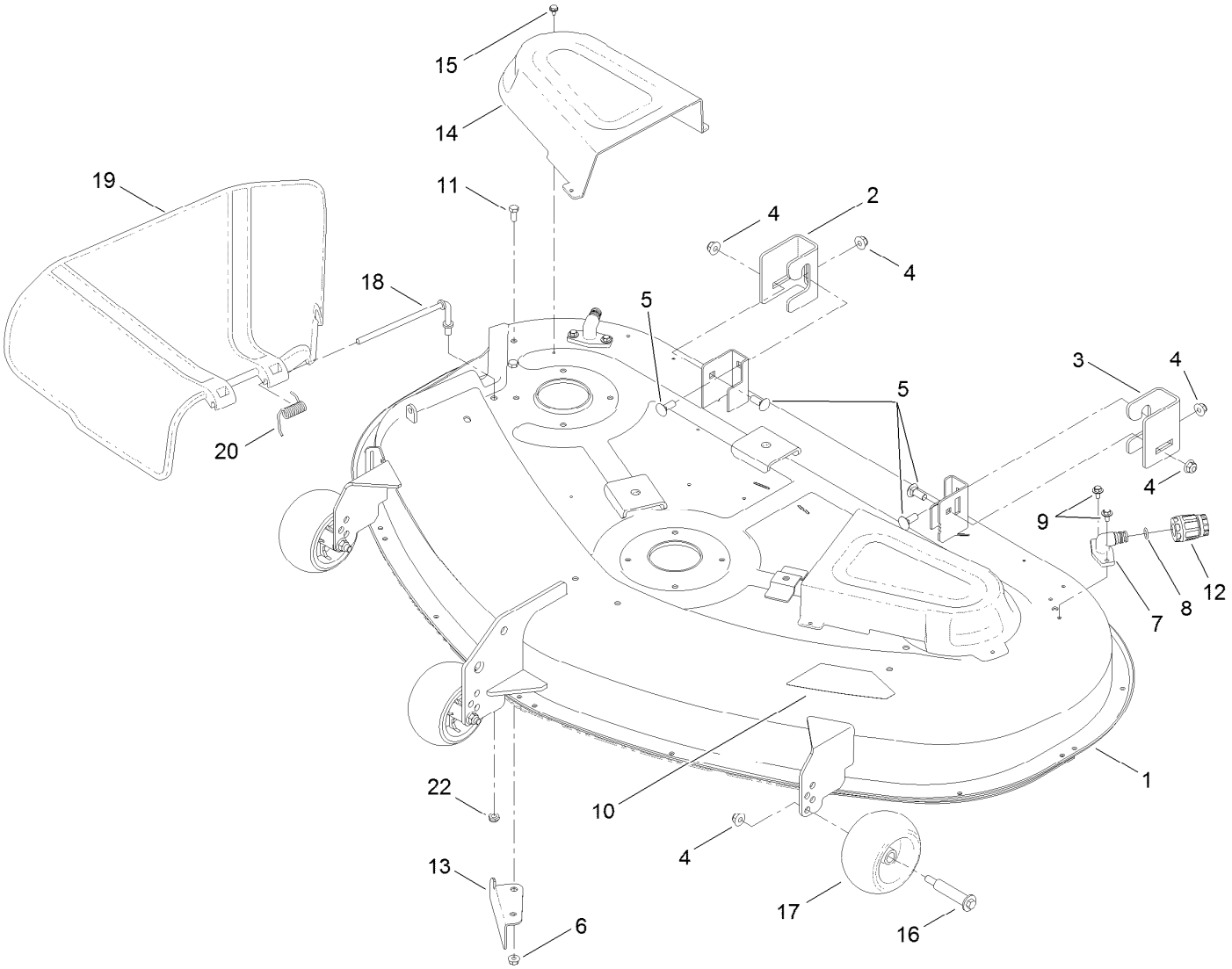

50 Inch Deck Assembly

Ref.	Part Number	Qty.	Description
1	119-8841	1	50 Inch Deck And Decal ASM
2	119-3494	1	Bracket-Hanger, RH
3	119-3496	1	Bracket-Hanger, Lr
4	104-8301	7	Nut-Flange, NI
5	3231-2	4	Screw-CARR
6	104-8300	2	Nut-Flange, NI
7	95-2747	2	Fitting-Washout
8	46-6290	2	O-Ring, Seal
9	46-8560	4	Screw-HHFTF
10	117-1223	1	Decal

Ref.	Part Number	Qty.	Description
11	322-3	2	Screw-HH
12	95-3270	1	Connector-Hose
13	112-3983-03	1	Baffle-Cutoff
14	108-7890	2	Cover-Belt
15	32104-76	6	Screw
16	112-3977	3	Bolt-Shoulder
17	1-603299	3	Roller-Scalp, Anti
18	112-3950	1	Rod-Pivot
19	108-7895	1	Deflector
20	110-6694	1	Spring-Torsion
22	3296-59	1	Nut-Lock, NI

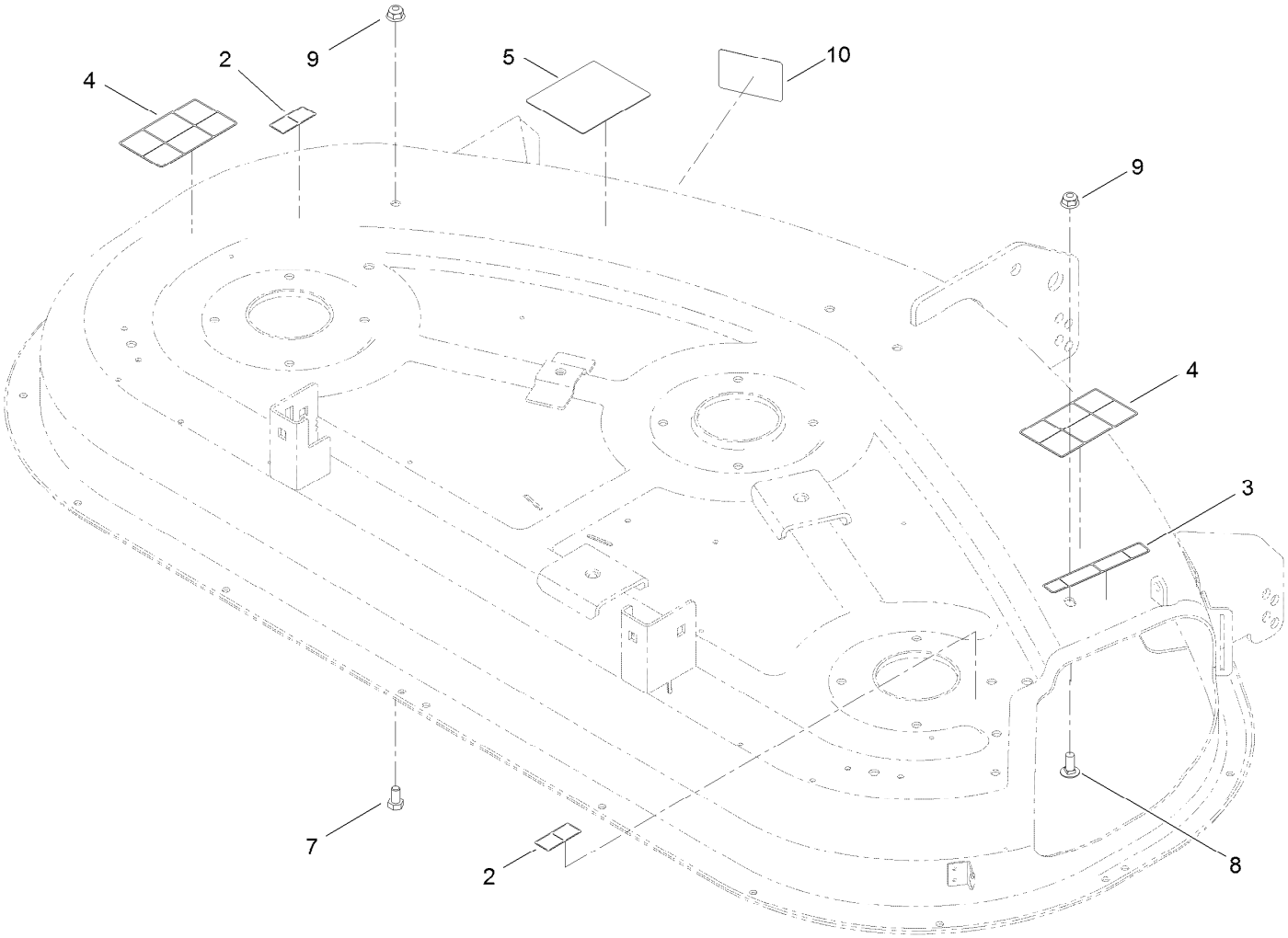

50 Inch Deck Decal Assembly No. 119-8841

Ref.	*Part Number*	*Qty.*	*Description*
2	114-1606	2	Decal-Danger, Pulley
3	93-7009	1	Decal-Danger, Deflector
4	110-6691	2	Decal-Danger
5	99-3943	1	Decal-Routing, Belt
7	322-2	1	Screw-HH
8	3230-23	1	Screw-CARR
9	104-8300	2	Nut-Flange, NI
10	112-9840	1	Decal-Scalp, Anti

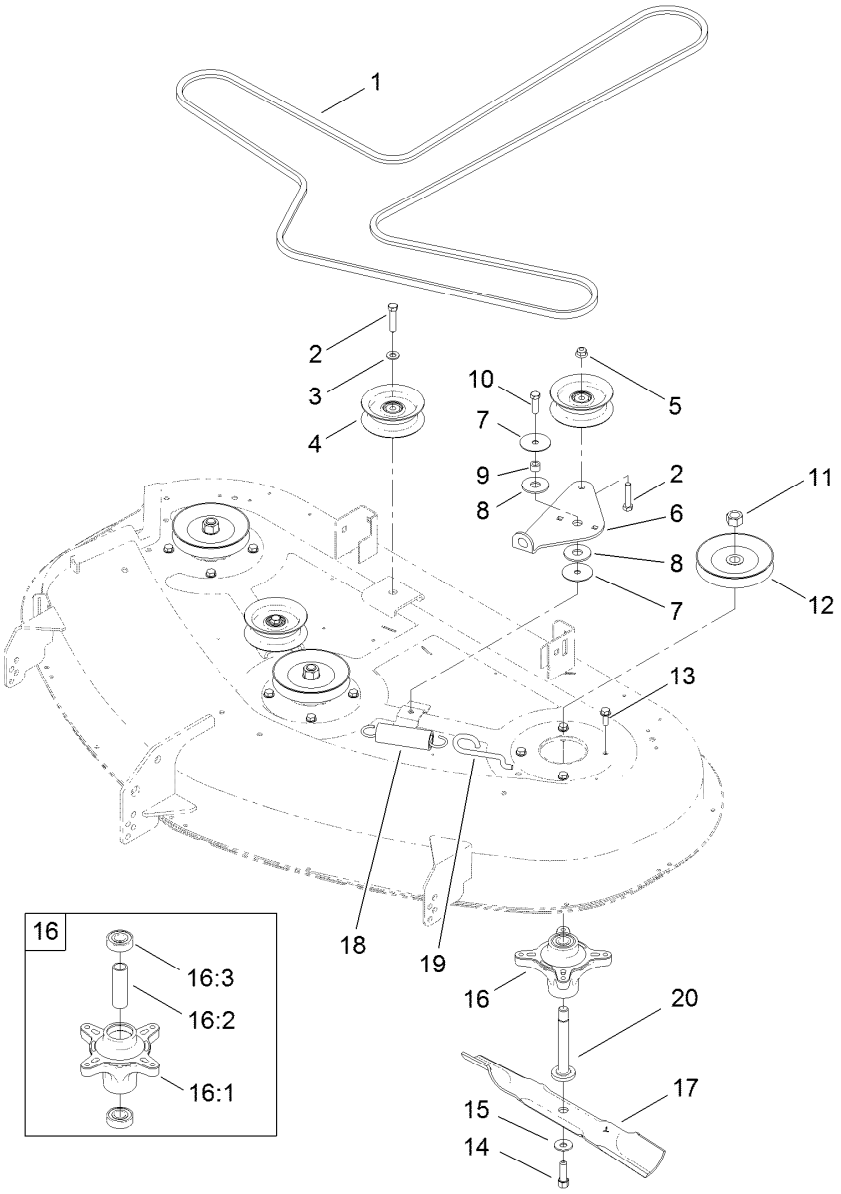

50 Inch Deck Belt, Spindle and Hi-Lift Blade Assembly

Ref.	Part Number	Qty.	Description
1	119-8820	1	V-Belt
2	323-9	3	Screw-HH
3	3256-24	2	Washer-Flat
4	106-2175	3	Pulley-Idler, Flat
5	104-8301	1	Nut-Flange, NI
6	114-8540	1	Arm-Idler
7	120-2229	2	Washer-Idler Pivot
8	114-0463	2	Washer-Friction, Composite
9	115-4986	1	Spacer
10	323-7	1	Screw-HH
11	3219-6	3	Nut-Hex
12	110-6865	3	Pulley

Ref.	Part Number	Qty.	Description
13	32144-41	12	Screw-Taptite
14	26-0671	3	Screw-HH
15	3290-465	3	Washer-Belleville
16	117-7439	3	Spindle ASM
16:1	117-7267	1	Spindle
16:2	117-7269	1	Spacer
16:3	100-1048	2	Bearing-Ball
17	115-5059-03	3	Blade-Hi Lift, 17.50 Inch
18	1-603414	1	Spring-Extension
19	112-3973	1	Hook-Return, Spring
20	117-7268	3	Shaft-Spindle

Attachments and Accessories

For 74630 TimeCutter Z5060 Riding Mower

Product Name	Model/Part
Deck Ring Kit	114-1608
Armrest Kit	119-3307
Hourmeter Kit, 2011 and After TimeCutter Riding Mower	120-5498
Striping Kit, 42in and 50in Mowers for TimeCutter Z Riding Mower	120-7905
Foot Assist Deck Lift Kit, 2011 and After Zero-Turn-Radius Riding Mower	79010
Sunshade Kit, 2011 and After Zero-Turn-Radius Riding Mower	79011
Hitch Kit, Zero-Turn-Radius Riding Mower	79014
Replacement Blade Kit, 2007 and After TimeCutter Riding Mower with 50in Mower	79016
50in Recycler Kit, 2007 and After Riding Mower	79019
Floor Mat Kit, 2011 and After Zero-Turn-Radius Riding Mower with 50-inch Cutting Unit	79021
Storage Cover	79317
50in Bagger, 2011 and After TimeCutter 5000 Series Riding Mower	79335
10 cu. ft. Poly Dump Cart	79991

Notes:

TORO®

Count on it.