Form No. 3365-214 Rev C

TORO®

Count on it.

Operator's Manual

Multi-Pro® 5700-D Turf Sprayer

Model No. 41582—Serial No. 310000001 and Up

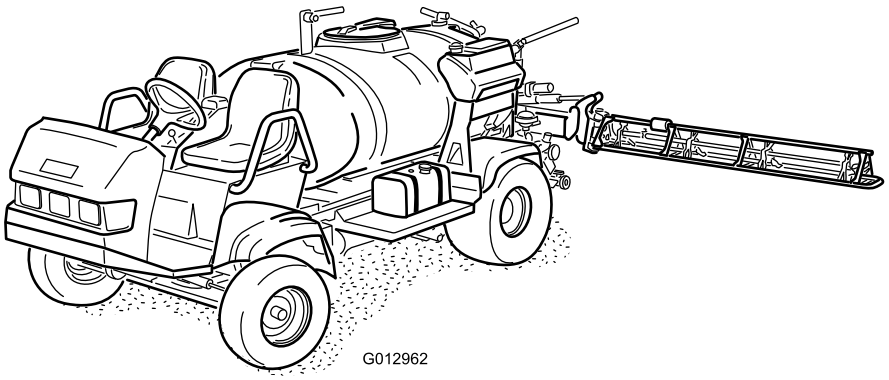

G012962

CE

To register your product or download an *Operator's Manual* or *Parts Catalog* at no charge, go to www.Toro.com.

Original Instructions (EN)

The Multi-Pro® turf sprayer is a dedicated turf spray application vehicle and is intended to be used by professional, hired operators in commercial applications. It is primarily designed for spraying on well-maintained lawns in parks, golf courses, sports fields, and on commercial grounds.

This product complies with all relevant European directives, for details please see the separate product specific Declaration of Conformity (DOC) sheet.

WARNING

CALIFORNIA
Proposition 65 Warning

The engine exhaust from this product contains chemicals known to the State of California to cause cancer, birth defects, or other reproductive harm.

Important: This engine is not equipped with a spark arrester muffler. It is a violation of California Public Resource Code Section 4442 to use or operate the engine on any forest-covered, brush-covered, or grass-covered land. Other states or federal areas may have similar laws.

This spark ignition system complies with Canadian ICES-002.

The enclosed *Engine Owner's Manual* is supplied for information regarding the US Environmental Protection Agency (EPA) and the California Emission Control Regulation of emission systems, maintenance, and warranty. Replacements may be ordered through the engine manufacturer.

Introduction

Read this manual carefully to learn how to operate and maintain your product properly. The information in this manual can help you and others avoid injury and product damage. Although Toro designs and produces safe products, you are responsible for operating the product properly and safely. You may contact Toro directly at www.Toro.com for product and accessory information, help finding a dealer, or to register your product.

Whenever you need service, genuine Toro parts, or additional information, contact an Authorized Service Dealer or Toro Customer Service and have the model and serial numbers of your product ready. Figure 1 illustrates the location of the model and serial numbers on the product.

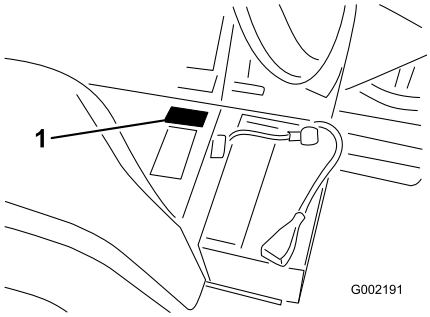

Figure 1

1. Location of the model and serial numbers

Model No. _____

Serial No. _____

This manual identifies potential hazards and has safety messages identified by the safety alert symbol (Figure 2), which signals a hazard that may cause serious injury or death if you do not follow the recommended precautions.



Figure 2

1. Safety alert symbol.

This manual uses two other words to highlight information. **Important** calls attention to special mechanical information and **Note** emphasizes general information worthy of special attention.

Contents

Introduction 2
Safety 4
- Safe Operating Practices 4
- Chemical Safety 4
- Before Operating 5
- While Operating 5
- Maintenance 7
- Sound Power 7
- Sound Pressure 7
- Hand-Arm Vibration 7
- Whole Body Vibration 7
- Safety and Instructional Decals 8

Setup 12
- 1 Checking the Boom Hinge Springs 12
- 2 Learning more about your product. 13

© 2010—The Toro® Company
8111 Lyndale Avenue South
Bloomington, MN 55420

Contact us at www.Toro.com.
Printed in the USA.
All Rights Reserved

Product Overview 14
Controls 15
Specifications 19
Operation 19
Think Safety First 19
Before Driving the Sprayer for the First Time 19
Pre-Starting Checks 21
Driving the Sprayer 22
New Sprayer Break-In 22
Operating the Sprayer 23
Filling the Fresh Water Tank 23
Filling the Spray Tank 23
Operating the Booms 24
Spraying 24
Turf Care Precautions While Operating in Stationary Modes 25
Spraying Tips 25
Unclogging a Nozzle 25
Selecting a Nozzle 25
Cleaning the Sprayer 25
Calibrating the Boom Bypass Valves 26
Pump 27
Transporting the Sprayer 27
Towing the Sprayer 28
Maintenance 29
Recommended Maintenance Schedule(s) 29
Daily Maintenance Checklist 30
Notation for Areas of Concern 31
Premaintenance Procedures 31
Jacking the Sprayer 31
Lubrication 32
Greasing the Sprayer 32
Greasing the Boom Hinges 33
Greasing the Actuator Rod Bearings 33
Engine Maintenance 35
Servicing the Air Cleaner 35
Servicing the Engine Oil 35
Fuel System Maintenance 37
Checking the Fuel Line and Connections 37
Bleeding the Fuel System 37
Bleeding Air from the Injectors 38
Draining the Fuel Tank 38
Servicing the Fuel Filters 39
Electrical System Maintenance 40
Replacing the Fuses 40
Servicing the Battery 40
Drive System Maintenance 42
Check the Tire Pressure 42
Inspecting the Wheels/Tires 42
Changing the Planetary Gearbox Fluid 42
Adjusting the Front Wheel Toe-In 43
Cooling System Maintenance 44
Checking the Coolant Level 44
Servicing the Cooling System 44
Brake Maintenance 46
Checking the Brakes 46
Adjusting the Brakes 46
Belt Maintenance 47
Servicing the Drive Belts 47
Hydraulic System Maintenance 47
Checking the Hydraulic Fluid 47
Servicing the Hydraulic Oil 48
Spray System Maintenance 50
Inspecting the Hoses 50
Pump Maintenance 50
Adjusting the Boom Actuator 50
Emergency Manual Operation of the Boom Actuators 51
Inspecting the Nylon Pivot Bushings 51
Cleaning 52
Cleaning the Suction Strainer 52
Storage 53
Troubleshooting 54
Schematics 57

Safety

Improper use or maintenance by the operator or owner can result in injury. To reduce the potential for injury, comply with these safety instructions and always pay attention to the safety alert symbol, which means CAUTION, WARNING, or DANGER-"personal safety instruction." Failure to comply with the instruction may result in personal injury or death.

Supervisors, operators, and service persons should be familiar with the following standards and publications: (The material may be obtained from the address shown).

- Flammable and Combustible Liquids Code: ANSI/NFPA 30
- National Fire Protection Association: ANSI/NFPA #505; Powered Industrial Trucks National Fire Prevention Association Barrymarch Park Quincy, Massachusetts 02269 U.S.A.
- SAE J2258 Light Utility Vehicle SAE International 400 Commonwealth Drive, Warrendale, PA 15096-0001, U.S.A.
- ANSI/UL 558; Internal Combustion Engine Powered Industrial Trucks American National Standards Institute, Inc. 1430 Broadway New York, New York 10018 U.S.A. or Underwriters Laboratories 333 Pfingsten Road Northbrook, Illinois 60062 U.S.A.

Safe Operating Practices

⚠ WARNING

The sprayer is an off-highway vehicle only and is not designed, equipped, or manufactured for use on public streets, roads, or highways.

Supervisor's Responsibilities

- Make sure that operators are thoroughly trained and familiar with the *Operator's Manual*, Engine Manual, and all labels on the sprayer.
- Establish your own special procedures and work rules for unusual operating conditions (e.g. slopes too steep for sprayer operation).

Chemical Safety

⚠ WARNING

Chemical substances used in the spray system may be hazardous and toxic to you, bystanders, animals, plants, soils or other property.

- **Carefully read and follow the chemical warning labels and Material Safety Data Sheets (MSDS) for all chemicals used and protect yourself according to the chemical manufacturer's recommendations. For example, use appropriate Personal Protective Equipment (PPE) including face and eye protection, gloves, or other equipment to guard against personal contact with the chemical.**
- **Keep in mind that there may be more than one chemical used and information on each should be assessed.**
- ***Refuse to operate or work on the sprayer if this information is not available!***
- **Before working on a spray system make sure the system has been triple rinsed and neutralized according to the recommendations of the chemical manufacturer(s).**
- **Verify there is an adequate supply of clean water and soap nearby, and immediately wash off any chemicals that contact you.**
- Obtain proper training before using or handling chemicals.
- Use the correct chemical for the job.
- Follow the chemical manufacturer's instructions for the safe application of the chemical.
- Handle chemicals in a well ventilated area.
- Wear goggles and other protective equipment as instructed by the chemical manufacturer. Ensure that as little skin as possible is exposed while using chemicals.
- Have clean water available especially when filling the spray tank.
- Do not eat, drink, or smoke while working with chemicals.
- Always wash your hands and other exposed areas as soon as possible after finishing the work.
- Properly dispose of unused chemicals and chemical containers as instructed by the chemical manufacturer and your local codes.
- Chemicals and fumes in the tanks are dangerous; never enter the tank or place your head over or in the opening.

Before Operating

- Operate the machine only after reading and understanding the contents of this manual.
- **Never** allow children to operate the sprayer.
- **Never** allow other adults to operate the sprayer without first reading and understanding the *Operator's Manual*. Only trained and authorized persons should operate this sprayer. Make sure that all operators are physically and mentally capable of operating the sprayer.
- This sprayer is designed to carry **only you**, the operator and **one passenger** in the seat provided by the manufacturer. **Never** carry any passengers on the sprayer.
- **Never** operate the sprayer when under the influence of drugs or alcohol. Even prescription drugs and cold medicines can cause drowsiness.
- Do not drive the sprayer when you are tired. Be sure to take occasional breaks. It is very important that you stay alert at all times.
- Become familiar with the controls and know how to stop the engine quickly.
- Keep all shields, safety devices, and decals in place. If a shield, safety device, or decal is malfunctioning, illegible, or damaged, repair or replace it before operating the machine.
- Always wear substantial shoes. Do not operate the machine while wearing sandals, tennis shoes, or sneakers. Do not wear loose fitting clothing or jewelry which could get caught in moving parts and cause personal injury.
- Wearing safety glasses, safety shoes, long pants, and a helmet is advisable and required by some local safety and insurance regulations.
- Avoid driving when it is dark, especially in unfamiliar areas. If you must drive when it is dark, be sure to drive cautiously, use the headlights, and even consider adding additional lights.
- Be extremely careful when operating around people. Always be aware of where bystanders might be and keep them away from the work area.
- Before operating the sprayer, always check the designated areas of the sprayer that are stated in the Pre-Starting Checks in the Operation section. If the machine does not function correctly or is damaged in any way, do **not** use the sprayer. Make sure that the problem is corrected before the sprayer or attachment is operated.
- Ensure that all fluid line connectors are tight and all hoses are in good condition before applying pressure to the system.
- Since gasoline is highly flammable, handle it carefully.
  - Use an approved gasoline container.
  - Do not remove the cap from the fuel tank when the engine is hot or running.
  - Do not smoke while handling gasoline.
  - Fill the fuel tank outdoors, and fill it to about 1 inch (25 mm) below the top of the tank (the bottom of the filler neck). Do not overfill it.
  - Wipe up any spilled gasoline.

While Operating

⚠ WARNING

Engine exhaust contains carbon monoxide, which is an odorless, deadly poison that can kill you.

Do not run engine indoors or in an enclosed area.

- The operator should remain seated whenever the sprayer is in motion. The operator should keep both hands on the steering wheel whenever possible. Keep your arms and legs within the sprayer body at all times.
- Always watch out for and avoid low overhangs such as tree limbs, door jambs, and overhead walkways. Make sure there is enough room over head to easily clear the sprayer and your head.
- Failure to operate the sprayer safely may result in an accident, tip over of the sprayer, and serious injury or death. Drive carefully. To prevent tipping or loss of control:
  - Use extreme caution, reduce speed, and maintain a safe distance around sand traps, ditches, creeks, ramps, unfamiliar areas, or any areas that have abrupt changes in ground conditions or elevation.
  - Watch for holes or other hidden hazards.
  - Use extra caution when operating the sprayer on wet surfaces, in adverse weather conditions, at higher speeds, or with a full load. Stopping time and distance will increase with a full load.
  - Avoid sudden stops and starts. Do not go from reverse to forward or forward to reverse without first coming to a complete stop.
  - Slow down before turning. Do not attempt sharp turns or abrupt maneuvers or other unsafe driving actions that may cause a loss of sprayer control.

– Before backing up, look to the rear and ensure that no one is behind you. Back up slowly.

– Watch out for traffic when you are near or crossing roads. Always yield the right of way to pedestrians and other vehicles. This sprayer is **not** designed for use on streets or highways. Always signal your turns or stop early enough so that other people know what you plan to do. Obey all traffic rules and regulations.

– The electrical and exhaust systems of the sprayer can produce sparks capable of igniting explosive materials. Never operate the sprayer in or near an area where there is dust or fumes in the air which are explosive.

– If you are ever unsure about safe operation, **stop work** and ask your supervisor.

- Do not touch the engine or muffler while the engine is running or soon after it has stopped. These areas may be hot enough to cause burns.
- If the machine ever vibrates abnormally, stop immediately, wait for all motion to stop, and inspect the sprayer for damage. Repair all damage before resuming operation.
- Before getting off of the seat:
  1. Stop the movement of the machine.
  2. Place the range selector in Neutral and set the parking brake.
  3. Turn the ignition key to Off.
  4. Remove the ignition key.

  Important: Do not park the machine on an incline.
- Lightning can cause severe injury or death. If lightning is seen or thunder is heard in the area, do not operate the machine; seek shelter.

Braking

- Slow down before you approach an obstacle. This gives you extra time to stop or turn away. Hitting an obstacle can damage the sprayer and its contents. More important, it can injure you.
- Gross Vehicle Weight (GVW) has a major impact on your ability to stop and/or turn. Heavy loads and attachments make a sprayer harder to stop or turn. The heavier the load, the longer it takes to stop.
- Turf and pavement are much more slippery when they are wet. It can take 2 to 4 times as long to stop on wet surfaces as on dry surfaces. If you drive through standing water deep enough to get the brakes wet, they will not work well until they are dry. After driving through water, you should test the brakes to make sure they work properly. If they do not, drive slowly while putting light pressure on the brake pedal. This will dry the brakes out.

Operating on Hills and Rough Terrain

Operating the sprayer on a hill may cause tipping or rolling of the sprayer, or the engine may stall and you could lose headway on the hill. This could result in personal injury.

- Do not accelerate quickly or slam on the brakes when backing down a hill, especially with a load.
- Never drive across a steep hill; always drive straight up or down or go around the hill.
- If the engine stalls or you begin to lose headway while climbing a hill, gradually apply the brakes and slowly back straight down the hill.
- Turning while traveling up or down hills can be dangerous. If you have to turn while on a hill, do it slowly and cautiously. Never make sharp or fast turns.
- Heavy loads affect stability. Reduce the weight of the load and your speed when operating on hills.
- Avoid stopping on hills, especially with a load. Stopping while going down a hill will take longer than stopping on level ground. If the sprayer must be stopped, avoid sudden speed changes, which may initiate tipping or rolling of the sprayer. Do not slam on the brakes when rolling backward, as this may cause the sprayer to overturn.
- The Toro Company strongly recommends installing the optional ROPS Kit when operating on hilly terrain. If you install a ROPS, always wear the seat belt when driving the sprayer.
- Reduce speed and load when operating on rough terrain, uneven ground, and near curbs, holes, and other sudden changes in terrain. Loads may shift, causing the sprayer to become unstable.

⚠ WARNING

Sudden changes in terrain may cause abrupt steering wheel movement, possibly resulting in hand and arm injuries.

- Reduce your speed when operating on rough terrain and near curbs.
- Grip the steering wheel loosely around the perimeter. Keep your hands clear of the steering wheel spokes.

Loading

The weight of the cargo can change the sprayer center of gravity and sprayer handling. To avoid loss of control and personal injury, follow these guidelines:

- Reduce the weight of the load when operating on hills and rough terrain to avoid tipping or overturning of the sprayer.
- Liquid loads can shift. This shifting happens most often while turning, going up or down hills, suddenly changing speeds, or while driving over rough surfaces. Shifting loads can cause the sprayer to tip over.
- When operating with a heavy load, reduce your speed and allow for sufficient braking distance. Do not suddenly apply the brakes. Use extra caution on slopes.
- Be aware that heavy loads increase your stopping distance and reduce your ability to turn quickly without tipping over.

Maintenance

- Only permit qualified and authorized personnel to maintain, repair, adjust, or inspect the sprayer.
- Before performing any maintenance, ensure that the system has been thoroughly rinsed and cleaned.
- Before servicing or making adjustments to the machine, stop the engine, set the parking brake, and remove the key from the ignition to prevent someone from accidentally starting the engine.
- To make sure that the entire machine is in good condition, keep all nuts, bolts, and screws properly tightened.
- To reduce the potential for fire, keep the engine area free of excessive grease, grass, leaves, and accumulation of dirt.
- Never use an open flame to check the level or leakage of fuel or battery electrolyte.
- If the engine must be running to perform a maintenance adjustment, keep your hands, feet, clothing, and any parts of your body away from the engine and any moving parts. Keep everyone away.
- Do not use open pans of fuel or flammable cleaning fluids when cleaning parts.
- **Do not adjust** the traction control speed. To ensure safety and accuracy, have an Authorized Toro Distributor check the ground speed.
- Keep your body and hands away from pin hole leaks or nozzles that eject high pressure fluid. Use cardboard or paper to find leaks. Fluid escaping under pressure can penetrate skin and cause injury requiring surgery within a few hours by a qualified surgeon or gangrene may result.
- If major repairs are ever needed or assistance is required, contact an Authorized Toro Distributor.
- To be sure of optimum performance and safety, always purchase genuine Toro replacement parts and accessories. Replacement parts and accessories made by other manufacturers could be dangerous. Altering this sprayer in any manner that may affect sprayer operation, performance, durability, or its use, may result in injury or death. Such use could void the product warranty.

Sound Power

This unit has a guaranteed sound power level of N/A dBA, which includes an Uncertainty Value (K) of N/A dBA.

Sound power level was determined according to the procedures outlined in ISO 11094.

Sound Pressure

This unit has a sound pressure level at the operator's ear of 90 dBA, which includes an Uncertainty Value (K) of 1 dBA.

Sound pressure level was determined according to the procedures outlined in EN ISO 11201.

Hand-Arm Vibration

Measured vibration level for right hand = 0.07 m/s^2

Measured vibration level for left hand = 0.12 m/s^2

Uncertainty Value (K) = 0.5 m/s^2

Measured values were determined according to the procedures outlined in EN 1032.

Whole Body Vibration

Measured vibration level = 0.3 m/s^2

Uncertainty Value (K) = 0.5 m/s^2

Measured values were determined according to the procedures outlined in EN 1032.

Safety and Instructional Decals

Safety decals and instructions are easily visible to the operator and are located near any area of potential danger. Replace any decal that is damaged or lost.

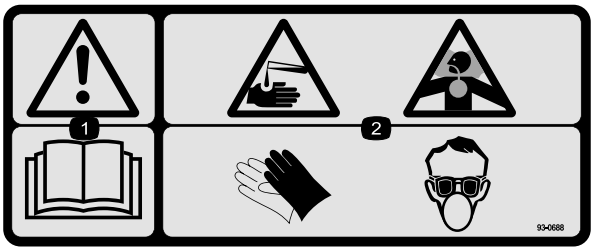

93-0688

1. Warning—read the *Operator's Manual*.
2. Caustic liquid/chemical burn and toxic gas inhalation hazards—wear hand, skin, eye, and respiratory protection.

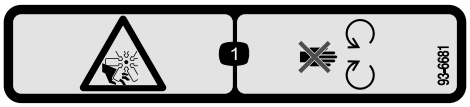

93-6681

1. Cutting/dismemberment—hazard, fan-stay away from moving parts.



93-6687

1. Do not step here.

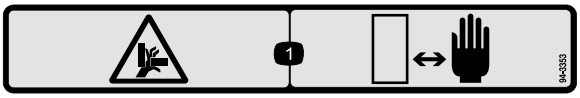

94-3353

Model 03207 only

1. Crushing hazard of hand—keep your hands a safe distance away.

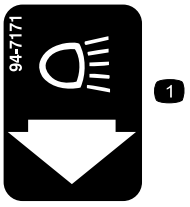

94-7171

1. Lights

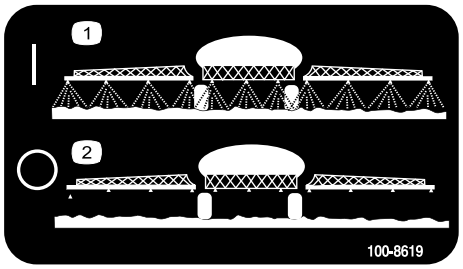

100-8619

1. Spray on
2. Spray off



104-7628

1. Read the *Operator's Manual*.

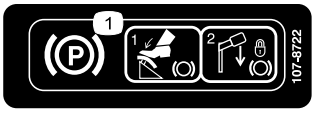

107-8722

1. To set the parking brake, press the brake, move the parking break lever to the locked position.

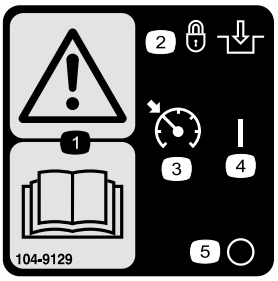

104-9129

1. Warning—read the *Operator's Manual*.
2. Lock and engage
3. Cruise control
4. On
5. Off

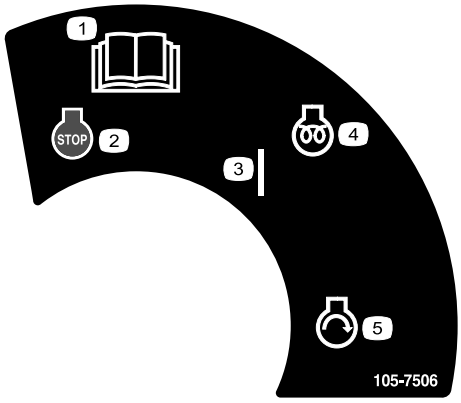

105-7506

1. Read the *Operator's Manual.*
2. Engine—stop
3. On
4. Engine—preheat
5. Engine—start



106-1355

1. Warning—do not enter the tank.



106-5016

1. Warning—read the *Operator's Manual*.
2. Electric shock hazard, overhead power lines—stay away from overhead power lines.
3. Crushing hazard, boom—keep bystanders a safe distance from the machine.

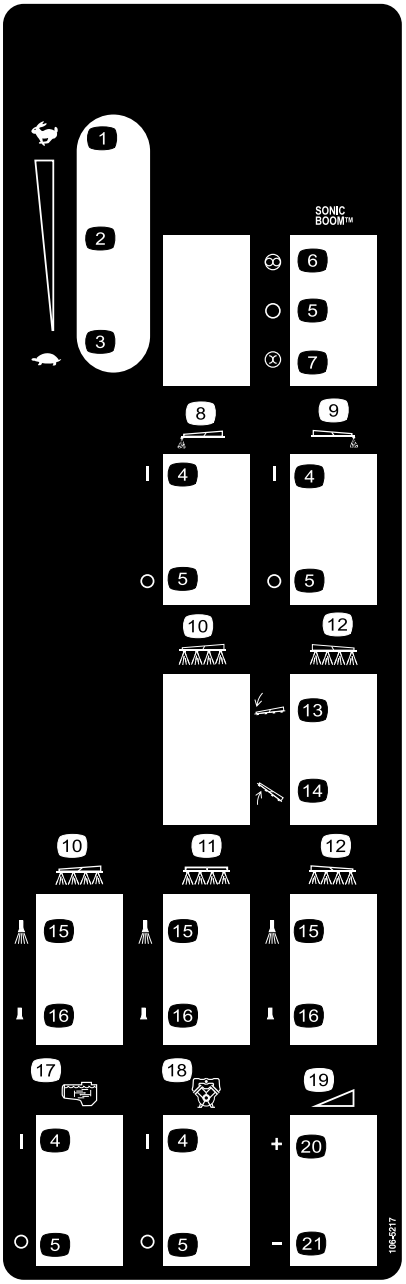

106-5217

1. Fast
2. Continuous variable setting
3. Slow
4. On
5. Off
6. Automatic
7. Manual
8. Left boom foam marker
9. Right boom foam marker
10. Left boom
11. Center boom
12. Right boom
13. Lower the boom.
14. Raise the boom.
15. Spray on
16. Spray off
17. Agitation
18. Pump
19. Continuous variable setting, spray pressure
20. Increase
21. Decrease



106-5517

1. Warning—do not touch the hot surface.

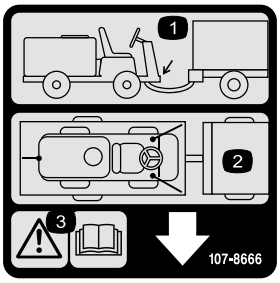

107-8666

1. Tow hitch location
2. Tie down locations
3. Warning—Read the *Operator's Manual.*

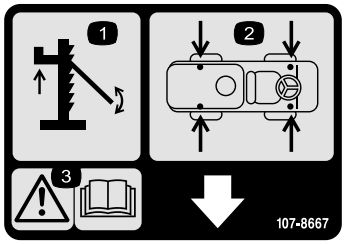

107-8667

1. Jacking
2. Jack point locations
3. Warning—Read the *Operator's Manual* for more information on jacking the vehicle

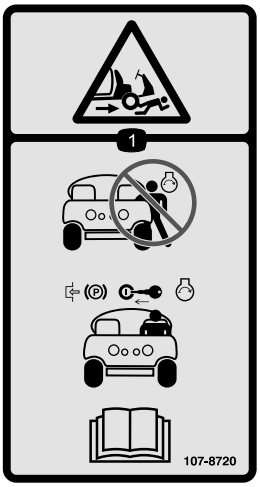

107-8720

1. Crushing/dismemberment hazard—do not start the engine while entering or exiting the vehicle; engage the parking brake, insert the key, and start the engine while seated in the drivers seat; read the *Operator's Manual.*

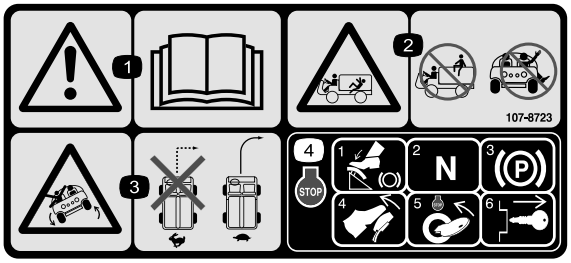

107-8723

1. Warning—read the *Operator's Manual.*
2. Falling, Crushing hazard—no riders on tank; keep arms and legs inside of the vehicle at all times.
3. Tipping hazard—do not turn sharply while traveling fast; drive slowly when turning.
4. To stop the engine, press the brake, put the gear selector in neutral, set the parking brake, release the brake, stop the engine, and remove the key.



114-9576

1. Pinch point, hand—keep hand away from hinge.

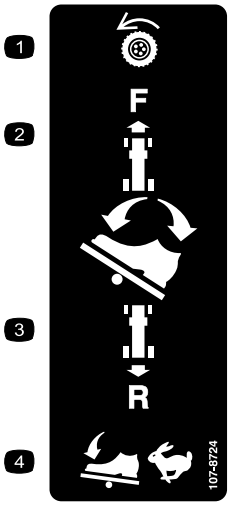

107-8724

1. Traction drive
2. To drive forward, press the top of the traction pedal forward and down.
3. To drive in reverse, press the bottom of the pedal rearward and down.
4. Vehicle speed increases with more pedal pressure.

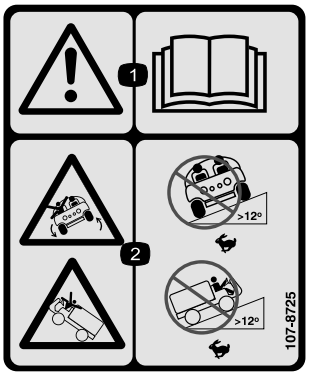

107-8725

1. Warning—read the *Operator's Manual.*
2. Tipping hazard—do not drive fast across slopes greater than 12 degrees; do not drive fast up slopes greater than 12 degrees.

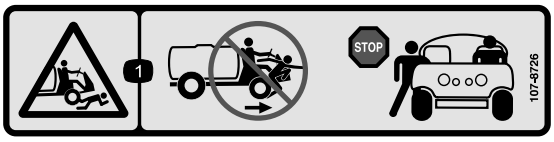

107-8726

1. Crushing/dismemberment hazard of bystanders—do not exit or enter the machine while it is moving; stop the machine before entering or exiting.

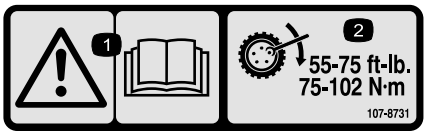

107-8731

1. Warning—read the *Operator's Manual.*
2. Torque lug nuts to 55-75 ft-lb (75-102 N-m).

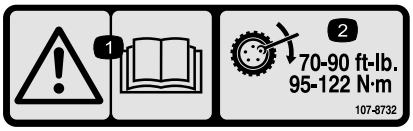

107-8732

1. Warning—read the *Operator's Manual.*
2. Torque lug nuts to 75-90 ft-lb (95-122 N-m).

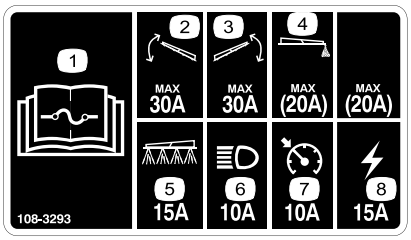

108-3293

1. Read the *Operator's Manual* for information on fuses.
2. 30 amp. fuse for the boom lift, left
3. 30 amp. fuse for the boom lift, right
4. 20 amp. fuse for the foam marker
5. 15 amp. fuse for the spray system
6. 10 amp. fuse for the headlights
7. 10 amp. fuse for the cruise control
8. 15 amp. fuse for the ignition

Setup

Loose Parts

Use the chart below to verify that all parts have been shipped.

Procedure	Description	Qty.	Use
1	No parts required	–	Check the boom hinge springs.
2	Ignition key Operator's Manual Engine Operator's Manual Parts Catalog Operator Training Material Registration Card Pre-delivery Inspection Sheet	2 1 1 1 1 1 1	Read the manuals and watch the training materials before operating the machine.

Note: Determine the left and right sides of the machine from the normal operating position.

Important: To use the sprayer, *you must obtain and install nozzles.* Contact your Authorized Toro Distributor for information on the available boom kits and accessories. After you install your nozzles and before using the sprayer for the first time (if you *do not* use Pro Control™ Spray System), adjust the boom bypass valves so that the pressure and application rate remains the same for all booms when you turn one or more booms off. Refer to Calibrating the Boom Bypass Valves section in the Operation section.

1

Checking the Boom Hinge Springs

No Parts Required

Procedure

Important: Operating the spray system with the boom hinge springs under the incorrect compression could damage the boom assembly. Measure the springs and use the jam nut to compress the springs to 1.56 inches if necessary.

The spray is shipped with the boom extensions swung forward to facilitate packaging of the machine. The springs are not fully tightened at the time of manufacture to allow the booms to be in this position for transit. Before operating the machine, the springs must be adjusted to the correct compression.

1. If necessary, remove the packing components that secure the right and left extension booms during shipping.
2. Support the booms while they are extended to the spray position.
3. At the boom hinge, measure the compression of the upper and lower springs while the booms are in their extended position (Figure 3).
   A. All springs must be compressed until the measure 1.56 inches.
   B. Use the jam nut to compress any spring that measure greater than 1.56 inches.

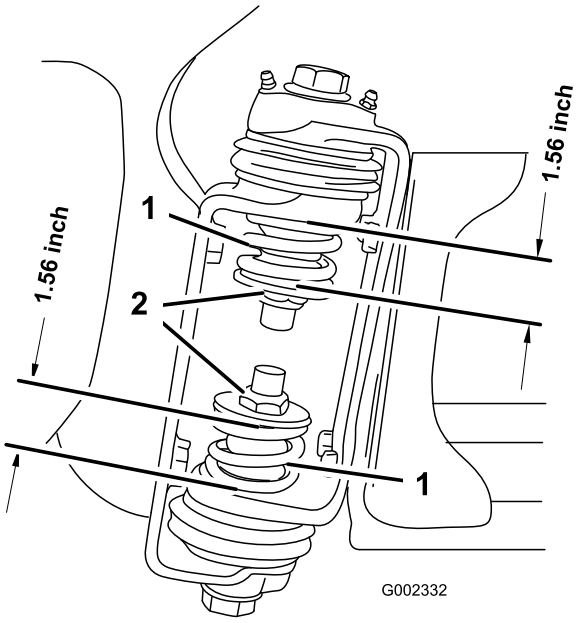

Figure 3

1. Boom hinge spring
2. Jam nut

4. Repeat the procedure for each spring on both boom hinges.
5. Move the booms into the transport "X" position. See Operating the Booms in the Operation section for more information.

2

Learning more about your product.

Parts needed for this procedure:

2	Ignition key
1	*Operator's Manual*
1	*Engine Operator's Manual*
1	*Parts Catalog*
1	Operator Training Material
1	Registration Card
1	Pre-delivery Inspection Sheet

Procedure

1. Read the manuals.
2. View the Operator training material.
3. Complete the registration card and return to Toro.
4. Store the documentation in a safe place.

Product Overview

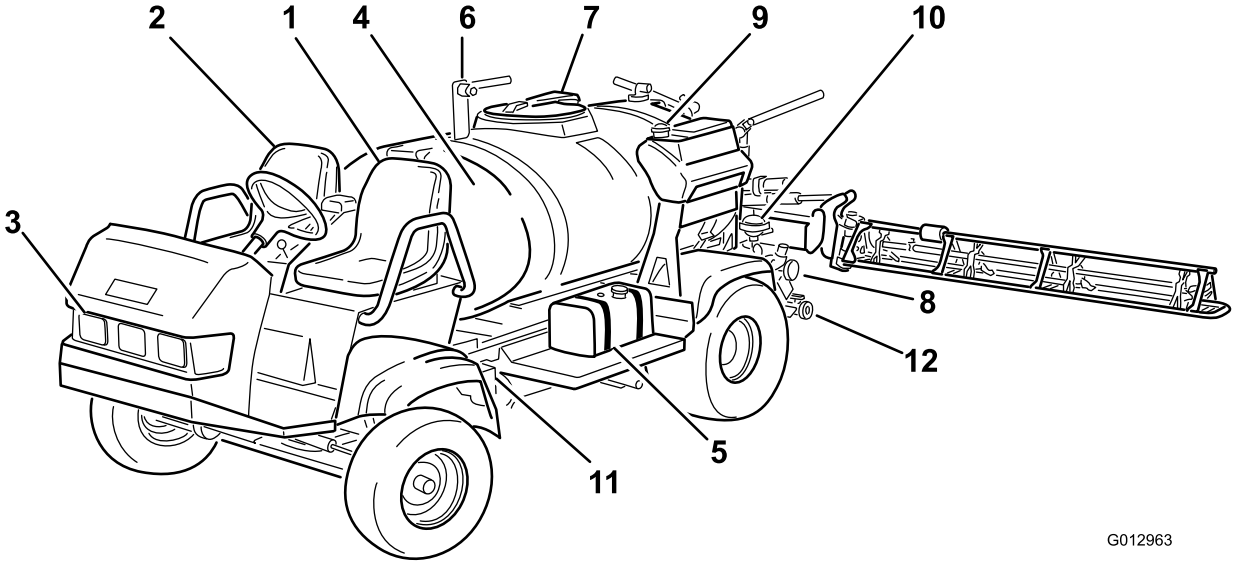

Figure 4

1. Operator's position
2. Passenger's position
3. Headlight
4. Chemical tank
5. Fuel tank
6. Anti-Siphon Receptacle
7. Tank lid
8. Pump
9. Fresh water tank
10. Pump pressure dampener
11. Battery
12. Tank drain

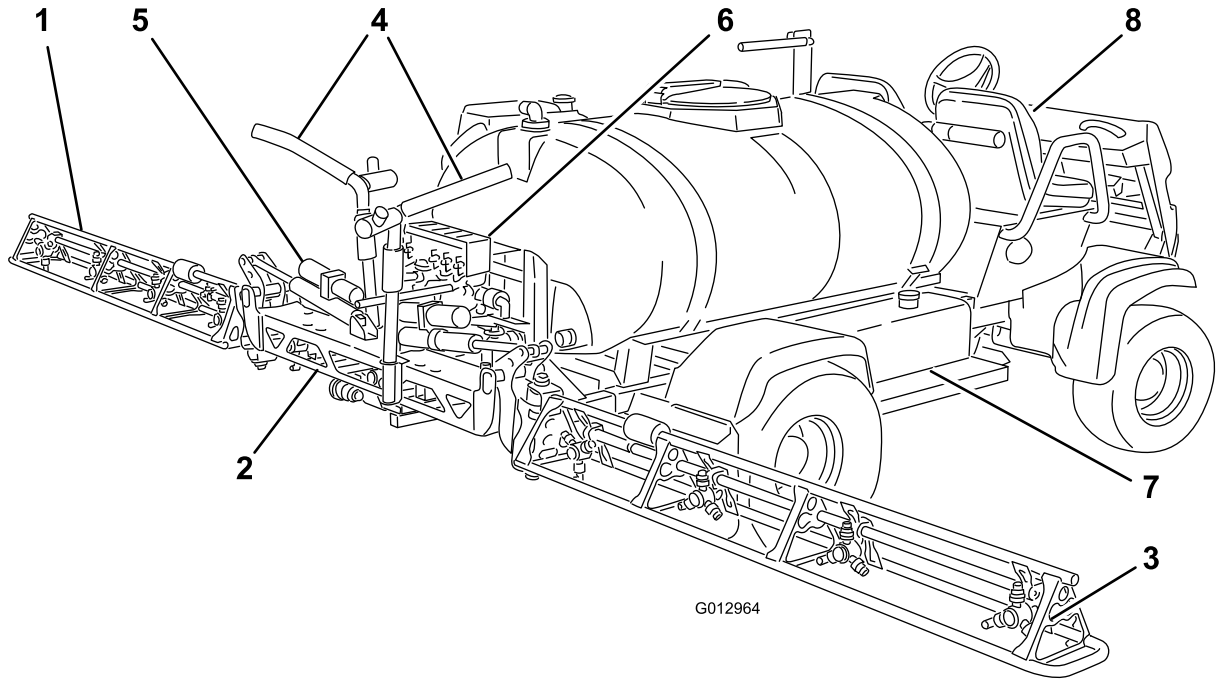

Figure 5

1. Left boom
2. Center boom
3. Right boom
4. Boom transport cradle
5. Boom control cylinder
6. Valve cluster
7. Hydraulic tank
8. Dash cluster

Controls

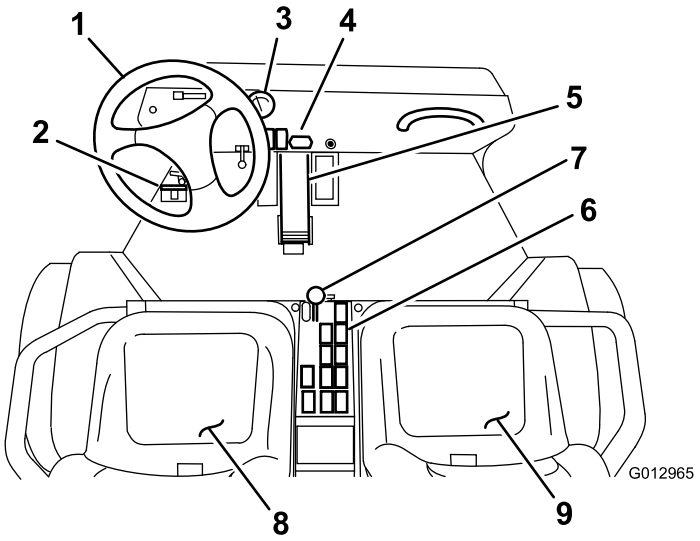

Figure 6

1. Steering wheel
2. Master boom foot switch
3. Pressure gauge
4. Dash controls
5. Traction pedal
6. Sprayer controls
7. Throttle lever
8. Operator's position
9. Passenger position

Traction Pedal

The traction pedal (Figure 7) controls the movement of the machine, both forward and reverse. Using the heel and toe of the right foot, press the top of the pedal to move forward or the bottom of the pedal to move in reverse. Release the pedal to slow and stop.

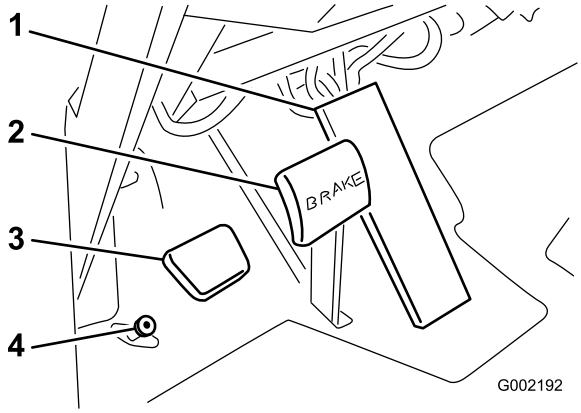

Figure 7

1. Traction pedal
2. Brake pedal
3. Parking brake pedal
4. Master boom switch

Important: Ensure that you allow the sprayer to come to a stop before switching between the Forward and Reverse position.

Note: The farther you press the pedal in either direction, the faster the sprayer will travel. To obtain maximum forward speed, set the throttle lever to the Fast position and press the traction pedal all the way forward.

Note: To obtain maximum power with a full tank or when traveling up a hill, set the throttle lever in the Fast position and drive slowly so that the engine remains at a high rpm.

Brake Pedal

Use the brake pedal to stop or slow the sprayer (Figure 7).

⚠ CAUTION

If you operate the sprayer with poorly adjusted or worn brakes, you could lose control of the sprayer, resulting in serious injury or death to you or bystanders.

Always check the brakes before operating the sprayer and keep them properly adjusted and repaired.

Parking Brake

The parking brake is a pedal to the left of the brake (Figure 7). Engage the parking brake whenever you plan on leaving the seat to prevent the sprayer from accidently moving. To engage the parking brake, press the brake pedal and, while holding the brake, press the parking brake pedal. To disengage, press and release the

brake pedal. If the sprayer is parked on a steep grade, apply the parking brake and place the blocks on the downhill side of the wheels.

Throttle Lever

The throttle lever, located on the control panel between the seats (Figure 8), controls the speed of the engine. Push the lever forward to increase the engine speed and pull it rearward to decrease the engine speed.

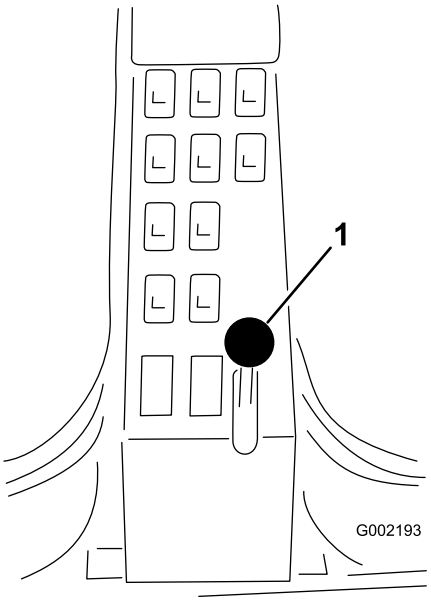

Figure 8

1. Throttle lever

Ignition Switch

The ignition switch (Figure 9) is used to start and stop the engine, has 3 positions: Off, On/Preheat and Start.

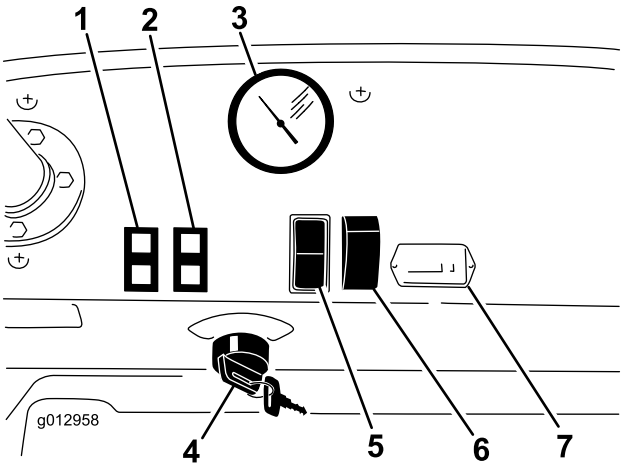

Figure 9

1. Water temperature and glow plug light
2. Oil pressure and battery light
3. Pressure gauge
4. Ignition switch
5. Traction pedal lock switch
6. Headlight switch
7. Hour meter

Pressure Gauge

The pressure gauge (Figure 9). is located on the dash. This gauge shows the pressure of the fluid in the system in psi and kPa.

Cruise Control Switch

The cruise control switch (Figure 9) locks the position of the traction pedal at the time the switch is engaged. This ensures the sprayer stays at a constant speed while driving on level ground.

Headlight Switch

Toggle the switch to operate the headlights (Figure 9). Push it forward to turn the lights on and rearward to turn them off.

Hour Meter

The hour meter (Figure 9) indicates the total number of hours the engine has run. The hour meter starts to function whenever the key is turned to the Run position.

Fuel Gauge

The fuel gauge is located on top of the fuel tank (Figure 10), on the left side of the machine and shows the amount of fuel in the tank.

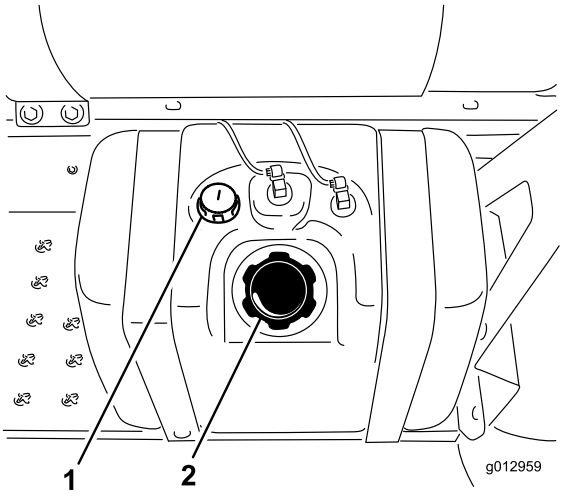

Figure 10

1. Fuel gauge
2. Fuel tank cap

Master Boom Switch

The master boom switch is located on the floor board of the machine cab and to the left of the operator. It allows you to start or stop the spray operation. Press the switch with your foot to enable or disable the spray system (Figure 11).

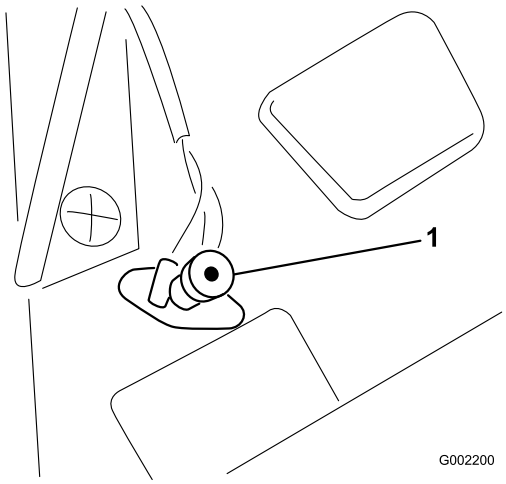

Figure 11

1. Master boom switch

Boom Switches

The boom switches are located on the control panel to the right of the seat (Figure 12). Toggle each switch forward to turn the corresponding boom section on and rearward to turn them off. When the switch is turned on, a light on the switch illuminates. These switches will only affect the spray system when the master boom switch is on.

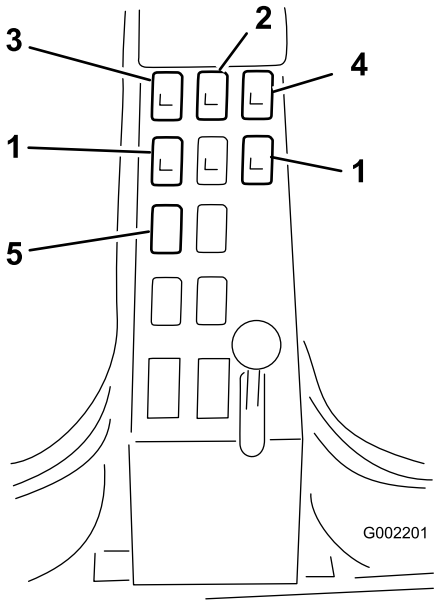

Figure 12

1. Boom switches, left, right and center
2. Pump switch
3. Application rate switch
4. Agitation
5. Boom lift switch, left and right

Pump Switch

The pump switch is located on the control panel to the right of the seat (Figure 12). Toggle this switch forward to run the pump or rearward to stop the pump. When the switch is turned on, a light on the switch illuminates.

Important: Only engage the pump switch when the engine is at low idle to avoid damaging the pump drive.

Application Rate Switch

The application rate switch is located on the control panel to the right of the seat (Figure 12). Press and hold the switch forward to increase the spray system pressure, or press and hold it rearward to decrease pressure.

Boom Lift

The boom lift switches are located on the control panel to the right of the seat and used to raise the left and right boom respectively (Figure 12).

Sonic Boom (Optional)

The Sonic Boom switch is a rocker switch used to operate the Sonic Boom. Toggle switch forward for automatic, rearward for manual and center for Off. The sprayer comes with plastic plugs in these locations.

Foam Marker Switch Locations (Optional)

If you install the foam marker kit, you will add switches to the control panel for controlling their operation. The sprayer comes with plastic plugs in these locations.

Agitation Switch

The agitation switch is located on the control panel to the right of the seat (Figure 12). Toggle this switch forward to turn on the agitation in the tank or rearward to stop the agitation. When the switch is turned on, a light on the switch illuminates. For agitation to work, the pump must be on and the engine must be running above an idle. The agitation valve is located behind the tank (Figure 13)

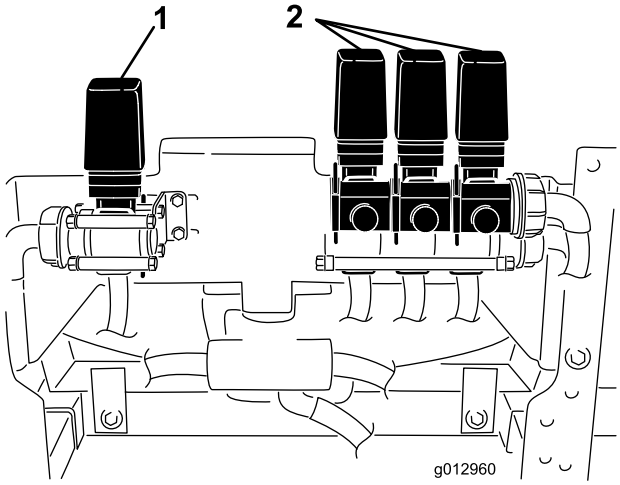

Figure 13

1. Agitation valve
2. Boom valves

Boom Valves

These valves turn the three booms on or off (Figure 13). If you ever need to manually turn off a boom, rotate the knob on the valve clockwise to turn the valve off or counterclockwise to turn it on.

Note: Turning the boom valve manually can interfere with the function of the fuses. The fuses should be checked after manually rotating the valve.

Boom Bypass Valves

The boom bypass valves redirect the fluid flow for a boom to the tank when you turn off the boom section. They are located at the bottom of each boom valve section. You can adjust these valves to ensure that the boom pressure remains constant no matter how many booms are on. Refer to Calibrating the Boom Bypass Valves in the Operation section.

Note: If you use the Pro Control, you must shut all the bypass valves.

Anti-siphon Fill Receptacle

To the front of the tank cover is a hose receptacle with a threaded fitting, a 90 degree barbed fitting, and a short hose which you can direct toward the tank opening. This receptacle allows you to connect a water hose to it and fill the tank with water without contaminating the hose with the chemicals in the tank.

Important: Do not lengthen the hose to allow contact with the tank fluids. The distance from the end of the hose to the uppermost water level should be within local regulatory limits.

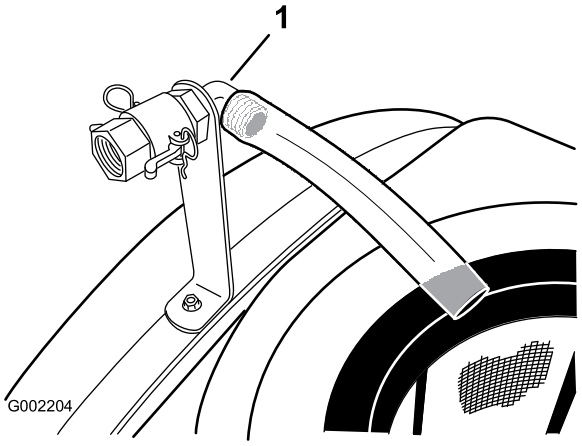

Figure 14

1. Anti-siphon fill receptacle

Tank Cover

The tank cover is located in the center of the top of the tank. To open it, turn off the engine, then turn the front half of the cover to the left and swing it open. You can remove the strainer inside for cleaning. To seal the tank, close the cover and rotate the front half toward the right.

Specifications

Note: Specifications and design are subject to change without notice.

Base weight	2,700 lb (1225 kg)
Weight with standard spray system, empty, without operator	2,700 lb (1225 kg)
Weight with standard spray system, full, without operator	5,645 lb (2,560 kg)
Maximum gross vehicle weight (GVW) (on level ground)	6,525 lb (2,960 kg)
Tank capacity	300 US gallons (1135.6 L)
Overall width with standard spray system booms stored in the X position	74 3/4 inches (189 cm)

Overall length with standard spray system	154 inches (391 cm)
Overall length with standard spray system to the top of the booms stored in the X position	174 inches (442 cm)
Overall height with standard spray system	57.5 inches (146 cm)
Overall height with standard spray system to the top of the booms stored in the X position	91 inches (231 cm)
Ground clearance	7.25 inches (18.4 cm)
Wheel base	78 inches (198 cm)

Optional Equipment

The Toro Company has optional equipment and accessories that you can purchase separately and install on your sprayer. Contact your Authorized Service Dealer for a complete list of optional equipment that is currently available for your sprayer.

Operation

Note: Determine the left and right sides of the machine from the normal operating position.

Think Safety First

Please carefully read all of the safety instructions and decals in the safety section. Knowing this information could help you or bystanders avoid injury.

Before Driving the Sprayer for the First Time

Check the Engine Oil

Note: The best time to check the engine oil is when the engine is cool, before it has been started for the day. If it has already been run, allow the oil to drain back down to the sump for at least 10 minutes before checking. If the oil level is at or below the 'add' mark on the dipstick, add oil to bring the oil level to the 'full' mark. **Do not overfill.** If the oil level is between the 'full' and 'add' marks, no oil addition is required.

The engine is shipped with oil in the crankcase; however, the level of oil must be checked before you first start the engine and after you have run it.

1. Position the machine on a level surface.
2. Remove the dipstick, located under the passenger seat, and wipe it with a clean rag (Figure 15). Insert the dipstick into the tube and make sure it is seated fully. Remove the dipstick and check the oil level.

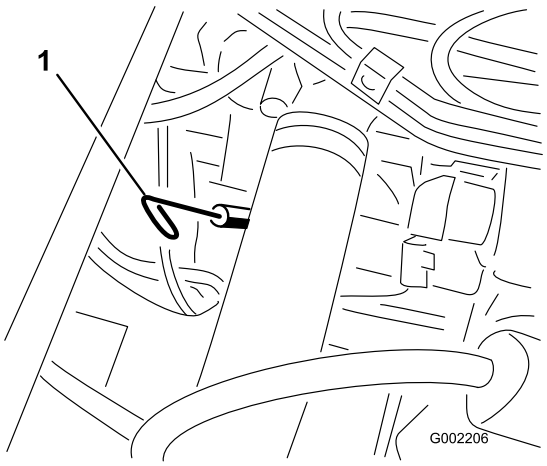

Figure 15

1. Dipstick

3. If the oil level is low, remove the filler cap from the valve cover (Figure 16) and pour oil into the opening until the oil level is up to the Full mark on

the dipstick; refer to Servicing Engine Oil, in the Engine Maintenance section, for the proper oil type and viscosity. Add the oil slowly and check the level often during this process. Do not overfill.

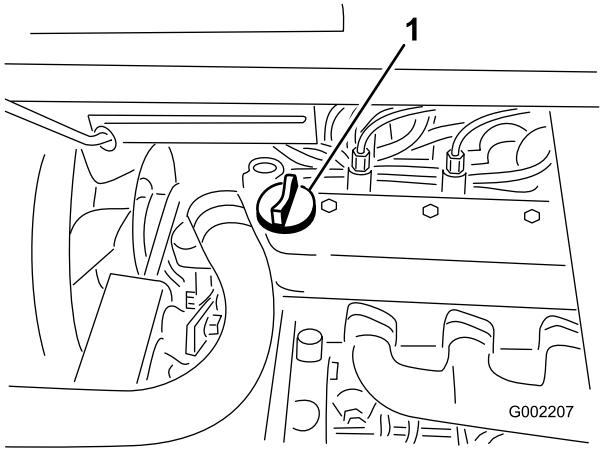

Figure 16

1. Oil filler cap

4. Install the filler cap.
5. Install the dipstick firmly in place.

Check the Tire Pressure

Check the tire pressure every 8 hours or daily to ensure proper levels. Fill the tires to 18 psi (124 kPa). Also, check the tires for wear or damage.

Add Fuel

⚠ DANGER

In certain conditions, fuel is extremely flammable and highly explosive. A fire or explosion from fuel can burn you and others and can damage property.

- **Fill the fuel tank outdoors, in an open area, when the engine is cold. Wipe up any fuel that spills.**
- **Do not fill the fuel tank completely full. Add fuel to the fuel tank until the level is 1 inch (25 mm) below the bottom of the filler neck. This empty space in the tank allows fuel to expand.**
- **Never smoke when handling fuel, and stay away from an open flame or where fuel fumes may be ignited by a spark.**
- **Store fuel in an approved container and keep it out of the reach of children. Never buy more than a 30-day supply of fuel.**

⚠ DANGER

In certain conditions during fueling, static electricity can be released causing a spark which can ignite the fuel vapors. A fire or explosion from fuel can burn you and others and can damage property.

- **Always place fuel containers on the ground away from your vehicle before filling.**
- **Do not fill fuel containers inside a vehicle or on a truck or trailer bed because interior carpets or plastic truck bed liners may insulate the container and slow the loss of any static charge.**
- **When practical, remove gas-powered equipment from the truck or trailer and refuel the equipment with its wheels on the ground.**
- **If this is not possible, then refuel such equipment on a truck or trailer from a portable container, rather than from a fuel dispenser nozzle.**
- **If a fuel dispenser nozzle must be used, keep the nozzle in contact with the rim of the fuel tank or container opening at all times until fueling is complete.**

Recommended fuel

The engine runs on No. 2-D or 1-D automotive type diesel fuel with a minimum cetane rating of 40.

Note: Your engine may require a higher cetane-rated fuel if you operate the machine at high altitudes or in low atmospheric temperatures.

Biodiesel Ready

This machine can also use a biodiesel blended fuel of up to B20 (20% biodiesel, 80% petrodiesel). The petrodiesel portion should be low or ultra low sulfur. Observe the following precautions:

- The biodiesel portion of the fuel must meet specification ASTM D6751 or EN14214.
- The blended fuel composition should meet ASTM D975 or EN590.
- Painted surfaces may be damaged by biodiesel blends.
- Use B5 (biodiesel content of 5%) or lesser blends in cold weather.
- Monitor seals, hoses, gaskets in contact with fuel as they may be degraded over time.
- Fuel filter plugging may be expected for a time after converting to biodiesel blendsd.
- Contact your distributor if you wish for more information on biodiesel.

Filling the Fuel Tank

The fuel tank capacity is approximately 10.6 US gallons (40 l).

Note: The fuel tank cap contains a gauge which shows the fuel level; check it frequently.

1. Position the sprayer on a level surface.
2. Set the parking brake, stop the pump, stop the engine, remove the ignition key, and allow the engine to cool.
3. Clean the area around the fuel tank cap (Figure 17).

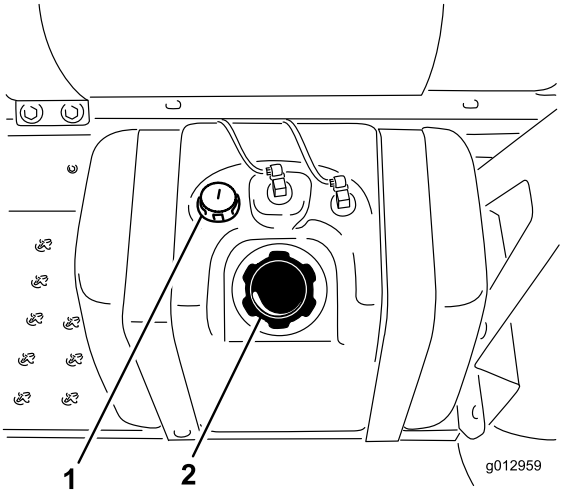

Figure 17

1. Fuel gauge
2. Fuel tank cap

4. Remove the fuel tank cap.

⚠ DANGER

Under certain conditions, diesel fuel and fuel vapors are highly flammable and explosive. A fire or explosion from fuel can burn you and others and can cause property damage.

- **Use a funnel and fill the fuel tank outdoors, in an open area, when the engine is off and is cold. Wipe up any fuel that spills.**
- **Do not fill the fuel tank completely full. Add fuel to the fuel tank until the level is 1 inch (25 mm) below the bottom of the filler neck. This empty space in the tank allows the fuel to expand.**
- **Never smoke when handling fuel, and stay away from an open flame or where fuel fumes may be ignited by a spark.**
- **Store fuel in a clean, safety-approved container and keep the cap in place.**

5. Fill the tank to about one inch below the top of the tank, (bottom of the filler neck).

   Note: This space in the tank allows fuel to expand. **Do not overfill.**

6. Install the fuel tank cap securely.
7. Wipe up any fuel that may have spilled.

Adjusting the Booms to Level

1. At the operator's position, turn the ignition key to On to energize the system.
2. Move the booms into position so that they are level with the ground.
3. Remove the key and exit the operator's position.
4. At the hinge, adjust the position of the bumpers so the boom can not move past level with the ground. Take care to make sure the bumper is level.
5. Tighten the bolt and nut to lock the bumpers into the adjusted position. Torque the fasteners to 135-165 ft-lbs (183-223 N-m).

Note: The bumper may experience some compression over time. If the booms drop below level, use this procedure to readjust the bumper position needed.

Note: Under certain conditions, the booms may need to follow the ground contours below grade. You can adjust the booms for full movement by lowering the bumpers.

Pre-Starting Checks

Check the following items each time you begin using the sprayer for the day:

- Check the tire pressure.

  Note: These tires are different than car tires; they require less pressure to minimize turf compaction and damage.

- Check all fluid levels and add the appropriate amount of specified fluids, if any are found to be low.
- Check the brake pedal operation.
- Check to see that the lights are working.
- With the engine off, check for oil leaks, loose parts, and any other noticeable malfunctions.

If any of the above items are not correct, notify your mechanic or check with your supervisor before taking the sprayer out for the day. Your supervisor may want you to check other items on a daily basis, so ask what your responsibilities are.

Driving the Sprayer

Starting the Engine

1. Sit on the operator's seat and keep your foot off the traction pedal.
2. Ensure that the parking brake is engaged, the traction pedal is in the Neutral position, the throttle is in the Slow position.
3. Turn the ignition switch to the On/Preheat position.

   Note: An automatic timer will control the preheat for approximately 6 seconds.
4. After preheating, turn the key to the Start position.
5. Crank the engine for no longer than 15 seconds.
6. Release the key when the engine starts.
7. If the engine requires additional preheating, turn the key to the Off position, then to the On/Preheat position.

   Note: Repeat steps through as required.
8. Run the engine at idle speed or partial throttle until the engine warms up.

Driving

1. Press the traction pedal forward to drive forward or rearward to drive in reverse.

   Important: Ensure that you allow the sprayer to come to a stop before switching between the Forward and Reverse positions.
2. To slowly stop the sprayer, release the traction pedal.
3. To stop quickly, press the brake pedal.

   Note: Stopping distance may vary depending on the sprayer load and speed.

Setting the Cruise Control

⚠ CAUTION

If you press the switch to turn off the cruise control and do not have your foot on the traction pedal, the traction unit may suddenly stop and cause you to lose control, possibly injuring you or bystanders.

Ensure that you have you foot on the traction pedal when you disengage the cruise control using the switch.

1. Drive forward and attain the desired speed; refer to Driving the Sprayer.
2. Press the top of the cruise control switch.

   Note: The light on the switch illuminates.
3. Take your foot off the traction pedal.

   Note: The sprayer will maintain the speed you set.
4. To release the cruise control, either place your foot on the traction pedal and press the bottom of the cruise control switch or remove your foot from the traction pedal and press the brake pedal.

   Note: The light on the switch turns off and the traction control returns to the traction pedal.

Stopping the Engine

1. Press the brake to stop the sprayer.
2. Move all the controls to the Neutral position.
3. Set the parking brake.
4. Shift the throttle lever to the Idle position.
5. Turn the ignition key to the Off position.
6. Remove the key from the switch to prevent someone from accidentally starting the engine.

New Sprayer Break-In

To provide proper performance and long sprayer life, follow these guidelines for the first 100 operating hours:

- Check the fluid and engine oil levels regularly and be alert for indications of overheating in any component of the sprayer.
- After starting a cold engine, let it warm up for about 15 seconds before accelerating.
- Avoid hard braking situations for the first several hours of new sprayer break-in operation. New brake linings may not be at optimum performance until several hours of use has caused the brakes to become burnished (broken-in).
- Avoid racing the engine.
- Vary the sprayer speed during operation. Avoid fast starts and quick stops.
- Refer to the Maintenance section for any special low hour checks.

Adjusting the Booms to Level

The following procedure can be used to adjust the hardstops on the center boom to keep the left and right booms at level.

1. At the operator's position, turn the ignition key to On to energize the system.
2. Move the booms into position so that they are level with the ground.
3. Remove the key and exit the operator's position.

4. At the hinge, adjust the position of the bumpers so the boom can not move past level with the ground. Take care to make sure the bumper is level.
5. Tighten the bolt and nut to lock the bumpers into the adjusted position. Torque the fasteners to 135-165 ft-lbs (183-223 N-m).

Note: The bumper may experience some compression over time. If the booms drop below level, use this procedure to readjust the bumper position needed.

Operating the Sprayer

To operate the Multi-Pro Sprayer first fill the spray tank, then apply the solution to the work area, and finally clean the tank. It is important that you complete all three of these steps in succession to avoid damaging the sprayer. For example, do not mix and add chemicals in the spray tank at night and then spray in the morning. This would lead to separation of the chemicals and possible damage to the sprayer components.

⚠ CAUTION

Chemicals are hazardous and can cause personal injury.

- **Read the directions on the chemical labels before handling the chemicals and follow all manufacturer recommendations and precautions.**
- **Keep chemicals away from your skin. Should contact occur, wash the affected area thoroughly with soap and clean water.**
- **Wear goggles and any other protective equipment recommended by the chemical manufacturer.**

The Multi-Pro Sprayer has been specifically designed to have high durability in order to give it the long sprayer life you need. Different materials have been chosen for specific reasons at different locations on your sprayer to meet this goal. Unfortunately there is no single material which is perfect for all foreseeable applications.

Some chemicals are more aggressive than others and each chemical interacts differently with various materials. Some consistencies (e.g. wettable powders, charcoal) are more abrasive and lead to higher wear rates. If a chemical is available in a formulation that would provide increased life to the sprayer, use this alternative formulation.

As always, remember to clean your sprayer thoroughly after all applications. This will do the most to ensure your sprayer has a long and trouble free life.

Filling the Fresh Water Tank

Always fill the fresh water tank with clean water before handling or mixing any chemicals.

The fresh water tank is located at the rear, left side of the chemical tank (Figure 18). It supplies a source of fresh water for you to wash chemicals off of your skin, eyes, or other surfaces in the case of accidental exposure.

To open the fresh water tank spigot, turn the lever on the spigot.

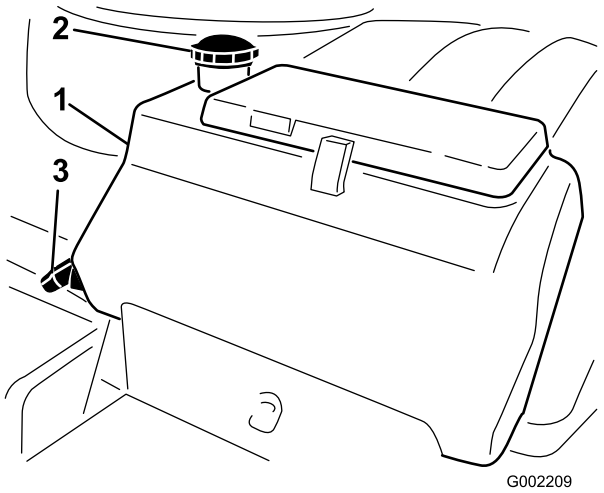

Figure 18

1. Fresh water tank
2. Filler cap
3. Spigot

Filling the Spray Tank

Important: Ensure that the chemicals you will be using are compatible for use with Viton (see the manufacturer's label; it should indicate if it is not compatible). Using a chemical that is not compatible with Viton will degrade the O-rings in the sprayer, causing leaks.

Important: The tank markings are for reference only and cannot be considered accurate for calibration.

1. Stop the sprayer on a level surface, move the range selector to the Neutral position, stop the engine, and set the parking brake.
2. Determine the amount of water needed to mix the amount of chemical you need as prescribed by the chemical manufacturer.
3. Open the tank cover on the spray tank.

   The tank cover is located in the center of the top of the tank. To open it, turn the front half of the cover counterclockwise and swing it open. You

can remove the strainer inside for cleaning. To seal the tank, close the cover and rotate the front half clockwise.

4. Add 3/4 of the required water to the spray tank using the anti-siphon fill receptacle.

   Important: Always use fresh clean water in the spray tank. Do not pour concentrate into an empty tank.

5. Start the engine, set the pump switch to the On position, and move the throttle lever to a higher idle.
6. Set the agitation switch to the On position.

   Important: Prior to introducing wettable powders into any Toro Spray System mix the powders in a suitable container with sufficient fresh water to create a free flowing slurry. Best results may be obtained by using warm water. Failure to do so may result in chemical deposits on the bottom of the tank, degraded agitation, clogging of filters and improper agitation rates.

7. Add the proper amount of chemical concentrate to the tank, as directed by the chemical manufacturer.
8. Add the remaining water to the tank.

Operating the Booms

The boom lift switches on the sprayer control panel allows you to move the booms between transport position and spray position without leaving the Operator's seat. It is recommended to change boom positions while the machine is stationary.

To change the boom position:

1. Stop the sprayer on level ground.
2. Use the boom lift switches to lower booms. Wait until the booms reach the full, extended spray position.
3. When the booms need to be retracted, stop the sprayer on level ground.
4. Use the boom lift switches to raise the booms. Raise the booms until they have moved completely into boom transport cradle forming the "X" transport position and the boom cylinders are fully retracted.

Important: To prevent damage to the boom actuator cylinder, make sure the actuators are fully retracted before transport.

Important: Release the actuator switch once the booms have reached the desired position. Running the actuators against the stops will cause the motors to overheat, tripping the breakers and risk damaging the actuators.

The Boom Transport Cradle

The sprayer is equipped with a boom transport cradle that has a unique safety feature. In the event of accidental boom contact with a low overhead object while in the transport position, the boom(s) can be pushed out of the transport cradles. If this occurs, the booms will come to rest in a near horizontal position to the rear of the vehicle. While the booms will not be damaged due to this movement, they should be immediately put back into the transport cradle.

Important: The booms can be damaged by transporting them in any position other than the "X" transport position using the boom transport cradle.

To put the booms back into the transport cradle, lower the boom(s) to the spray position, and then raise the boom(s) back into the transport position. Make sure the boom cylinders are fully retracted to prevent actuator rod damage during storage.

Spraying

Important: In order to ensure that your solution remains well mixed, use the agitation feature whenever you have solution in the tank. For agitation to work, the pump must be on and the engine must be running above an idle.

Note: This procedure assumes that the pump is on from the Filling the Spray Tank procedure.

1. Set the master boom switch to the Off position.
2. Adjust the throttle to the desired position to spray at.
3. Drive to the location where you will be spraying.
4. Lower the booms into position.
5. Set the individual boom switches, as needed, to the On positions.
6. Use the application rate switch to achieve the desired pressure as indicated in the *Nozzle Selection Guide* provided with the sprayer.
7. Drive at the desired speed and then set the master boom switch to the On position to begin spraying.

   Note: When the tank is nearly empty, the agitation may cause foaming in the tank. In this case, turn the agitation switch off. Alternatively, you can use an anti-foaming agent in the tank.

8. When finished spraying, set the master boom switch to the Off position to turn off all booms, then set the pump switch to the Off position.

Note: Return the booms to the transport position and drive the sprayer to the cleaning area.

Important: Always raise the booms until they have moved completely into boom transport cradle forming the "X" transport position and the boom cylinders are fully retracted whenever you move the sprayer from one spraying area to another or move to a storage or cleaning area.

Turf Care Precautions While Operating in Stationary Modes

Important: Under some conditions, heat from the engine, radiator, and muffler can potentially damage grass when operating the sprayer in a stationary mode. Stationary modes include tank agitation, hand spraying with a spray gun, or using a walking boom.

Use the following precautions:

- **Avoid** stationary spraying when conditions are very hot and/or dry, as turf can be more stressed during these periods.
- **Avoid** parking on the turf while stationary spraying. Park on a cart path whenever possible.
- **Minimize** the amount of time the machine is left running over any particular area of turf. Both time and temperature affect how much the grass may be damaged.
- **Set the engine speed as low as possible** to achieve the desired pressure and flow. This will minimize the heat generated and the air velocity from the cooling fan.
- **Allow heat to escape** upward from the engine compartment by raising the seat assemblies during stationary operation rather than being forced out under the vehicle.

Spraying Tips

- Do not overlap areas that you have previously sprayed.
- Watch for plugged nozzles. Replace all worn or damaged nozzles.
- Use the master boom switch to stop the spray flow before stopping the sprayer. Once stopped, use the neutral engine speed control to hold the engine speed up to keep the agitation running.
- You will obtain better results if the sprayer is moving when you turn the booms on.

Unclogging a Nozzle

If a nozzle becomes clogged while you are spraying, you can clean it using a hand spray bottle of water or a toothbrush.

1. Stop the sprayer on a level surface, stop the engine, and set the parking brake.
2. Set the master boom switch to the Off position and then set the pump switch to the Off position.
3. Remove the clogged nozzle and clean it using a spray bottle of water or a toothbrush.

Selecting a Nozzle

The turret bodies can accept up to 3 different nozzles. To select the desired nozzle:

1. Stop the sprayer on a level surface, stop the engine, and set the parking brake.
2. Set the master boom switch to the Off position and set the pump switch to the Off position.
3. Rotate the turret of the nozzles in either direction to the correct nozzle.

Cleaning the Sprayer

Important: You must always empty and clean the sprayer immediately after each use. Failure to do so may cause the chemicals to dry or thicken in the lines, clogging the pump and other components.

Clean the spray system after **each** spraying session. To properly clean the spray system:

- Use three separate rinses.
- Use a minimum of 50 gallons for each rinse.
- Use the cleaners and neutralizers as recommended by the chemical manufacturers.
- Use pure clean water (no cleaners or neutralizers) for the **last** rinse.

1. Stop the sprayer, set the parking brake, and turn off the engine.
2. Locate the tank drain valve on the rear of the machine (Figure 19). The valve is to the rear of pump, attached to the support bracket.

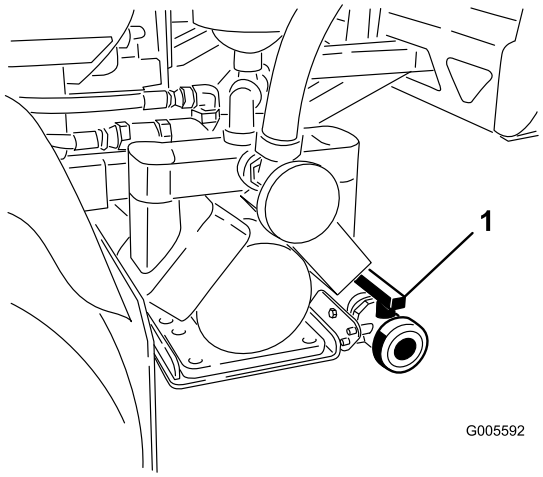

Figure 19

1. Tank drain handle

Open the valve to drain any unused material from the tank and dispose of it according to local codes and the material manufacturer's instructions (Figure 20). After draining, remove the lynch pin on the bracket securing the drain valve to the machine and let the valve rest on the ground . This allows any residual material in the line to drain.

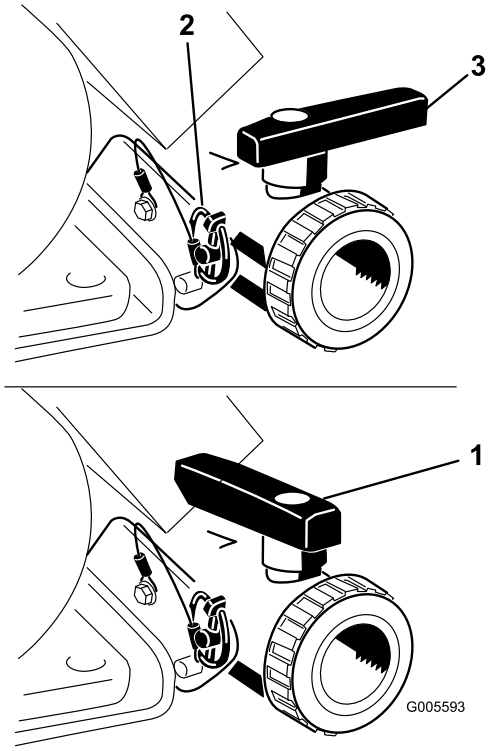

Figure 20

1. Valve open
2. Lynch pin
3. Valve closed

3. When the tank has drained completely, install the valve to frame with the lynch pin removed previously and close the drain valve (Figure 20).
4. Fill the tank with at least 50 US gallons (190 L) of clean fresh water and close the cover.

   Note: You can use a cleaning/neutralizing agent in the water as needed. On the final rinse, use only clean, clear water.
5. Lower the booms into the spray position.
6. Start the engine and move the throttle lever to a higher idle.
7. Ensure that the agitation switch is in the On position.
8. Set the pump switch to the On position and use the application rate switch to increase the pressure to a high setting.
9. Set the master boom switch and boom control switches to the On positions to begin spraying.
10. Allow all of the water in the tank to spray out though the nozzles.
11. Check the nozzles to ensure that they are all spraying correctly.
12. Set the master boom switch to the Off position, set the pump switch to the Off position, and stop the engine.
13. Repeat steps 4 through 12 at least 2 more times to ensure that the spray system is fully cleaned.

    Important: You must always complete this procedure at least 3 times to ensure that the spray system is fully clean, preventing damage to the system.
14. Clean the strainer; refer to Cleaning the Suction Strainer in Cleaning section.

    Important: If you used wettable powder chemicals, clean the strainer after each tank.
15. Using a garden hose, rinse off the outside of the sprayer with clean water.
16. Remove the nozzles and clean them by hand. Replace damaged or worn nozzles.

Calibrating the Boom Bypass Valves

Important: If you have the Pro Control™ Spray System installed, the boom bypass valves must be closed. Use the following adjustment only when you are *not* using the Pro Control Spray System.

Before using the sprayer for the first time or if the nozzles are changed, adjust the boom bypass valves so that the pressure and application rate remains the same for all booms when you turn one or more booms off.

Note: The boom bypass valves must be calibrated each time the nozzles are changed.

Select an open flat area to perform this procedure.

1. Fill the spray tank with clean water.
2. Put the extension booms down, if installed.
3. Set the parking brake and start the engine .
4. Move the throttle lever to the Spray position.
5. Set the pump switch to the On position to start the pump.
6. Set all three boom switches and the master boom switch to the On position.
7. Use the application rate switch to adjust the pressure as read on the pressure gauge until it is in the range for the nozzles you installed on the booms (typically 40 psi).
8. Record the reading on the pressure gauge.
9. Turn off one of the booms using the appropriate boom switch.
10. Adjust the boom bypass valve (Figure 21) on the backside of the boom control valve for the boom you turned off until the pressure reading on the gauge is the same as it was in step 7.

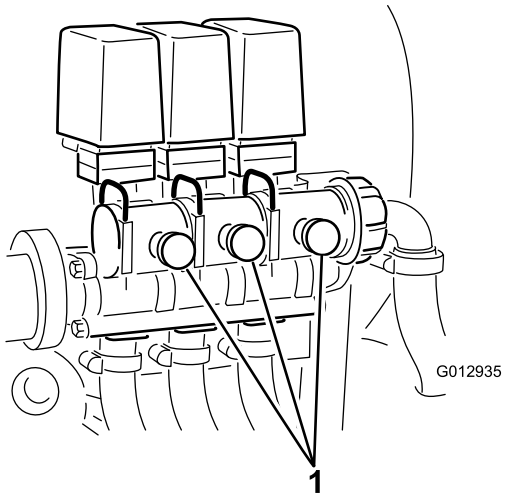

Figure 21

1. Boom bypass valves

11. Turn the boom on and off to verify the pressure does not change.
12. Repeat steps 9 through 11 for the other booms.
13. Drive the sprayer at the desired speed while spraying and turn each boom off individually. The pressure on the gauge should not change.

Pump

The pump is located near the back of the tank on the left side (Figure 22).

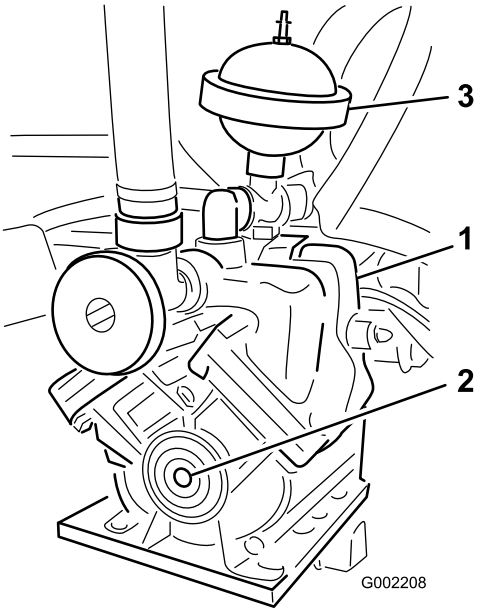

Figure 22

1. Pump
2. Grease fitting
3. Pressure dampener

Adjusting the Air Pressure in Dampener

The air pressure in the dampener on the pump is set at 15 psi (1 bar) by the manufacturer. The recommended pressure in the dampener is 1/3 of the spraying pressure. If using a spray pressure greater than 45 psi (3.1 bar) adjust the dampener accordingly.

Transporting the Sprayer

For moving the sprayer long distances, use a trailer. Secure the sprayer to the trailer.Figure 23 and Figure 24illustrate the tie-down points.

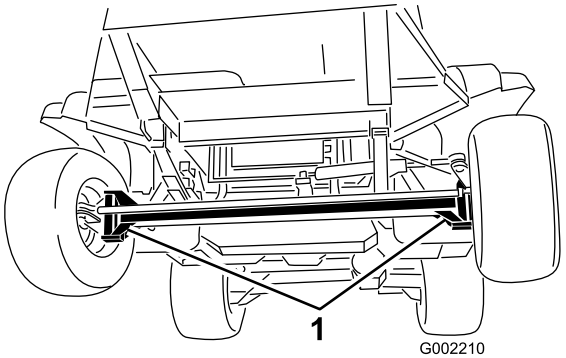

Figure 23

1. Tie down points

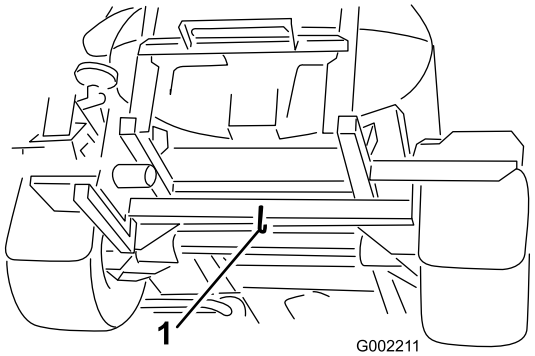

Figure 24

1. Rear tie-down point

Towing the Sprayer

In case of an emergency, the sprayer can be towed for a short distance after you open the tow valve. However, we do not recommend this as a standard procedure.

⚠ WARNING

Towing at excessive speeds could cause a loss of steering control, resulting in personal injury.

Never tow the sprayer faster than 3 mph (4.8 kph).

Towing the sprayer is a two person job. If the machine must be moved a considerable distance, transport it on a truck or trailer; refer to Transporting the Sprayer.

1. Rotate the tow valve (Figure 25) 90 degrees in either direction to open it.

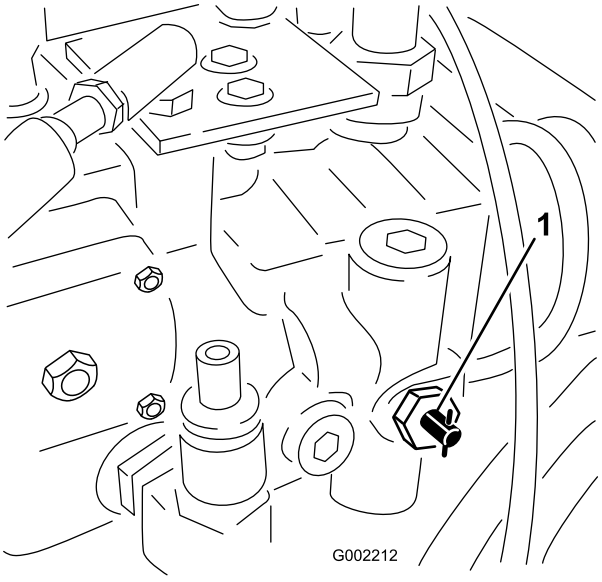

Figure 25

1. Tow valve

Important: If you do not open the tow valve before towing the sprayer you will damage the transmission.

2. Affix a tow line to the frame. Refer to the front and rear towing points in Figure 26and Figure 27.

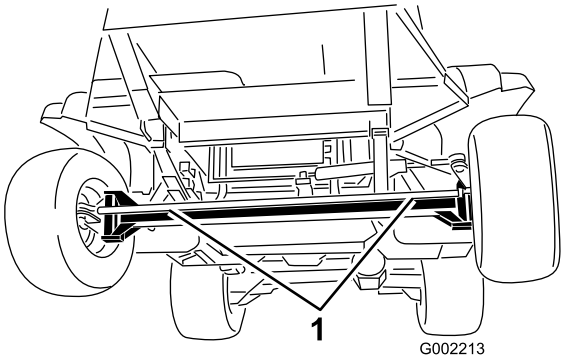

Figure 26

1. Front towing points

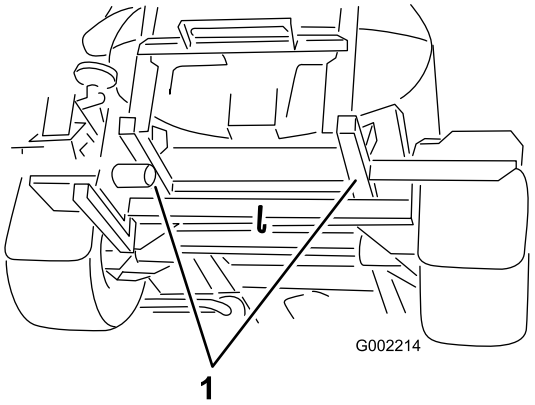

Figure 27

1. Rear towing points

3. Release the parking brake.
4. Tow the sprayer at less than 3 mph (4.8 kph).
5. When finished, close the tow valve and torque it to no more than 5 to 8 ft-lb (7 to 11 N-m).

Maintenance

Note: Determine the left and right sides of the machine from the normal operating position.

Recommended Maintenance Schedule(s)

Maintenance Service Interval	Maintenance Procedure
After the first 5 hours	• Replace the hydraulic oil filter.
After the first 8 hours	• Torque the wheel lug nuts. • Change the rear planetary gearbox fluid. • Check the fan/alternator belt
After the first 50 hours	• Change the engine oil (including synthetic oil) and oil filter. • Check the fuel lines and connections.
After the first 200 hours	• Pack the front wheel bearings.
Before each use or daily	• Check the air filter, cap, and valve for wear or damage. • Check the engine oil. • Check the tire pressure. • Check the coolant level. • Check the brakes. • Check the hydraulic oil level. • Clean the suction strainer. (More often when using wettable powders)
Every 50 hours	• Lubricate the pump. • Lubricate all grease fittings. • Check the battery cable connections.
Every 100 hours	• Lubricate the boom hinges. • Service the air cleaner. (more often in dusty, dirty conditions). • Torque the wheel lug nuts. • Inspect the condition and wear of the tires. • Check the cooling system hoses for wear and damage. • Check the fan/alternator belt
Every 150 hours	• Replace the engine oil filter. • Change the engine oil, including synthetic oil (more often when operating under heavy load or in high temperature).
Every 200 hours	• Check front wheel toe-in. • Clean the radiator fins. • Inspect all hoses and connections for damage and proper attachment.
Every 400 hours	• Grease the actuator rod bearings. • Complete all yearly maintenance procedure specified in the engine operator's manual. • Check the fuel lines and connections. • Drain and clean the fuel tank. • Replace the fuel filter canister. • Replace the in-tank fuel filter. • Pack the front wheel bearings. • Change the planetary gearbox fluid. • Check the coolant (as directed by the manufacturer) and change if necessary. • Replace the hydraulic oil filter. • Change the hydraulic oil. • Inspect the O-rings in the valve assemblies and replace them if necessary. • Inspect the pump diaphragm and replace if necessary. (see an Authorized Toro Service Distributor) • Inspect the pressure dampener bladder and replace if necessary. (see an Authorized Toro Service Distributor)

Maintenance Service Interval	Maintenance Procedure
	• Inspect the pump check valves and replace if necessary. (see an Authorized Toro Service Distributor) • Check boom actuator hydraulic oil for air bubbles. • Inspect the nylon pivot bushings.
Yearly	• Flush the sprayer with clean water using the Cleaning the Sprayer procedure. During the rinse procedure, increase pump speed to open relief valve; purging valves and hoses of residual fluids.

Important: **Refer to your engine *Operator's Manual* for additional maintenance procedures.**

Daily Maintenance Checklist

Duplicate this page for routine use.

Maintenance Check Item	For the week of:						
	Mon.	Tues.	Wed.	Thurs.	Fri.	Sat.	Sun.
Check the brake and parking brake operation.							
Check the neutral lockout switch operation.							
Check the fuel level.							
Check the engine oil level.							
Check the hydraulic oil level.							
Check the coolant level.							
Inspect the air filter.							
Inspect the radiator and oil cooler for debris.							
Check any unusual engine noises.							
Check any unusual operating noises.							
Check the tire pressure.							
Check for fluid leaks.							
Check all hydraulic and fluid hoses for damage, kinks, or wear.							
Check the instrument operation.							
Check the accelerator operation.							
Clean the suction strainer.							
Lubricate all grease fittings.[1]							
Touch up and damaged paint.							

[1]Immediately after **every** washing, regardless of the interval listed

Notation for Areas of Concern

Inspection performed by:		
Item	**Date**	**Information**
1		
2		
3		
4		
5		
6		
7		
8		
9		
10		

⚠ CAUTION

If you leave the key in the ignition switch, someone could accidently start the engine and seriously injure you or other bystanders.

Remove the key from the ignition before you do any maintenance.

Premaintenance Procedures

Jacking the Sprayer

Whenever the engine is run for routine maintenance and/or engine diagnostics, the rear wheels of the sprayer should be 1 inch (25 mm) off of the ground with the rear axle supported on jack stands.

⚠ DANGER

A sprayer on a jack may be unstable and slip off of the jack, injuring anyone beneath it.

- **Do not start the engine while the sprayer is on a jack.**
- **Always remove the key from the ignition before getting off of the sprayer.**
- **Block the tires when the sprayer is on a jack.**

The jacking point at the front of the sprayer is under the front axle, directly under the leaf springs (Figure 28)

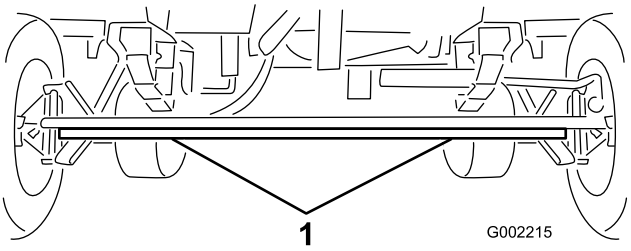

Figure 28

1. Front jacking points

The jacking point at the rear of the sprayer is on the rear side where the boom supports areFigure 29 and Figure 30.

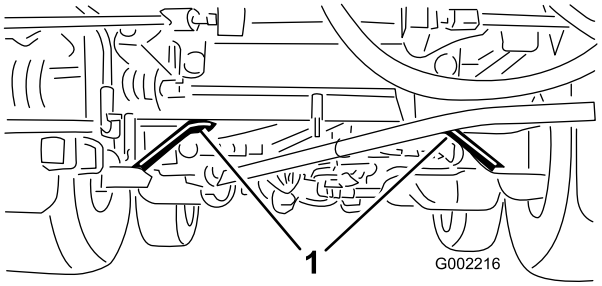

Figure 29

1. Rear jacking points

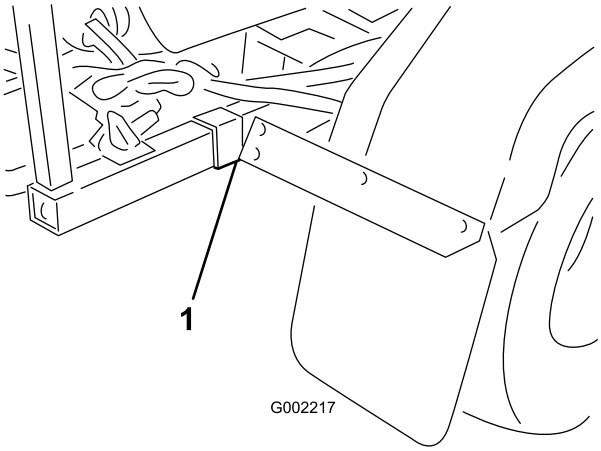

Figure 30

1. Rear jacking point (2)

Lubrication

Greasing the Sprayer

Service Interval: Every 50 hours—Lubricate the pump.

Every 50 hours/Yearly (whichever comes first)

Grease Type: No. 2 general-purpose lithium base grease. Toro Premium All Purpose Grease is available from you Toro Distributor.

1. Wipe the grease fitting clean so that foreign matter cannot be forced into the bearing or bushing.
2. Pump grease into the bearing or bushing.
3. Wipe off excess grease.

The grease fittings positions are illustrated in Figure 31 and Figure 32.

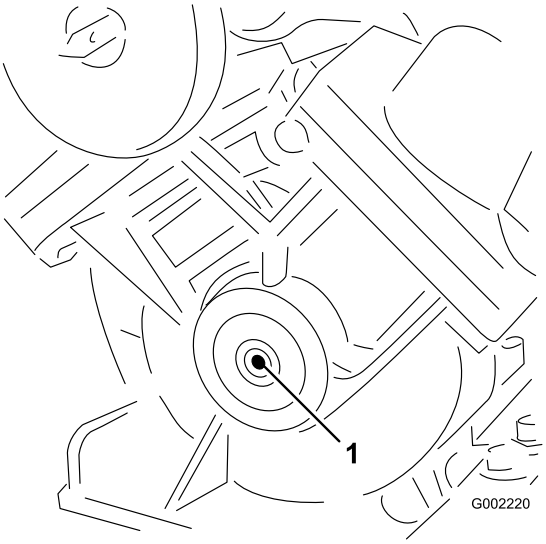

Figure 31

Pump (Do not over grease; grease will not purge)

1. Grease point

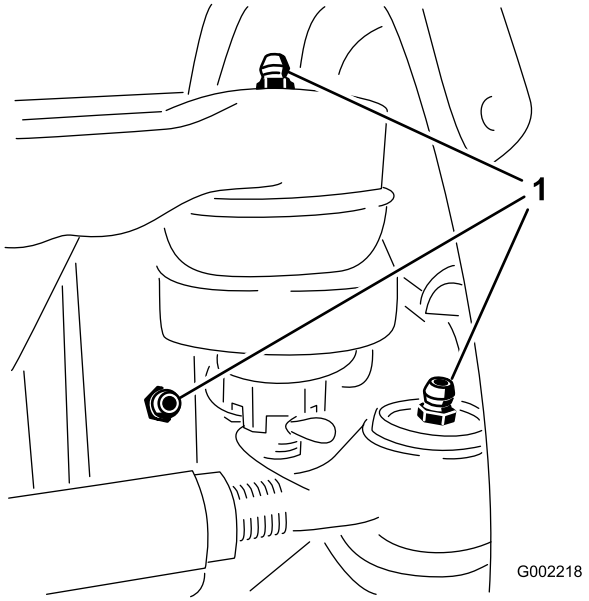

Figure 32
Three inside each front wheel

1. Grease point

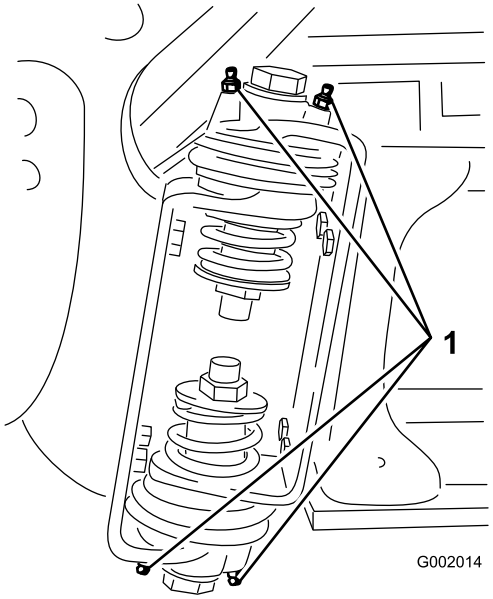

Figure 33
Right boom

1. Grease fitting

Greasing the Boom Hinges

Service Interval: Every 100 hours

Important: If the boom hinge is washed with water, all water and debris must be cleared from the hinge assembly and fresh grease must be applied.

Grease Type: No. 2 general-purpose lithium base grease.

1. Wipe the grease fittings clean so that foreign matter cannot be forced into the bearing or bushing.
2. Pump grease into the bearing or bushing at each fitting Figure 33.
3. Wipe off excess grease.
4. Repeat the procedure for each boom pivot.

Greasing the Actuator Rod Bearings

Service Interval: Every 400 hours/Yearly (whichever comes first)

Grease Type: No. 2 general-purpose lithium base grease.

1. Extend the booms to the spray position.
2. Remove the cotter pin from the pivot pin (Figure 34).

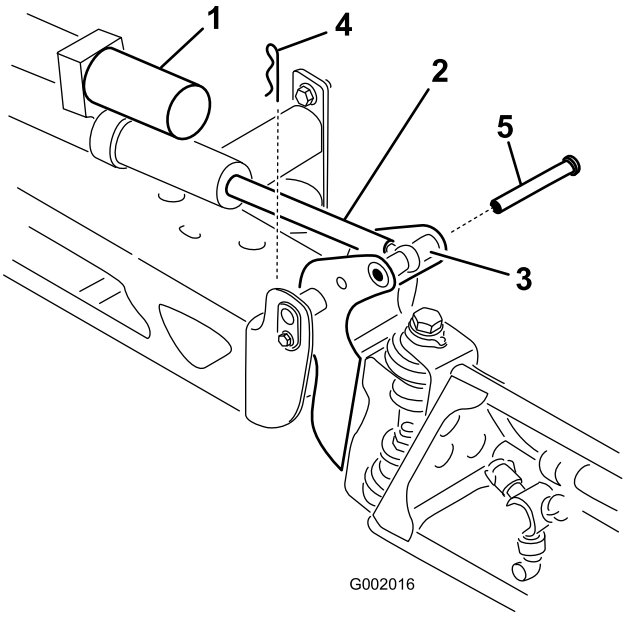

Figure 34

1. Actuator
2. Actuator rod
3. Boom pivot pin housing
4. Cotter
5. Pin

3. Lift up on the boom and remove the pin (Figure 34). Slowly lower the boom to the hardstop.
4. Inspect the pin for any damage, replace if necessary.
5. Manipulate the actuator rod bearing end and apply grease into the bearing (Figure 35). Wipe off excess grease.

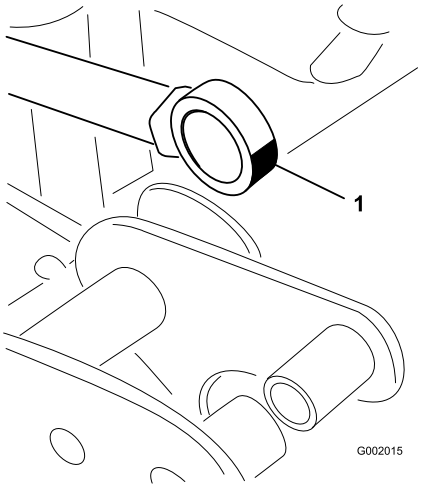

Figure 35
Right boom

1. Grease bearing

6. Lift up on the boom to align the pivot with the actuator rod. While holding the boom, insert the pin through both boom pivot and actuator rod (Figure 34).
7. With the pin in place, release the boom and secure the pin with the cotter removed previously.
8. Repeat the procedure for each actuator rod bearing.

Engine Maintenance

Servicing the Air Cleaner

Check the air cleaner body for damage that could cause an air leak. Ensure that the dust cap is tightly sealed onto the air cleaner. Replace a damaged air cleaner body. Squeeze the valve (Figure 36) before each use to clear it of dust and debris. Service the air cleaner filter every 100 hours.

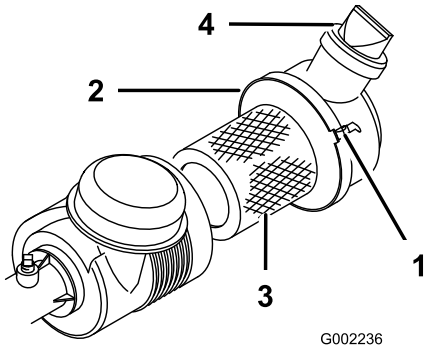

Figure 36

1. Air cleaner strap (2)
2. Dust cap
3. Filter
4. Valve

Note: Service the air cleaner more frequently if operating conditions are extremely dusty or sandy.

Cleaning the Filter and Housing

Service Interval: Before each use or daily

Important: Do not remove the air cleaner in an attempt to clean it. This increases the chance of dirt and debris entering the engine.

1. Set the parking brake, stop the pump, stop the engine, and remove the ignition key.
2. Raise the passenger seat.
3. Loosen the air cleaner strap that secures the air cleaner cover to the air cleaner body (Figure 36) and separate the cover from the body.
4. Use low pressure compressed air (40 psi, clean and dry), to remove dirt and debris from the inside of the air cleaner cover and around the air filter.

   Important: Avoid high pressure compressed air which can force dirt through the filter and into the engine.
5. Inspect the filter and replace it if it is damaged.
6. Install the cover with the valve pointing down at a 5–7 o'clock position when viewed from the end.
7. Secure the straps (Figure 36).
8. Remove the rubber valve cover from the air cleaner cover.
9. Clean the valve and replace it on the air cleaner cover.

Installing a New Filter Element

Service Interval: Every 100 hours

1. If you are installing a new filter, inspect it for shipping damage. Check the sealing end of the filter.

   Important: Do not install a damaged filter.
2. Gently slide the old filter out of the air cleaner body to reduce the amount of dust dislodged.

   Note: Avoid knocking the filter against the air cleaner body.
3. Insert the filter into the air cleaner body. Ensure that the filter is sealed properly by applying pressure to the outer rim of the filter when installing. Do not press on the flexible center of the filter.
4. Install the cover with the valve pointing down and secure the straps (Figure 36).
5. Squeeze the element to distribute the oil.

Servicing the Engine Oil

Change the engine oil and the oil filter after the first 50 operating hours and every 150 operating hours thereafter.

Crankcase Capacity is 4.9 qt (4.7 l) with the filter.

Use high-quality engine oil that meets the following specifications:

- API Classification Level Required: CH-4, CI-4 or higher.
- Preferred oil: SAE 15W40 (above 0 degrees F)
- Alternate oil: SAE 10W30 or 5W30 (all temperatures)

Toro Premium Engine Oil is available from your distributor in either 15W40 or 10W30 viscosity. See the *Parts Catalog* for part numbers.

Check the Engine Oil

Service Interval: Before each use or daily

Every 400 hours/Yearly (whichever comes first)

Note: The best time to check the engine oil is when the engine is cool, before it has been started for the day. If it has already been run, allow the oil to drain back down to the sump for at least 10 minutes before checking. If

the oil level is at or below the 'add' mark on the dipstick, add oil to bring the oil level to the 'full' mark. **Do not overfill.** If the oil level is between the 'full' and 'add' marks, no oil addition is required.

The engine is shipped with oil in the crankcase; however, the level of oil must be checked before you first start the engine and after you have run it.

1. Position the machine on a level surface.
2. Remove the dipstick, located under the passenger seat, and wipe it with a clean rag (Figure 37). Insert the dipstick into the tube and make sure it is seated fully. Remove the dipstick and check the oil level.

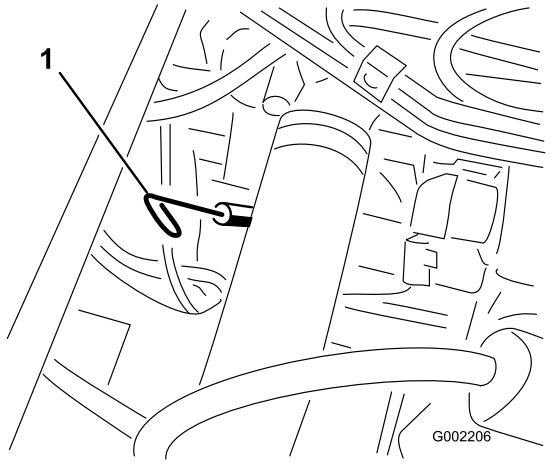

Figure 37

1. Dipstick

3. If the oil level is low, remove the filler cap from the valve cover (Figure 38) and pour oil into the opening until the oil level is up to the Full mark on the dipstick; refer to Servicing the Engine Oil for the proper oil type and viscosity. Add the oil slowly and check the level often during this process. Do not overfill.

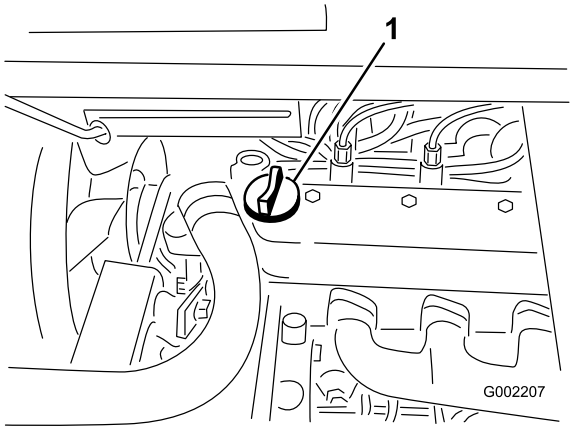

Figure 38

1. Oil filler cap

4. Install the filler cap.
5. Install the dipstick firmly in place.

Changing the Engine Oil and Filter

Service Interval: After the first 50 hours

Every 150 hours—Replace the engine oil filter.

Every 150 hours—Change the engine oil, including synthetic oil (more often when operating under heavy load or in high temperature).

1. Start the engine and let it run until warm; this warms the oil so it drains better.
2. Set the parking brake, stop the pump, stop the engine, and remove the ignition key.
3. Raise the seats.

⚠ CAUTION

Components under the seat will be hot if the sprayer has been running. If you touch hot components you may be burned.

Allow the sprayer to cool before performing maintenance or touching components under the hood.

4. Place a pan below the oil drain.
5. Remove the drain plug (Figure 39).

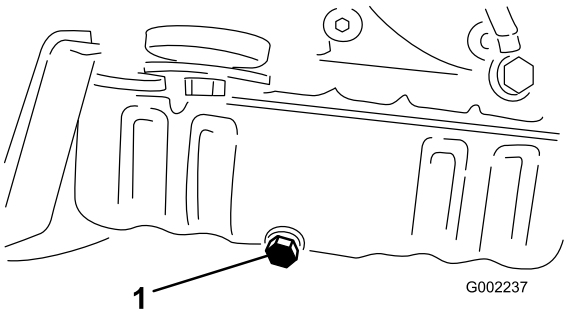

Figure 39

1. Oil drain plug

6. Place a separate pan under the oil filter.
7. Remove the old oil filter (Figure 40).

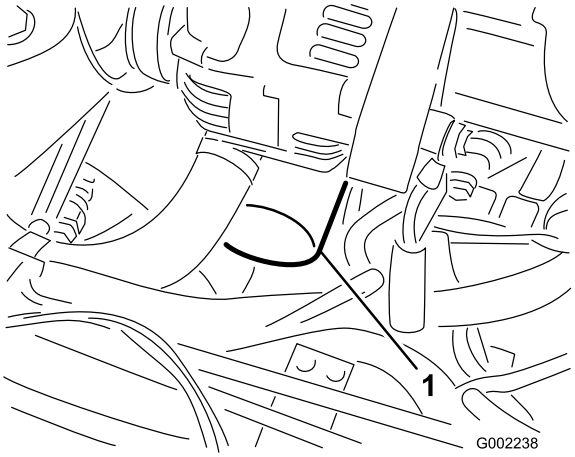

Figure 40

1. Oil filter

8. Wipe the filter adapter gasket surface.
9. Apply a thin coat of new oil to the rubber gasket on the replacement filter.
10. Install the replacement oil filter to the filter adapter. Turn the oil filter clockwise until the rubber gasket contacts the filter adapter, then tighten the filter an additional 1/2 turn (Figure 40).

    Note: Do not over tighten the filter.
11. When the oil has drained completely, replace the drain plug and torque it to 10 ft-lb (13.6 N-m).
12. Dispose of the used oil at a certified recycling center.
13. Remove the oil filler cap and slowly pour approximately 80% of the specified amount of oil into the engine at the oil filler (Figure 37).
14. Check the oil level.
15. Slowly add additional oil to bring the oil level to the full mark on the dipstick.

    Important: Overfilling the crankcase with oil may cause engine damage.
16. Replace the oil filler cap.

Fuel System Maintenance

⚠ DANGER

Under certain conditions, diesel fuel and fuel vapors are highly flammable and explosive. A fire or explosion from fuel can burn you and others and can cause property damage.

- **Use a funnel and fill the tank outdoors, in an open area, when the engine is off and is cold. Wipe up any fuel that spills.**
- **Do not fill the fuel tank completely full. Add fuel to the fuel tank until the level is 1 inch (25 mm) below the bottom of the filler neck. This empty space in the tank allows the fuel to expand.**
- **Never smoke when handling fuel, and stay away from an open flame or where fuel fumes may be ignited by a spark.**
- **Store fuel in a clean, safety-approved fuel container and keep the cap in place.**

Checking the Fuel Line and Connections

Service Interval: After the first 50 hours

Every 400 hours/Yearly (whichever comes first)

Inspect the lines and connections for deterioration, damage, or loose connections.

Bleeding the Fuel System

1. Park the machine on a level surface.
2. Ensure that the fuel tank is at least half full.

⚠ DANGER

Under certain conditions, diesel fuel and fuel vapors are highly flammable and explosive. A fire or explosion from fuel can burn you and others and can cause property damage.

- **Use a funnel and fill the fuel tank outdoors, in an open area, when the engine is off and is cold. Wipe up any fuel that spills.**
- **Do not fill the fuel tank completely full. Add fuel to the fuel tank until the level is 1 inch (25 mm) below the bottom of the filler neck. This empty space in the tank allows the fuel to expand.**
- **Never smoke when handling fuel, and stay away from an open flame or where fuel fumes may be ignited by a spark.**
- **Store fuel in a clean, approved fuel container and keep the cap in place.**

3. Open the vent plug on the fuel/water separator (Figure 41)

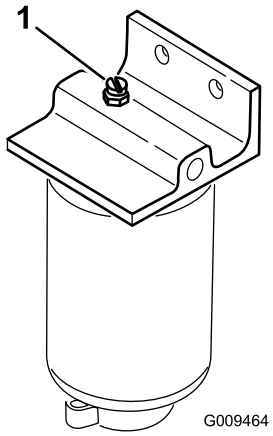

Figure 41

1. Vent plug

4. Turn the key in the ignition switch to the On position.

   Note: The electric fuel pump will begin forcing air out around the air bleed screw.

5. Leave key in the On position until a solid stream of fuel flows out around the screw.
6. Tighten screw and turn the key to the Off position.
7. Open the air bleed screw on the fuel injection pump (Figure 42).

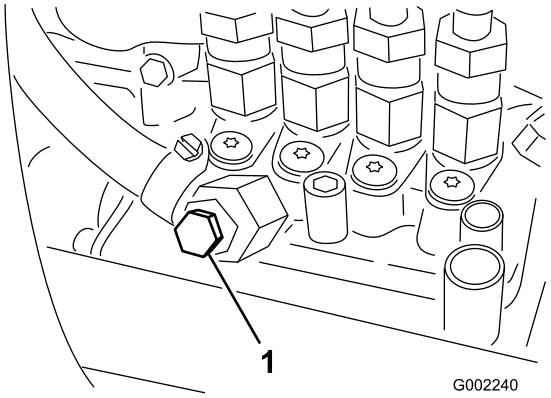

Figure 42

1. Fuel injection pump bleed screw

8. Turn key in ignition switch to the On position.

   Note: Electric fuel pump will begin operation, thereby forcing air out around air bleed screw on fuel injection pump.

9. Leave the key in the On position until a solid stream of fuel flows out around the screw.
10. Tighten the screw and turn the key to the Off position.

Note: Normally, the engine should start after you bleed the fuel system. However, if the engine does not start, there may be air trapped between the injection pump and the injectors; refer to Bleeding the Air from the Injectors.

Bleeding Air from the Injectors

You should perform this procedure only after you have purged the air in the system while you prime the engine and it does not start. Refer to Bleeding the System

1. Loosen the pipe connection to the No. 1 nozzle and holder assembly.
2. Move the throttle to the Fast position.
3. Turn the key in the key switch to the Start position and watch the fuel flow around the connector. Turn the key to the Off position when you observe a solid flow of fuel.
4. Tighten the pipe connector securely.
5. Repeat this procedure for the remaining nozzles.

Draining the Fuel Tank

Service Interval: Every 400 hours/Yearly (whichever comes first)

Drain and clean the fuel tank if the fuel system becomes contaminated or if you plan to store the machine for

an extended period. Use fresh, clean fuel to flush out the tank.

1. Transfer the fuel from the tank into an approved fuel container using a siphon pump, or remove the tank from the machine and pour the fuel out of the tank fill spout into the fuel container.

   Note: If you remove the fuel tank, you will need to remove the fuel and return hoses from the tank before removing the tank.

2. Replace the fuel filter; refer to the Replacing the In-Tank Fuel Filter section.
3. Flush the tank with fresh, clean fuel, if necessary.
4. Install the tank if you removed it in step 1.
5. Fill the tank with fresh, clean fuel.

Servicing the Fuel Filters

The sprayer has 2 fuel filters, a fuel filter/water separator (located between the fuel pump and the carburetor) and an in-tank filter (located in the outlet tank fitting).

Servicing the Water Separator

Service Interval: Every 400 hours

Drain water or other contaminants from water separator (Figure 43) daily.

1. Place a clean container under the fuel filter.
2. Loosen the drain plug on the bottom of the filter canister.

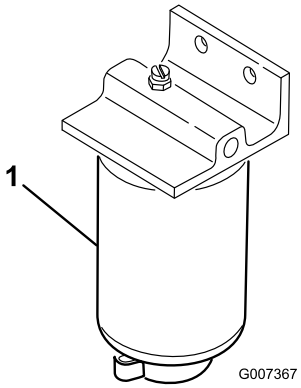

Figure 43

1. Water separator filter canister

3. Clean the area where the filter canister mounts.
4. Remove the filter canister and clean the mounting surface.
5. Lubricate the gasket on the filter canister with clean oil.
6. Install the filter canister by hand until the gasket contacts mounting surface, then rotate it an additional 1/2 turn.
7. Tighten the drain plug on the bottom of the filter canister.

Replacing the In-Tank Fuel Filter

Service Interval: Every 400 hours

Note: The fuel filter is a part of the standpipe assembly.

1. Set the parking brake, stop the pump, stop the engine, and remove the ignition key.
2. Loosen the clamp that secures the fuel line hose to the elbow fitting on the top of the fuel tank.
3. Disconnect the hose from the elbow fitting, and allow any fuel in the hose to drain into an approved fuel container.
4. Remove the old standpipe assembly from the fuel tank.
5. Install a new standpipe assembly obtained from your local Authorized Toro Dealer.

   Note: You may need a new grommet to secure the elbow fitting and standpipe assembly to the top of the fuel tank.

6. Connect the fuel line hose onto the elbow fitting, and secure the hose to the elbow fitting with a clamp.
7. Continue with the Draining the Fuel Tank procedure.

Electrical System Maintenance

Replacing the Fuses

There are 7 fuses and 1 empty slot in the electrical system located beneath the driver seat (Figure 44).

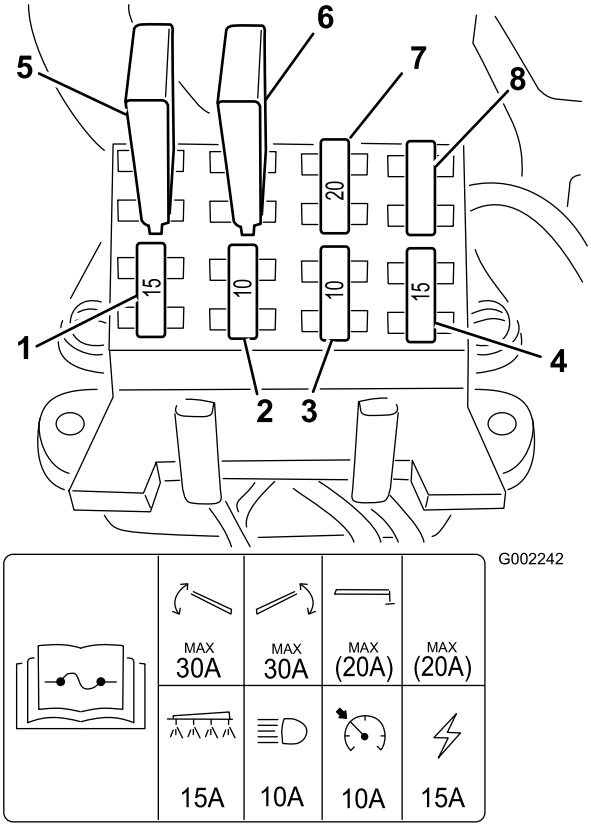

Figure 44

1. Spray system
2. Headlights
3. Cruise control
4. Power
5. Left boom actuator thermal breaker
6. Right boom actuator thermal breaker
7. Open slot, foam marker
8. Open slot

The two thermal breakers accommodate the left and right actuators independently. They can disrupt power to the actuators when overheated to avoid damaging the internal motor of the actuators.

Note: Once the thermal breaker has been tripped the system must be allowed to cool down before operation to resume.

Servicing the Battery

WARNING

CALIFORNIA
Proposition 65 Warning

Battery posts, terminals, and related accessories contain lead and lead compounds, chemicals known to the State of California to cause cancer and reproductive harm.
Wash hands after handling.

Always keep the battery clean and fully charged. Use a paper towel to clean the battery and battery box. If the battery terminals are corroded, clean them with a solution of 4 parts water and 1 part baking soda. Apply a light coating of grease to the battery terminals to prevent corrosion.

Voltage: 12 volts with 690 cold cranking Amps at 0 degrees F (-18 degrees C)

Removing the Battery

1. Position the sprayer on a level surface, set the parking brake, stop the pump, stop the engine, and remove the ignition key.
2. Remove the battery retainer and fasteners (Figure 45).

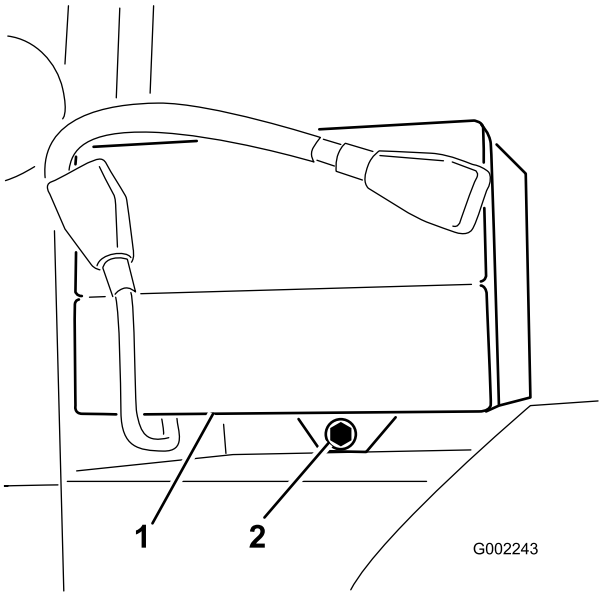

Figure 45

1. Battery
2. Battery retainer

3. Disconnect the negative (black) ground cable from the battery post.

⚠ WARNING

Incorrect battery cable routing could damage the sprayer and cables causing sparks. Sparks can cause the battery gasses to explode, resulting in personal injury.

- **Always *disconnect* the negative (black) battery cable before disconnecting the positive (red) cable.**
- **Always *reconnect* the positive (red) battery cable before reconnecting the negative (black) cable.**

⚠ WARNING

Battery terminals or metal tools could short against metal sprayer components causing sparks. Sparks can cause the battery gasses to explode, resulting in personal injury.

- **When removing or installing the battery, do not allow the battery terminals to touch any metal parts of the sprayer.**
- **Do not allow metal tools to short between the battery terminals and metal parts of the sprayer.**
- **Always keep the battery strap in place to protect and secure the battery.**

4. Disconnect the positive (red) cable from the battery post.
5. Remove the battery.

Installing the Battery

Service Interval: Every 50 hours

1. Set the battery on the battery box so that the battery posts are toward the back of the sprayer.
2. Connect the positive (red) cable to the positive (+) battery post and the negative (black) cable to the negative (–) battery post using the bolts and nuts. Slide the rubber boot over both battery posts.
3. Install the battery retainer and secure it with the fasteners you removed previously (Figure 45).

   Important: Always keep the battery retainer in place to protect and secure the battery.

Charging the Battery

Important: Always keep the battery fully charged. This is especially important to prevent battery damage when the temperature is below 32 degrees F (0 degrees C).

1. Remove the battery from the chassis; refer to Removing the Battery.
2. Connect a 3 to 4 amp battery charger to the battery posts. Charge the battery at a rate of 3 to 4 amperes for 4 to 8 hours (12 volts). **Do not overcharge the battery.**

   ⚠ WARNING

   Charging the battery produces gasses that can explode.

   Never smoke near the battery and keep sparks and flames away from battery.

3. Install the battery in the chassis; refer to Installing the Battery.

Storing the Battery

If the machine will be stored for more than 30 days, remove the battery and charge it fully. Either store it on the shelf or on the machine. Leave the cables disconnected if it is stored on the machine. Store the battery in a cool atmosphere to avoid quick deterioration of the charge in the battery. To prevent the battery from freezing, ensure that it is fully charged.

Drive System Maintenance

Check the Tire Pressure

Service Interval: Before each use or daily

Check the tire pressure every 8 hours or daily to ensure proper levels. Fill the tires to 18 psi (124 kPa). Also, check the tires for wear or damage.

Inspecting the Wheels/Tires

Service Interval: After the first 8 hours—Torque the wheel lug nuts.

Every 100 hours—Torque the wheel lug nuts.

Every 100 hours—Inspect the condition and wear of the tires.

Torque the front lug nuts to 55-75 ft-lb (75-102 N-m) and the rear lug nuts to 75-90 ft-lb (95-122 N-m).

Operating accidents, such as hitting curbs, can damage a tire or rim and also disrupt wheel alignment, so inspect tire condition after an accident.

Changing the Planetary Gearbox Fluid

Service Interval: After the first 8 hours

Every 400 hours

Change the planetary gearbox fluid in each rear wheel after the first 8 hours and then after every 400 hours thereafter.

Use high quality, SAE 85W-140 weight gear lube.

1. Position the sprayer on a level surface with the rear wheels positioned for draining as illustrated in Figure 46.

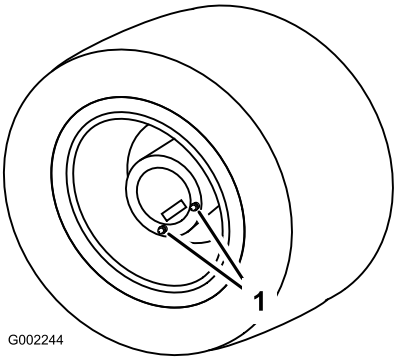

Figure 46

1. Drain plugs, positioned for draining

2. Set the parking brake, stop the pump, stop the engine, and remove the ignition key.
3. Place a pan under the drain plugs and remove them from the wheel (Figure 46).
4. Place a pan under the inner drain plug and remove it (Figure 47).

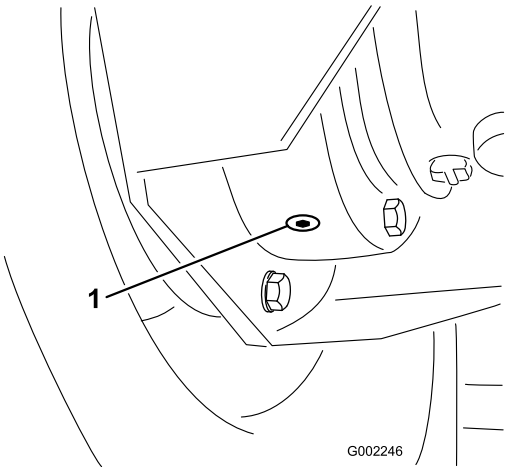

Figure 47

1. Inner drain plug

5. Move the vehicle slowly until the wheel is positioned for filling as illustrated in Figure 48

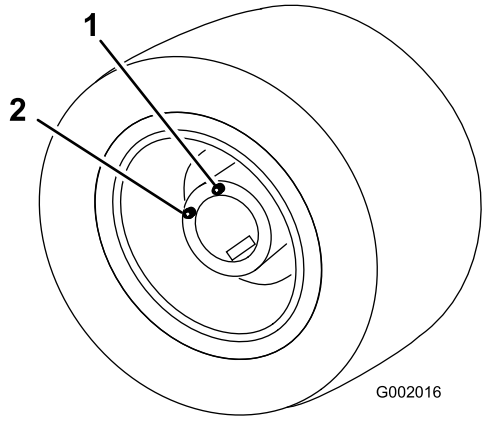

Figure 48

1. Upper hole, add fluid here 2. Lower hole

6. Set the parking brake, stop the pump, stop the engine, and remove the ignition key.
7. Pour SAE 85W-140 weight gear lube into the upper hole until it begins to come out of the lower hole.
8. Replace and tighten all drain plugs.
9. Repeat 3 through 9 for the other rear wheel.
10. Dispose of the used oil at a certified recycling center.

Adjusting the Front Wheel Toe-In

Service Interval: Every 200 hours/Yearly (whichever comes first)

The toe-in should be 0 to 1/8 inch (0 to 3 mm).

1. Check and fill all tires; refer to Checking Tire Pressure.
2. Measure the distance between both of the front tires at the axle height at both the front and rear of the front tires (Figure 49).

   The distance between the front of the tires should be 0 to 1/8 inch (0 to 3 mm) less than the distance between the back side of the front tires.

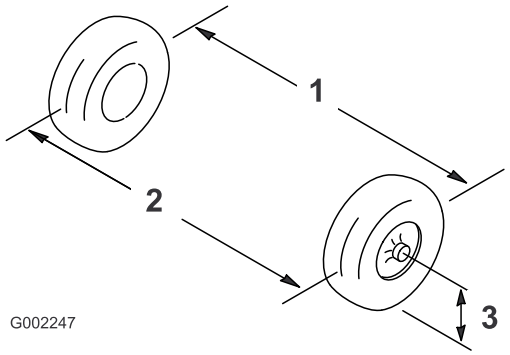

Figure 49

1. Tire center line-back
2. Tire center line-front
3. Axle center line

3. If the measurement does not fall within the specified range, loosen the jam nuts at both ends of the tie rod (Figure 50).

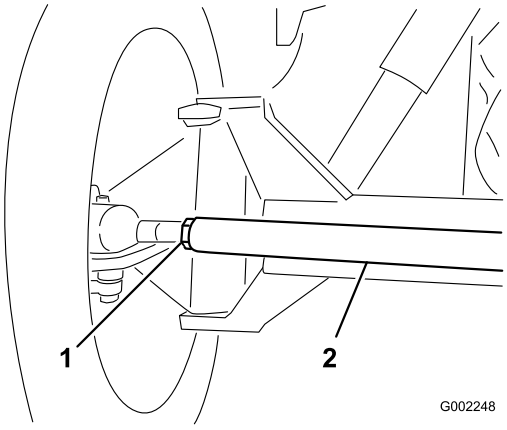

Figure 50

1. Jam nut 2. Tie rod

4. Rotate the tie rod to move the front of the tire inward or outward.
5. Tighten the tie rod jam nuts when the adjustment is correct.
6. Ensure that there is full travel of the steering wheel in both directions.

Cooling System Maintenance

Checking the Coolant Level

Service Interval: Before each use or daily

The cooling system is filled with a 50/50 solution of water and permanent ethylene glycol antifreeze. Check the level of coolant in the radiator and the expansion tank at the beginning of each day before starting the engine. The cooling system capacity is 5.5 qt (5.4 l).

⚠ CAUTION

If the engine has been running, the coolant may be hot and pressurized. If you open the radiator cap when the coolant is hot, it could spray out and severely burn you or bystanders.

Allow the engine to cool for at least 15 minutes before opening the radiator cap.

1. Position the sprayer on a level surface.
2. Set the parking brake, stop the pump, stop the engine, and remove the ignition key.
3. Carefully remove the radiator cap and the expansion tank cap (Figure 51).

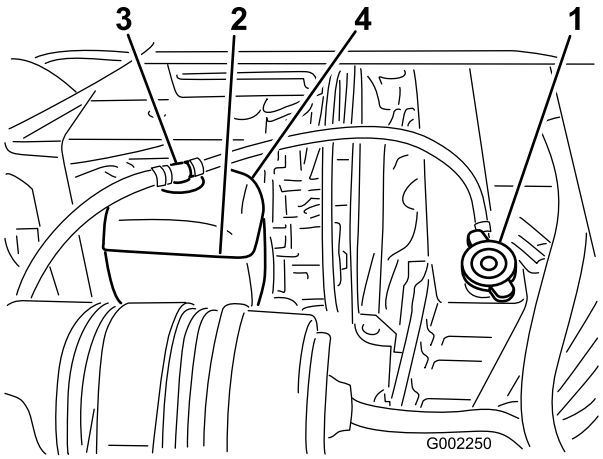

Figure 51

1. Radiator cap
2. Expansion tank
3. Expansion tank cap
4. Full line, expansion tank

4. Check the coolant level in the radiator and in the expansion tank.

   Note: The radiator should be filled to the top of the filler neck and the expansion tank filled to the Full mark.

5. If coolant level is low, remove the expansion tank cap and the radiator cap, and fill expansion tank to the Full mark and the radiator to the top of the filler neck. **Do not overfill the expansion tank.**

   Important: Do not use water only or an alcohol/methanol-based coolant.

6. Install the radiator cap and the expansion tank cap.

Servicing the Cooling System

Service Interval: Every 100 hours

Every 200 hours

Every 400 hours/Yearly (whichever comes first)

Clean the radiator fins of all debris using low-pressure compressed air or a soft brush. Clean them more often if needed. Also check all coolant hoses and replace any that are worn, leaking, or damaged.

Important: Do not spray water into a hot engine compartment.

Important: Do not add coolant to an overheated engine until the engine has fully cooled. Adding coolant to an overheated engine may crack the engine block.

Check the engine coolant as directed by the manufacturer. Use 5.8 qt (5.4 l) of a solution of 50% water and 50% permanent ethylene glycol antifreeze.

1. Position the sprayer on a level surface, set the parking brake, stop the pump, stop the engine, and remove the ignition key.

   ⚠ CAUTION

   If the engine has been running, the coolant may be hot and pressurized. If you open the radiator cap when the coolant is hot, it could spray out and severely burn you or bystanders.

   Allow the engine to cool for at least 15 minutes before opening the radiator cap. The radiator cap must be cool to the touch.

2. When the engine is cool, remove the radiator cap (Figure 52).

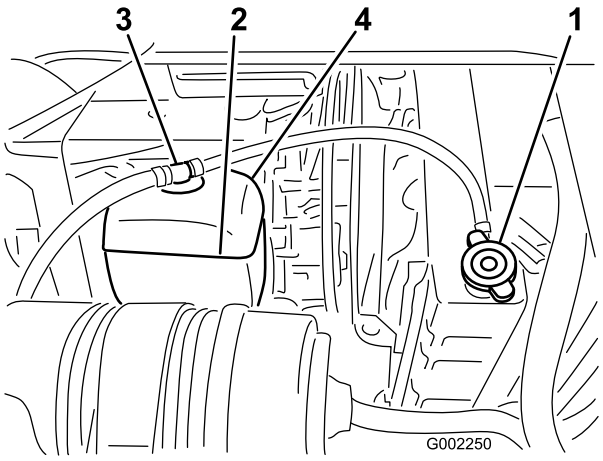

Figure 52

1. Radiator cap

3. Place a large drain pan under the radiator.
4. Open the drain (Figure 53) and drain the coolant into the pan.

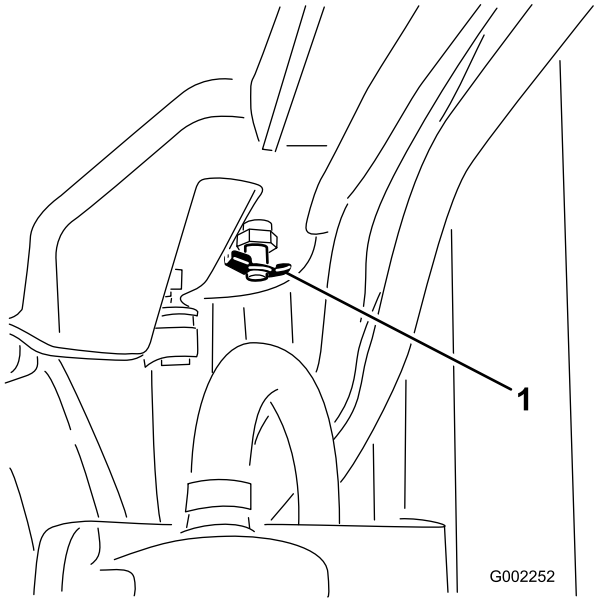

Figure 53

5. Close the drain.
6. Remove the radiator cap.
7. Slowly fill the radiator with coolant to approximately 1 inch (2.5 cm) below the sealing surface of the cap.

   Note: This will allow for the coolant to expand without it overflowing while the engine is warming up.
8. Use enough coolant to fill the engine and the system lines.
9. Start the engine with the cap loosely on the radiator.
10. Allow the engine to warm up until the thermostat opens.

   Note: This usually occurs between 175 and 190 degrees F.

⚠ CAUTION

As the engine continues to run, the coolant will become hot and pressurized. If you open the radiator cap when the coolant is hot, it could spray out and severely burn you or bystanders.

Wear protective clothing and avoid contact with hot coolant as you open the radiator cap.

11. Once the coolant has warmed up, top off the coolant level to the sealing surface of the cap and tighten the cap.
12. Open the recovery bottle cap and fill with coolant to the Cold position after you tighten the radiator cap.
13. Check the coolant levels after several shut down and start up cycles and top off the coolant as needed.

⚠ CAUTION

If the engine has been running, the coolant may be hot and pressurized. If you open the radiator cap when the coolant is hot, it could spray out and severely burn you or bystanders.

Allow the engine to cool for at least 15 minutes before opening the radiator cap. The radiator cap must be cool to the touch.

Brake Maintenance

Checking the Brakes

Service Interval: Before each use or daily

Before starting the sprayer, lightly press the brake pedal. If the pedal travels more than 1 inch (2.5 cm) before you feel resistance, adjust the brakes; refer to Adjusting the Brakes.

⚠ WARNING

If you operate the sprayer with poorly adjusted or worn brakes, you could lose control of the sprayer, resulting in serious injury or death to you or bystanders.

Always check the brakes before operating the sprayer and keep them properly adjusted and repaired.

Adjusting the Brakes

Check the brake adjustment daily. If the brake pedal travels more than 1 inch (2.5 cm) before you feel resistance, adjust the brakes.

1. Position the sprayer on a level surface, stop the pump, stop the engine, and remove the ignition key.
2. Set the parking brake.
3. Put the blocks under the wheels to prevent the machine from rolling.
4. Release the parking brake.
5. Loosen the front nuts on the brake cables under the front end of the sprayer (Figure 54).

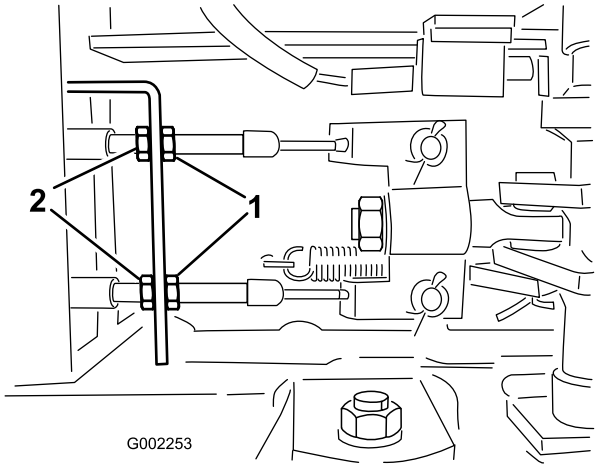

Figure 54

1. Front nuts
2. Rear nuts

6. Tighten the rear nuts equally until the brake pedal moves between 1/2 to 1 inch (1 to 2 cm) before you feel resistance (Figure 54).

   Important: Ensure that you tighten both rear nuts equally so that the threaded ends of the brake cables in front of the front nuts are the same length.

7. Tighten the front nuts.

Belt Maintenance

Servicing the Drive Belts

Service Interval: After the first 8 hours

Every 100 hours

Check the condition and tension of the alternator/cooling fan belt. Replace the belt as necessary.

1. Position the sprayer on a level surface, set the parking brake, stop the pump, stop the engine, and remove the ignition key.
2. Check the tension by depressing the belt midway between the alternator and the crankshaft pulleys with 22 lb (10 kg) of force.

   Note: The belt should deflect 0.39 to 0.47 inches (10 to 12 mm). If the deflection is not correct, go to 3. If it is correct, you may skip the remainder of this procedure and resume operating the sprayer.
3. Loosen the bolts that secure the brace to the engine and the bolt that secures the alternator to the brace (Figure 55).

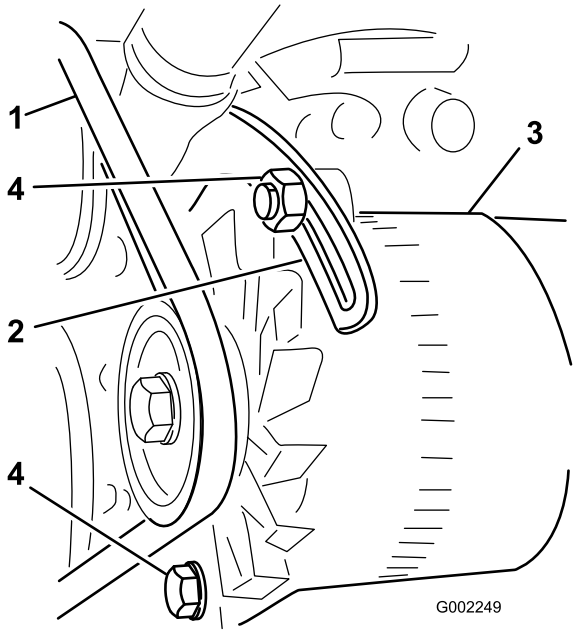

Figure 55

1. Alternator belt
2. Brace
3. Alternator
4. Bolts

4. Insert a pry bar between the alternator and the engine and pry on the alternator.
5. When you achieve the proper tension, tighten the alternator and the bolts to secure the adjustment.
6. Tighten the locknut to secure the adjustment.

Hydraulic System Maintenance

Checking the Hydraulic Fluid

Service Interval: Before each use or daily

1. Position the sprayer on a level surface, set the parking brake, stop the pump, stop the engine, and remove the ignition key.
2. Stop the pump, stop the engine, and remove the ignition key.
3. Clean the area around the hydraulic oil tank cap and remove it (Figure 56).

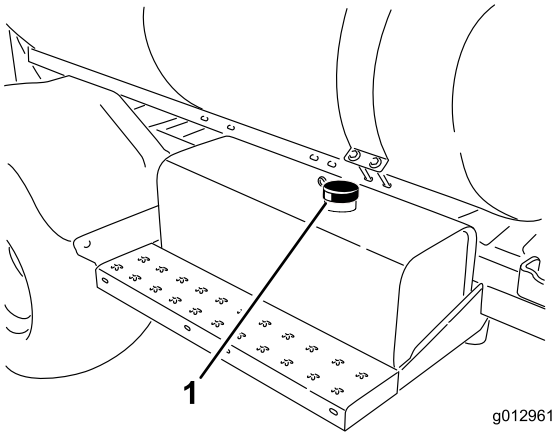

Figure 56

1. Hydraulic oil tank cap

Important: Be very careful not to get dirt or other contaminants into the opening when checking the oil.

4. Check the oil level by looking into the opening.

   The oil should be 2 inches (5 cm) below the bottom of the filler neck.

5. If the oil is low, fill the tank with Mobil DTE 15M hydraulic fluid or equivalent.
6. Install and secure the hydraulic oil tank cap.

Servicing the Hydraulic Oil

If the oil becomes contaminated, contact an Authorized Toro Distributor to have the system flushed.

Note: Contaminated oil looks milky or black when compared to clean oil.

Replacing the Hydraulic Oil Filter

Service Interval: After the first 5 hours

Every 400 hours/Yearly (whichever comes first)

Use the Toro replacement filter (See your *Parts Manual* for the correct part no.)

Important: Use of any other filter may void the warranty on some components.

⚠ WARNING

Hot hydraulic fluid can cause severe burns.

Allow the hydraulic oil to cool before performing any maintenance to the hydraulic system.

1. Position the sprayer on a level surface, set the parking brake, stop the pump, stop the engine, and remove the ignition key.
2. Clean the area around the filter mounting area (Figure 57).

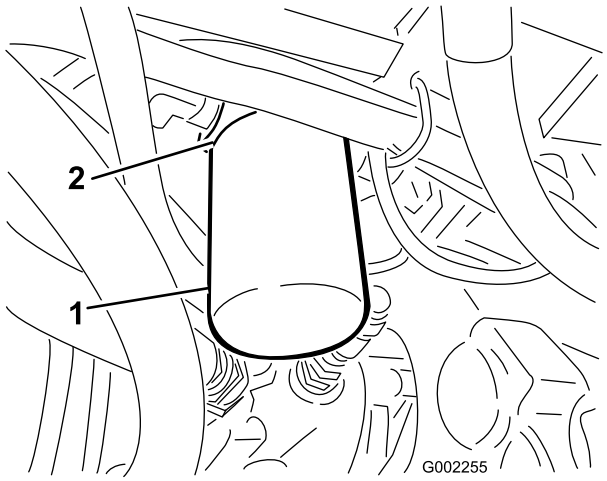

Figure 57

1. Hydraulic filter
2. Gasket

3. Place a drain pan under the filter.
4. Remove the filter (Figure 57).
5. Lubricate the new filter gasket (Figure 57).
6. Ensure that the filter mounting area is clean.
7. Screw the filter on until the gasket contacts the mounting plate, then tighten the filter one-half turn.
8. Start the engine and let it run for about two minutes to purge air from the system. Stop the engine and check the hydraulic oil level and for leaks.
9. Dispose of the used filter at a certified recycling center.

Changing the Hydraulic Oil

Service Interval: Every 400 hours/Yearly (whichever comes first)

Use 10.6 US gallons (40.1 l) of Mobil DTE 15M hydraulic fluid or equivalent.

Note: Mobil EAL Envirosyn 46H is a synthetic, biodegradeable oil and can be used as an alternative.

Important: Using any other oil may void the warranty on some components.

⚠ WARNING

Hot hydraulic fluid can cause severe burns.

Allow the hydraulic oil to cool before performing any maintenance to the hydraulic system.

1. Replace the hydraulic oil filter; refer to Replacing the Hydraulic Oil Filter.

2. Clean the area around one hydraulic hose fitting on the bottom of the hydraulic oil tank (Figure 58).

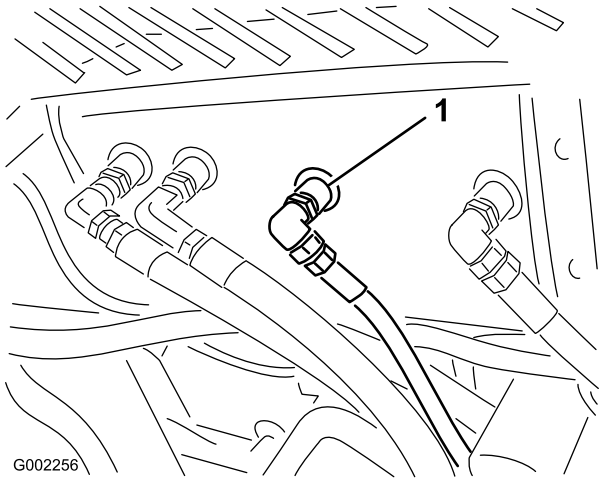

Figure 58

1. Hydraulic hose and fitting

3. Place a large pan under the fitting.
4. Remove the hose fitting from the tank, allowing the oil to drain into the pan (Figure 58).
5. Install the hose and fitting to the tank and tighten it securely.
6. Fill the hydraulic reservoir with approximately 10.6 US gallons (40.1 l) of Mobil DTE 15M hydraulic oil or equivalent.
7. Start the machine and run it at idle for 3 to 5 minutes to circulate the fluid and remove any air trapped in the system.
8. Stop the engine, check the hydraulic oil level, and check for leaks.
9. Dispose of the used oil at a certified recycling center.

Checking the Hydraulic Lines and Hoses

Inspect the hydraulic lines and hoses daily for leaks, kinked lines, loose mounting supports, wear, loose fittings, weather deterioration and chemical deterioration. Make all necessary repairs before operating.

⚠ WARNING

Hydraulic fluid escaping under pressure can penetrate skin and cause injury.

- **Ensure that all hydraulic fluid hoses and lines are in good condition and all hydraulic connections and fittings are tight before applying pressure to the hydraulic system.**
- **Keep your body and hands away from pin hole leaks or nozzles that eject high pressure hydraulic fluid.**
- **Use cardboard or paper to find hydraulic leaks.**
- **Safely relieve all pressure in the hydraulic system before performing any work on the hydraulic system.**
- **Get immediate medical help if fluid is injected into skin.**

Spray System Maintenance

⚠ WARNING

Chemical substances used in the spray system may be hazardous and toxic to you, bystanders, animals, plants, soils or other property.

- **Carefully read and follow the chemical warning labels and Material Safety Data Sheets (MSDS) for all chemicals used and protect yourself according to the chemical manufacturer's recommendations. For example, use appropriate Personal Protective Equipment (PPE) including face and eye protection, gloves, or other equipment to guard against personal contact with the chemical.**
- **Keep in mind that there may be more than one chemical used and information on each should be assessed.**
- ***Refuse to operate or work on the sprayer if this information is not available!***
- **Before working on a spray system make sure the system has been triple rinsed and neutralized according to the recommendations of the chemical manufacturer(s).**
- **Verify there is an adequate supply of clean water and soap nearby, and immediately wash off any chemicals that contact you.**

Inspecting the Hoses

Service Interval: Every 200 hours

Every 400 hours/Yearly (whichever comes first)

Examine each hose in the spray system for cracks, leaks or other damage. At the same time, inspect the connections and fittings for similar damage. Replace any hoses and fittings if damaged.

Pump Maintenance

Inspecting the Pump

Service Interval: Every 400 hours/Yearly (whichever comes first)—Inspect the pump diaphragm and replace if necessary. (see an Authorized Toro Service Distributor)

Every 400 hours/Yearly (whichever comes first)—Inspect the pressure dampener bladder and replace if necessary. (see an Authorized Toro Service Distributor)

Every 400 hours/Yearly (whichever comes first)—Inspect the pump check valves and replace if necessary. (see an Authorized Toro Service Distributor)

Note: The following machine components are considered parts subject to consumption through use unless found defective and are not covered by the Warranty associated with this machine.

Have an Authorized Toro Service Distributor check following internal pump components for damage:

- Pump diaphragm
- Pressure dampener bladder
- Pump check valves assemblies

Replace any components if necessary.

Adjusting the Air Pressure in Dampener

The air pressure in the dampener on the pump is set at 15 psi (1 bar) by the manufacturer. The recommended pressure in the dampener is 1/3 of the spraying pressure. If using a spray pressure greater than 45 psi (3.1 bar) adjust the dampener accordingly.

Adjusting the Boom Actuator

Service Interval: Every 400 hours

1. Position the sprayer on a level surface, lower the booms into the spray position.
2. Set the parking brake, stop the pump, stop the engine, and remove the ignition key
3. Attempt to lift the boom by applying a moderate amount of pressure (just enough to lift the boom manually) while observing the actuator rod. If the actuator rod exhibits movement refer to below.
4. Repeat the procedure for the opposing boom.

If the actuator rod exhibits an axial movement (travels into or out of the cylinder) greater than 0.085-0.100 inch (2.16-2.54 mm), you may wish to bleed the air from the hydraulic oil.

Refer to the *Service Manual* for instructions on how to bleed air from the actuators or contact an Authorized Toro Service Distributor.

Emergency Manual Operation of the Boom Actuators

Note: Determine the left and right sides of the machine from the normal operating position.

⚠ DANGER

Use of the manual relief valve may cause the boom to move suddenly and cause injury to you or others.

- **Take caution and adjust the manual relief valve slowly.**
- **Ensure the surrounding area is clear and no one is inside the operating range of the boom.**

⚠ CAUTION

Adjusting the manual relief valve with electrical power present could cause the actuator operate irregularly and cause injury to you or others.

***Do not* use the manual relief valve while electrical power is being supplied to the actuator.**

In case of an emergency such that the boom must be moved and no 12V DC power source is available, the manual relief valve can be used to relieve pressure within the actuator and allow the booms to be moved manually.

Important: The manual valve must not be loosened more than 4 turns. Turning the valve more than 4 turns may cause the valve to come off completely allowing hydraulic oil to spill out.

1. Locate the manual relief valve on the actuator for each boom. The manual relief valve is the smaller valve and is only on one side of the actuator body (Figure 59).

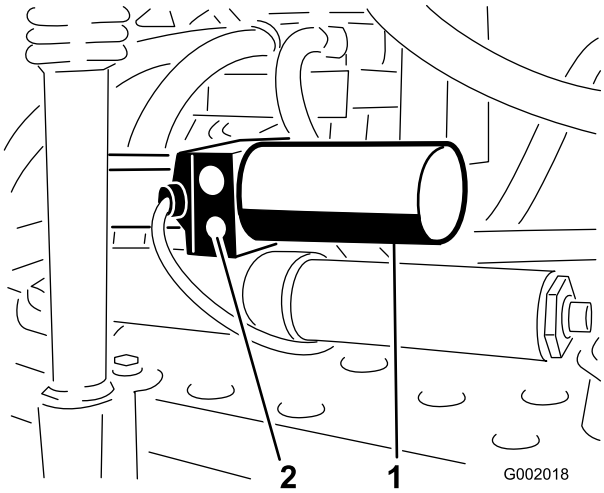

Figure 59

1. Actuator, right boom
2. Manual relief valve

Note: Due to the opposing orientation of actuators in respect to each other the manual relief valve is on the forward face of the left boom actuator and the rear face of the right boom actuator.

2. Use a hexagonal wrench to loosen the manual relief valve **no more** than 2-3 turns. The cylinder should start stroking manually or by external pressure at this time.
3. Once the original position of the actuator is recovered, close the manual relief valve. Torque the valve to 1.1-2.1 ft-lb (1.5-2.9 N-m).

Inspecting the Nylon Pivot Bushings

Service Interval: Every 400 hours/Yearly (whichever comes first)

1. Position the sprayer on a level surface, set the parking brake, stop the pump, stop the engine, and remove the ignition key.
2. Extend the booms to the spray position and support the booms using stands or straps from a lift.
3. With the weight of the boom supported, remove the bolt and nut securing the pivot pin to the boom assembly (Figure 60). Remove the pivot pin.

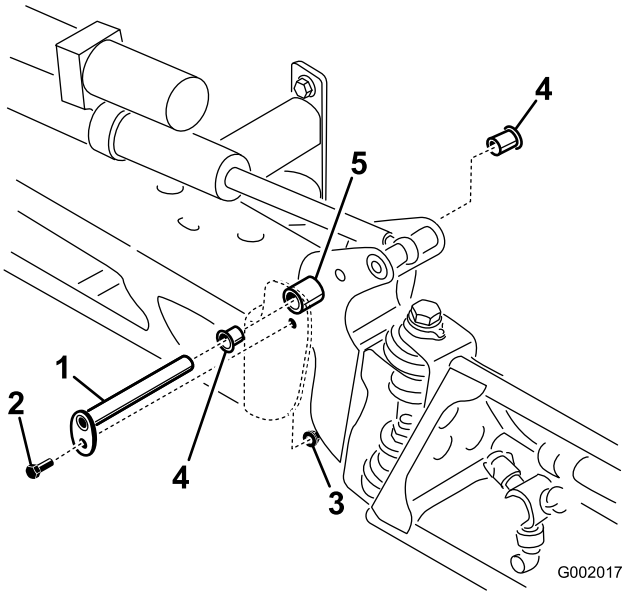

Figure 60

1. Pivot pin
2. Bolt
3. Nut
4. Nylon bushing
5. Pivot bracket

4. Remove the boom and pivot bracket assembly from the center frame to access the nylon bushings.

5. Remove and inspect the nylon bushings from the front and back sides of the pivot bracket (Figure 60). Replace any damaged bushings.
6. Place a small amount of oil on the nylon bushings and install them into pivot bracket.
7. Install the boom and pivot bracket assembly into the center frame, aligning the openings (Figure 60).
8. Install the pivot pin and secure it with the bolt and nut removed previously.

Repeat the procedure for each boom.

Cleaning

Cleaning the Suction Strainer

Service Interval: Before each use or daily

1. Position the sprayer on a level surface, set the parking brake, stop the pump, stop the engine, and remove the ignition key.
2. Remove the retainer from the red fitting attached to the large hose on the top of the tank (Figure 61).

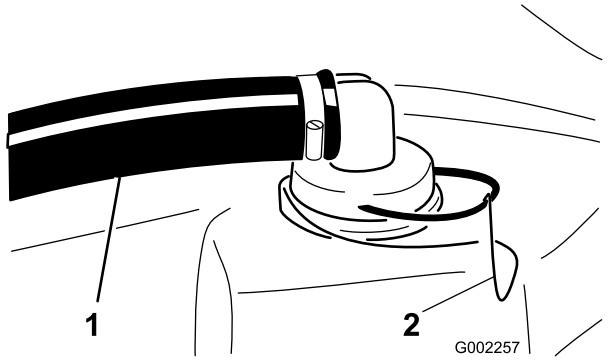

Figure 61

1. Suction hose
2. Retainer

3. Disconnect the hose from the tank (Figure 61).
4. Pull the suction strainer out of the hole (Figure 62).

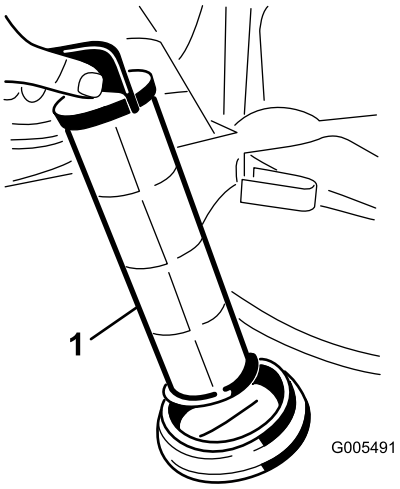

Figure 62

1. Suction strainer

5. Clean the suction strainer with clean running water.
6. Replace the suction strainer, seating it fully into the hole.
7. Connect the hose to the top of the tank and secure it with the retainer.

Storage

1. Position the sprayer on a level surface, set the parking brake, stop the pump, stop the engine, and remove the ignition key.
2. Clean dirt and grime from the entire machine, including the outside of the engine's cylinder head fins and blower housing.

   Important: You can wash the machine with mild detergent and water. *Do not* use *high pressure water* to wash the machine. Pressure washing may damage the electrical system or wash away necessary grease at friction points. Avoid excessive use of water, especially near the control panel, lights, engine, and the battery.
3. Clean the spray system; refer to the Cleaning section.
4. Add a rust inhibiting, non-alcohol based, RV antifreeze solution to the system and run the pump for a few minutes to circulate it through the system, then drain the spray system as completely as possible.
5. Use the boom lift switches to raise the booms. Raise the booms until have moved completely into boom transport cradle forming the "X" transport position and the boom cylinders are fully retracted. Make sure the boom cylinders are fully retracted to prevent actuator rod damage.
6. Inspect the brakes; refer to Inspecting the Brakes in the Brake Maintenance section.
7. Service the air cleaner; refer to Servicing the Air Cleaner in the Engine Maintenance section.
8. Grease the sprayer; refer to the Lubrication section.
9. Change the crankcase oil; refer to Servicing Engine Oil in the Engine Maintenance section.
10. Check the tire pressure; refer to Checking the Tire Pressure in the Drive System Maintenance section.
11. For storage over 30 days, prepare the fuel system as follows:

    A. Start the engine and run it at idle speed for approximately 2 minutes.

    B. Stop the engine.

    C. Flush the fuel tank with fresh, clean fuel.

    D. Secure all the fuel system fittings.
12. Use the electric starter to crank the engine and distribute the oil inside the cylinder.
13. Remove the battery from the chassis, check the electrolyte level, and charge it fully; refer to Servicing the Battery in the Electrical System Maintenance section.

    Note: Do not connect the battery cables to the battery posts during storage.

    Important: The battery must be fully charged to prevent it from freezing and being damaged at temperatures below 32 degrees F (0 degrees C). A fully charged battery maintains its charge for about 50 days at temperatures lower than 40 degrees F (4 degrees C). If the temperatures will be above 40 degrees F (4 degrees C), check the water level in the battery and charge it every 30 days.
14. Check and tighten all bolts, nuts, and screws. Repair or replace any part that is damaged.
15. Check the condition of all spray hoses, replacing any that are damaged or worn.
16. Tighten all hose fittings.
17. Paint all scratched or bare metal surfaces.

    Paint is available from your Authorized Service Dealer.
18. Store the machine in a clean, dry garage or storage area.
19. Remove the ignition key and put it in a safe place out of the reach of children.
20. Cover the machine to protect it and keep it clean.

Troubleshooting

Troubleshooting the Engine and Vehicle

Problem	Possible Cause	Corrective Action
The starter does not crank.	1. The range selector is in a gear other than Neutral. 2. The electrical connections are corroded or loose. 3. A fuse is blown or loose. 4. The battery is discharged. 5. The safety interlock system is malfunctioning. 6. A broken starter or starter solenoid. 7. Seized internal engine components.	1. Press the brake pedal and move the range selector to the Neutral position. 2. Check the electrical connections for good contact. 3. Correct or replace fuse. 4. Charge or replace the battery. 5. Contact your Authorized Service Dealer. 6. Contact your Authorized Service Dealer. 7. Contact your Authorized Service Dealer.
The engine cranks, but will not start.	1. The fuel tank is empty. 2. Dirt, water, or stale fuel is in the fuel system. 3. Clogged fuel line. 4. The kill relay is not energized. 5. The ignition is broken.	1. Fill with fresh fuel. 2. Drain and flush the fuel system; add fresh fuel. 3. Clean or replace. 4. Contact your Authorized Service Dealer. 5. Contact your Authorized Service Dealer.
The engine starts, but does not keep running.	1. The fuel tank vent is restricted. 2. Dirt or water in the fuel system. 3. The fuel filter is clogged. 4. A fuse is blown or loose. 5. The fuel pump is broken. 6. The carburetor is broken. 7. Loose wires or poor connections. 8. The cylinder head gasket is broken.	1. Replace the fuel cap. 2. Drain and flush the fuel system; add fresh fuel. 3. Replace the fuel filter. 4. Correct or replace fuse. 5. Contact your Authorized Service Dealer. 6. Contact your Authorized Service Dealer. 7. Check and tighten wire connections. 8. Contact your Authorized Service Dealer.
The engine runs, but knocks or misses.	1. Dirt, water, or stale fuel is in the fuel system. 2. A spark plug lead is loose. 3. A spark plug is broken. 4. Loose wires or poor connections. 5. Engine overheating.	1. Drain and flush the fuel system; add fresh fuel. 2. Reconnect the spark plug lead. 3. Replace the spark plug. 4. Check and tighten wire connections. 5. See Engine Overheats.
The engine will not idle.	1. The fuel tank vent is restricted. 2. Dirt, water, or stale fuel is in the fuel system. 3. A spark plug is damaged or broken. 4. Carburetor idle passages are plugged. 5. The idle speed adjusting screw is incorrectly set. 6. The fuel pump is broken. 7. Low compression.	1. Replace the fuel cap. 2. Drain and flush the fuel system; add fresh fuel. 3. Replace the spark plug. 4. Contact your Authorized Service Dealer. 5. Contact your Authorized Service Dealer. 6. Contact your Authorized Service Dealer. 7. Contact your Authorized Service Dealer.

Problem	Possible Cause	Corrective Action
	8. The air cleaner element is dirty.	8. Clean or replace.
The engine overheats.	1. The crankcase oil level is incorrect. 2. Excessive loading. 3. The air intake screens are dirty. 4. The cooling fins and air passages under the engine blower housing and/or the rotating air intake screen are plugged. 5. The fuel mixture is lean.	1. Fill or drain to the full mark. 2. Reduce load; use lower ground speed. 3. Clean with every use. 4. Clean with every use. 5. Contact your Authorized Service Dealer.
The engine loses power.	1. The crankcase oil level is incorrect. 2. The air cleaner element is dirty. 3. Dirt, water, or stale fuel is in the fuel system. 4. The engine is overheated. 5. A spark plug is damaged or dirty. 6. The vent hole in the fuel tank vent fitting is plugged. 7. Low compression.	1. Fill or drain to the full mark. 2. Clean or replace. 3. Drain and flush the fuel system; add fresh fuel. 4. See Engine Overheats. 5. Replace the spark plug. 6. Replace the fuel cap. 7. Contact your Authorized Service Dealer.
Abnormal vibration or noise.	1. The engine mounting bolts are loose. 2. There is a problem with the engine.	1. Tighten the engine mounting bolts. 2. Contact your Authorized Service Dealer.
The machine will not operate or is sluggish in either direction because the engine bogs down or stalls.	1. The parking brake is set.	1. Release the parking brake.
The machine will not operate in either direction.	1. The range selector is in the Neutral position. 2. The parking brake was not released or the parking brake is not releasing. 3. The transmission is broken. 4. The control linkage needs adjustment or replacement. 5. The drive shaft or wheel hub key has been damaged.	1. Press the brake and shift the range selector into a gear. 2. Release the parking brake or check the linkage. 3. Contact your Authorized Service Dealer. 4. Contact your Authorized Service Dealer. 5. Contact your Authorized Service Dealer.

Troubleshooting the Spray System

Problem	Possible Cause	Corrective Action
A boom section does not spray.	1. The electrical connection on the boom valve is dirty or disconnected. 2. Blown fuse 3. Pinched hose 4. A boom by-pass valve is improperly adjusted. 5. Damaged boom valve 6. Damaged electrical system	1. Turn the valve off manually. Disconnect the electrical connector on the valve and clean all leads, then reconnect it. 2. Check the fuses and replace them as necessary. 3. Repair or replace the hose. 4. Adjust the boom by-pass valves. 5. Contact your Authorized Service Dealer. 6. Contact your Authorized Service Dealer.

Problem	Possible Cause	Corrective Action
A boom section does not turn off.	1. The valve is damaged.	1. Stop the spray system and pump and turn off the sprayer. Remove the retainer from under the boom valve and pull out the motor and stem. Inspect all parts and replace any that appear damaged.
A boom valve is leaking	1. An O-ring is deteriorated.	1. Stop the spray system and pump and turn off the sprayer. Disassemble the valve and replace the O-rings.
A pressure drop occurs when you turn on a boom.	1. The boom bypass valve is improperly adjusted. 2. There is an obstruction in the boom valve body. 3. A nozzle filter is damaged or clogged.	1. Adjust the boom bypass valve. 2. Remove the inlet and outlet connections to the boom valve and remove any obstructions. 3. Remove and inspect all nozzles.
Boom actuator is not operating properly.	1. A thermal breaker in the fuse block responsible for powering the actuator has tripped due to overheating. 2. A thermal breaker in the boom actuator responsible for powering the actuator has tripped or malfunctioned.	1. Wait for the system to cool down before resuming operation. If the thermal breakers trip repeatedly, contact your Authorized Service Dealer. 2. Contact your Authorized Service Dealer.

Schematics

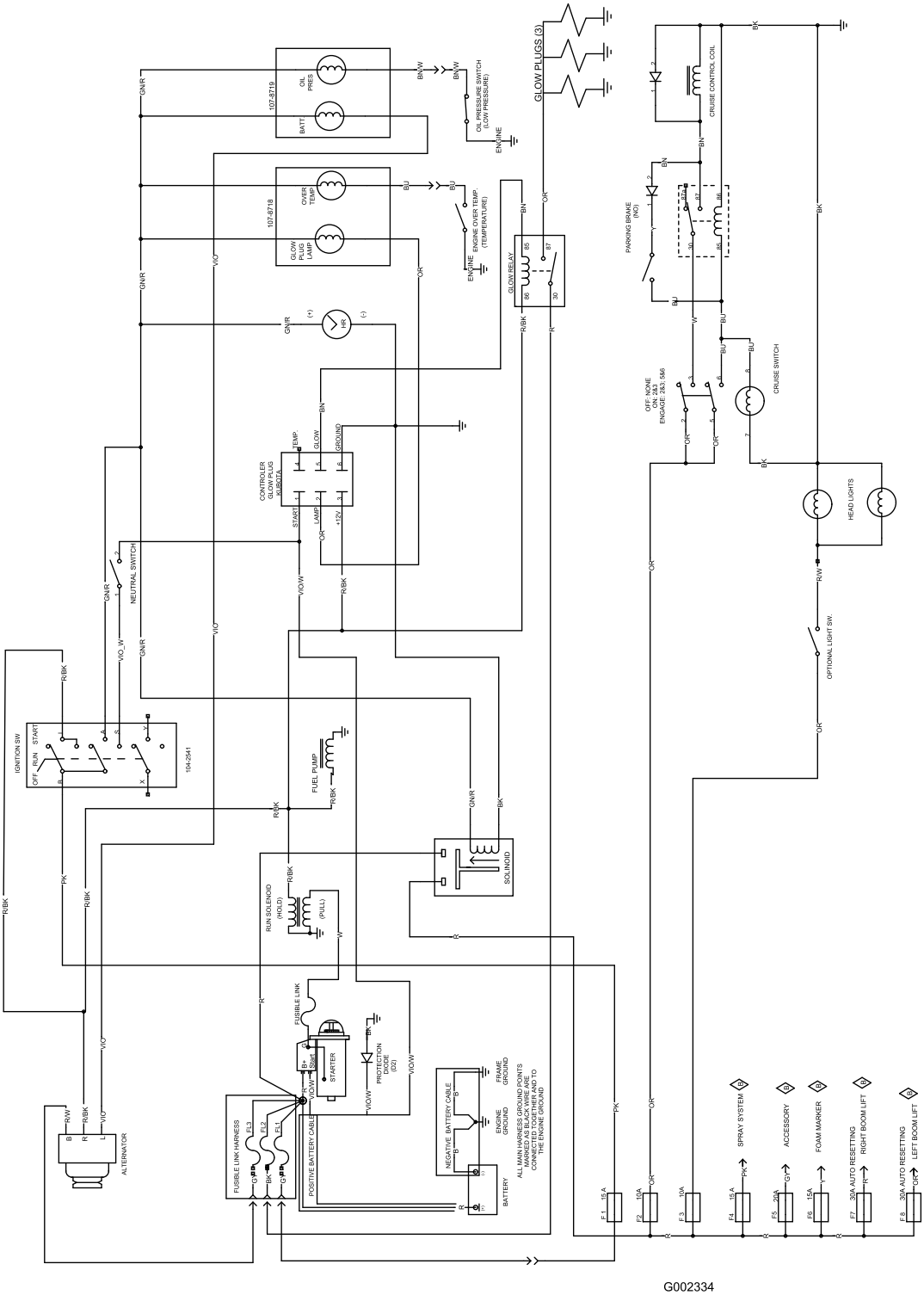

G002334

Electrical Schematics, Vehicle (Rev. B)

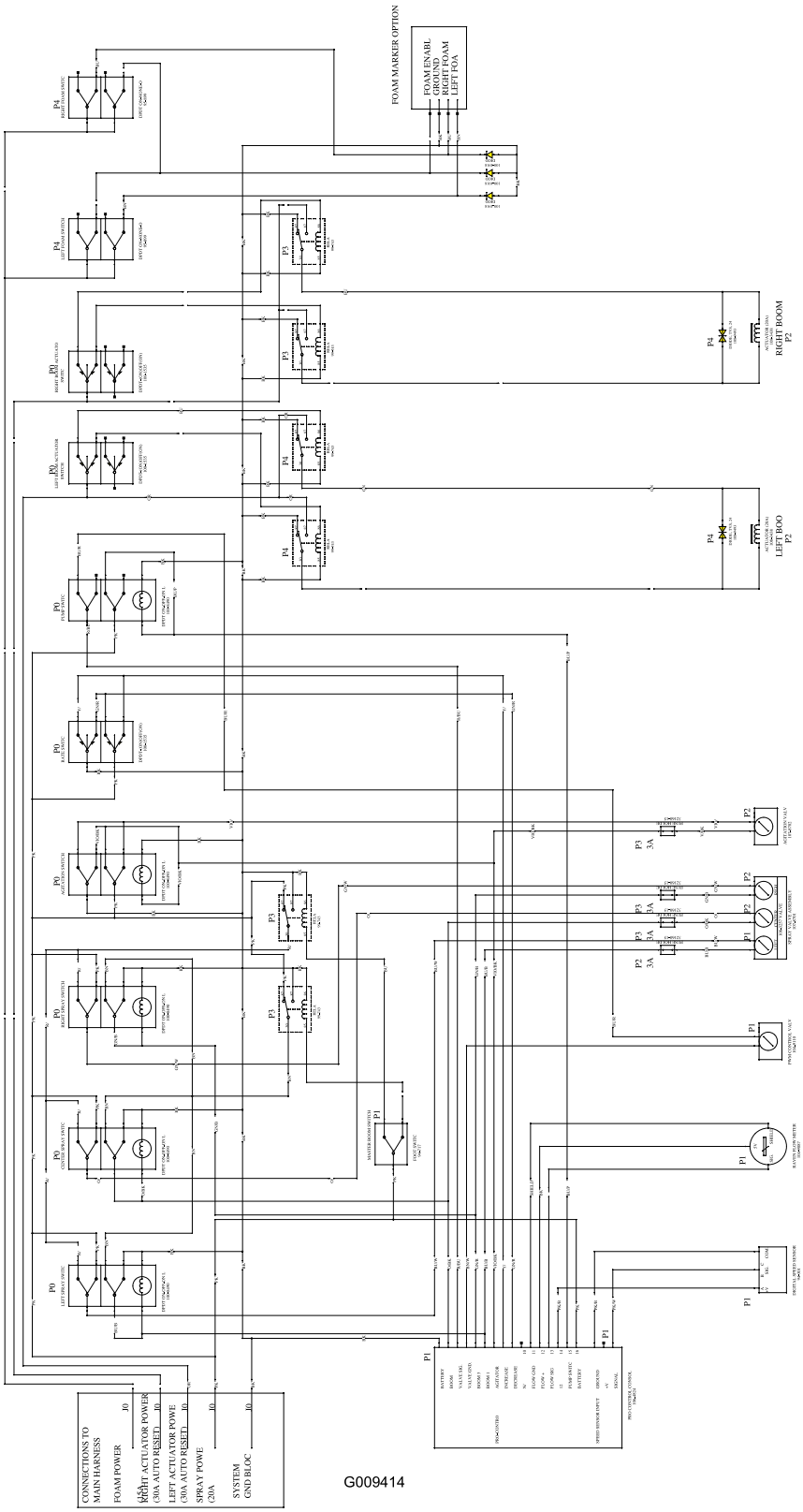

Electrical Schematic, Spray System (Rev. A)

Notes:

The Toro Total Coverage Guarantee

A Limited Warranty

Conditions and Products Covered

The Toro® Company and its affiliate, Toro Warranty Company, pursuant to an agreement between them, jointly warrant your Toro Commercial product ("Product") to be free from defects in materials or workmanship for two years or 1500 operational hours*, whichever occurs first. This warranty is applicable to all products with the exception of Aerators (refer to separate warranty statements for these products). Where a warrantable condition exists, we will repair the Product at no cost to you including diagnostics, labor, parts, and transportation. This warranty begins on the date the Product is delivered to the original retail purchaser.
* Product equipped with an hour meter.

Instructions for Obtaining Warranty Service

You are responsible for notifying the Commercial Products Distributor or Authorized Commercial Products Dealer from whom you purchased the Product as soon as you believe a warrantable condition exists. If you need help locating a Commercial Products Distributor or Authorized Dealer, or if you have questions regarding your warranty rights or responsibilities, you may contact us at:

Commercial Products Service Department
Toro Warranty Company
8111 Lyndale Avenue South
Bloomington, MN 55420-1196
E-mail: commercial.warranty@toro.com

Owner Responsibilities

As the Product owner, you are responsible for required maintenance and adjustments stated in your Operator's Manual. Failure to perform required maintenance and adjustments can be grounds for disallowing a warranty claim.

Items and Conditions Not Covered

Not all product failures or malfunctions that occur during the warranty period are defects in materials or workmanship. This warranty does not cover the following:

- Product failures which result from the use of non-Toro replacement parts, or from installation and use of add-on, or modified non-Toro branded accessories and products. A separate warranty may be provided by the manufacturer of these items.
- Product failures which result from failure to perform recommended maintenance and/or adjustments. Failure to properly maintain your Toro product per the Recommended Maintenance listed in the *Operator's Manual* can result in claims for warranty being denied.
- Product failures which result from operating the Product in an abusive, negligent or reckless manner.
- Parts subject to consumption through use unless found to be defective. Examples of parts which are consumed, or used up, during normal Product operation include, but are not limited to, brakes pads and linings, clutch linings, blades, reels, bed knives, tines, spark plugs, castor wheels, tires, filters, belts, and certain sprayer components such as diaphragms, nozzles, and check valves, etc.
- Failures caused by outside influence. Items considered to be outside influence include, but are not limited to, weather, storage practices, contamination, use of unapproved coolants, lubricants, additives, fertilizers, water, or chemicals, etc.
- Normal noise, vibration, wear and tear, and deterioration.
- Normal "wear and tear" includes, but is not limited to, damage to seats due to wear or abrasion, worn painted surfaces, scratched decals or windows, etc.

Parts

Parts scheduled for replacement as required maintenance are warranted for the period of time up to the scheduled replacement time for that part. Parts replaced under this warranty are covered for the duration of the original product warranty and become the property of Toro. Toro will make the final decision whether to repair any existing part or assembly or replace it. Toro may use remanufactured parts for warranty repairs.

Note Regarding Deep Cycle Battery Warranty:

Deep cycle batteries have a specified total number of kilowatt-hours they can deliver during their lifetime. Operating, recharging, and maintenance techniques can extend or reduce total battery life. As the batteries in this product are consumed, the amount of useful work between charging intervals will slowly decrease until the battery is completely worn out. Replacement of worn out batteries, due to normal consumption, is the responsibility of the product owner. Battery replacement may be required during the normal product warranty period at owner's expense.

Maintenance is at Owner's Expense

Engine tune-up, lubrication cleaning and polishing, replacement of Items and Conditions Not Covered filters, coolant, and completing Recommended Maintenance are some of the normal services Toro products require that are at the owner's expense.

General Conditions

Repair by an Authorized Toro Distributor or Dealer is your sole remedy under this warranty.

Neither The Toro Company nor Toro Warranty Company is liable for indirect, incidental or consequential damages in connection with the use of the Toro Products covered by this warranty, including any cost or expense of providing substitute equipment or service during reasonable periods of malfunction or non-use pending completion of repairs under this warranty. Except for the Emissions warranty referenced below, if applicable, there is no other express warranty.

All implied warranties of merchantability and fitness for use are limited to the duration of this express warranty. Some states do not allow exclusions of incidental or consequential damages, or limitations on how long an implied warranty lasts, so the above exclusions and limitations may not apply to you.

This warranty gives you specific legal rights, and you may also have other rights which vary from state to state.

Note regarding engine warranty:

The Emissions Control System on your Product may be covered by a separate warranty meeting requirements established by the U.S. Environmental Protection Agency (EPA) and/or the California Air Resources Board (CARB). The hour limitations set forth above do not apply to the Emissions Control System Warranty. Refer to the Engine Emission Control Warranty Statement printed in your *Operator's Manual* or contained in the engine manufacturer's documentation for details

Countries Other than the United States or Canada

Customers who have purchased Toro products exported from the United States or Canada should contact their Toro Distributor (Dealer) to obtain guarantee policies for your country, province, or state. If for any reason you are dissatisfied with your Distributor's service or have difficulty obtaining guarantee information, contact the Toro importer. If all other remedies fail, you may contact us at Toro Warranty Company.