Form No. 3359-473 Rev B

Foam Marker Kit

for Multi-Pro® 1200, 1250, 5600, and 5700 Turf Sprayers and Workman® 200 Spray Systems

Model No. 41236—Serial No. 00001 and Up

Installation Instructions

Note: Determine the left and right sides of the machine from the normal operating position.

Safety

Safety and Instructional Decals

Safety decals and instructions are easily visible to the operator and are located near any area of potential danger. Replace any decal that is damaged or lost.

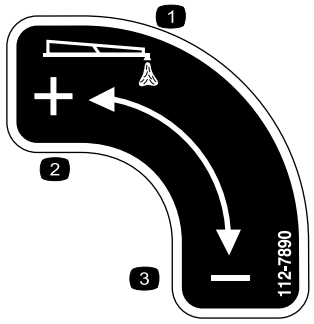

112-7890

1. Foam output
2. Increase
3. Decrease

© 2010—The Toro® Company
8111 Lyndale Avenue South
Bloomington, MN 55420

Register at www.Toro.com.

Original Instructions (EN)
Printed in the USA
All Rights Reserved

Installation

Loose Parts

Use the chart below to verify that all parts have been shipped.

Procedure	Description	Qty.	Use
2	Foam marker tank Tank cap, black	1 1	Assemble the foam marker tank.
3	Tube clamp, blue Tube clamp, white Screw (M6) Washer (M6)	3 3 4 4	Assemble the tank to the bracket.
4	Carriage bolt, 1200 series (3/8 x 1-1/4 inches) Locknut, 1200 series and Workman 200 (3/8 inch) Carriage bolt, 5700-D (5/16 x 1 inch) Locknut, 5700-D (5/16 inch) Bolt, Workman 200 (3/8 x 1-1/4 inches)	4 4 4 4 4	Install the tank and bracket.
5	Foam hose Plastic ties	1 8	Route the foam hoses.
6	Wiring harness, foam marker Plastic tie	1 4	Install the wiring harness.
7	Hose clamps (blue) Hose clamps (white) Brackets Spacers Set screws Mounting rod Foam nozzle assemblies	2 2 4 4 4 2 2	Install the foam nozzles.
8	Regulating valve, cap mount Regulating valve, dashboard mount Decal, 112-7890	1 1 1	Install the foam control valve and connect the hoses.
9	Rocker switch Fuse, 15-amp	2 1	Install the switches and fuse.

Separate instructions for the installation of the foam marker kit are denoted in each step of the Setup where specific procedures deviate from one machine to another. Please look for the heading describing instructions specific to the machine you are working with before proceeding with each step of the Setup.

This foam marker kit requires a mounting bracket specifically designed for your machine. Before installing this kit, contact an Authorized Toro Dealer to obtain the correct mounting bracket.

1

Preparing the Machine

No Parts Required

Procedure

1. Position the sprayer on a level surface, set the parking brake, and stop the pump.
2. Lower the booms to the spray position.
3. Stop the engine and remove the ignition key.

2

Assembling the Foam Marker Tank

Parts needed for this procedure:

1	Foam marker tank
1	Tank cap, black

Procedure

1. Locate the foam marker tank and black cap with filter tube in loose parts.
2. Remove any debris inside the tank.
3. Install the cap to the tank assembly:
   A. Lower the filter tube into the large, threaded opening in the tank.
   B. Compress the wishbone stop on the tube just enough to fit through the threaded opening.
   C. Screw the tank cap onto threaded opening.

3

Assembling the Tank to the Bracket

Parts needed for this procedure:

3	Tube clamp, blue
3	Tube clamp, white
4	Screw (M6)
4	Washer (M6)

Installing the Foam Marker Tank Assembly for 1200 Series Sprayers

Place the foam tank assembly on the mounting bracket as shown in Figure 1.

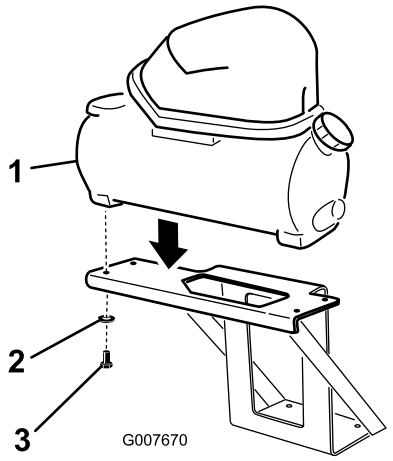

Figure 1

1. Foam marker tank
2. Washer
3. Screw (M6)

Install 4 screws (M6) and 4 washers (M6) up through the mounting bracket platform to the underside of the foam marker tank assembly. Tighten all screws (45 to 61 lb-in) to secure the tank in place.

Installing the Foam Marker Tank Assembly for 5700-D Sprayers

1. Place the foam tank assembly on the mounting bracket as shown (Figure 2).

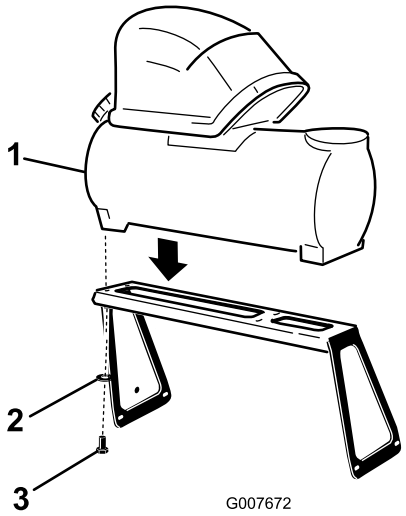

Figure 2

1. Foam marker tank
2. Washer
3. Screw (M6)

2. Install 4 screws (M6) and 4 washers (M6) up through the mounting bracket platform to the underside of the foam marker tank assembly. Tighten all screws (45-61 lb-in) to secure the tank in place.

Installing the Foam Marker Tank Assembly for Workman 200 Sprayer Systems

1. Place the foam tank assembly on the mounting bracket as shown (Figure 3).

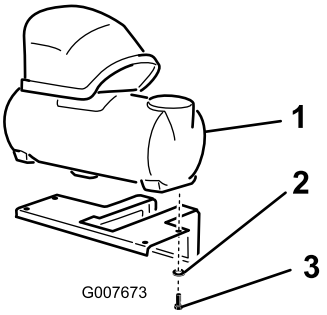

Figure 3

1. Foam marker tank
2. Washer
3. Screw (M6)

2. Install 4 screws (M6) and 4 washers (M6) up through the mounting bracket platform to the underside of the foam marker tank assembly. Tighten all screws (45-61 lb-in) to secure the tank in place.

4

Installing the Tank and Bracket

Parts needed for this procedure:

4	Carriage bolt, 1200 series (3/8 x 1-1/4 inches)
4	Locknut, 1200 series and Workman 200 (3/8 inch)
4	Carriage bolt, 5700-D (5/16 x 1 inch)
4	Locknut, 5700-D (5/16 inch)
4	Bolt, Workman 200 (3/8 x 1-1/4 inches)

Installing the Tank and Bracket on the Multi-Pro® 1200 Series

1. Locate the battery on the right side of the machine. Loosen the knobs on the sides of the battery box and remove the battery cover (Figure 4).

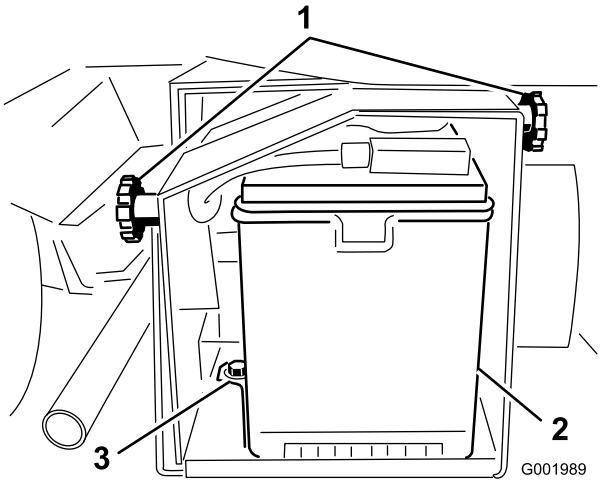

Figure 4

1. Knobs
2. Battery
3. Retainer

2. Install the bracket to the holes in the battery box using the 4 carriage bolts (3/8 x 1-1/4 inches) and 4 locknuts (3/8 inch) (Figure 5).

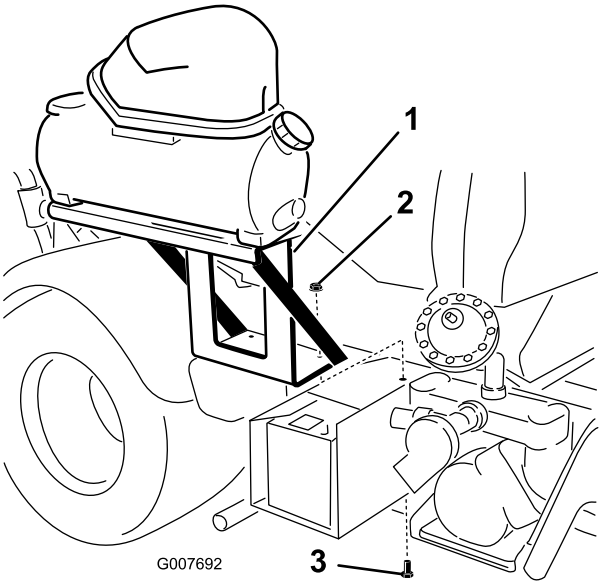

Figure 5

1. Bracket, 1200 series
2. Locknut (3/8 inch)
3. Carriage bolt (3/8 x 1-1/4 inches)

3. Replace the battery cover and secure it with the knobs removed previously (Figure 4).

Installing the Tank and Bracket on the Multi-Pro® 5700-D

1. Position the sprayer on a level surface, set the parking brake, stop the pump, stop the engine, and remove the ignition key.
2. At the right rear fender, loosen the 4 bolts at the front and rear of the fender.
3. Install the bracket to the holes in the right rear fender using 4 carriage bolts (5/16 x 1 inch) and 4 locknuts (5/16 inch) as shown in Figure 6.

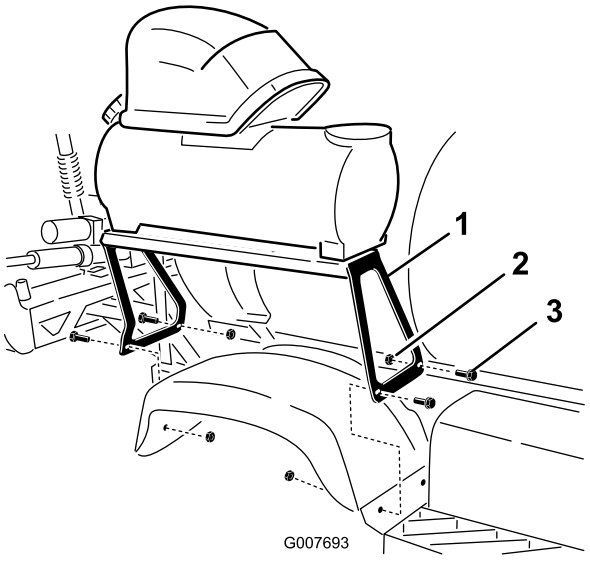

Figure 6

1. Bracket, 5700-D
2. Locknut (5/16 inch)
3. Carriage bolt (5/16 x 1 inch)

Installing the Tank and Bracket on the Workman® 200 Sprayer Systems

1. Locate the front, left handle of the tank skid to rear of the operator's seat.
2. Remove the left handle and fasteners from the left side of the tank skid.
3. Mount the bracket to the frame using 2 bolts (3/8 x 1-1/4 inches), 2 washers (3/8 inch), 2 flange nuts (3/8 inch) included in loose parts; and the left handle and fasteners removed previously (Figure 7).

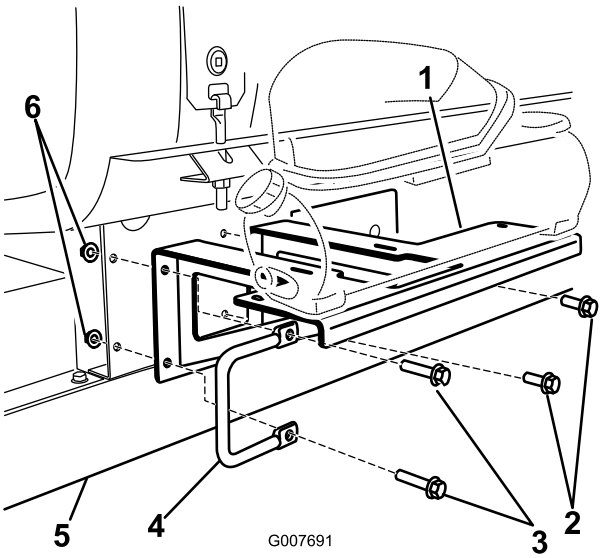

Figure 7

1. Bracket, Workman 200
2. Bolt (3/8 x 1 inch), existing
3. Bolt (3/8 x 1-1/4 inches), loose parts
4. Handle
5. Workman frame
6. Locknut (3/8 inch)

5

Routing the Foam Hoses

Parts needed for this procedure:

1	Foam hose
8	Plastic ties

Cutting Lengths for Foam Hose

	1200 Series	5700-D	Workman 200
Right boom foam hose	16 ft	14 ft	18 ft
Left boom foam hose	18 ft	16 ft	16 ft
Foam density control hose	N/A	16 ft	N/A
Compressor to tank loop	3 ft	3 ft (Clear tube used only)	3 ft

1. Measure the length of hose from the larger loop and cut accordingly. Place the remainder aside.
2. At each end of the cut hoses, cut back the black sheath to expose 3 to 4 inches of the blue and clear tubing.

Routing the Foam Hoses to the Booms

1. Install the foam hoses to the booms.

   Note: Install the shorter length of hose to the boom on the same side as the bracket; install the longer hose to the boom on the opposing side to the bracket.

   A. On the right boom, install the foam hose along the rear side of the upper support pole (Figure 8).

   Important: The foam hoses will be pinched when the booms are in the "X" transport position if they are installed on the wrong side.

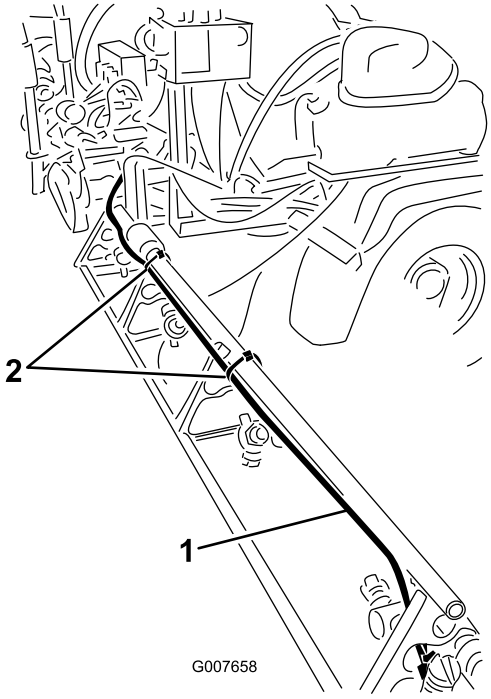

Figure 8
5700-D shown

1. Foam hose, right boom 2. Plastic ties

   B. Align the end of the hose with the end of the upper support pole. Use a plastic tie to secure the foam hose to the brace using the holes in the brace (Figure 9).

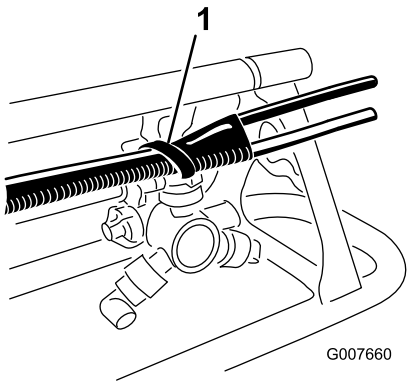

Figure 9

1. Plastic tie

   C. Continue to route the hose along the exiting boom supply hose. Use plastic ties to secure the hose to the brace at the positions shown in Figure 10.

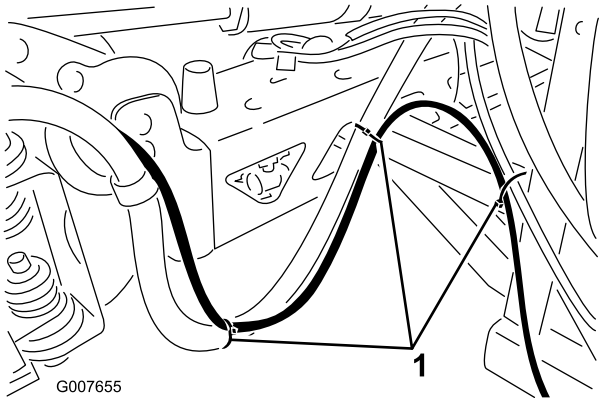

Figure 10

1. Plastic ties

   D. Repeat the process for the left boom, but route the hose along the front side of the upper support pole.

   Important: The foam hoses will be pinched when the booms are in the "X" transport position if they are installed on the wrong side.

2. Route the 2 foam hoses from the booms forward to the side of the machine with the mounting bracket.
3. Use the wire ties provided to secure the foam hoses to the existing wiring harness or boom supply hoses.

Routing the Foam Density Control Hose (for 5700-D Sprayers Only)

The foam control knob is installed on the cab of 5700-D sprayers only; a separate foam hose must be routed forward to the cab in preparation for installing the control valve.

1. Locate the 16-foot foam hose for the dashboard-mounted control valve.
2. Route the hose from the foam marker bracket forward, below the chemical tank and behind the fuel tank, along with existing wiring to the area under the seat box (Figure 11).

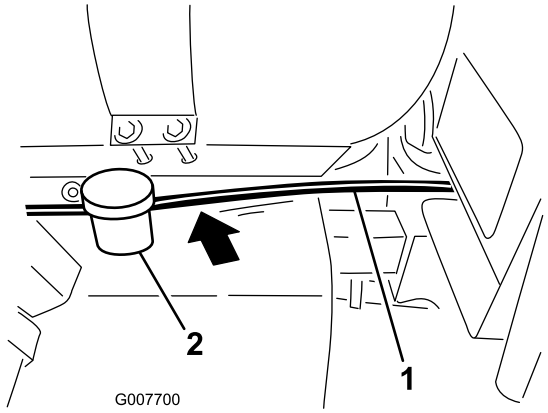

Figure 11

1. Foam hose
2. Fuel tank

3. Lift the seat, and continue to route the hose under the floor board and forward to the opening in the front end.
4. Route the hose upward to behind the right side of the dashboard (Figure 12).

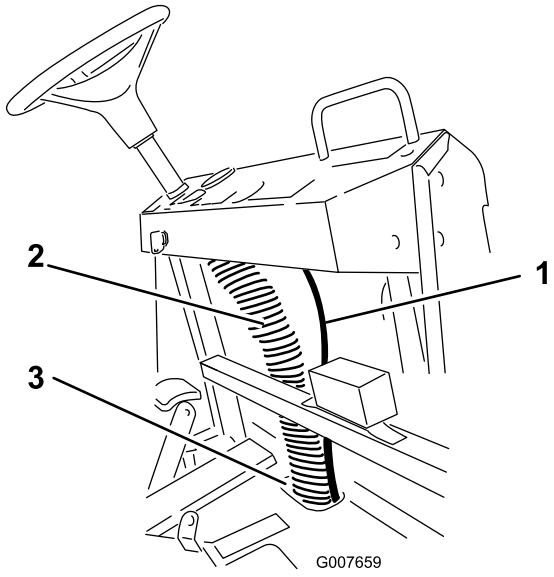

Figure 12

1. Foam hose
2. Column of existing wiring
3. Opening in front end floor board

5. Secure the hose to the column of existing wiring (Figure 12).

6

Installing the Wiring Harness

Parts needed for this procedure:

1	Wiring harness, foam marker
4	Plastic tie

Procedure

1. Verify that the wiring harness on the vehicle requires modification by looking for the plug shown in Figure 13 on the main wiring harness labeled "foam marker."

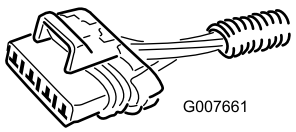

Figure 13

Note: If the plug is there, the machine does not require modification and you can proceed to the next section; if it is not there, go to the next step in this procedure.

2. Locate the foam marker wiring harness in loose parts.
3. Locate the main wiring harness on the vehicle. Follow it from the rear of the machine to locate the black power plug for the foam marker.
4. Plug the black square power plug from the foam marker harness to the labeled power plug on the main harness.

   Note: This will provide power to the foam marker tank.
5. Route the tandem solenoid plugs labeled left and right on the foam marker wiring harness rearward along the existing wiring.

   Note: Secure the harness to the main wiring every 3 to 4 feet with plastic ties.
6. At the rear of the machine, locate the foam marker plugs labeled left and right solenoid.
7. Mate the corresponding plugs on the foam marker wiring harness to the left and right solenoid plugs on the main wiring harness.

   Note: This links the foam marker to the existing wiring in the control panel to allow the switches to control the foam marker.

8. Ensure that the final plug is in position near the mounting bracket so that the foam marker assembly can be connected once it is installed.
9. Tie back any loose wiring along the harness to avoid snagging during operation.

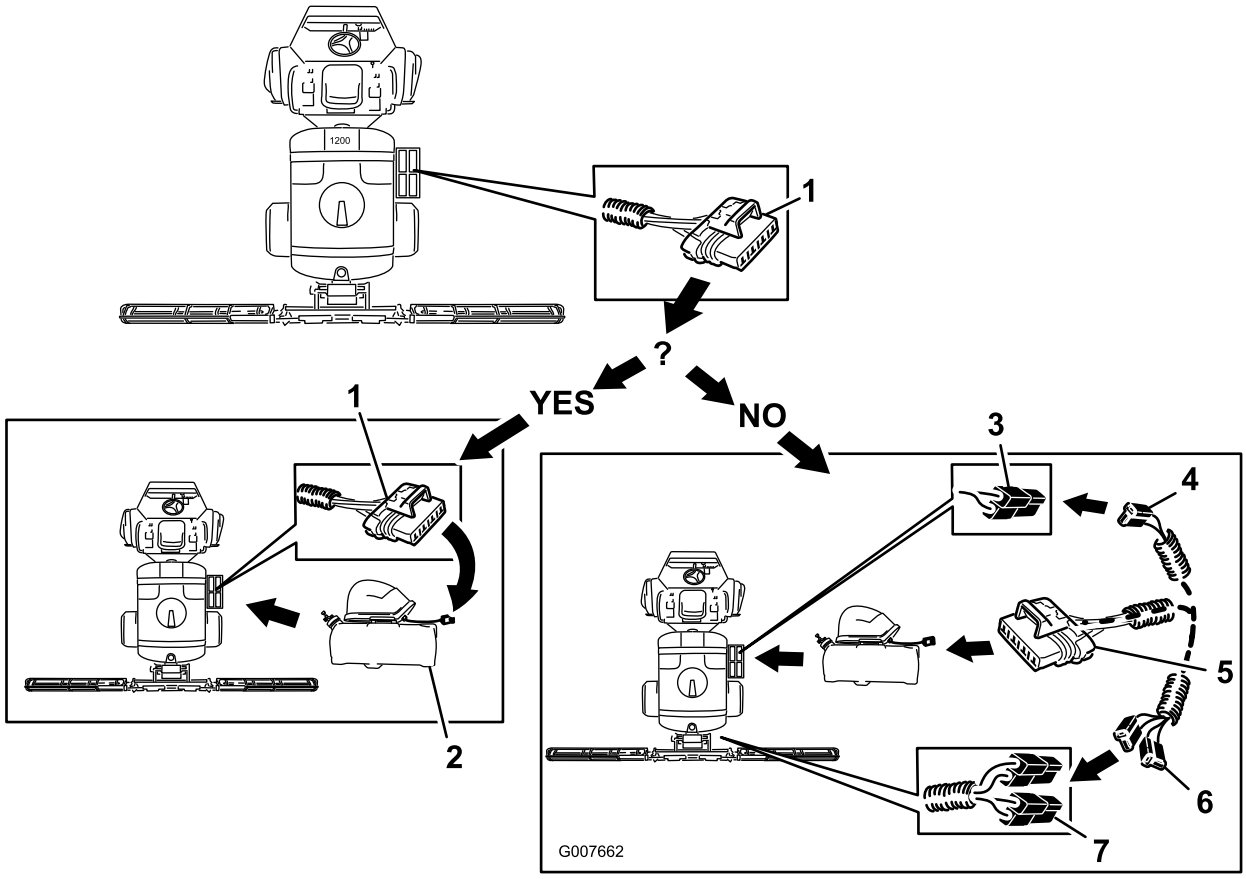

Figure 14
1200 series

1. Foam marker connector from vehicle main wiring harness (if existing)
2. Foam marker tank assembly
3. Black power plug (on older vehicles) main wiring harness, tagged foam marker
4. Power plug from foam marker wiring harness
5. Foam marker connection foam marker wiring harness
6. Solenoid plugs labeled left and right on the foam marker wiring harness
7. Left and right solenoid plugs on the main wiring harness

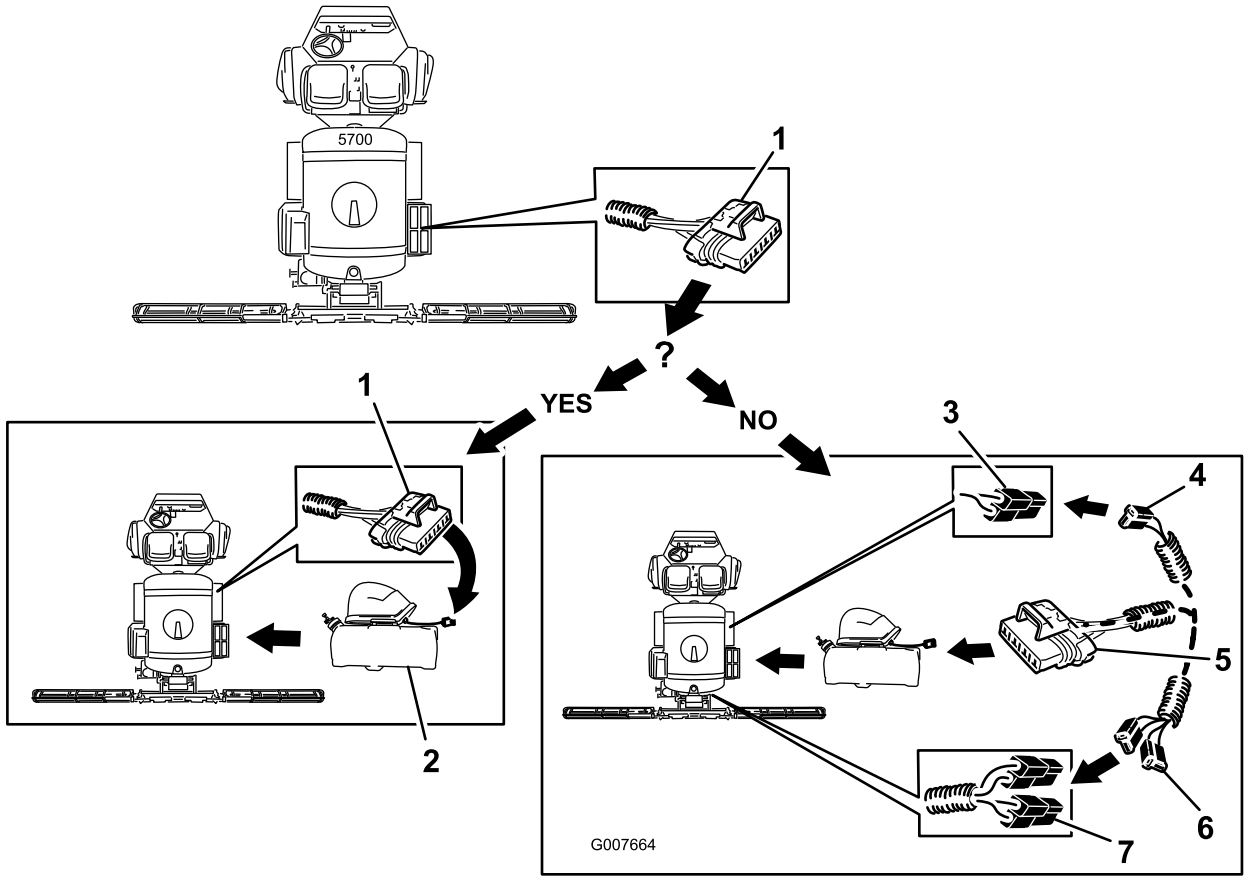

Figure 15

5700-D

1. Foam marker connector from vehicle main wiring harness (if existing)
2. Foam marker tank assembly
3. Black power plug (on older vehicles) main wiring harness, tagged foam marker
4. Power plug from foam marker wiring harness
5. Foam marker connection foam marker wiring harness
6. Solenoid plugs labeled left and right on the foam marker wiring harness
7. Left and right solenoid plugs on the main wiring harness

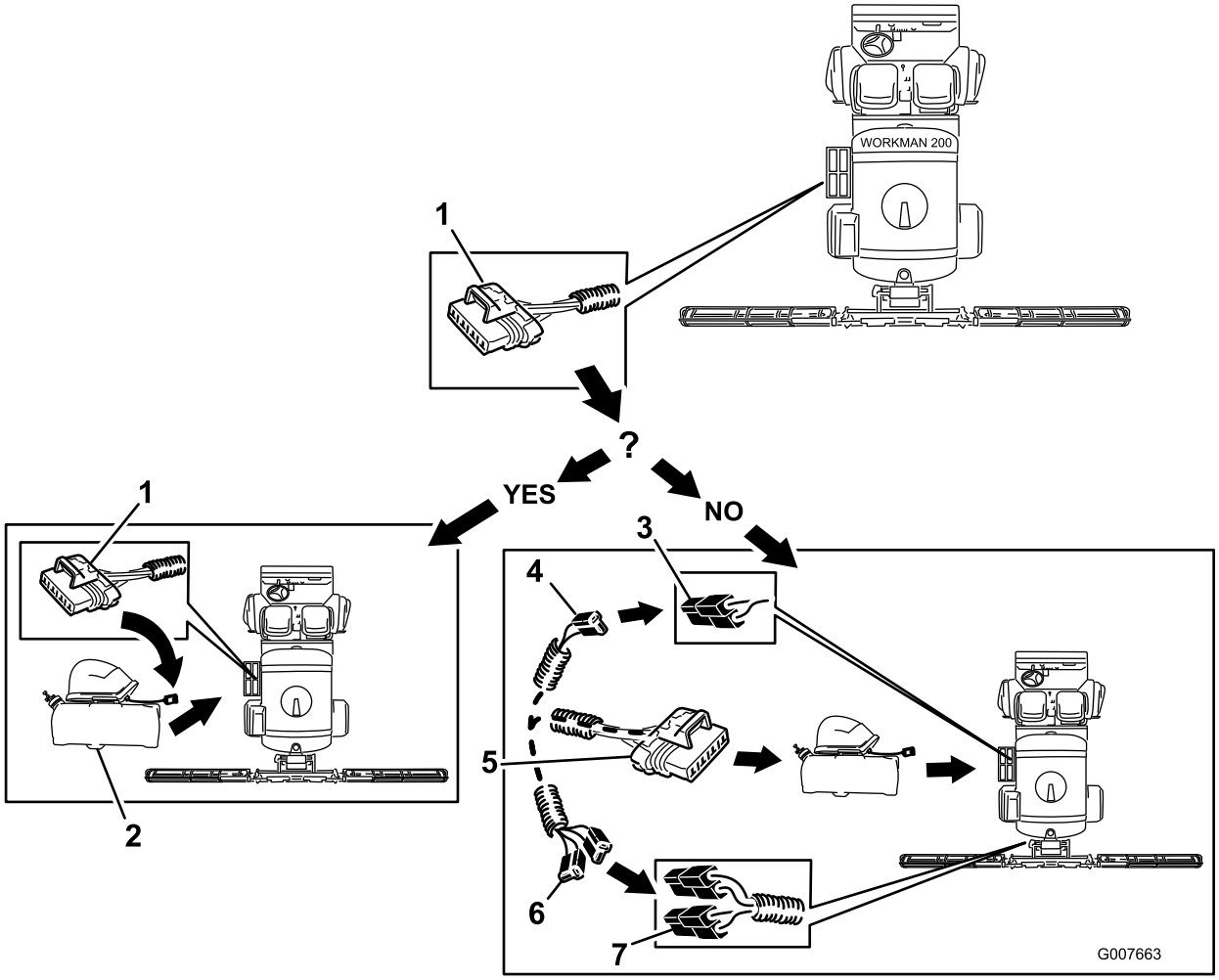

Figure 16

Workman 200 series

1. Foam marker connector from vehicle main wiring harness (if existing)
2. Foam marker tank assembly
3. Black power plug (on older vehicles) main wiring harness, tagged foam marker
4. Power plug from foam marker wiring harness
5. Foam marker connection foam marker wiring harness
6. Solenoid plugs labeled left and right on the foam marker wiring harness
7. Left and right solenoid plugs on the main wiring harness

7

Installing the Foam Nozzles

Parts needed for this procedure:

2	Hose clamps (blue)
2	Hose clamps (white)
4	Brackets
4	Spacers
4	Set screws
2	Mounting rod
2	Foam nozzle assemblies

Procedure

1. Install a plastic tube clamp to the exposed foam tubes. Use a blue clamp for the blue (fluid) tube and a white clamp for the clear (air) tube (Figure 17).

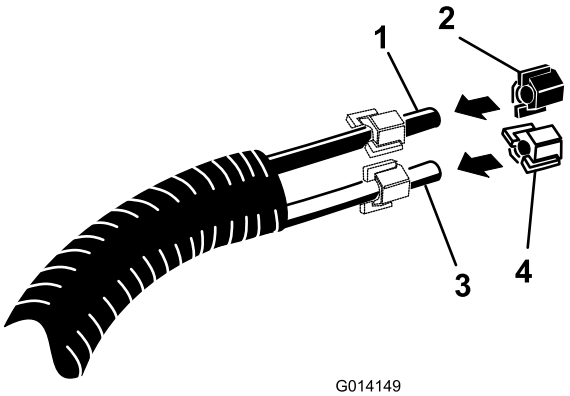

G014149

Figure 17

1. Blue tube
2. Blue tube clamp
3. Clear tube
4. White tube clamp

2. Locate the foam nozzle mounting brackets and spacer. Install the first bracket 3 to 4 inches from the end of the upper boom support pole. Assemble the bracket and spacer as shown (Figure 18).

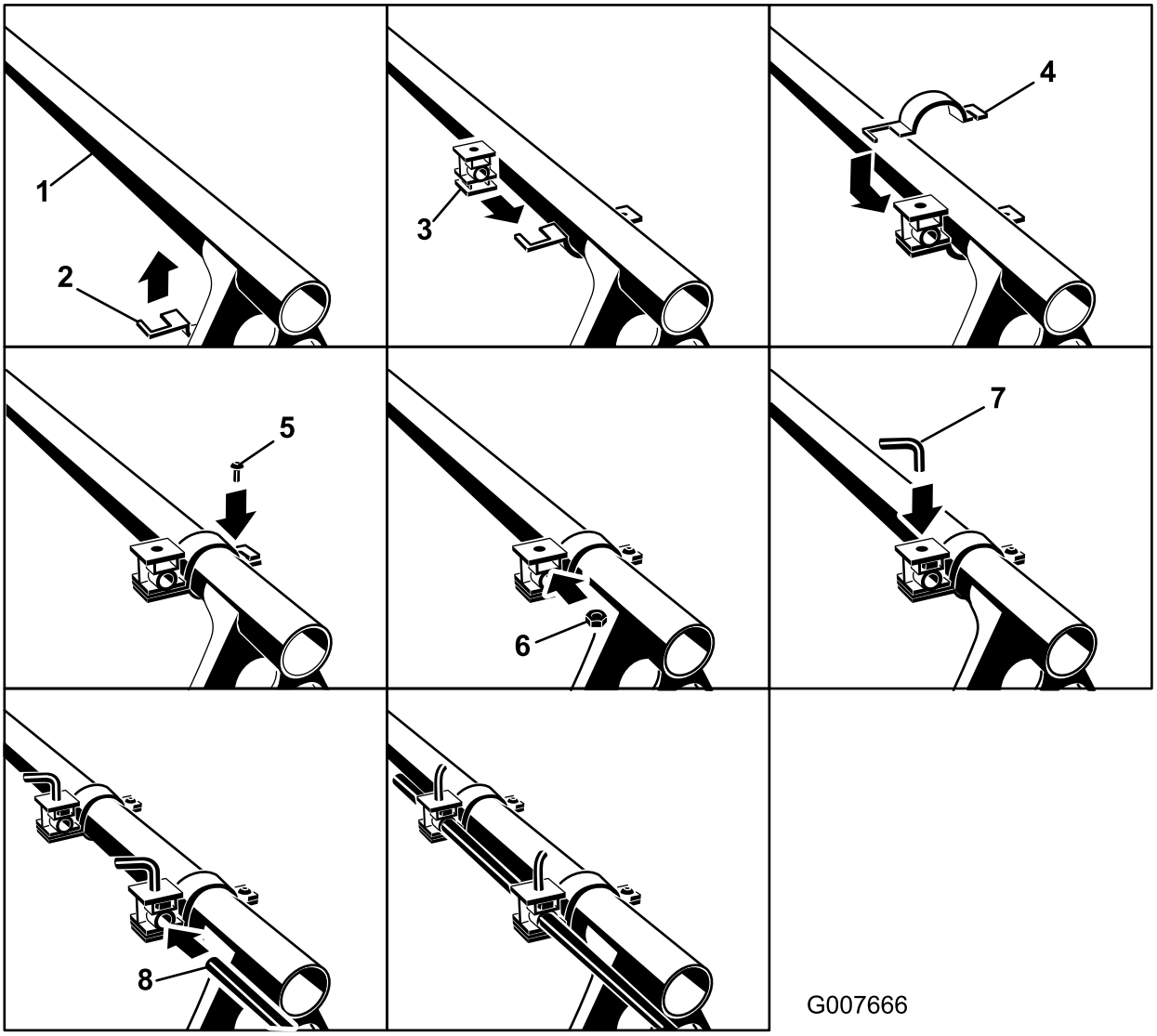

Figure 18

1. Upper boom support pole
2. Bracket clamp half, lower
3. Spacer, note orientation
4. Bracket clamp half, upper
5. Screw, clamp
6. Nut, spacer
7. Set screw
8. Mounting rod

3. Install the second bracket assembly 3 to 4 inches inboard from the first bracket.
4. Install a set screw in the top hole of each spacer.
5. Install the mounting rod, with the splined end outward, into the holes in the spacers. Use the set screws to secure the rod in the desired position.
6. Locate the foam nozzles in loose parts. Install a nozzle to the mounting rod as shown (Figure 19).

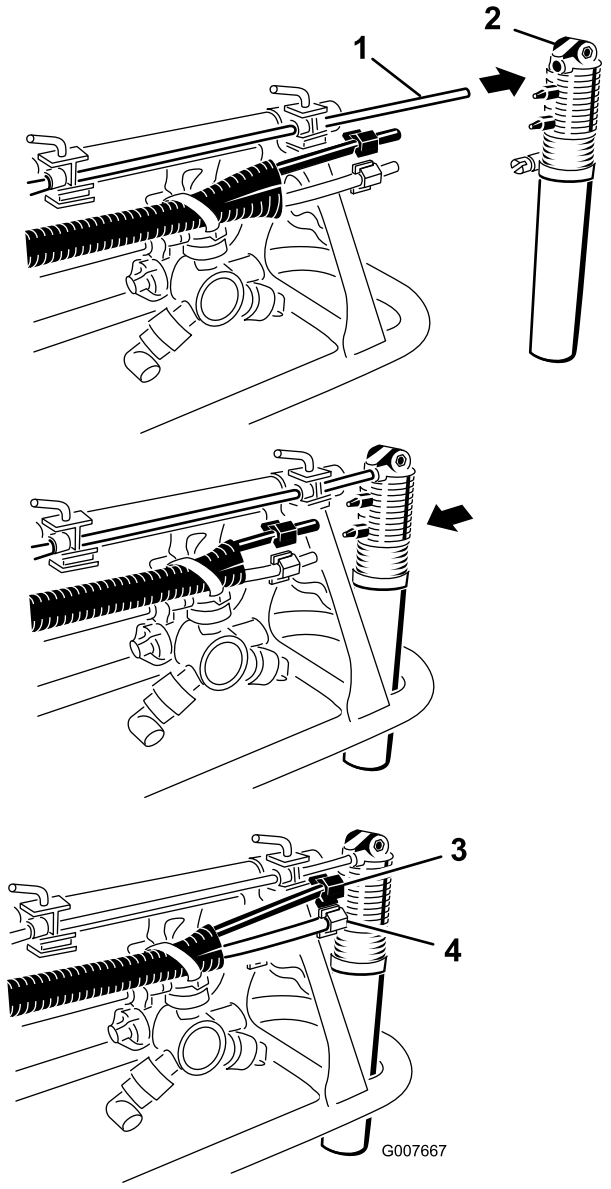

Figure 19

1. Mandrel, splined end
2. Foam nozzle
3. Blue tube and clamp
4. Clear tube and white clamp

7. Connect the blue tube to the upper barb and the clear tube to the lower barb.
8. Secure the hoses with the tube clamps installed previously.
9. Repeat this procedure for the opposing boom.

   Note: Install both mounts onto the rearward side of the upper support pole.

8

Installing the Foam Control Valve and Connecting the Hoses

Parts needed for this procedure:

1	Regulating valve, cap mount
1	Regulating valve, dashboard mount
1	Decal, 112-7890

Installing the Foam Control Valve on Multi-Pro 1200 Series Turf Sprayers and Workman 200 Spray Systems

1. Locate the black cap on the end of the foam marker tank assembly.
2. Install the 3-foot loop-back hose and cap mount regulating valve to the black cap (Figure 20).

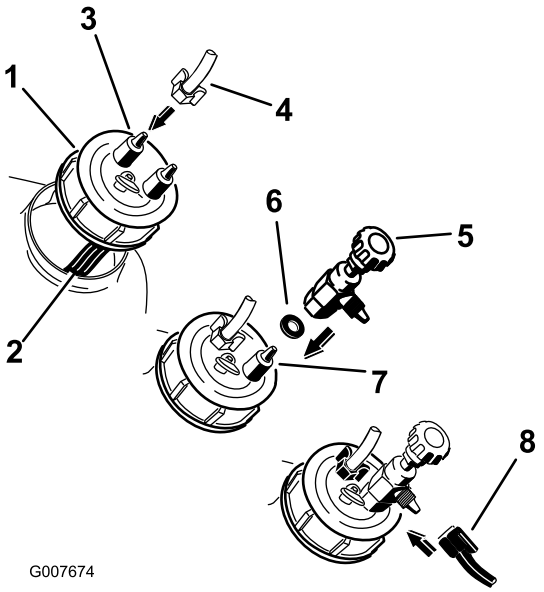

Figure 20

1. Black cap, end of tank assembly
2. Filter tube, blue (inside tank)
3. Barb, **not connected** to filter tube
4. Clear tube and white clamp
5. Cap mount regulating valve
6. Washer
7. Barb, **connected** to filter tube
8. Blue tube and clamp

A. Unscrew the black tank cap and lift it from the machine enough to see the blue filter tube.

B. Remove the white tube clamp from the hose barb on the tank cap **not connected** to the blue filter tube inside the tank.

C. Install the white clamp over the clear tube, install the clear tube onto the hose barb, and secure the clear tube with the white clamp.

D. Locate the cap mount regulating valve in loose parts.

Note: This valve is black with one washer.

E. Remove the blue tube clamp from the hose barb on the tank cap **connected** to the blue filter tube inside the tank.

F. Install the washer then the cap mount regulating valve to the hose barb.

G. Install the blue clamp over the blue tube, install the blue tube to the side barb on the valve, and secure the blue tube with the blue tube clamp.

Connecting the Hoses on Multi-Pro 1200 Series Turf Sprayers and Workman 200 Spray Systems

1. Connect the electrical plug from the foam marker tank assembly to the open plug in the wiring harness at the bracket.
2. Install the foam marker hoses from the booms as described below.
   A. Locate a blue clamp and a white clamp in loose parts.
   B. Install a corresponding colored clamp over each colored tube from the 3-foot loop-back hose previously installed to the black tank cap.
   C. Install the blue and clear tubes to the corresponding upper barbs on the compressor (Figure 21).

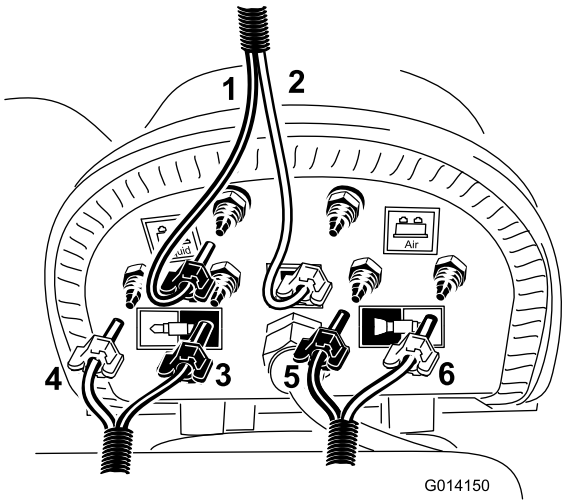

Figure 21

1. Blue (fluid) tube and blue clamp, 3 foot loop back hose
2. Clear (air) tube and white clamp, 3 foot loop back hose
3. Right boom, blue tube and blue clamp
4. Right boom, clear tube and white clamp
5. Left boom, blue tube and blue clamp
6. Left boom, clear tube and white clamp

   D. Locate 2 blue clamps and 2 white clamps in loose parts.
   E. Install a corresponding colored clamp over each colored tube from the foam hose previously routed to the spray booms.
   F. Locate the foam hose routed to the left boom, and install the blue and white tubes to the locations as shown in Figure 21.
   G. Locate the foam hose routed to the right boom, and install the blue and white tubes to the locations as shown in Figure 21.
   H. Secure all tubes to barbs with the remaining clamps.
3. The final routing should be as shown in Figure 22.

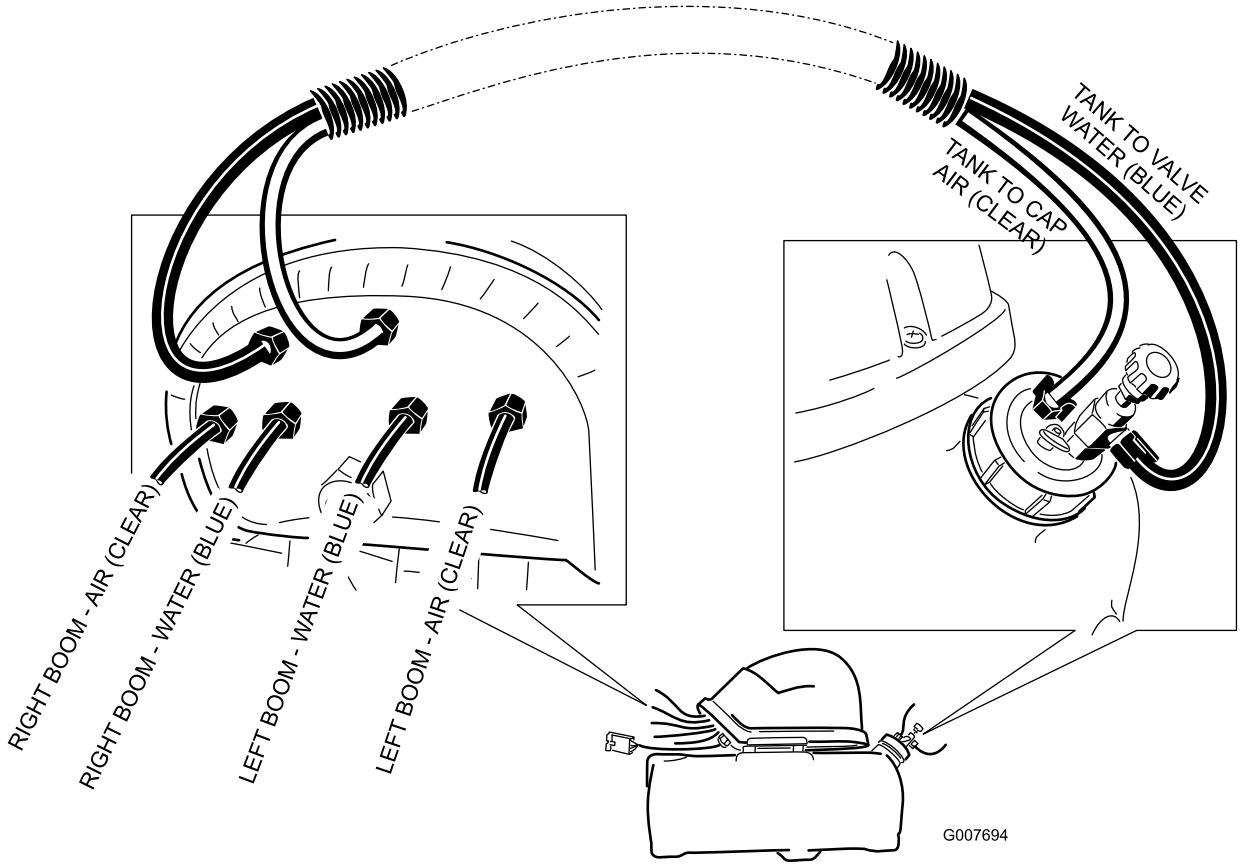

Figure 22

Installing the Foam Control Valve on Multi-Pro 5700-D Turf Sprayers

1. Locate the foam hose previously routed forward to the cab.
2. Install a plastic tube clamp to the exposed foam tubes.

   Note: Use a blue clamp for the blue (fluid) tube and a white clamp for the clear (air) tube.
3. Make a mark inward from the right side of the dashboard 10 inches and then 1-1/2 inches from the bottom of the dashboard (Figure 23).

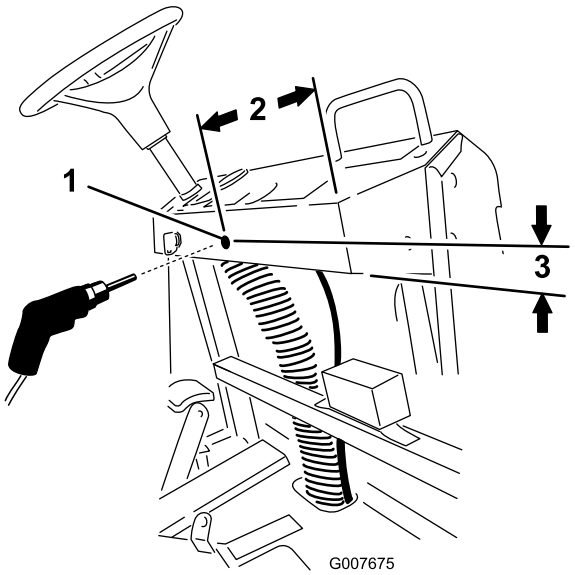

Figure 23

1. Drill hole, 7/16 inch diameter
2. 10 inches
3. 1-1/2 inches

4. Drill a 7/16 inch diameter hole at the location marked, and clean any debris and file off any rough edges around the hole.

5. Locate the dashboard mount regulating valve that can be disassembled in loose parts.
6. Loosen the nut that secures the knob assembly to the tee fitting as shown in Figure 24.

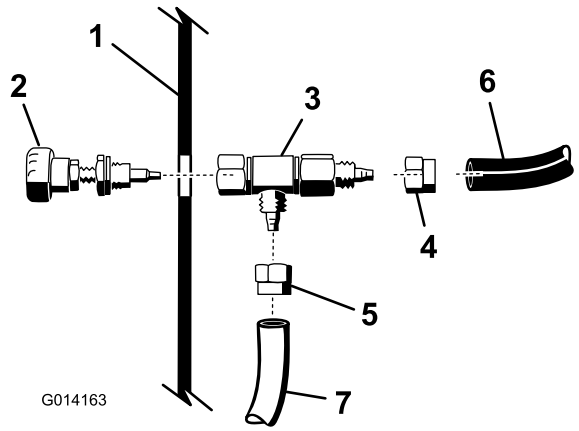

Figure 24

1. Dashboard
2. Knob, dashboard mount regulating valve
3. Body, dashboard mount regulating valve
4. Ferule, blue tube
5. Ferule, clear tube
6. Blue tube
7. Clear tube

7. Install the blue and white tubes from the foam hose under the dashboard to the tee fitting as shown in Figure 24.

   Note: Use the tube clamps to secure the tubes to the fitting.
8. Install the threaded end of the knob assembly to the dashboard in the hole drilled previously.
9. Install the tee fitting the knob assembly on the underside the secure the dashboard mount regulating valve in place.
10. Install the decal as shown in Figure 25.

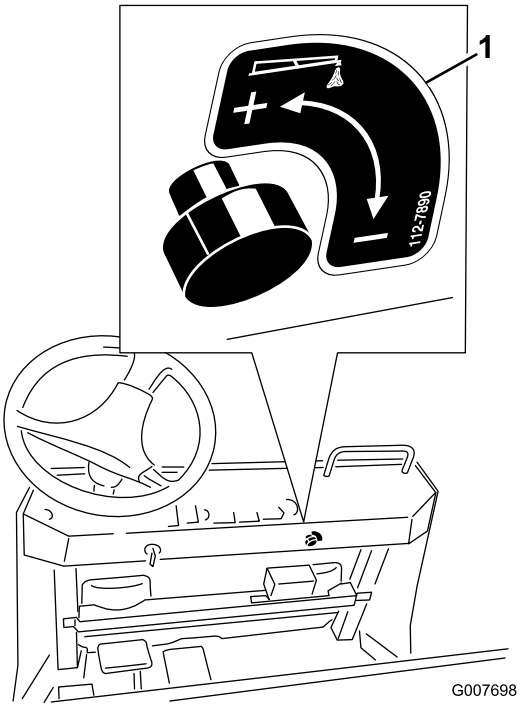

Figure 25

1. Decal 112-7890

Connecting the Hoses on Multi-Pro 5700-D Turf Sprayers

1. Connect the electrical plug from the foam marker tank assembly to the open plug in the wiring harness at the bracket.
2. Install the foam marker hoses from the booms as described below.
   A. Locate the open tube ends from the long hose routed to the dashboard previously installed, and install the blue tube to the an open barb on the black, tank cap.

      Note: Install the clear tube to the **blue** or water barb on the compressor shown in Figure 26. Use a blue tube clamp to secure both tubes. The sheath of the tubing will require further splitting to accommodate the length of the tank assembly.

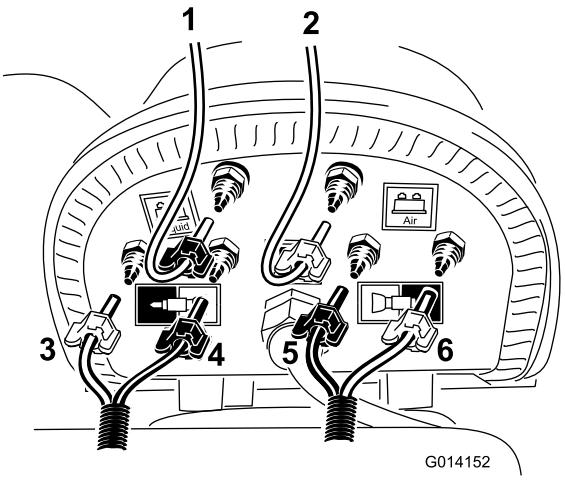

Figure 26

1. Clear tube and blue clamp (return tube from dashboard mount control valve)
2. Clear tube and white clamp (single use clear tube of 3-foot loop-back hose)
3. Right boom, clear tube and white clamp
4. Right boom, blue tube and blue clamp
5. Left boom, blue tube and blue clamp
6. Left boom, clear tube and white clamp

B. Locate the short, loop-back hose previously cut, and install the clear tube to the remaining barb on the black, tank cap shown in Figure 26.

Note: Route the open end to the air or white barb on the compressor. Use white tube clamps to secure the tube.

C. Locate 2 blue clamps and 2 white clamps in loose parts, and install a corresponding colored clamp over each colored tube in the foam hose previously routed to the spray booms.

D. Locate the foam hose routed to the left boom, and install the blue and white tube to the locations as shown in Figure 26.

E. Locate the foam hose routed to the right boom, and install the blue and white tube to the locations as shown in Figure 26.

F. Secure all tubes to with the remaining tube clamps.

3. The final routing should be as shown in Figure 27.

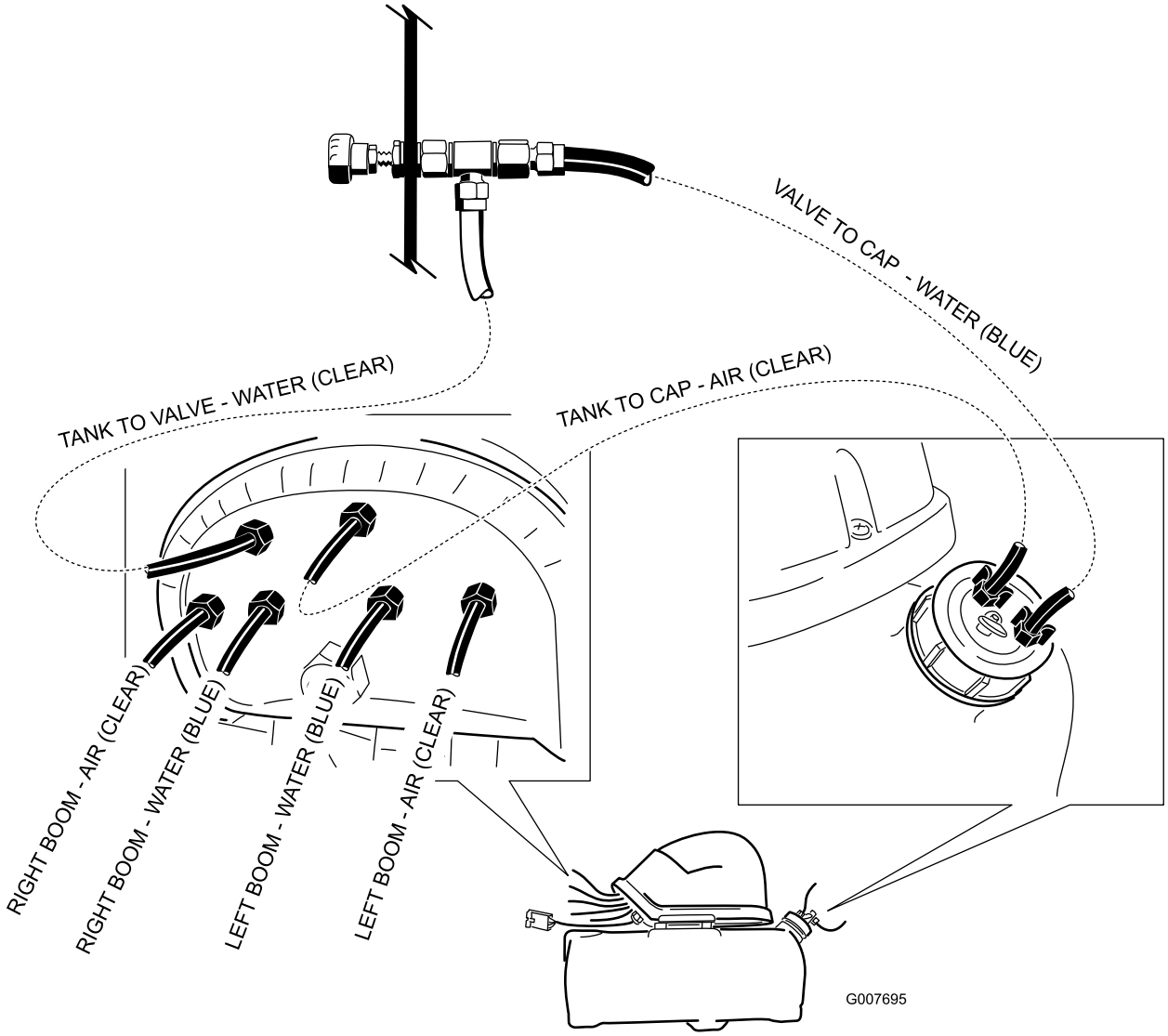
VALVE TO CAP - WATER (BLUE)
TANK TO VALVE - WATER (CLEAR)
TANK TO CAP - AIR (CLEAR)
RIGHT BOOM - AIR (CLEAR)
RIGHT BOOM - WATER (BLUE)
LEFT BOOM - WATER (BLUE)
LEFT BOOM - AIR (CLEAR)
G007695

Figure 27

9

Installing the Switches and Fuse

Parts needed for this procedure:

2	Rocker switch
1	Fuse, 15-amp

Multi Pro 1200 or 1250 Turf Sprayer

1. Remove the spray control panel to expose the bottom side.
2. Lift and remove the 2 plugs from the spray control panel on the vehicle, and install the 2 rocker switches provided in their place (Refer to Figure 28 for the Multi Pro 1200 and Figure 29 for the Multi Pro 1250).

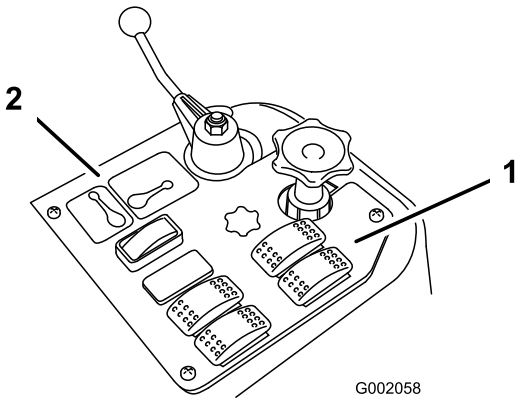

Figure 28

1200

1. Foam marker switches
2. Spray control panel

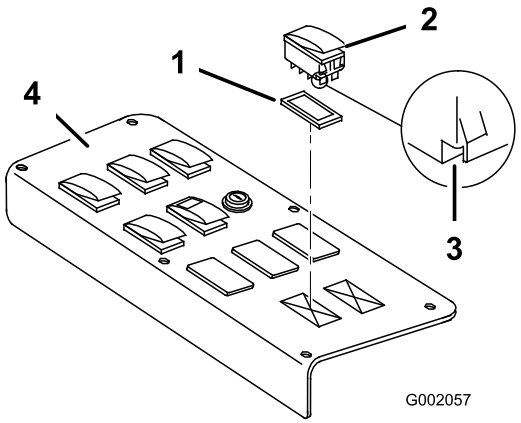

Figure 29

1250

1. Plug
2. Switch
3. Notch (at back)
4. Spray control panel

3. Plug the connector labeled for the right foam solenoid to the right switch and the connector labeled for the left foam solenoid to the left switch.

   Note: Ensure that the orientation of the switches matches what is shown in Figure 29, with the notch pointing toward the rear of the vehicle.
4. Insert the 15-amp fuse in the corresponding slot in the fuse block located at the front of the vehicle.

Multi Pro 5700-D Turf Sprayer

1. Remove the throttle knob by unscrewing it from the throttle rod at the center console.
2. Release the latch and remove the switch panel assembly from the center console assembly (Figure 30).

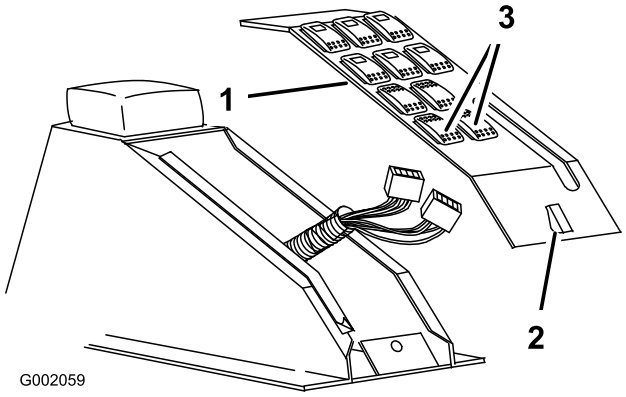

Figure 30

1. Control panel
2. Latch
3. Foam marker switches

3. Remove the foam marker switch hole plugs.
4. Install the 2 rocker switches into the switch panel.

Note: Ensure that the notch/hole on the bottom of each switch is oriented toward the rear of the vehicle.

5. Plug the connector labeled for the right foam solenoid to the right switch and the connector labeled for the left foam solenoid to the left switch.
6. Install the switch panel and secure the latch.
7. Screw the throttle knob onto the throttle rod until it is hand tight.
8. Insert the 15-amp fuse in the corresponding slot in the fuse block located at the front of the vehicle.

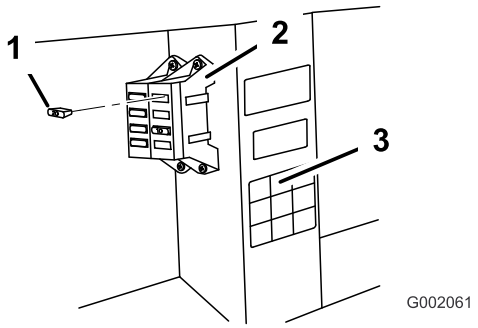

Figure 32

1. 15-amp
2. Fuse block
3. Fuse box decal

Workman 200 Spray System

1. Loosen the 4 screws that secure the front panel to the control box (Figure 31).

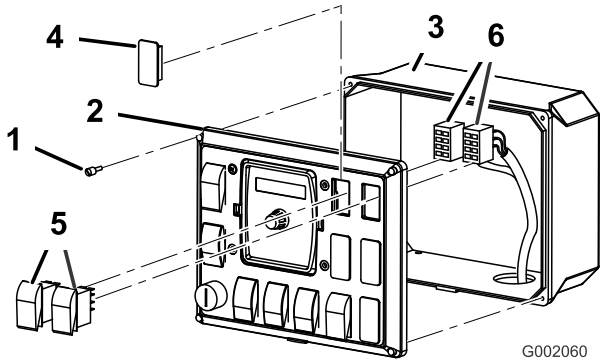

Figure 31

1. Screw
2. Front panel
3. Control box
4. Plug
5. Rocker switch
6. Connectors

2. Remove the front panel to expose the inside of the control box (Figure 31).
3. Lift and remove the 2 plugs from the spray control panel on the vehicle, and install the 2 rocker switches provided in their place (Figure 31).
4. Plug the connector labeled for the right foam solenoid to the right switch and the connector labeled for the left foam solenoid to the left switch.

   Note: Ensure that the orientation of the switches mates with the orientation of the connector.
5. Install the front control panel to the control box, and secure it with the 4 screws loosened previously.
6. Insert the 15-amp fuse in the top slot in the fuse block.

   Note: Ensure that the corresponding wire in the fuse block is connected to the red and black wire in the harness (Figure 32).

Operation

Using the Controls

Right boom switch—activates the compressor, generating a flow of water and air to the right boom section.

Left boom switch—activates the compressor, generating a flow of water and air to the left boom section.

Note: You can drop the foam simultaneously from both boom sections.

Indicator markings—located on the side of the tank, they indicate the solution level in the tank.

Foam regulator adjustment valve—controls the consistency of the foam solution. Adjusting the valve, opening or closing, controls the amount of soap solution delivered to the foam nozzles. Increasing the flow will result in larger, more frequent foam drops; decreasing the flow will result in smaller, less frequent foam drops.

Note: A watery marker consistency may be helpful on windy days.

Pressure relief valve—pull the red tab on the tank cap outward to relieve pressure in the tank.

Filling the Tank and Adjusting the Foam Density

Important: Flush the system with clean water after each use, especially after using hard water. Do not apply lubricating oils, grease, or other petroleum products to the compressor motor assembly.

1. Ensure that both the left and right boom switches located on the console are in the Off position.
2. Pull out on the red pressure relief tab and remove the black cap from the tank.
3. Pour the proper amount water into the tank, and then add foam concentrate through the opening in the top of the tank according to the manufacturer's instructions.

   Important: Extreme pH levels (hardness or softness) of the water will affect the amount of foam concentrate needed.
4. Install the cap on the tank and tighten it by hand.
5. For the initial operation, open the foam density adjustment valve 1/8 to 1/4 turn (Figure 33).

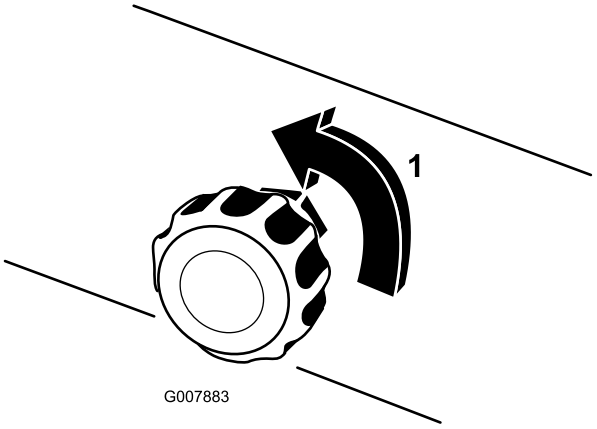

Figure 33

1. 1/4 turn open

6. Start operating the marking system and make a test pattern on the ground.

   Note: When you first start the marking system, allow 1 to 2 minutes for the foam to flow through the line.
7. Adjust the foam density adjustment valve to obtain the desired consistency and spray as normal.

   Note: If you leave the foam in the line for more than 2 hours, it may become watery. Before operating after a break of 2 or more hours, run the machine for 1 to 2 minutes to remove the excess water.

   If the foam in the machine is very watery, do the following:

   A. Close the foam density adjustment valve completely.

   B. Operate for 2 minutes.

   C. Wait 1 minute and then check the consistency of the foam.

   D. Adjust the foam to achieve the desired consistency.

Maintenance

Winterizing

1. Relieve the pressure within the tank by pulling the release valve on the tank.
2. Disconnect the air and liquid tubing from the tank cap.
3. Connect the air and water tubing together with the supplied tubing coupler.
4. Turn on the foam marker for 5 minutes on each side.

   Note: This will remove solution from the solenoids and avoid damage from freezing.
5. Disassemble the foam nozzles and replace the foam sponges.
6. Empty the tank of all soap and liquids to avoid damaging the tank from freezing.

Storage

1. Position the vehicle on a level surface, set the parking brake, stop the pump, stop the engine, and remove the ignition key.
2. Relieve pressure within tank by opening the tank fill cap, install the tank fill cap, and hand tighten it.
3. Disconnect the air and liquid tubing from the tank.

   Note: Replace air and liquid tubing together with the supplied tubing coupler.
4. Disassemble the foam nozzles and replace the foam sponges.
5. Empty the tank of all soap and liquids to avoid damaging the tank from freezing.

Notes:



Count on it.