Form No. 3366-978 Rev A

48cm Super Recycler® Lawn Mower

Model No. 20837—Serial No. 311000001 and Up

Operator's Manual

Introduction

This rotary-blade, walk-behind lawn mower is intended to be used by residential homeowners. It is designed primarily for cutting grass on well-maintained lawns on residential properties. It is not designed for cutting brush or for agricultural uses.

Read this information carefully to learn how to operate and maintain your product properly and to avoid injury and product damage. You are responsible for operating the product properly and safely.

You may contact Toro directly at www.Toro.com for product and accessory information, help finding a dealer, or to register your product.

Whenever you need service, genuine Toro parts, or additional information, contact an Authorized Service Dealer or Toro Customer Service and have the model and serial numbers of your product ready. Figure 1 identifies the location of the model and serial numbers on the product. Write the numbers in the space provided.

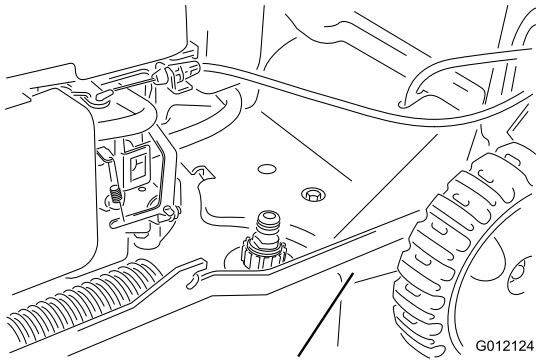

Figure 1

1. Model and serial number plate

Model No. _____

Serial No. _____

This manual identifies potential hazards and has safety messages identified by the safety alert symbol (Figure 2), which signals a hazard that may cause serious injury or death if you do not follow the recommended precautions.



Figure 2

1. Safety alert symbol

This manual uses two words to highlight information. **Important** calls attention to special mechanical information and **Note** emphasizes general information worthy of special attention.

This product complies with all relevant European directives. For details, see the separate product specific Declaration of Conformity (DOC) sheet.

For models with stated engine horsepower, the gross horsepower of the engine was laboratory rated by the engine manufacturer in accordance with SAE J1940. As configured to meet safety, emission, and operating requirements, the actual engine horsepower on this class of lawn mower will be significantly lower.

Do not tamper with the engine controls or alter the governor speed; doing so may create an unsafe condition resulting in personal injury.

Safety

Improperly using or maintaining this mower can result in injury. To reduce the potential for injury, comply with these safety instructions.

Toro designed and tested this mower for reasonably safe service; however, failure to comply with the following instructions may result in personal injury.

To ensure maximum safety, best performance, and to gain knowledge of the product, it is essential that you and any other operator of the mower read and understand the contents of this manual before the engine is ever started. Pay particular attention to the safety alert symbol (Figure 2) which means Caution, Warning, or Danger—"personal safety

© 2010—The Toro® Company
8111 Lyndale Avenue South
Bloomington, MN 55420

Register at www.Toro.com.

CE

Original Instructions (EN)
Printed in the USA
All Rights Reserved

instruction." Read and understand the instruction because it has to do with safety. Failure to comply with the instruction may result in personal injury.

General Lawn Mower Safety

The following instructions have been adapted from EN 836.

This cutting machine is capable of amputating hands and feet and throwing objects. Failure to observe the following safety instructions could result in serious injury or death.

Training

- Read the instructions carefully. Be familiar with the controls and the proper use of the equipment.
- Never allow children or people unfamiliar with these instructions to use the mower. Local regulations can restrict the age of the operator.
- Keep in mind that the operator or user is responsible for accidents or hazards occurring to other people or their property.
- Understand explanations for all pictograms used on the mower or in the instructions.

Gasoline

WARNING-Gasoline is highly flammable. Take the following precautions.

- Store fuel in containers specifically designed for this purpose.
- Refuel outdoors only and do not smoke while refueling.
- Add fuel before starting the engine. Never remove the cap of the fuel tank or add gasoline while the engine is running or when the engine is hot.
- If gasoline is spilled, do not attempt to start the engine but move the mower away from the area of spillage and avoid creating any source of ignition until gasoline vapors have dissipated.
- Replace all fuel tank and container caps securely.

Preparation

- While mowing, always wear substantial footwear and long trousers. Do not operate the equipment when barefoot or wearing open sandals.
- Thoroughly inspect the area where the equipment is to be used and remove all stones, sticks, wires, bones and other foreign objects.
- Before using, always visually inspect to see that guards, and safety devices, such as deflectors and/or grass catchers, are in place and working correctly.
- Before using, always visually inspect to see that the blades, blade bolts and cutter assembly are not worn or damaged. Replace worn or damaged blades and bolts in sets to preserve balance.

Starting

- Do not tilt mower when starting the engine unless the mower has to be tilted for starting. In this case, do not tilt it more than absolutely necessary and lift only the part, which is away from the operator.
- Start the engine carefully according to instructions and with feet well away from the blade(s) and not in front of the discharge chute.

Operation

- Never mow while people, especially children, or pets are nearby.
- Mow only in daylight or in good artificial light.
- Stay alert for holes in the terrain and other hidden hazards.
- Do not put hands or feet near or under rotating parts. Keep clear of the discharge opening at all times.
- Never pick up or carry a lawn mower while the engine is running.
- Use extreme caution when reversing or pulling a pedestrian controlled lawn mower towards you.
- Walk, never run.
- Slopes:
  - Do not mow excessively steep slopes.
  - Exercise extreme caution when on slopes.
  - Mow across the face of slopes, never up and down and exercise extreme caution when changing direction on slopes.
  - Always be sure of your footing on slopes.
- Reduce speed on slopes and in sharp turns to prevent overturning or loss of control.
- Stop the blade if the lawn mower has to be tilted for transportation when crossing surfaces other than grass and when transporting the lawn mower to and from the area to be mowed.
- Do not operate the engine in a confined space where dangerous carbon monoxide fumes can collect.
- Stop the engine

  - whenever you leave the lawn mower.
  - before refueling.
  - before removing the grass catcher.
  - before making height adjustment unless adjustment can be made from the operator's position.
- Stop the engine and disconnect the spark-plug wire.
  - before clearing blockages or unclogging chute.
  - before checking, cleaning or working on the lawn mower.
  - after striking a foreign object, inspect the lawn mower for damage and make repairs before restarting and operating the lawn mower.
  - if lawn mower starts to vibrate abnormally (check immediately).
- Lightning can cause severe injury or death. If you see lightning or hear thunder in the area, do not operate the machine; seek shelter.
- Watch out for traffic when crossing or near roadways.

Maintenance and Storage

- Keep all nuts, bolts and screws tight to be sure the equipment is in safe working condition.
- Do not use pressure cleaning equipment on machine.
- Never store the equipment with gasoline in the tank and inside a building where fumes can reach an open flame or spark.
- Allow the engine to cool before storing in any enclosure.
- To reduce the fire hazard, keep the engine, silencer, battery compartment and gasoline storage are free of grass, leaves, or excessive grease.
- Check grass catcher components and the discharge guard frequently and replace with manufacturer's recommended parts, when necessary.
- Replace worn or damaged parts for safety.
- Replace faulty silencers.
- If the fuel tank has to be drained, do this outdoors.
- Do not change the engine governor settings or overspeed the engine. Operating an engine at excessive speed can increase the hazard of personal injury.
- Be careful during adjustment of the lawn mower to prevent entrapment of the fingers between moving blades and fixed parts of the lawn mower.
- **To ensure the best performance and safety, purchase only genuine Toro replacement parts and accessories. Do not use *will fit* parts and accessories; they may cause a safety hazard.**

Sound Pressure

This unit has a sound pressure level at the operator's ear of 85 dBA, which includes an Uncertainty Value (K) of 1 dBA. The sound pressure level was determined according to the procedures outlined in EN 836.

Sound Power

This unit has a guaranteed sound power level of 96 dBA, which includes an Uncertainty Value (K) of 1 dBA. The sound power level was determined according to the procedures outlined in ISO 11094.

Vibration, Hand/arm

Measured vibration level for the left hand = 4.8 m/s^2

Measured vibration level for the right hand = 6.3 m/s^2

Uncertainty Value (K) = 2.5 m/s^2

The measured values were determined according to the procedures outlined in EN 836.

Safety and Instructional Decals

Important: Safety and instruction decals are located near areas of potential danger. Replace damaged decals.

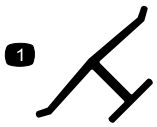

Manufacturer's Mark

1. Indicates the blade is identified as a part from the original machine manufacturer.

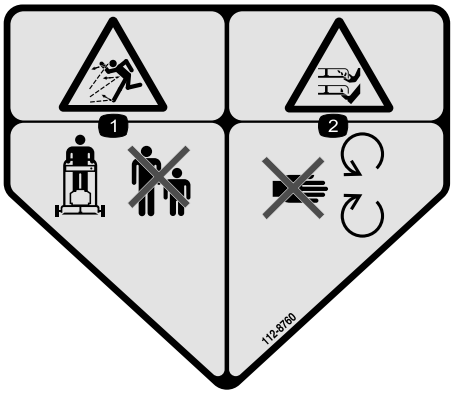

112-8760

1. Thrown object hazard—keep bystanders a safe distance from the machine.
2. Cutting/dismemberment of hand or foot—stay away from moving parts.



112-8867

1. Lock
2. Unlock



114-7982

1. Warning—read the *Operator's Manual*.
2. Thrown object hazard—keep bystanders a safe distance from the machine.
3. Cutting/dismemberment hazard of hand or foot, mower blade—disconnect the spark plug wire and read the instructions before servicing or performing maintenance.
4. Cutting/dismemberment hazard of hand or foot, mower blade—stay away from moving parts.
5. Cutting/dismemberment hazard of hand or foot, mower blade—do not operate up and down slopes; operate side to side on slopes; stop the engine before leaving the operating position; and look behind you when backing up.



119-2283

1. Height-of-cut

Setup

1

Unfolding the Handle

No Parts Required

Procedure

⚠ WARNING

Folding or unfolding the handle improperly can damage the cables, causing an unsafe operating condition.

- **Do not damage the cables when folding or unfolding the handle.**
- **If a cable is damaged, contact an Authorized Service Dealer.**

1. Loosen the upper handle knobs (Figure 3).

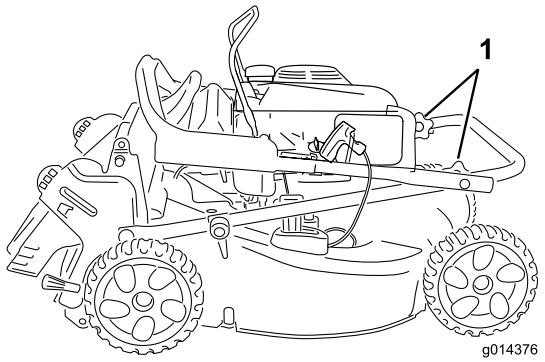

Figure 3

1. Handle knobs

2. Carefully move the upper handle forward until the handle halves are in line and nest together as shown in Figure 4.

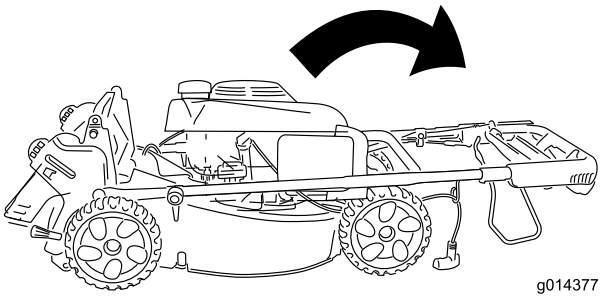

Figure 4

3. Tighten the handle knobs firmly by hand (Figure 3).
4. Rotate the handle rearward to the operating position and lock the handle at your desired height. Refer to Adjusting the Handle Height in the Operation section.

2

Installing the Blade Control Bar

No Parts Required

Procedure

Install the blade control bar into the upper handle (Figure 5).

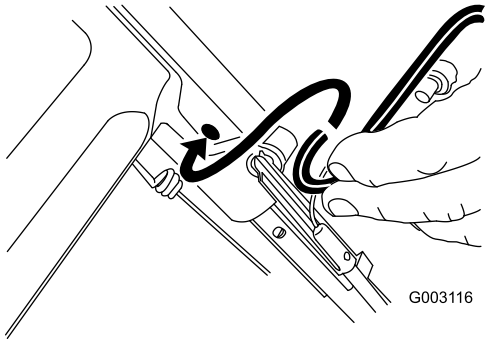

Figure 5

3

Filling the Engine with Oil

Parts needed for this procedure:

0.58 quart (0.55 l)	SAE 30 detergent oil with an API service classification of SH, SJ, SL, or higher (not supplied with the mower).

Procedure

Important: Your mower *does not* come with oil in the engine.

1. Move the mower to a level surface.
2. Remove the dipstick and wipe it off with a clean rag. (Figure 6).

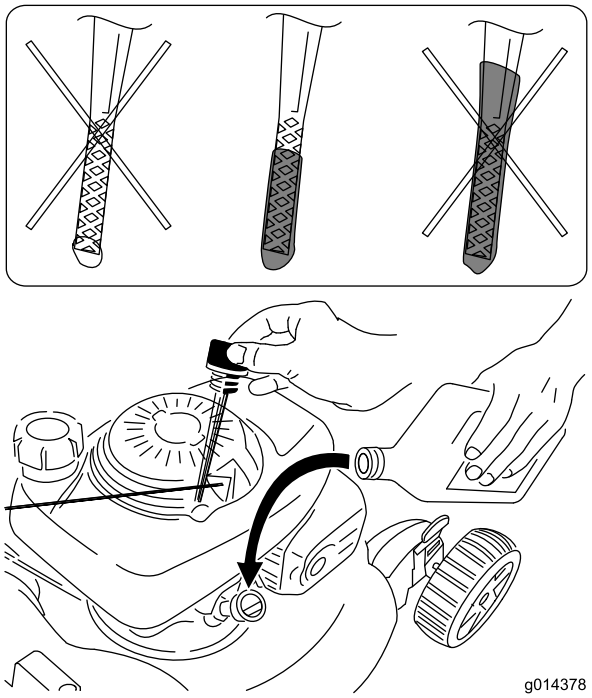

Figure 6

Note: When the crankcase is empty, pour about 3/4 of the crankcase capacity of oil in the crankcase, then follow the procedure in this section.

3. Check the oil level. Insert the dipstick into the oil fill tube until it stops, remove it and compare the oil level to the graphic in Figure 6.
   - If the dipstick looks like the left option, continue with this procedure.
   - If it matches the center option, you are finished.
   - If it looks like the right option, there is too much oil in the crankcase and you must drain some out; Refer to Changing the Engine Oil (page 12).

   Note: When checking the oil level, insert the dipstick into the filler neck just until it stops. **Do not** rotate the cap clockwise to secure it.
4. **Slowly** pour small amounts of oil into the oil fill tube, periodically checking the level with the dipstick, until the dipstick indicates that the engine is full as illustrated in Figure 6. **Do not overfill.** (Max. fill: 0.58 quart (0.55 l), **type: SAE 30 detergent oil** with an API service classification of SH, SJ, SL, or higher.)

   Note: If you overfill the engine, pour some oil out of it as directed in Changing the Engine Oil.
5. Install the dipstick securely. Rotate the cap clockwise until it stops and tighten it with your fingers.

Important: *Change the engine oil after the first 5 operating hours*; change it yearly thereafter. Refer to Changing the Engine Oil.

Product Overview

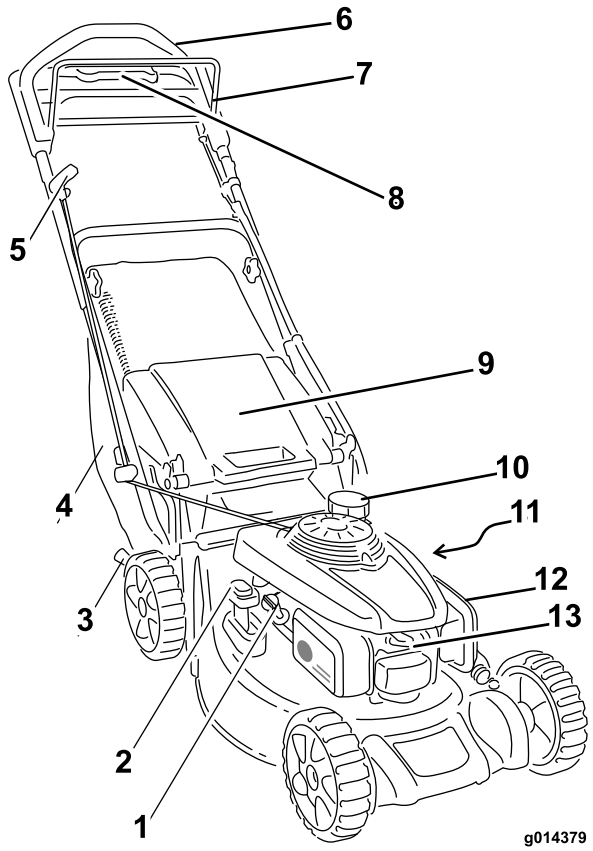

Figure 7

1. Oil fill/Dipstick
2. Recycling/bagging lever
3. Cutting height lever
4. Grass bag
5. Recoil start handle
6. Self-propel drive bar
7. Blade control bar
8. Traction-assist handle
9. Rear door
10. Fuel tank cap
11. Washout port (not shown)
12. Air filter
13. Spark plug

Specifications

Model	Weight	Length	Width	Height
20837	84 lb (38 kg)	60 in (152 cm)	21 in (53 cm)	43 in (109 cm)

Operation

Filling the Fuel Tank

⚠ DANGER

Gasoline is extremely flammable and explosive. A fire or explosion from gasoline can burn you and others.

- **To prevent a static charge from igniting the gasoline, place the container and/or mower directly on the ground before filling, not in a vehicle or on an object.**
- **Fill the tank outdoors when the engine is cold. Wipe up spills.**
- **Do not handle gasoline when smoking or around an open flame or sparks.**
- **Store gasoline in an approved fuel container, out of the reach of children.**

Fill the fuel tank with fresh unleaded regular gasoline from a major name-brand service station (Figure 8).

Important: To reduce starting problems, add fuel stabilizer to the fuel all season, mixing it with gasoline less than 30 days old.

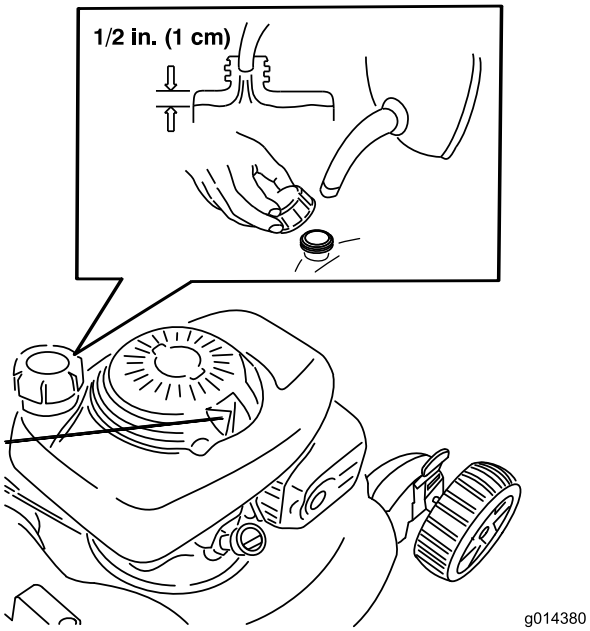

Figure 8

Checking the Engine Oil Level

Service Interval: Before each use or daily

1. Remove the dipstick, wipe it clean, and insert it into the oil filler neck, **but do not screw it in** (Figure 9).

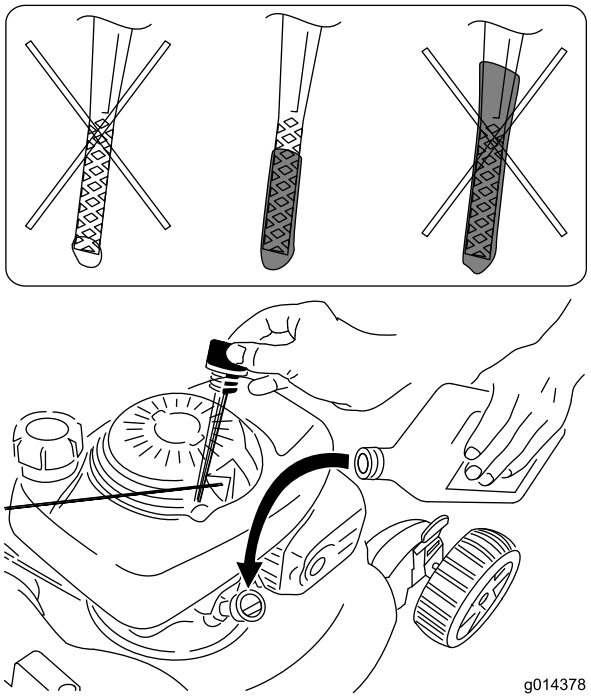

Figure 9

2. Remove the dipstick and check the oil level (Figure 9).

   If there is no oil on the dipstick, **slowly** pour oil into the oil fill tube, periodically checking the level with the dipstick, until the dipstick indicates that the engine is full as illustrated in Figure 9. **Do not overfill.** (Max. fill: 0.58 quart (0.55 l), type: SAE 30 detergent oil with an API service classification of SH, SJ, SL, or higher.)

   Note: If you overfill the engine, pour some oil out of it as directed in Changing the Engine Oil.

3. Install the dipstick securely.

Adjusting the Cutting Height

⚠ WARNING

Adjusting the cutting height may bring you into contact with the moving blade, causing serious injury.

- **Stop the engine and wait for all moving parts to stop.**
- **Do not put your fingers under the housing when adjusting the cutting height.**

⚠ CAUTION

If the engine has been running, the muffler will be hot and can severely burn you. Keep away from the hot muffler.

Adjust the cutting height as desired.

Note: To raise the mower, move the cutting height lever forward; to lower the mower, move the cutting height lever rearward (Figure 10).

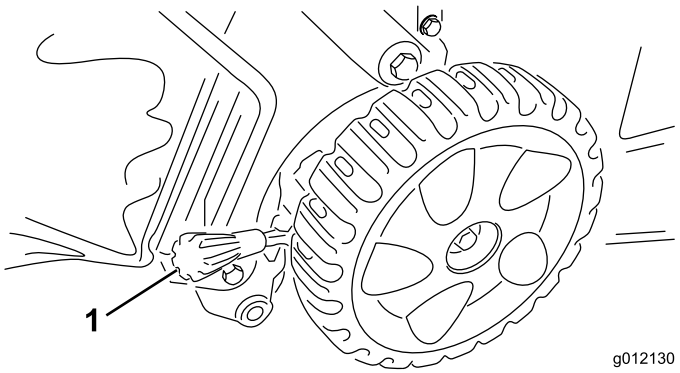

Figure 10

1. Cutting height lever

Note: The approximate cutting height settings are A=1 inch (25 mm); B=1-1/2 inch (38 mm); C=2 inches (51 mm); D=2-1/2 inches (64 mm); E=3-1/4 inches (83 mm); F=3-3/4 inches (95 mm); and G=4-1/4 inches (108 mm).

Adjusting the Handle Height

You may raise or lower the handle to a position comfortable for you.

Rotate the handle lock, move the handle to one of three positions, and lock the handle into position (Figure 11).

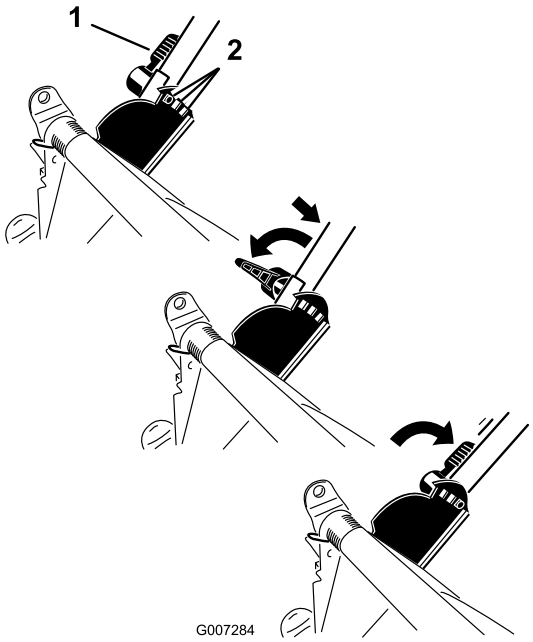

Figure 11

1. Handle lock
2. Handle positions

Starting the Engine

1. Turn the fuel valve lever to the On position (Figure 12).

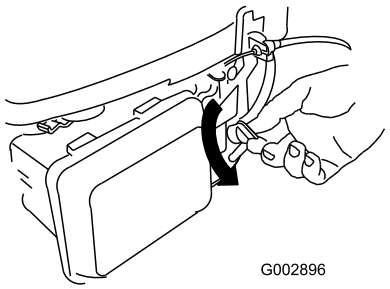

Figure 12

2. Hold the blade control bar against the handle and pull the recoil starter (Figure 13).

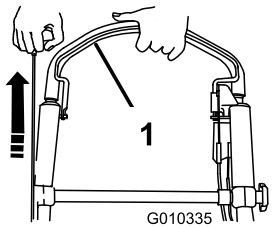

Figure 13

1. Blade control bar

Note: If the mower does not start, contact an Authorized Service Dealer.

Using the Self-propel Drive

To operate the self-propel drive, simply walk with your hands on the upper handle and your elbows at your sides, and the mower will automatically keep pace with you (Figure 14).

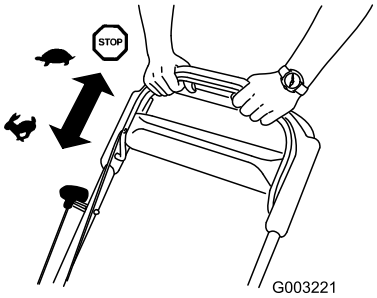

Figure 14

Stopping the Engine

Service Interval: Before each use or daily

To stop the engine, release the blade control bar (Figure 15).

Important: When you release the blade control bar, both the engine and blade should stop within 3 seconds. If they do not stop properly, stop using your mower immediately and contact an Authorized Service Dealer.

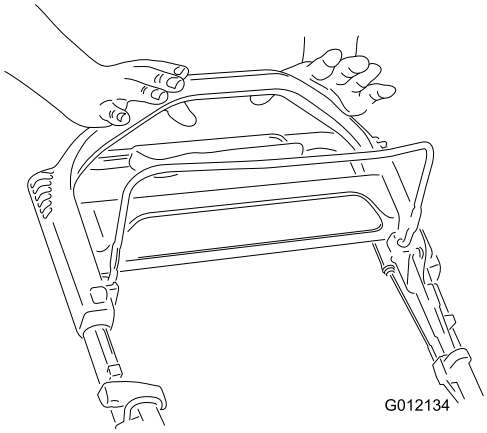

Figure 15

Recycling the Clippings

Your mower comes from the factory ready to recycle the grass and leaf clippings back into the lawn.

Note: The grass bag may remain on the mower while you are recycling the clippings.

1. Stop the engine and wait for all moving parts to stop.
2. Press the button on top of the Recycling/bagging lever and move the lever to the **recycling** mode (Figure 16).

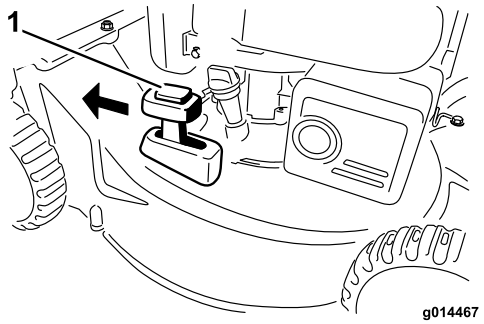

Figure 16

1. Recycling mode

Bagging the Clippings

Use the grass bag to collect grass and leaf clippings from the lawn.

⚠ WARNING

A worn grass bag could allow small stones and other similar debris to be thrown in the operator's or bystander's direction and result in serious personal injury or death to the operator or bystanders.

Check the grass bag frequently. If it is damaged, install a new Toro replacement bag.

⚠ WARNING

The blade is sharp; contacting the blade can result in serious personal injury.

Stop the engine and wait for all moving parts to stop before leaving the operating position.

1. Stop the engine and wait for all moving parts to stop.
2. To bag the grass clippings, install the grass bag (refer to Installing the Grass Bag). Press the button on top of the Recycling/bagging lever and move the lever to the **bagging** mode (Figure 16).

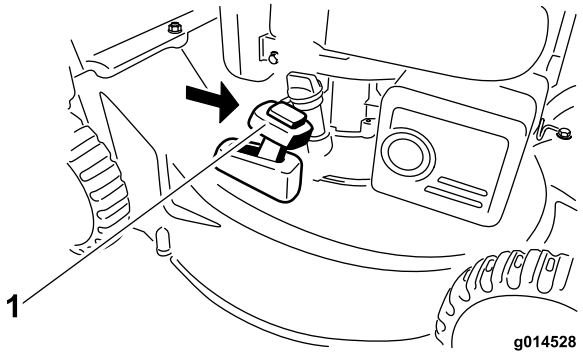

Figure 17

1. Bagging mode

Installing the Grass Bag

1. Stop the engine and wait for all moving parts to stop.
2. Raise and hold up the rear door, install the bag in the notches, and lower the rear door (Figure 18).

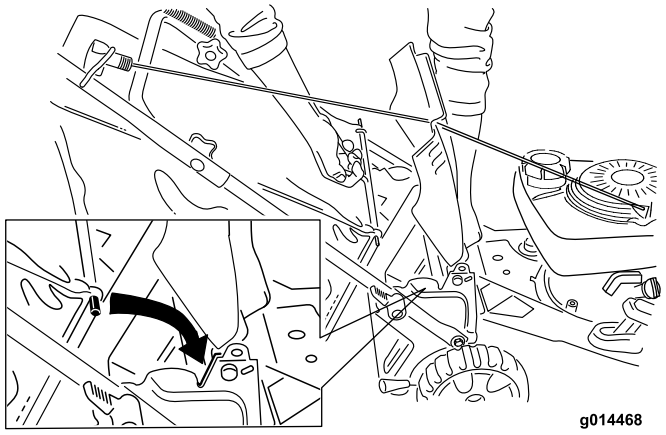

Figure 18

Removing the Grass Bag

1. Stop the engine and wait for all moving parts to stop.
2. Lift up the grass bag up and away from the handle.

   Note: Tilt the grass bag slightly backward to prevent the collected grass clippings from falling out.

Rear-discharging the Clippings

Use the rear discharge for cutting very tall grass.

If the bag is on the mower, remove it before rear-discharging the clippings (refer to Removing the Grass Bag).

Note: The Recycling/bagging lever should be in the **bagging** mode (Figure 16).

⚠ WARNING

The blade is sharp; contacting the blade can result in serious personal injury.

Stop the engine and wait for all moving parts to stop before leaving the operating position.

Operating Tips

General Mowing Tips

- Clear the area of sticks, stones, wire, branches, and other debris that the blade could hit.
- Avoid striking solid objects with the blade. Never deliberately mow over any object.
- If the mower strikes an object or starts to vibrate, immediately stop the engine, disconnect the wire from the spark plug, and examine the mower for damage.
- For best performance, install a new blade before the cutting season begins.
- Replace the blade when necessary with a Toro replacement blade.

Cutting Grass

- Cut only about a third of the grass blade at a time. Do not cut below the 2 inch (51 mm) setting unless the grass is sparse or it is late fall when grass growth begins to slow down. Refer to Adjusting the Cutting Height.
- When cutting grass over 6 inches (15 cm) tall, mow at the highest cutting height setting and walk slower; then mow again at a lower setting for the best lawn appearance. If the grass is too long, the mower may plug and cause the engine to stall.
- Mow only dry grass or leaves. Wet grass and leaves tend to clump on the yard and can cause the mower to plug or the engine to stall.

  ⚠ WARNING

  Wet grass or leaves can cause serious injury if you slip and contact the blade. Mow only in dry conditions.

- Alternate the mowing direction. This helps disperse the clippings over the lawn for even fertilization.
- If the finished lawn appearance is unsatisfactory, try one or more of the following:
  - Replace the blade or have it sharpened.
  - Walk at a slower pace while mowing.
  - Raise the cutting height on your mower.
  - Cut the grass more frequently.
  - Overlap cutting swaths instead of cutting a full swath with each pass.
  - Set the cutting height on the front wheels one notch lower than the rear wheels. For example, set the front wheels at 2 inches (51 mm) and the rear wheels at 2-1/2 inches (64 mm).

Cutting Leaves

- After cutting the lawn, ensure that half of the lawn shows through the cut leaf cover. You may need to make more than one pass over the leaves.
- If there are more than 5 inches (13 cm) of leaves on the lawn, set the front cutting height one or two notches higher than the rear cutting height.
- Slow down your mowing speed if the mower does not cut the leaves finely enough.

Maintenance

Note: Determine the left and right sides of the machine from the normal operating position.

Recommended Maintenance Schedule(s)

Maintenance Service Interval	Maintenance Procedure
After the first 5 hours	• Change the engine oil.
Before each use or daily	• Check the engine oil level. • Ensure that the engine stops within 3 seconds after releasing the blade control bar. • Check the air cleaner for dirt and /or damage and clean or replace it if necessary. • Clean grass clippings and dirt from under the mower.
Before storage	• Empty the fuel tank before repairs as directed and before annual storage. • Clean the cooling system; remove grass clippings, debris, or dirt from the engine air cooling fins and starter. Clean the system more frequently in dirty or high-chaff conditions.
Yearly	• Clean the air filter (more frequently in dusty operating conditions). • Change the engine oil. • Replace the blade or have it sharpened (more frequently if the edge dulls quickly).

Preparing for Maintenance

1. Stop the engine and wait for all moving parts to stop.
2. Disconnect the spark plug wire from the spark plug (Figure 19) before performing any maintenance procedure.

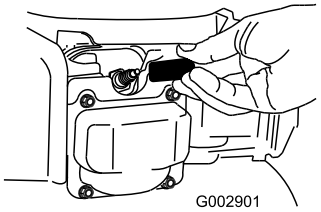

Figure 19

3. After performing the maintenance procedure(s), connect the spark plug wire to the spark plug.

Important: Before tipping the mower to change the oil or replace the blade, allow the fuel tank to run dry through normal usage. If you must tip the mower prior to running out of fuel, use a hand fuel pump to remove the fuel. Always tip the mower onto its side with the air filter up.

⚠ WARNING

Tipping the mower may cause the fuel to leak. Gasoline is flammable, explosive and can cause personal injury.

Run the engine dry or remove the gasoline with a hand pump; never siphon.

Servicing the Air Cleaner

Service Interval: Before each use or daily

Yearly

1. Press down on the latch tabs on top of the air cleaner cover (Figure 20).

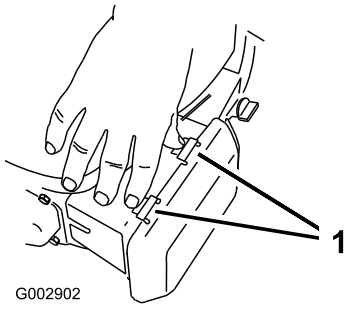

Figure 20

1. Latch tabs

2. Open the cover.
3. Remove the air filter (Figure 21).

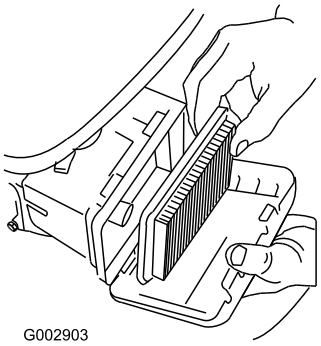

Figure 21

4. If the air filter is damaged or is wet with oil or fuel, replace it.
5. If the air filter is dirty, tap it on a hard surface several times or blow compressed air less than 30 psi (207 kPa) through the side of the filter that faces the engine.

   Note: Do not brush the dirt off the filter; brushing forces dirt into the fibers.
6. Remove dirt from the air cleaner body and cover using a moist rag. **Do not wipe dirt into the air duct.**
7. Install the filter into the air cleaner.
8. Close the cover.

Changing the Engine Oil

Service Interval: After the first 5 hours

Yearly

Change the engine oil after the first 5 operating hours; change it yearly thereafter.

Run the engine a few minutes before changing the oil to warm it. Warm oil flows better and carries more contaminants.

1. Perform the pre-maintenance procedures; refer to Preparing for Maintenance.
2. Remove the dipstick (Figure 22).

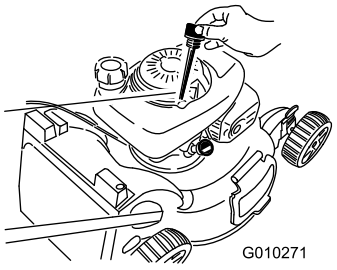

Figure 22

3. Tip the mower onto its side, with the air filter up, to drain the used oil out through the oil fill tube (Figure 23).

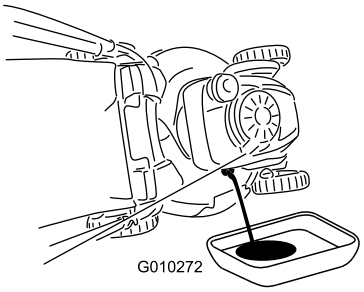

Figure 23

4. **Slowly** pour oil into the oil fill tube, periodically checking the level with the dipstick, until the dipstick indicates that the engine is full as illustrated in Figure 24. **Do not overfill.** (Max. fill: 0.58 quart (0.55 l), type: SAE 30 detergent oil with an API service classification of SH, SJ, SL, or higher.)

   Note: If you overfill the engine, pour some oil out of it.

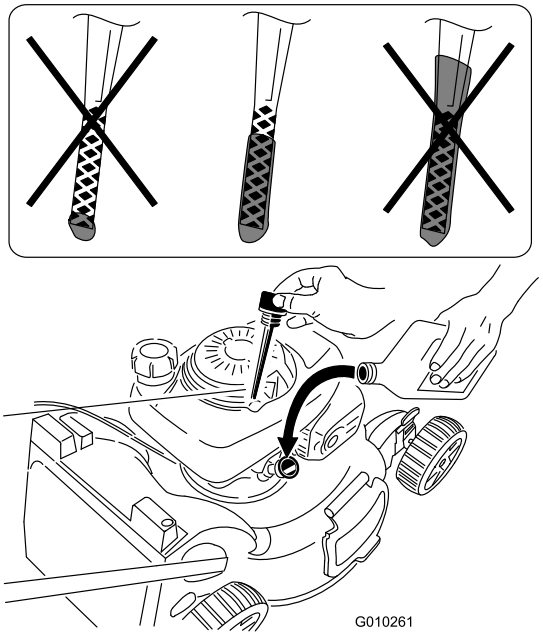

Figure 24

5. Install the dipstick securely.
6. Dispose of the used oil properly at a local recycling center.

Replacing the Blade

Service Interval: Yearly

Important: ***You will need a torque wrench to install the blade properly.*** **If you do not have a torque**

wrench or are uncomfortable performing this procedure, contact an Authorized Service Dealer.

Examine the blade whenever you run out of gasoline. If the blade is damaged or cracked, replace it immediately. If the blade edge is dull or nicked, have it sharpened or replace it.

⚠ WARNING

The blade is sharp; contacting the blade can result in serious personal injury.

Wear gloves when servicing the blade.

1. Disconnect the spark plug wire from the spark plug. Refer to Preparing for Maintenance.
2. Tip the mower onto its side, with the air filter up.
3. Use a block of wood to hold the blade steady (Figure 25).

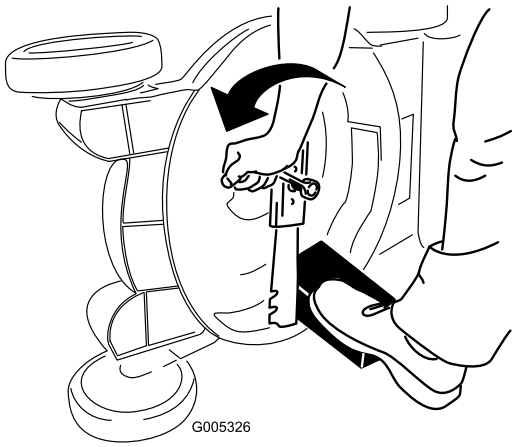

Figure 25

4. Remove the blade, saving all mounting hardware (Figure 25).
5. Install the new blade and all mounting hardware (Figure 26).

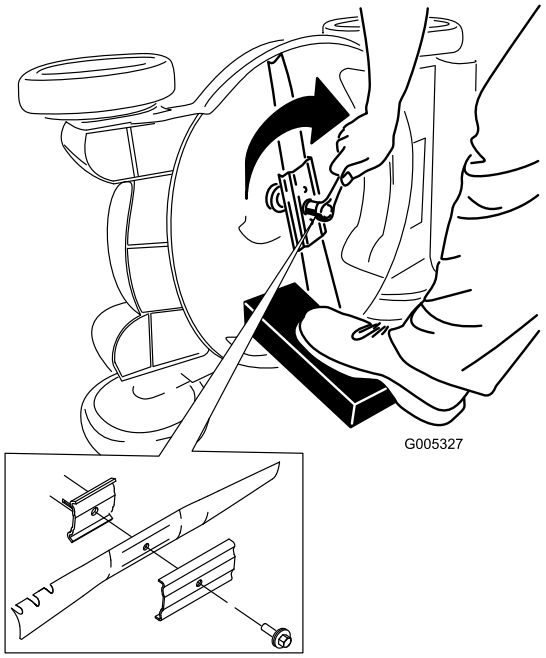

Figure 26

Important: Position the curved ends of the blade to point toward the mower housing.

6. **Use a torque wrench to tighten the blade bolt to 60 ft-lb (82 N-m).**

Important: A bolt torqued to 60 ft-lb (82 N-m) is very tight. While holding the blade with a block of wood, put your weight behind the ratchet or wrench and tighten the bolt securely. This bolt is very difficult to overtighten.

Cleaning the Mower

Service Interval: Before each use or daily

⚠ WARNING

The mower may dislodge material from under the mower housing.

- **Wear eye protection.**
- **Stay in the operating position (behind the handle) when the engine is running.**
- **Do not allow bystanders in the area.**

For best results, clean the mower soon after you have completed mowing.

1. Lower the mower to its lowest cutting height setting. Refer to Adjusting the Cutting Height.
2. Move the mower onto a flat paved surface.
3. Attach a garden hose that is connected to a water supply to the washout port on the mower housing (Figure 27).

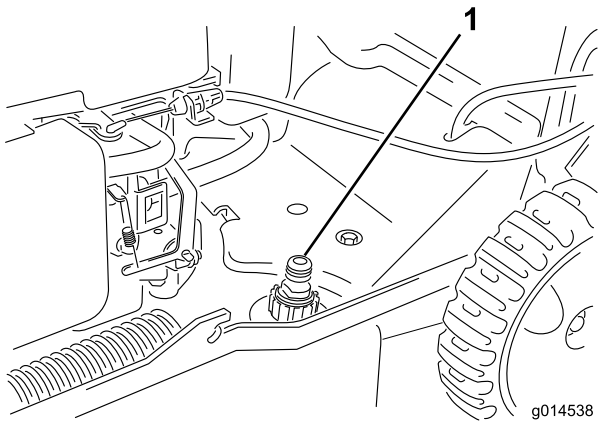

Figure 27

1. Washout port

4. Turn the water on.
5. Start the engine and run it until there are no more clippings that come out from under the mower housing.
6. Stop the engine.
7. Shut off the water and disconnect the garden hose from the mower.
8. Start the engine and run it for a few minutes to dry the housing.

Storage

Store the mower in a cool, clean, dry place.

Preparing the Mower for Storage

⚠ WARNING

Gasoline vapors can explode.

- **Do not store gasoline more than 30 days.**
- **Do not store the mower in an enclosure near an open flame.**
- **Allow the engine to cool before storing it.**

1. On the last refueling of the year, add fuel stabilizer to the fuel as directed by the engine manufacturer.
2. Run the mower until the engine stops from running out of fuel.
3. Prime the engine and start it again.
4. Allow the engine to run until it stops. When you can no longer start the engine, it is sufficiently dry.
5. Disconnect the wire from the spark plug.
6. Remove the spark plug, add 1 oz. (30 ml) of oil through the spark plug hole, and pull the starter rope **slowly** several times to distribute oil throughout the cylinder to prevent cylinder corrosion during the off-season.
7. Install the spark plug and tighten it with a torque wrench to 15 ft-lb (20 N-m).
8. Tighten all nuts, bolts, and screws.

Folding the Handle

1. Unlock the handle locks and rotate the handle forward to one of two positions.

   Important: Route the cables to the outside of the handle knobs as you fold the upper handle.

   - For the shortest height, rotate the handle forward until it rests on the front wheels (Figure 28).

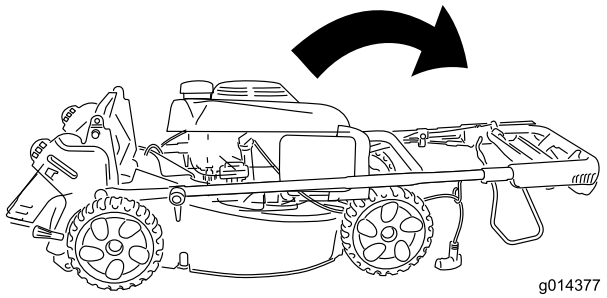

Figure 28

   - To store your mower in the smallest amount floor space, stop the handle in the vertical position (shown in Figure 29) and secure the handle locks.

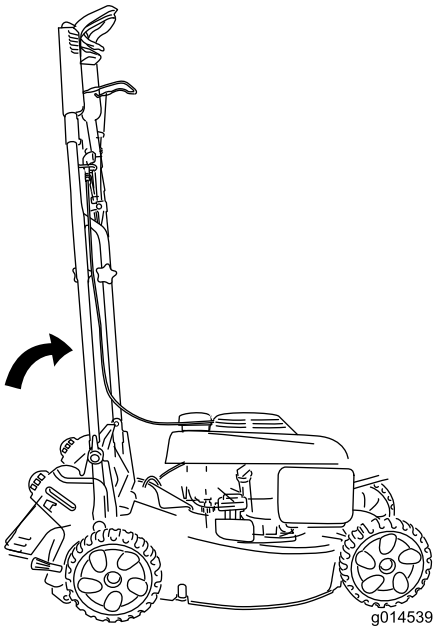

Figure 29

2. To unfold the handle, refer to Unfolding the Handle in the Setup section.

Troubleshooting

Problem	Possible Cause	Corrective Action
The engine does not start	1. The wire is not connected to the spark plug.	1. Connect the wire to the spark plug.
	2. The primer has not been pressed.	2. Press the primer 3 times.
	3. The fuel cap vent hole is plugged.	3. Clean the fuel cap vent hole or replace the fuel cap.
	4. The spark plug is pitted, fouled, or the gap is incorrect.	4. Check the spark plug and adjust the gap if necessary. Replace the spark plug if it is pitted, fouled, or cracked.
	5. The fuel tank is empty or the fuel system contains stale fuel.	5. Drain and/or fill the fuel tank with fresh gasoline. If the problem persists, contact an Authorized Service Dealer.
The engine starts hard or loses power	1. The primer has not been pressed.	1. Press the primer 3 times.
	2. The fuel cap vent hole is plugged.	2. Clean the fuel cap vent hole or replace the fuel cap.
	3. The air filter element is dirty and is restricting the air flow.	3. Clean the air filter pre-cleaner and/or replace the paper air filter.
	4. The underside of the mower housing contains clippings and debris.	4. Clean under the mower housing.
	5. The spark plug is pitted, fouled, or the gap is incorrect.	5. Check the spark plug and adjust the gap if necessary. Replace the spark plug if it is pitted, fouled, or cracked.
	6. The engine oil level is too low, too high, or excessively dirty.	6. Check the engine oil. Change the oil if it is dirty; add or drain the oil to adjust the oil level to the Full mark on the dipstick.
	7. The fuel tank contains stale fuel.	7. Drain and fill the fuel tank with fresh gasoline.
The engine runs rough	1. The primer has not been pressed.	1. Press the primer 3 times.
	2. The wire is not connected to the spark plug.	2. Connect the wire to the spark plug.
	3. The spark plug is pitted, fouled, or the gap is incorrect.	3. Check the spark plug and adjust the gap if necessary. Replace the spark plug if it is pitted, fouled, or cracked.
	4. The air filter element is dirty and is restricting the air flow.	4. Clean the air filter pre-cleaner and/or replace the paper air filter.
The mower or engine vibrates excessively	1. The underside of the mower housing contains clippings and debris.	1. Clean under the mower housing.
	2. The engine mounting bolts are loose.	2. Tighten the engine mounting bolts.
	3. The blade mounting nuts are loose.	3. Tighten the blade mounting nuts.
	4. The blade is bent or is out of balance.	4. Balance the blade. If the blade is bent, replace it.
There is an uneven cutting pattern	1. You are mowing in the same pattern repeatedly.	1. Change the mowing pattern.
	2. All 4 wheels are not at the same height.	2. Place all 4 wheels at the same height.
	3. The underside of the mower housing contains clippings and debris.	3. Clean under the mower housing.
	4. The blade is dull.	4. Sharpen and balance the blade.
The mower does not self-propel	1. There is debris under the belt cover.	1. Clean the debris from under the belt cover.
	2. The self-propel drive cable is out of adjustment or is damaged.	2. Adjust the self-propel drive cable. Replace the cable if necessary.

Notes:

Notes:

International Distributor List

Distributor:	Country:	Phone Number:
Atlantis Su ve Sulama Sisstemleri Lt	Turkey	90 216 344 86 74
Balama Prima Engineering Equip.	Hong Kong	852 2155 2163
B-Ray Corporation	Korea	82 32 551 2076
Casco Sales Company	Puerto Rico	787 788 8383
Ceres S.A.	Costa Rica	506 239 1138
CSSC Turf Equipment (pvt) Ltd.	Sri Lanka	94 11 2746100
Cyril Johnston & Co.	Northern Ireland	44 2890 813 121
Equiver	Mexico	52 55 539 95444
Femco S.A.	Guatemala	502 442 3277
G.Y.K. Company Ltd.	Japan	81 726 325 861
Geomechaniki of Athens	Greece	30 10 935 0054
Guandong Golden Star	China	86 20 876 51338
Hako Ground and Garden	Sweden	46 35 10 0000
Hako Ground and Garden	Norway	47 22 90 7760
Hayter Limited (U.K.)	United Kingdom	44 1279 723 444
Hydroturf Int. Co Dubai	United Arab Emirates	97 14 347 9479
Hydroturf Egypt LLC	Egypt	202 519 4308
Ibea S.P.A.	Italy	39 0331 853611
Irriamc	Portugal	351 21 238 8260
Irrigation Products Int'l Pvt Ltd.	India	86 22 83960789
Jean Heybroek b.v.	Netherlands	31 30 639 4611
Lely (U.K.) Limited	United Kingdom	44 1480 226 800
Maquiver S.A.	Colombia	57 1 236 4079
Maruyama Mfg. Co. Inc.	Japan	81 3 3252 2285
Metra Kft	Hungary	36 1 326 3880
Mountfield a.s.	Czech Republic	420 255 704 220
Munditol S.A.	Argentina	54 11 4 821 9999
Oslinger Turf Equipment SA	Ecuador	593 4 239 6970
Oy Hako Ground and Garden Ab	Finland	358 987 00733
Parkland Products Ltd.	New Zealand	64 3 34 93760
Prochaska & Cie	Austria	43 1 278 5100
RT Cohen 2004 Ltd.	Israel	972 986 17979
Riversa	Spain	34 9 52 83 7500
Roth Motorgerate GmBh & Co.	Germany	49 7144 2050
Sc Svend Carlsen A/S	Denmark	45 66 109 200
Solvert S.A.S.	France	33 1 30 81 77 00
Spypros Stavrinides Limited	Cyprus	357 22 434131
Surge Systems India Limited	India	91 1 292299901
T-Markt Logistics Ltd.	Hungary	36 26 525 500
Toro Australia	Australia	61 3 9580 7355
Toro Europe BVBA	Belgium	32 14 562 960

The Toro Warranty

Conditions and Products Covered

The Toro® Company and its affiliate, Toro Warranty Company, pursuant to an agreement between them, jointly promise to repair the Toro Product listed below if used for residential purposes* if defective in materials or workmanship.

The following time periods apply from the date of purchase:

Products	Warranty Period
Walk Power Mowers	2 year limited warranty
Rear Engine Riders	2 year limited warranty
Lawn & Garden Tractors	2 year limited warranty
Electric Hand Held Products	2 year limited warranty
Snowthrowers	2 year limited warranty
Consumer Zero Turn	2 year limited warranty

*Original Purchaser means the person who originally purchased the Toro Product

*Residential purposes means use of the product on the same lot as your home. Use at more than one location, or institutional or rental use, is considered commercial use, and the commercial use warranty would apply.

Limited Warranty for Commercial Use

Toro Consumer Products and attachments used for commercial, institutional, or rental use, are warranted against defects in materials or workmanship for the following time periods from the date of original purchase:

Products	Warranty Period
Walk Power Mowers	90 day warranty
Rear Engine Riders	90 day warranty
Lawn & Garden Tractors	90 day warranty
Electric Hand Held Products	90 day warranty
Snowthrowers	90 day warranty
Consumer Zero Turn	45 day warranty

Instructions for Obtaining Warranty Service

If you think that your Toro Product contains a defect in materials or workmanship, follow this procedure:

1. Contact your seller to arrange service of the product. If for any reason it is impossible for you to contact your seller, you may contact any Toro Authorized Distributor to arrange service.
2. Bring the product and your proof of purchase (sales receipt) to the Service Dealer. If for any reason you are dissatisfied with the Service Dealer's analysis or with the assistance provided, contact us at:

   Customer Care Department, Consumer Division
   The Toro Company
   8111 Lyndale Avenue South
   Bloomington, MN 55420-1196
   Manager: Technical Product Support: 001–952–887–8248

   See attached Distributor List

Owner Responsibilities

You must maintain your Toro Product by following the maintenance procedures described in the *Operator's Manual*. Such routine maintenance, whether performed by a dealer or by you, is at your expense.

Items and Conditions Not Covered

This express warranty does not cover the following:

- Cost of regular maintenance service or wear parts, such as rotor blades (paddles), scraper blades, belts, fuel, lubricants, oil changes, spark plugs, cable/linkage or brake adjustments
- Any product or part which has been altered or misused and requires replacement or repair due to accidents or lack of proper maintenance
- Repairs necessary due to failure to use fresh fuel (less than one month old), or failure to properly prepare the unit prior to any period of non-use over one month
- Engine and transmission. These are covered by the appropriate manufacturer's guarantees with separate terms and conditions

All repairs covered by these warranties must be performed by an Authorized Toro Service Dealer using Toro approved replacement parts.

General Conditions

The purchaser is covered by the national laws of each country. The rights to which the purchaser is entitled with the support of these laws are not restricted by this warranty.