Form No. 3361-357 Rev C

TORO®

Count on it.

Parts Catalog

Reelmaster® 2000-D

Model No. 03431—Serial No. 290000001 and Up

Register at www.Toro.com.

Original Instructions (EN)

Ordering Replacement Parts

To order replacement parts, please supply the part number, the quantity, and the description of each part desired.

Understanding Reference Numbers

Each identified part in an illustration has a reference number. The reference number for a part also appears in the parts list, along with other information about the part.

This catalog uses two special reference number formats, one to indicate parts in a service assembly and another to indicate the quantity of a given part in an illustration.

Service Assembly Reference Numbers

Parts in service assemblies have reference numbers in the form a:b. The a represents the reference number of the entire service assembly and the b represents a sequential number unique to each part within the service assembly.

For example, a wheel assembly might be identified by reference number 6, the tire by 6:1, the valve by 6:2, and the wheel by 6:3. When you order the assembly identified by reference number 6, you receive all parts identified by reference numbers 6:1,6:2, and 6:3. However, you may also order any part individually. Reference numbers of this type appear in illustration and in parts lists.

Reference Numbers Indicating Quantity

In an illustration, if a reference number indicates more than one part, the reference number has the form nX y. The n represents the quantity of the part, the X is the multiplication symbol, and the y represents the reference number.

For example, in an illustration, the reference number 2X 37 means that two of the parts identified by reference number 37 are indicated.

List of Abbreviations

AR: as required

ASM: assembly

BBC: blade brake control

BHTF: button head thread forming

CARR: carriage

CCW: counter clockwise

CW: clockwise

DEG: degrees

ECM: electronic control module

EXT: external

FH: flat head

GA: gauge

HD: heavy-duty

HF: hex flange

HH: hex head

HHF: hex head flange

HHFTF: hex head flange thread forming

HJ: hex jam

HLH: hex lag head

HOC: height-of-cut

HSBH: hex socket button head

HSFH: hex socket flat head

HSH: hex socket head

HWH: hex washer head

HWHTF: hex washer head thread forming

HYD: hydraulic

LH: left hand

LP: Liquid Propane

NI: nylon insert

NPTF: national pipe thread fine

PFH: phillips flat head

PPH: phillips pan head

PPHTF: phillips pan head thread forming

PRH: phillips round head

PTH: phillips truss head

PTO: power-take-off

RH: right hand

ROPS: roll-over protection system

RRB: rear roller brush

SFH: slotted fillister head

SHH: slotted hex head

SHWH: slotted hex washer head

SPH: slotted pan head

SQH: square head

SRH: slotted round head

STD: standard

TAP: self tapping

TTH: torx truss head

© 2010—The Toro® Company
8111 Lyndale Avenue South
Bloomington, MN 55420

Contact us at www.Toro.com.
Printed in the USA.
All Rights Reserved

Contents

Hood Assembly 4
Skirt and Body Panel Assembly 5
Instrument Panel Assembly 6
Steering Assembly 7
Castor Fork Assembly 8
Fuel Tank and Filter Assembly 9
Engine Assembly 10
Muffler, Air Cleaner and Oil Cooler Assembly 11
Air Cleaner Assembly No. 93-2190 12
Engine Installation Assembly 13
Radiator Assembly 14
Hydraulic Tank and Filter Assembly 15
Hydraulic Pump Assembly 16
Hydraulic Pump Assembly No. 104-3874 17
Gear Pump Assembly No. 106-8130 19
Pump Mount Assembly 20
Traction Control Assembly 21
Hydraulic Motor Installation Assembly 22
Hydraulic Motor Assembly No. 75-9990 23
Hydraulic Motor Assembly No. 93-6888 24
Front Wheel and Brake Assembly 25
Brake Assembly No. 104-7705 26
Hydraulic Valve Installation Assembly 27
Hydraulic Control Valve No. 104-4092 28
Rear Lift Arm Assembly 29
Hydraulic Cylinder Assembly No. 93-6869 30
Front Lift Cylinder Assembly 31
Hydraulic Lift Cylinder Assembly No. 94-5031 32
Manifold Block Assembly No. 106-8149 33
Reel Motor Assembly 34
Gear Motor Assembly No. 115-3413 35
Gear Motor Assembly No. 115-3414 36
Seat Assembly 37
Cylinder Assembly 38
Crankshaft Assembly 39
Cylinder Head Assembly 40
Injection Assembly 41
Rocker Arm Assembly 42
Oil Pan Assembly 43
Gear Cover Assembly 44
Gear Housing Assembly 45
Water Pump Assembly 46
Manifold Assembly 47
Alternator Assembly 48
Gasket Set and Valve Overhaul Kit 49
Attachments and Accessories 50

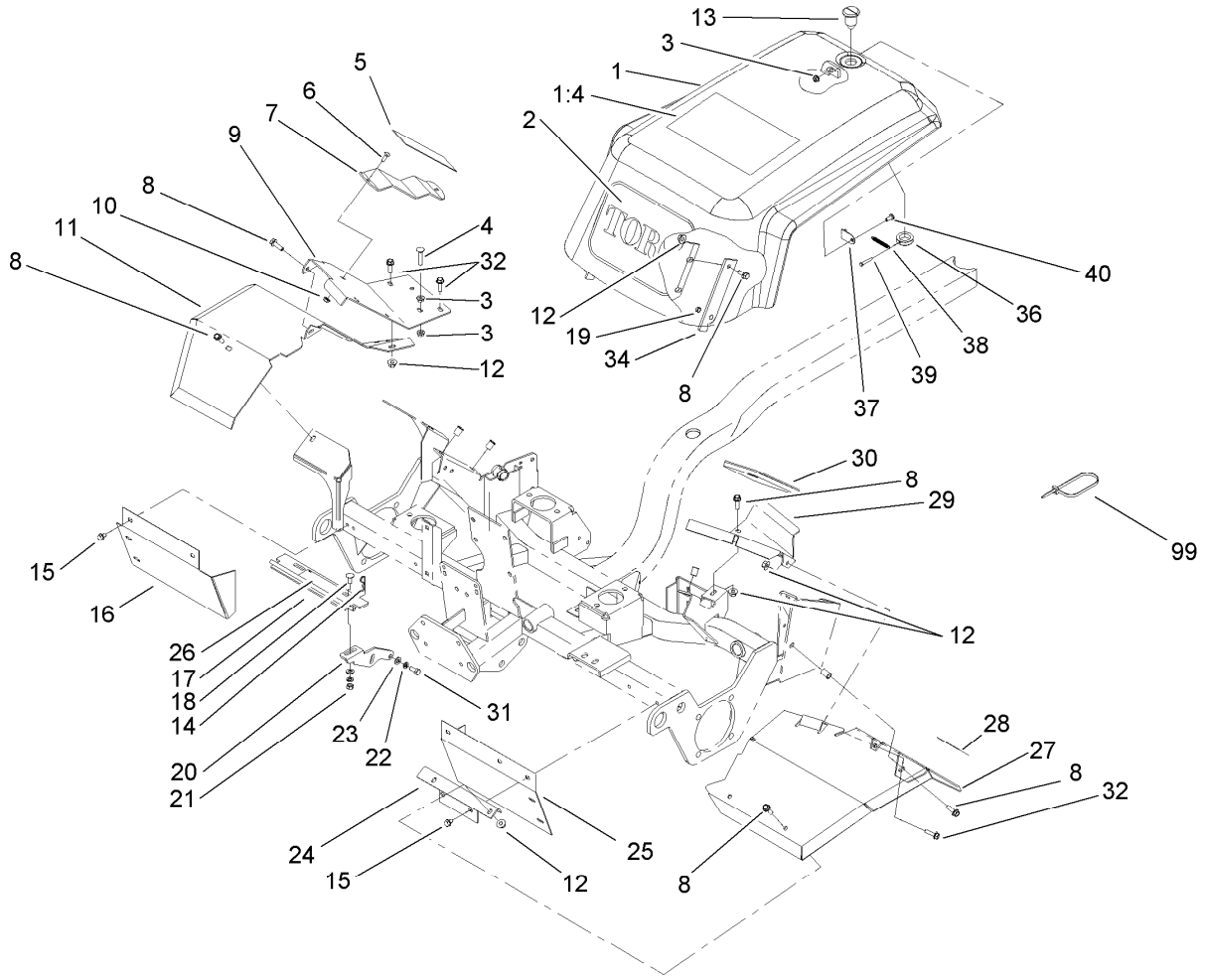

Hood Assembly

Ref.	Part Number	Qty.	Description
1	104-3987	1	Hood ASM
1:4	106-8109	1	Decal
1:5	106-8117	1	Heat Tape Repair Kit ●
2	66-1210	1	Decal
3	32128-33	3	Nut-HF
4	3230-27	1	Screw-CARR
5	76-2260	1	Pad-Footrest
6	3229-1	2	Screw-CARR
7	76-2200-03	1	Footrest-Pedal, Traction
8	3234-5	8	Screw-HHF
9	93-6779-03	1	Footrest-RH
10	32128-33	3	Nut-HF
11	93-6778-01	1	Fender-RH
12	32128-44	16	Nut
13	104-4074	1	Stud-Latch
14	3290-467	1	Pin-Hair
15	32104-32	5	Screw-HWH
16	104-4062-01	1	Shield-Front, RH
17	93-6780-03	1	Hinge ASM
18	3230-2	2	Bolt-CARR
19	256-320	2	Bushing-Nylon
20	93-6742-03	2	Bracket-Hood, Pivot
21	3217-6	2	Nut-Hex
22	3253-4	6	Washer-Lock
23	3256-23	6	Washer-Flat
24	83-8510-01	1	Bracket-Fender, Left
25	83-9800-01	1	Grass Shield-Front, LH
26	94-5056	1	Decal
27	93-6776-01	1	Fender-LH
28	93-7267	1	Decal-Brake
29	83-9710-03	1	Footrest-Pedal, Traction
30	83-9840	1	Pad-Foot
31	322-3	4	Screw-HH
32	3234-17	10	Screw-HHF
34	104-3968-03	2	Bracket-Hood
36	104-4078	1	Collar-Latch
37	104-4079	1	Bracket-Spring
38	104-4080	1	Spring-Extension
39	3290-360	1	Screw-HH
40	3290-145	1	Screw
99	3290-379	2	Tie-Cable

● Not illustrated

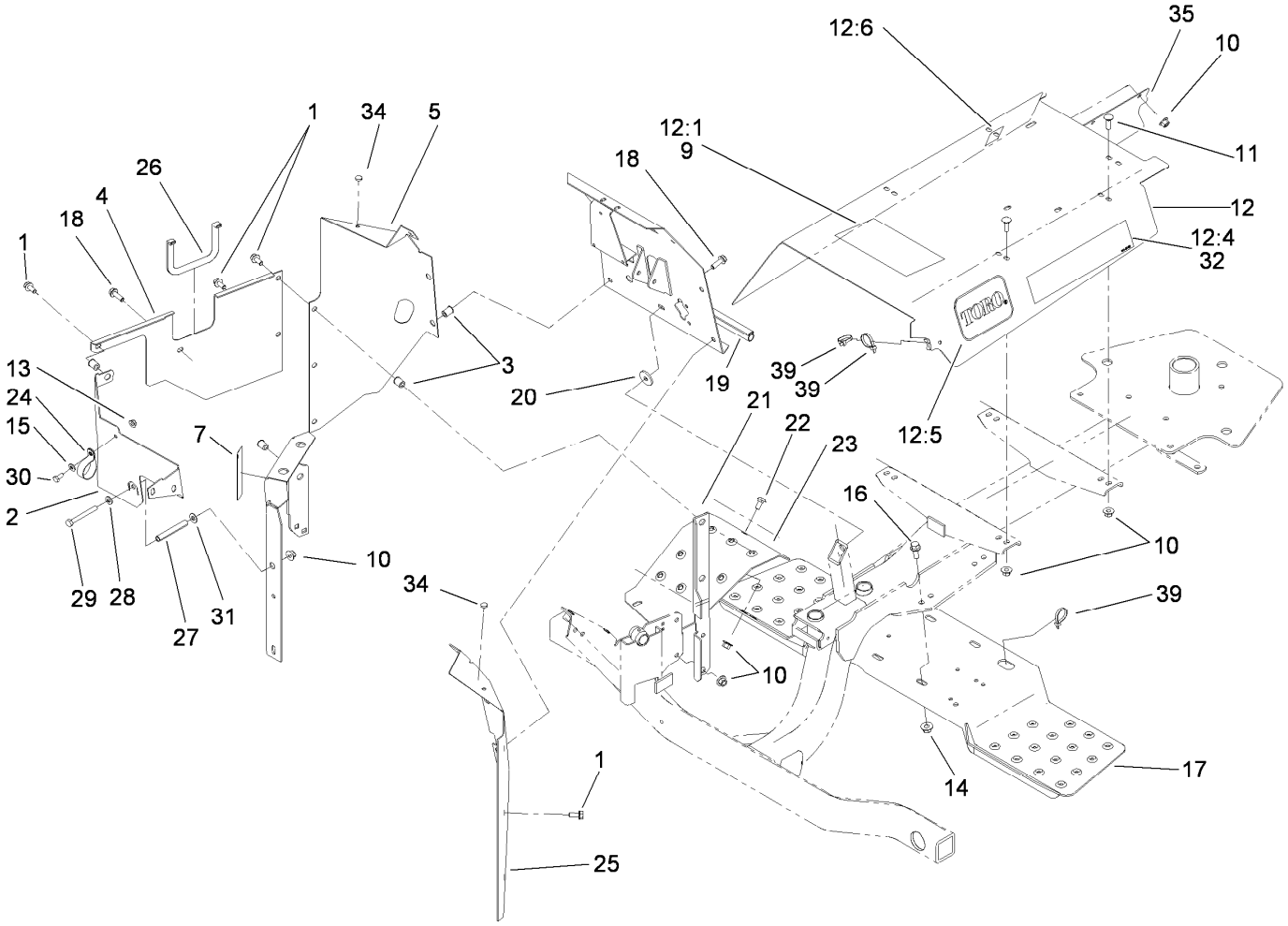

Skirt and Body Panel Assembly

Ref.	Part Number	Qty.	Description
1	3234-5	15	Screw-HHF
2	104-3865-03	1	Panel-Front, RH
3	32148-7	8	Nut-Insert
4	104-4063-03	1	Front Panel ASM
5	104-3932-03	1	Panel-Rear, Right
7	106-8120	1	Decal-Danger, Ce
9	106-8119	1	Decal-Warning, Ce
10	32128-44	13	Nut
11	3230-2	4	Bolt-CARR
12	104-3916	1	Skirt ASM
12:1	104-4096	1	Decal-Warning
12:4	104-3988	2	Decal
12:5	104-3989	2	Decal
12:6	105-4674	1	Decal-Noise
13	32128-33	1	Nut-HF
14	32128-43	4	Nut-Flange
15	3256-22	1	Washer-Flat
16	3234-11	4	Screw-HHF
17	93-6868-03	1	Step-Foot

Ref.	Part Number	Qty.	Description
18	3234-17	2	Screw-HHF
19	76-6471	1	Strip-Seal, Firewall
20	62-7170	1	Spacer-Rubber
21	104-4009-03	1	Angle-Right
22	3230-1	1	Bolt-CARR
23	93-6938-03	1	Shield-Footrest
24	2412-74	1	R-Clamp
25	93-6732-03	1	Panel-Rear, Left
26	104-4060	1	Trim
27	93-6908	1	Spacer-Split
28	3256-23	1	Washer-Flat
29	322-23	1	Screw-HH
30	321-3	1	Screw-HH
31	87-8640	1	Washer-Flat
32	104-4014	1	Decal-Sport, Reelmaster
34	104-4098	2	Seal-Foam
35	104-4086-01	1	Shield-Muffler
39	3290-379	3	Tie-Cable

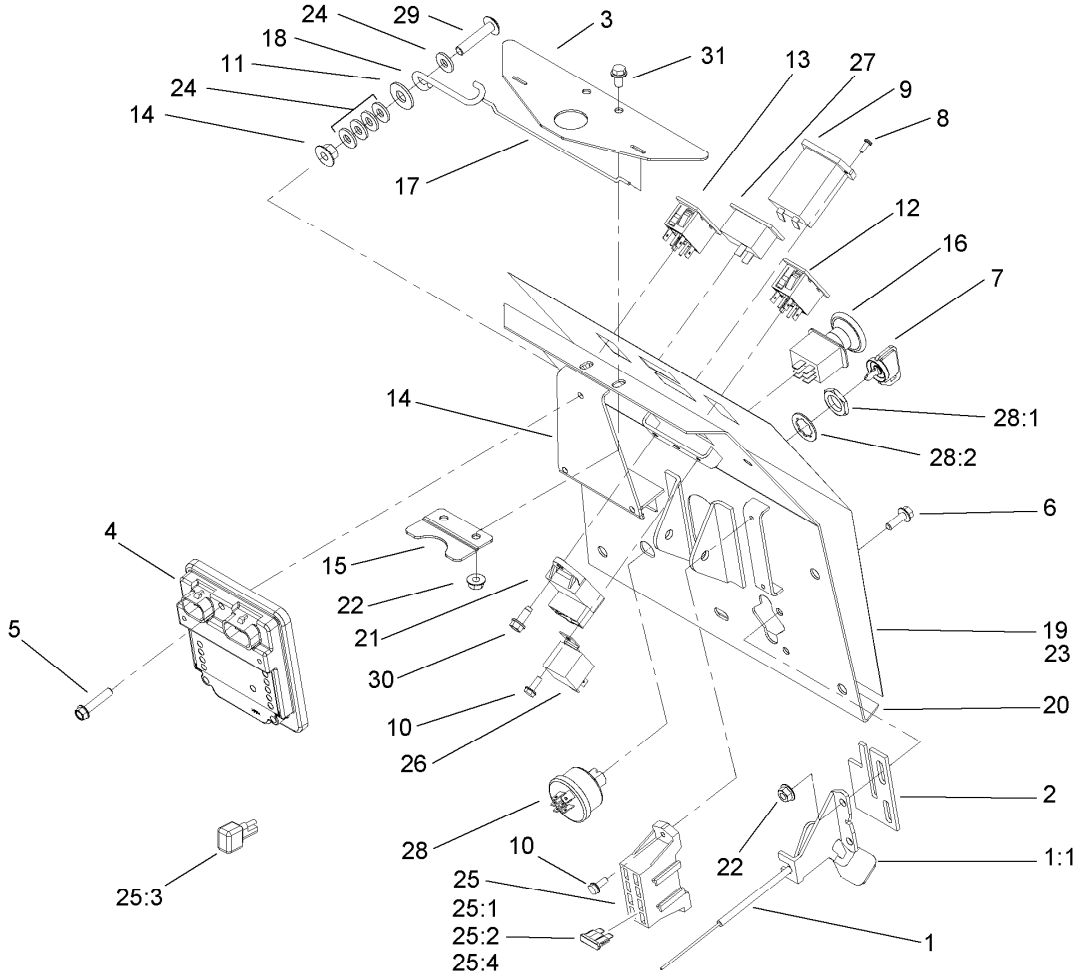

Instrument Panel Assembly

Ref.	Part Number	Qty.	Description
1	104-3967	1	Cable-Control, Throttle
1:1	66-0120	1	Knob
2	93-6743	1	Stop-Throttle
3	104-4075-03	1	Plate-Latch
4	106-9277	1	Module-Control, Standard
5	32144-110	3	Screw-HWH
6	3234-4	2	Screw-HHF
7	63-8360	2	Key-Ignition
8	32144-18	2	Screw-HH
9	75-6820	1	Hourmeter
10	32144-1	3	Screw-Taptite
11	3256-4	1	Washer-Flat
12	100-8070	1	Lamp-Warning
13	100-8071	1	Lamp-Warning
14	32128-44	1	Nut
15	104-4076-03	1	Plate-Spring, Keeper
16	93-9998	1	Switch-PTO
17	104-4077	1	Wire-Form
18	94-5973	1	Hook

Ref.	Part Number	Qty.	Description
19	104-3991	1	Decal
20	104-3864-03	1	Panel-Instrument
21	115-2292	1	Timer-Glow Plug
22	32128-33	4	Nut-HF
23	104-3994	1	Decal
24	3256-2	5	Washer-Flat
25	104-4064	1	Harness-Wire, Main
25:1	218-578	1	Fuse-10 Amp
25:2	109355	1	Fuse-15 Amp
25:3	104-4022	1	Resistor-75 Ohm
25:4	94-6710	1	Fuse-2 Amp
26	99-7435	1	Relay-Power
27	104-4071	1	Light-Indicator, Amber
28	104-2541	1	Switch ASM
28:1	218-461	1	Nut-HH
28:2	3254-5	1	Washer-Tooth, Internal
29	322-41	1	Screw-HH
30	32144-10	1	Screw-HWH
31	3234-13	2	Screw-HHF

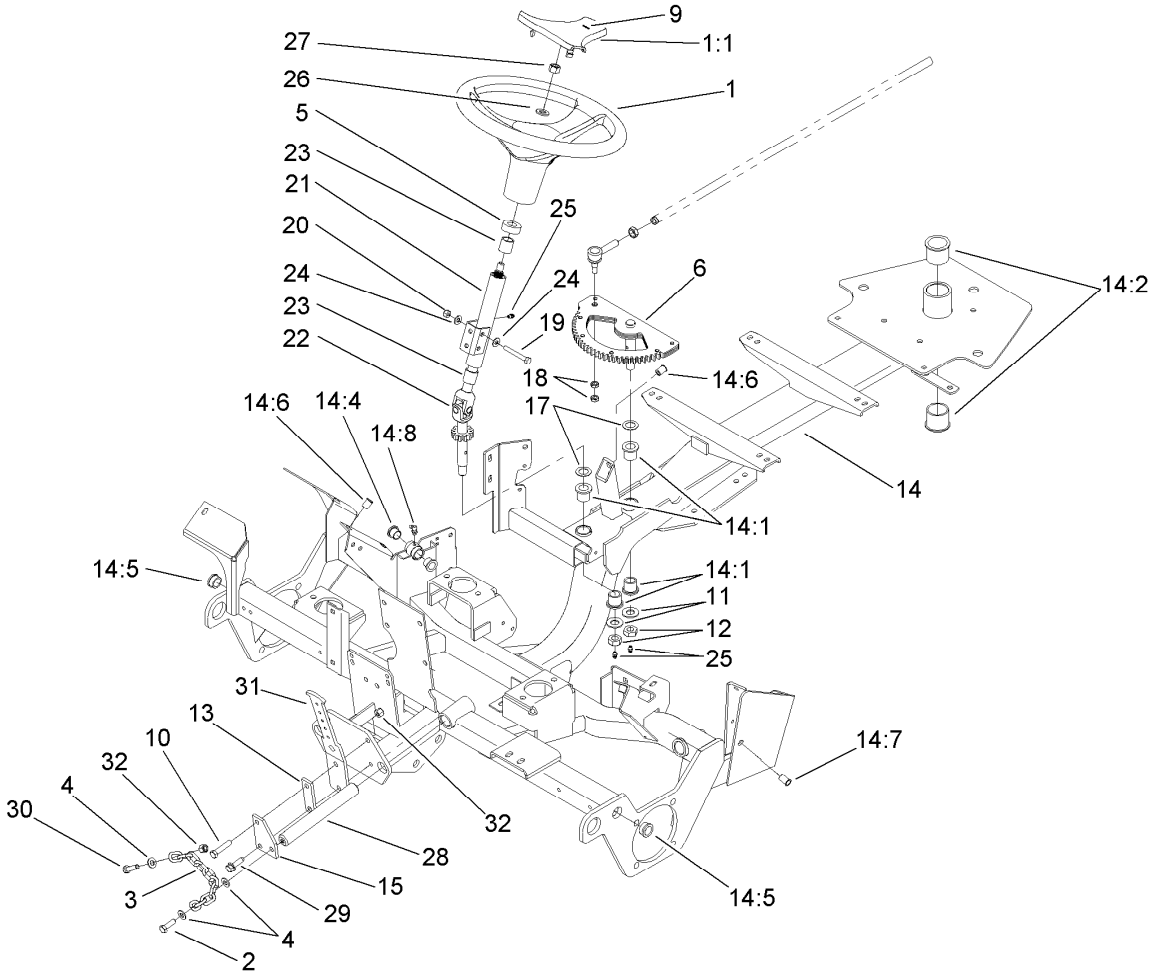

Steering Assembly

Ref.	Part Number	Qty.	Description
1	98-1471	1	Wheel-Steering
1:1	98-1468	1	Cover-Wheel, Steering
2	323-18	2	Screw-HH
3	93-6738	2	Chain
4	3256-24	6	Washer-Flat
5	21-9260	1	Cover-Dust
6	93-6768-03	1	Gear-Sector
9	98-1459	1	Decal
10	323-9	2	Screw-HH
11	3256-27	2	Washer-Flat
12	3296-33	2	Nut-Lock, NI
13	98-3445	2	Spacer
14	104-3913	1	Frame ASM
14:1	106-8125	4	Bushing
14:2	256-245	2	Bushing-Flange
14:4	75-2160	2	Bushing
14:5	256-247	2	Bushing-Flange
14:6	32148-7	4	Nut-Insert
14:7	32148-8	1	Insert-Threaded

Ref.	Part Number	Qty.	Description
14:8	302-60	1	Fitting-Grease
15	98-3446	2	Plate-Reinforcement
17	3-6498	6	Washer-Thrust
18	3220-3	2	Nut-HJ
19	322-12	1	Screw-HH
20	3296-29	1	Nut-Lock, NI
21	93-6769-03	1	Column-Steering
22	94-5969	1	Shaft And Gear-Steering
23	256-27	2	Bushing
24	87-8640	2	Washer-Flat
25	302-5	3	Fitting-Grease
26	3256-26	1	Washer-Flat
27	3296-25	1	Nut-Lock, NI
28	92-1812	2	Shaft-Pivot, Lift
29	32144-109	2	Screw
30	323-7	2	Screw-HH
31	92-1818-01	2	Arm-Spring, Tension
32	3296-39	4	Nut-Lock, NI

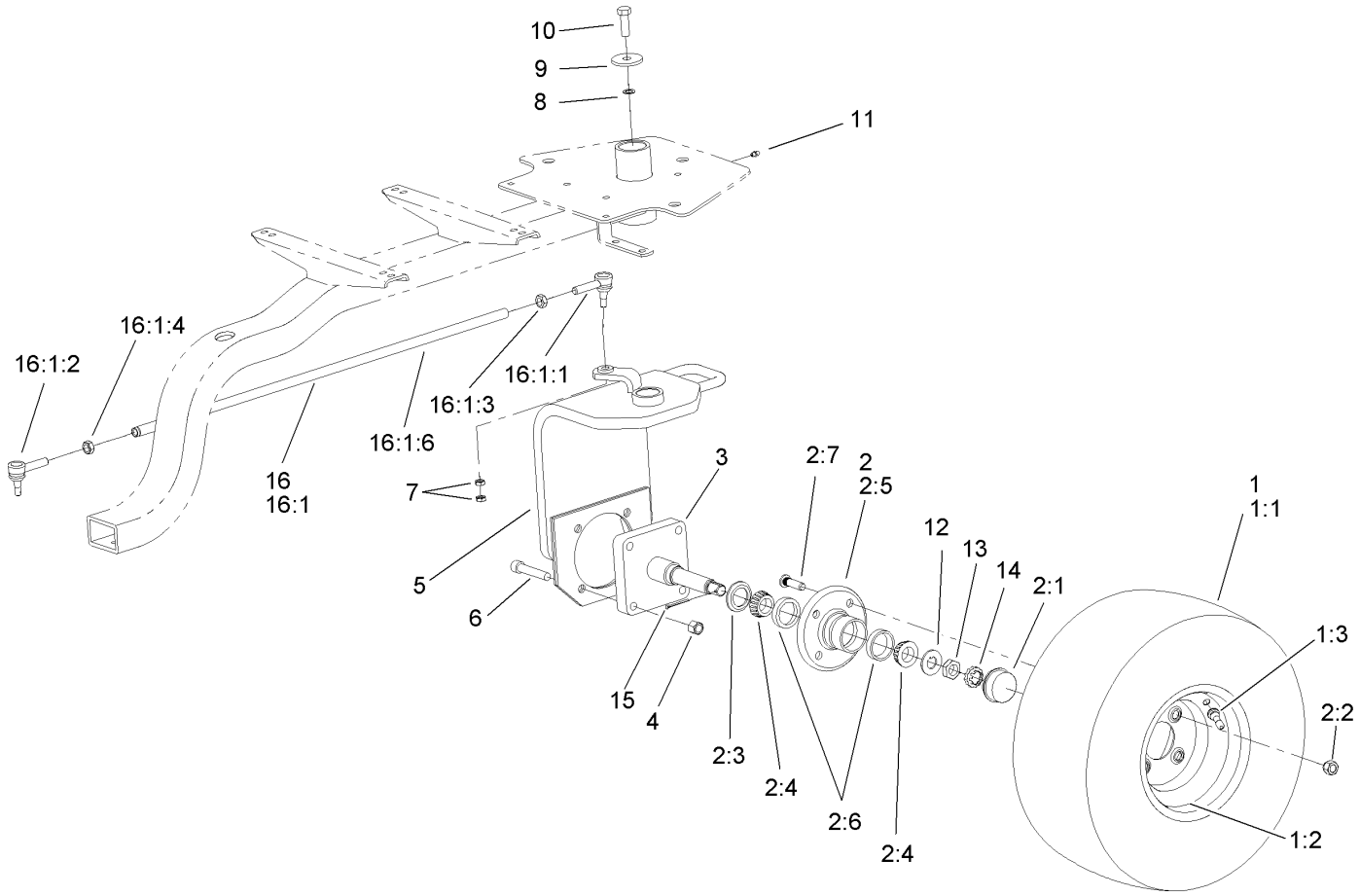

Castor Fork Assembly

Ref.	Part Number	Qty.	Description
1		1	Tire And Wheel ASM ●
1:1	106-8133	1	Rim-8 Inch
1:2	99-4506	1	Tire
1:3	232-27	1	Stem-Valve
2		1	Hub ASM ●
2:1	241-119	1	Cap-Dust
2:2	242-50	4	Nut-Lug
2:3	253-129	1	Seal
2:4	254-94	2	Bearing-Cone, Tapered
2:5	80-6580	1	Hub
2:6	254-72	2	Bearing-Cup, Tapered
2:7	10-6830	4	Stud-Type, Drive
3	104-3966-03	1	2 Wheel Drive Hub ASM
4	3296-23	4	Nut-Lock, NI
5	93-6782-01	1	Fork-Wheel, Rear
6	3274-93	4	Screw-HSH

Ref.	Part Number	Qty.	Description
7	3220-3	2	Nut-HJ
8	3255-2	1	Washer-Lock / EXT
9	75-7730	1	Washer-Thrust
10	325-3	1	Screw-HH
11	302-5	1	Fitting-Grease
12	93-0309	1	Washer-Tab
13	3220-7	1	Nut-Jam
14	93-0307	1	Nut-Lock, Retainer
15	3272-13	1	Pin-Cotter
16		1	Steering Tube ASM ●
16:1		1	Tube-Steering ●
16:1:1	110-9685-03	1	RH Ball Joint ASM
16:1:2	110-9686-03	1	LH Ball Joint ASM
16:1:3	3220-12	1	Nut-HJ (LH Thread)
16:1:4	3220-5	1	Nut-Jam
16:1:6	61-2070-03	1	Tube-Steering

● Not serviced separately

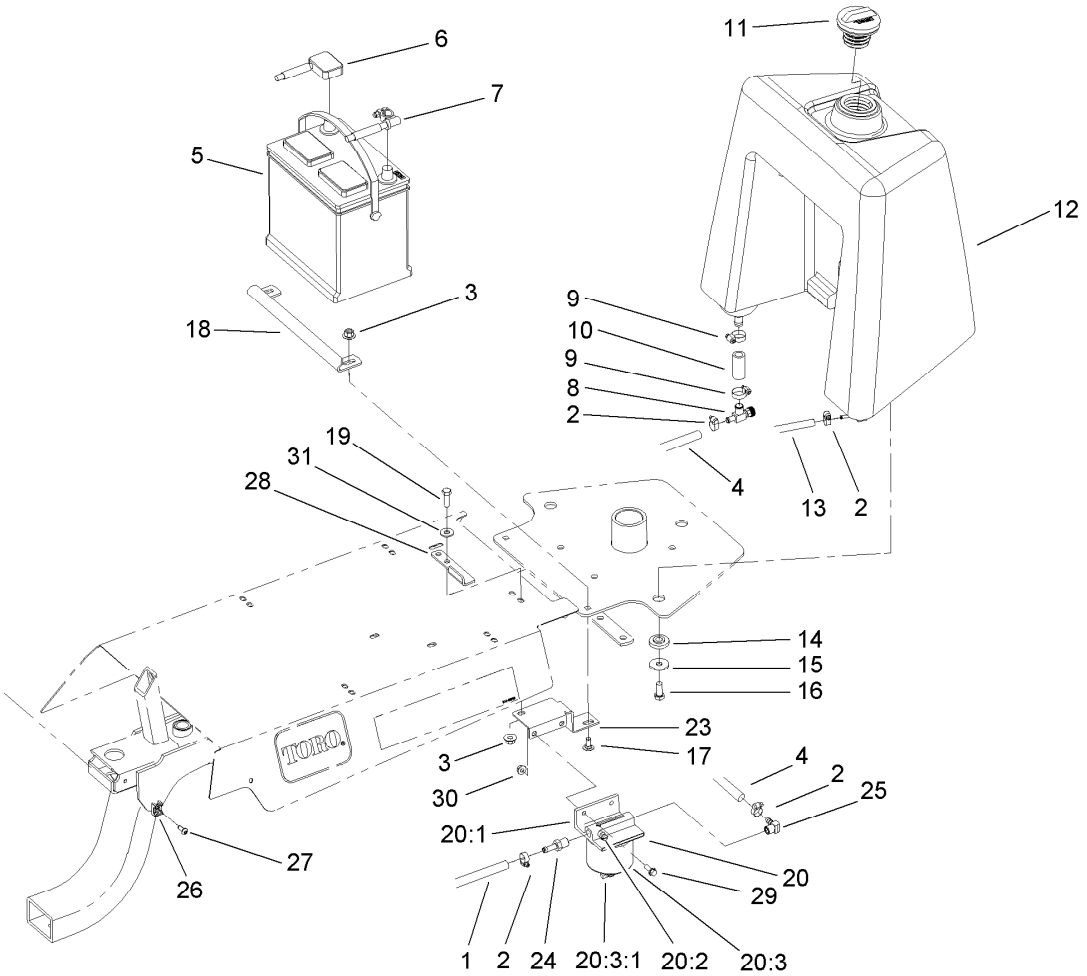

Fuel Tank and Filter Assembly

Ref.	Part Number	Qty.	Description
1	110-8802	1	Hose-Fuel
2	2412-108	4	Clamp-Worm
3	32128-44	4	Nut
4	110-4101	1	Hose-Fuel
5	104-9979	1	Battery
6	104-4061	1	Cable-Battery, Pos
7	94-5980	1	Cable-Battery, Neg
8	56-2520	1	Fitting-Shut Off, Fuel
9	2412-36	2	Clamp-Hose
10	110-8803	1	Hose-Fuel
11	93-3102	1	Cap-Fuel
12	83-8720	1	Tank-Fuel
13	108-3281	1	Hose-Fuel
14	240-11	3	Bushing-Flange
15	63-8410	3	Washer
16	323-5	3	Screw-HH
17	3230-1	2	Bolt-CARR

Ref.	Part Number	Qty.	Description
18	83-9240	1	Bracket-Battery
19	322-5	2	Screw-HH
20	63-7650	1	Separator-Filter / Water
20:1	63-8280	1	Head ASM
20:2	63-8290	1	Vent-Air
20:3	63-8300	1	Element-Spin On
20:3:1	63-8310	1	Valve-Drain
23	104-3947-01	1	Bracket-Filter, Fuel
24	353-783	1	Fitting-Straight
25	353-781	1	Fitting-Elbow
26	3290-509	1	Tie-Mount
27	63-8590	1	Screw
28	104-4028-01	1	Bracket-Stop
29	3234-4	2	Screw-HHF
30	32128-33	2	Nut-HF
31	3256-3	1	Washer-Flat

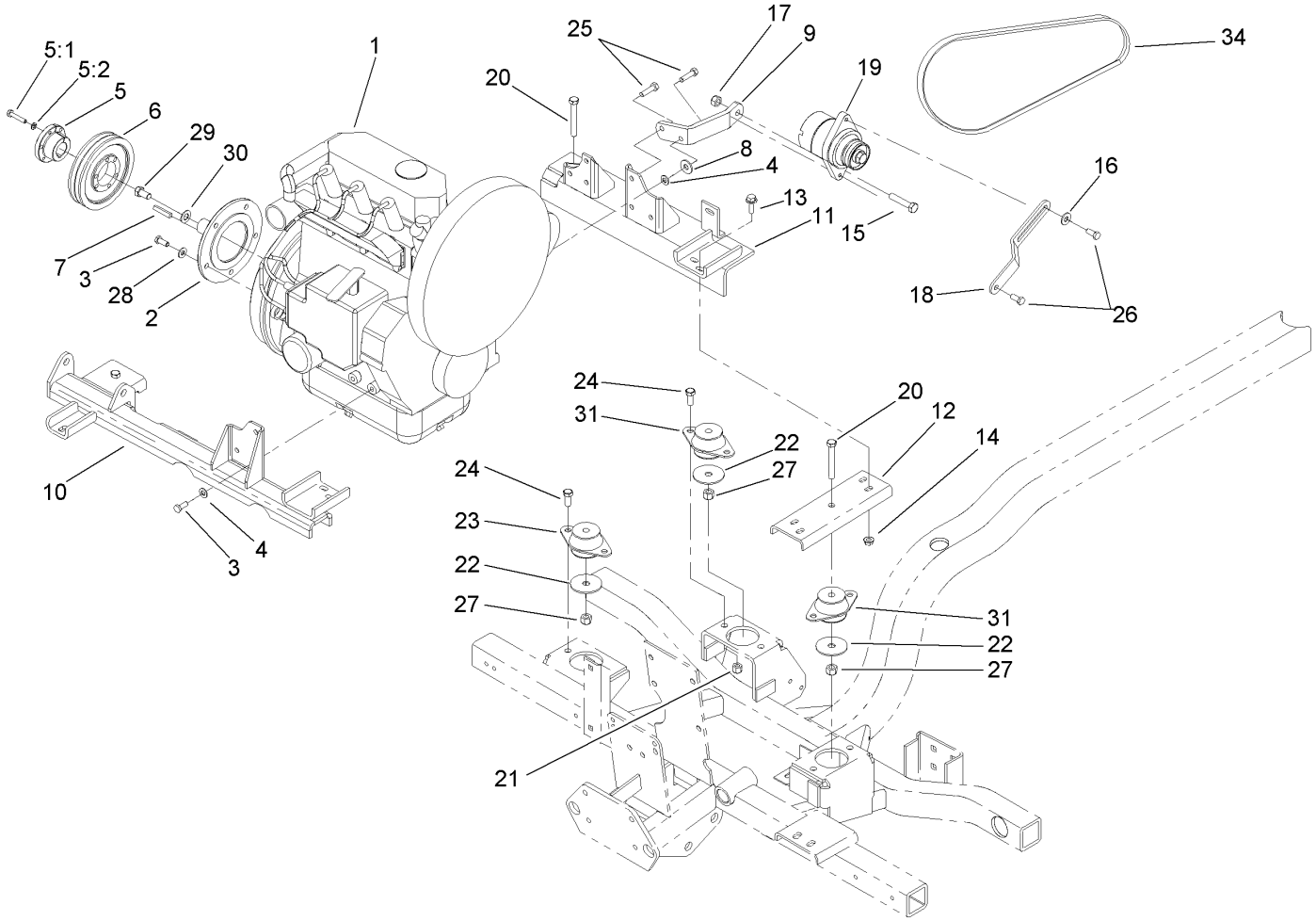

Engine Assembly

Ref.	Part Number	Qty.	Description
1	106-8143	1	Engine-Diahatsu
2	104-3860-03	1	Shaft-Stub, Flywheel
3	33114-020	16	Screw-HH
4	3256-23	12	Washer-Flat
5	61-3340	1	Bushing
5:1	321-13	3	Screw-HH
5:2	3253-2	3	Washer-Lock
6	100-4207	1	Sheave
7	67-7490	1	Key-Square
8	80-6990	1	Washer-Hardened
9	93-2445	1	Bracket-Alternator, Upper
10	104-3869-03	1	Frame-Engine, Front
11	104-3868-03	1	Frame-Engine, Rear
12	104-3870-03	1	Channel-Engine
13	3234-29	4	Screw-HHF
14	32128-20	4	Nut-HF
15	33115-050	1	Screw-HH

Ref.	Part Number	Qty.	Description
16	3256-3	1	Washer-Flat
17	33025-00	1	Nut-Lock, NI
18	93-2446	1	Bracket-Alternator, Lower
19	99-9209	1	Alternator
20	324-11	3	Screw-HH
21	3296-39	6	Nut-Lock, NI
22	87-5100	3	Washer-Snubbing
23	53-9681	1	Mount-Engine
24	323-5	6	Screw-HH
25	33114-030	2	Screw-HH
26	33114-020	2	Screw-HH
27	3296-48	3	Nut-Lock, NI
28	87-8640	5	Washer-Flat
29	3212-2	1	Screw-HH
30	3256-25	1	Washer-Flat
31	53-9680	2	Mount-Engine
34	99-8153	1	Belt-V

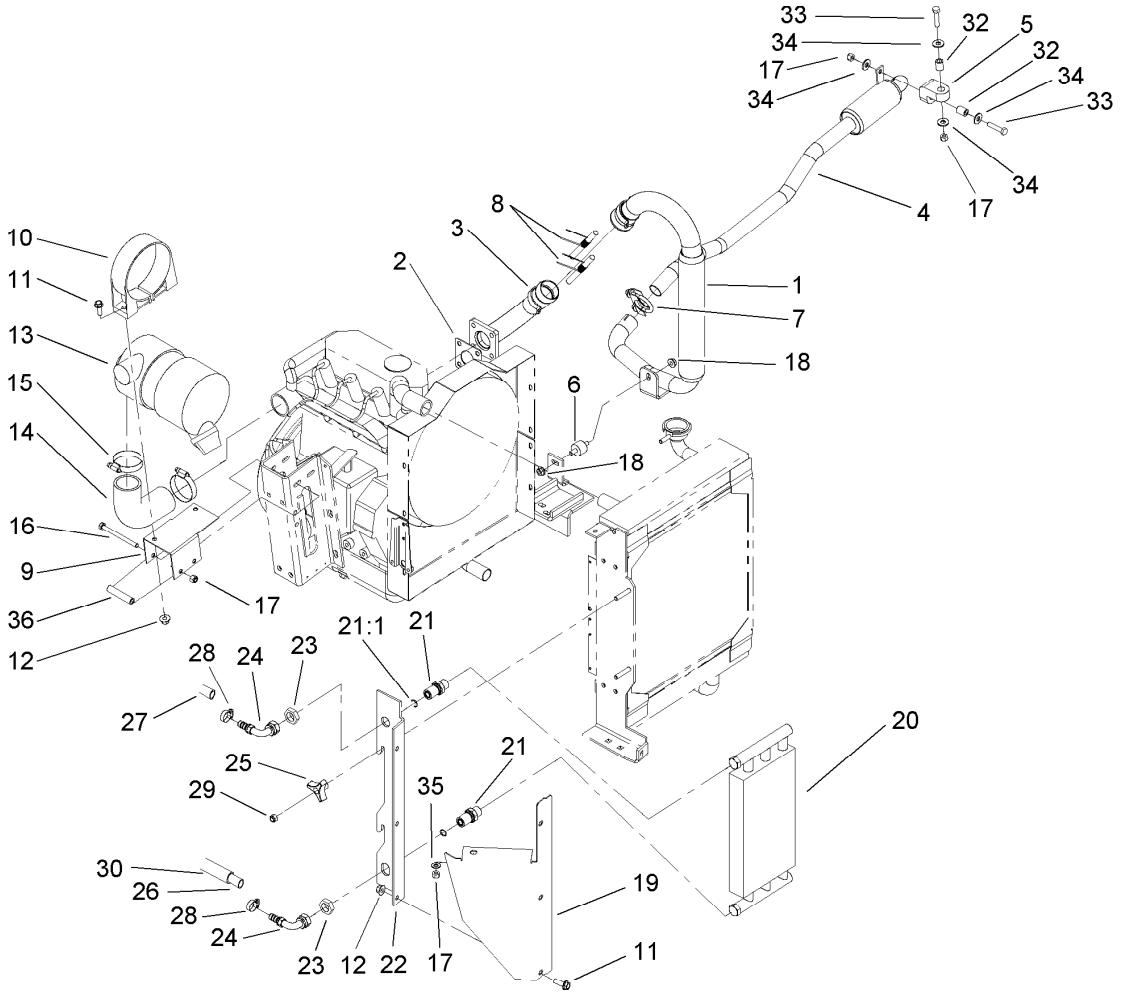

Muffler, Air Cleaner and Oil Cooler Assembly

Ref.	Part Number	Qty.	Description
1	104-4034	1	Muffler
2	99-9179	1	Gasket-Exhaust
3	104-4035	1	Header-Muffler
4	104-4036	1	Tailpipe
5	95-5622	1	Hanger-Rubber
6	104-4038	1	Isolator-Rubber
7	104-4090	1	Clamp-Muffler
8	104-6478	2	Spring-Coupler, Exhaust
9	104-3884-03	1	Bracket-Cleaner, Air
10	95-5806	1	Bracket-Mounting
11	3234-17	5	Screw-HHF
12	32128-44	5	Nut
13	93-2190	1	Air Cleaner ASM
14	104-3908	1	Hose-Intake, Air
15	2412-130	2	Clamp-Hose
16	322-23	2	Screw-HH
17	3296-29	5	Nut-Lock, NI
18	33004-00	2	Nut-HF

Ref.	Part Number	Qty.	Description
19	83-8210-03	1	Panel-Front, Left
20	93-6932	1	Cooler-Oil
21	83-7970	2	Connector
21:1	237-30	1	O-Ring
22	88-6730-03	1	Bracket-Screen, Front
23	340-127	2	Nut-Bulkhead
24	93-6803	2	Fitting-90 DEG
25	73-4740	2	Handle Knob
26	104-4004	1	Hose
27	93-6805	1	Hose
28	2412-36	2	Clamp-Hose
29	32153-3	2	Nut-Hex, Side Deform
30	93-6933	1	Sleeve-Protective
32	93-5023	2	Spacer
33	322-7	2	Screw-HH
34	3256-3	4	Washer-Flat
35	3256-23	1	Washer-Flat
36	106-8121	2	Spacer

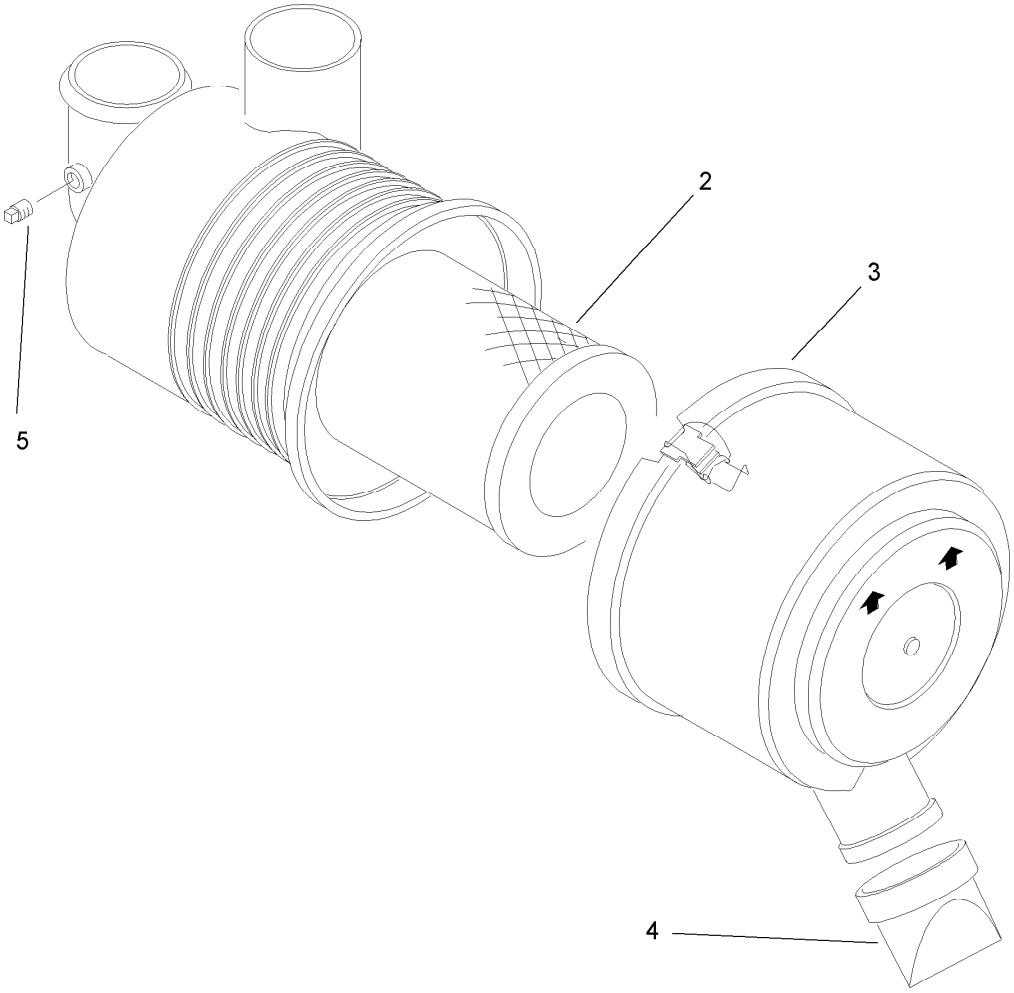

Air Cleaner Assembly No. 93-2190

Ref.	*Part Number*	*Qty.*	*Description*
2	108-3811	1	Filter-Air
3	94-3652	1	Cover ASM
4	87-9400	1	Valve-Vacuator
5	285-17	1	Plug-Pipe

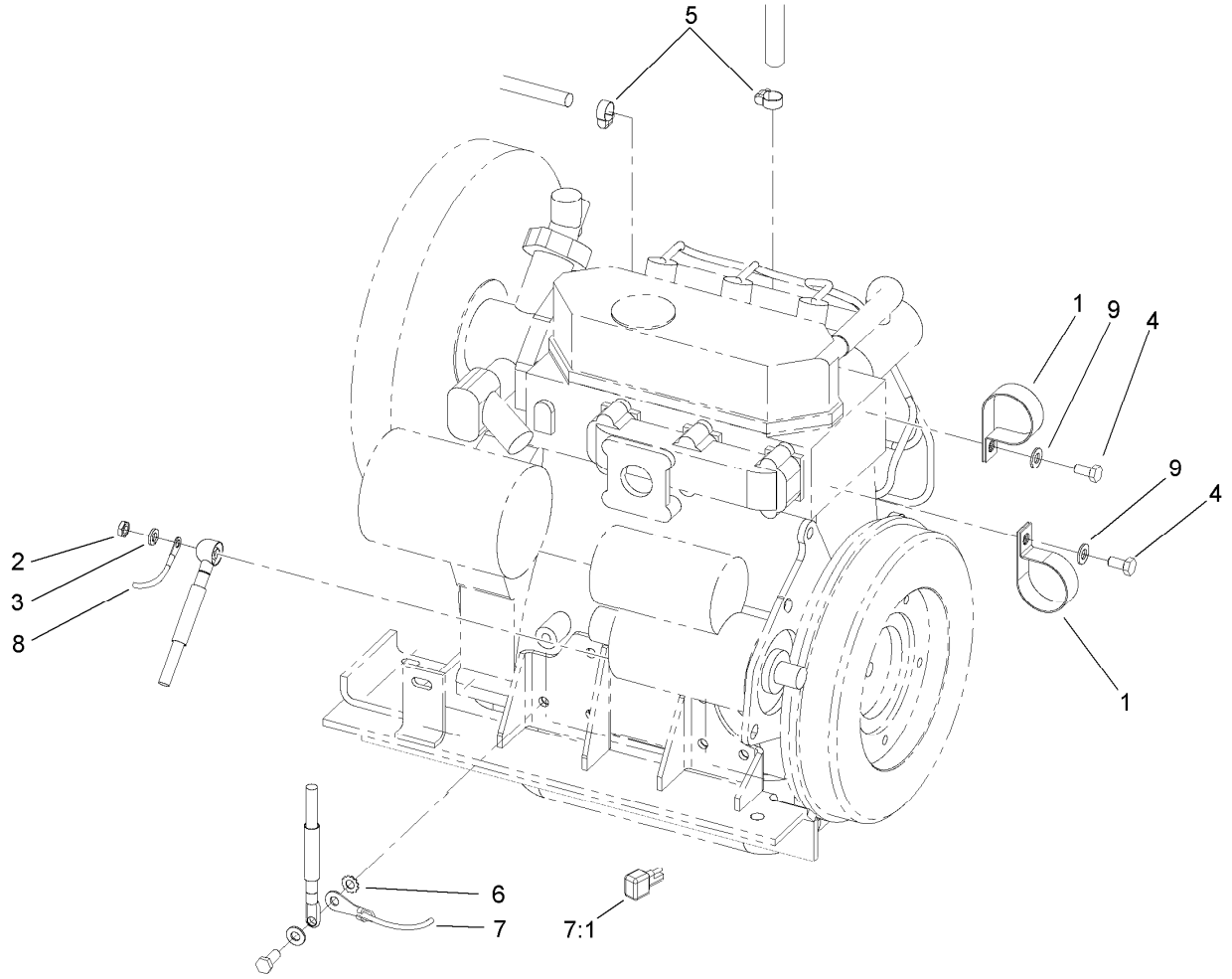

Engine Installation Assembly

Ref.	Part Number	Qty.	Description
1	2412-96	2	Clamp-R
2	57-6390	1	Nut-Jam
3	3253-4	1	Washer-Lock
4	33114-016	2	Screw-HH
5	2412-108	2	Clamp-Worm
6	3255-8	1	Washer-Lock
7	104-3986	1	Harness-Wire, Engine
7:1	100-4918	1	Diode
8	99-3441	1	Harness-Wire, Fusible Link
9	3256-23	2	Washer-Flat

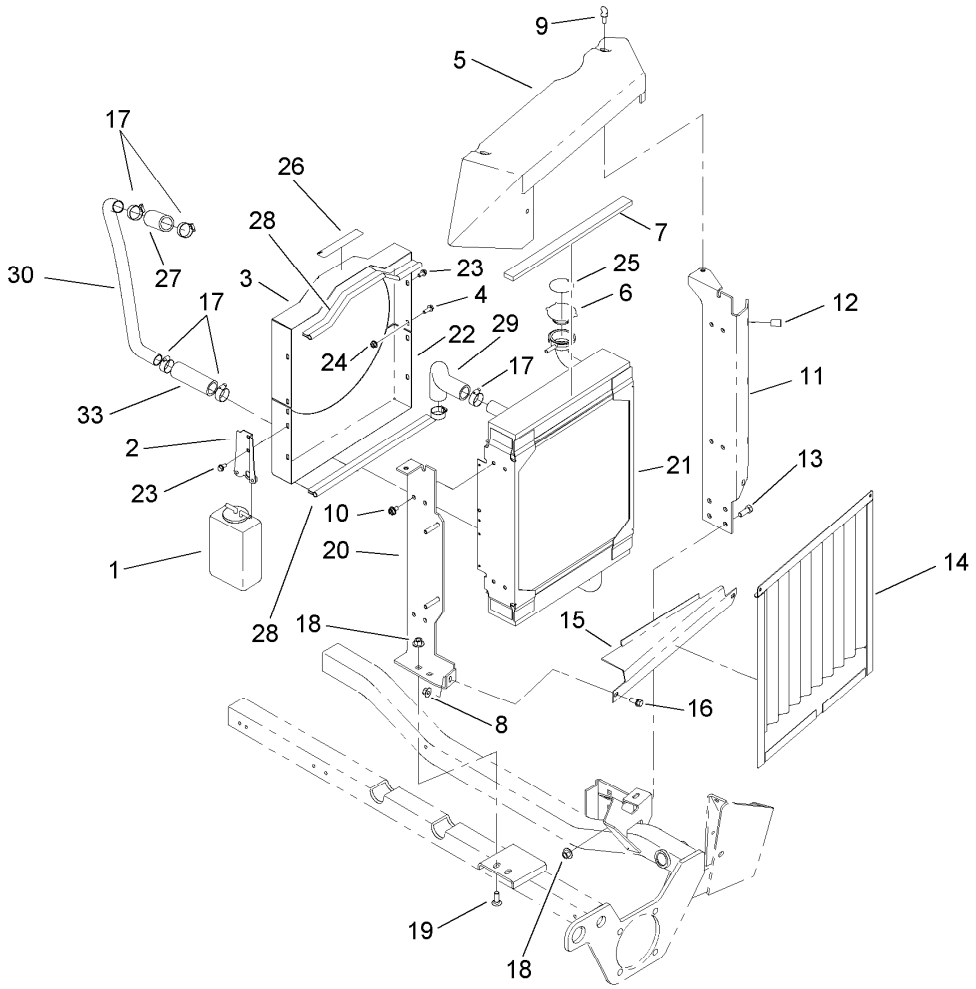

Radiator Assembly

Ref.	Part Number	Qty.	Description
1	104-3930	1	Tank-Radiator, Surge
2	104-3931	1	Mounting-Tank, Surge
3	104-3944-03	1	Shroud-Radiator, Top
4	3234-4	2	Screw-HHF
5	83-8040	1	Cover-Left
6	66-3240	1	Cap-Radiator
7	83-9030	1	Foam-Top
8	32128-44	2	Nut
9	104-4000	2	Screw-Thumb
10	3234-28	8	Screw-HHF
11	104-4006-03	1	Rear Radiator Bracket ASM
12	32148-8	3	Insert-Threaded
13	323-6	4	Screw-HH
14	83-8150-03	1	Screen ASM
15	83-8070-03	1	Shield-Radiator, Bottom
16	3234-5	2	Screw-HHF

Ref.	Part Number	Qty.	Description
17	2412-34	6	Clamp-Hose
18	32128-43	6	Nut-Flange
19	3231-22	2	Screw-CARR
20	104-4008-03	1	Front Radiator Bracket ASM
21	104-3861	1	Radiator ASM
22	104-3945-03	1	Shroud-Radiator, Bottom
23	32104-116	7	Screw
24	32128-33	2	Nut-HF
25	106-5976	1	Decal-Warning
26	93-7272	1	Decal-Warning
27	104-3912	1	Hose-Radiator
28	104-4029	2	Seal-Bulb
29	104-3911	1	Hose-Radiator, Top
30	104-3914-03	1	Tube-Radiator
33	104-4068	1	Hose-Radiator

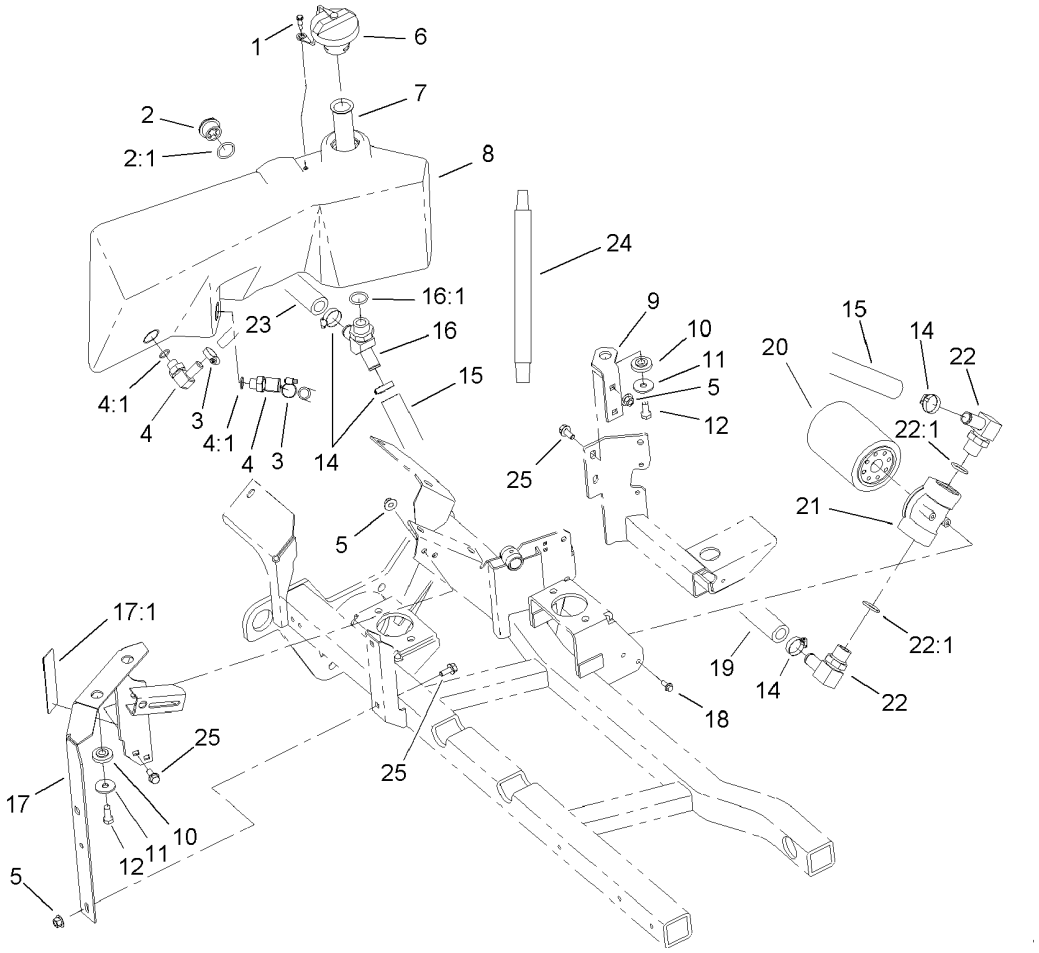

Hydraulic Tank and Filter Assembly

Ref.	Part Number	Qty.	Description
1	57-5420	1	Screw-Shoulder
2	69-1170	1	Glass-Sight
2:1	237-81	1	O-Ring
3	2412-36	2	Clamp-Hose
4	106-8108	2	Fitting-HYD, 90 DEG
4:1	237-65	1	O-Ring
5	32128-44	5	Nut
6	93-7160	1	Cap-Oil, HYD
7	61-2790	1	Filter-Screen
8	106-8110	1	Tank-HYD
9	83-9920	1	Bracket-Tank, HYD
10	240-11	3	Bushing-Flange
11	63-8410	3	Washer
12	323-5	3	Screw-HH
14	2412-34	4	Clamp-Hose

Ref.	Part Number	Qty.	Description
15	104-4089	1	Hose-Suction
16	93-6794	1	Fitting-45 DEG
16:1	237-81	1	O-Ring
17	104-3980	1	U-Bracket ASM
17:1	67-5360	1	Decal-Danger
18	3234-33	2	Screw-HHF
19	104-4011	1	Hose-Suction
20	54-0110	1	Filter-Oil, Transmission
21	68-8990	1	Filter Head ASM
22	353-987	2	Fitting-HYD, 90
22:1	237-81	1	O-Ring
23	93-6857	1	Hose-Suction
24	88-9220	1	Plug-Reservior
25	3234-5	5	Screw-HHF

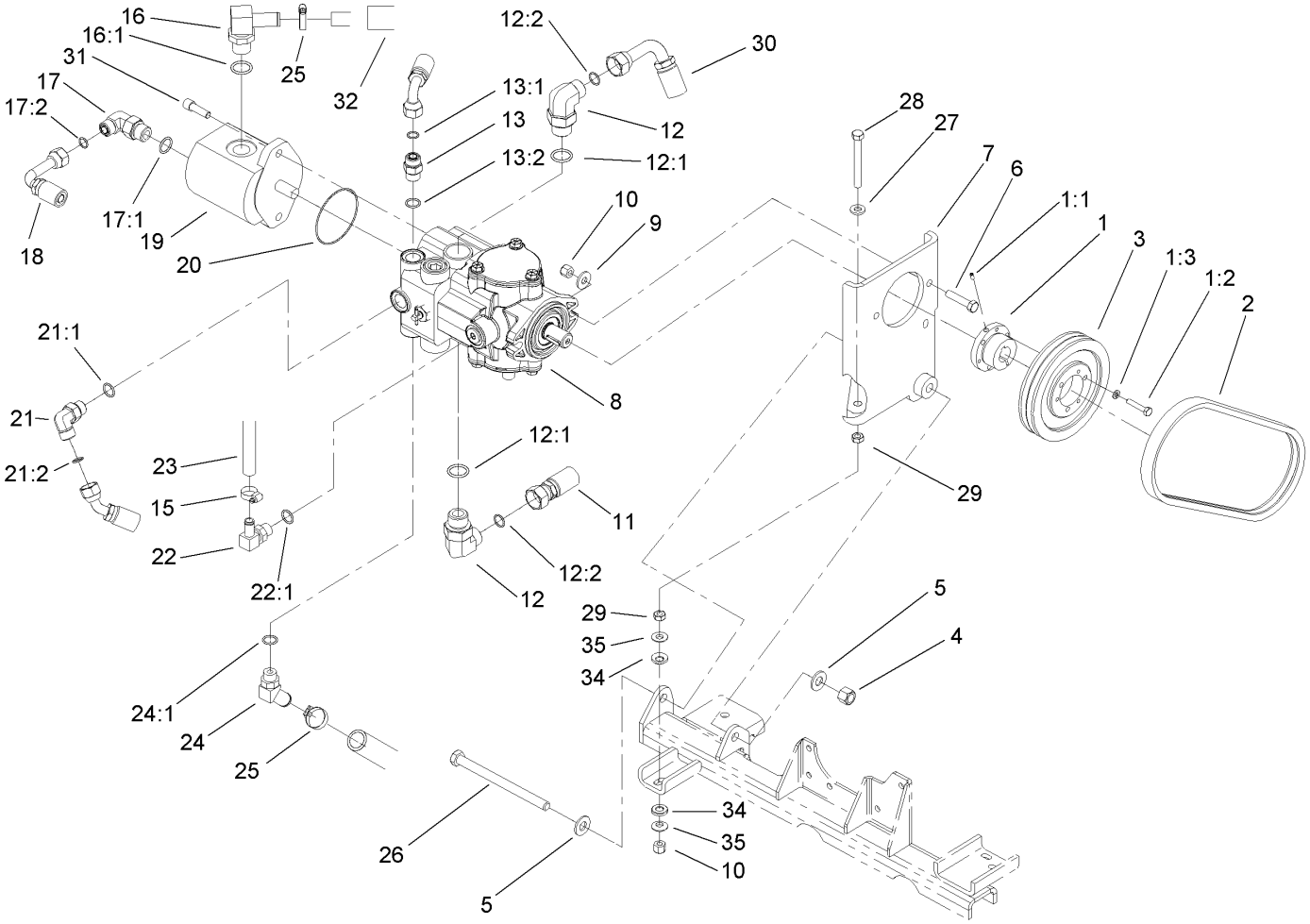

Hydraulic Pump Assembly

Ref.	Part Number	Qty.	Description
1	93-6842	1	Bushing-Lock, Taper
1:1	3245-36	1	Screw-Set, HSH
1:2	321-13	3	Screw-HH
1:3	3253-2	3	Washer-Lock
2	93-6840	1	V-Belt
3	93-6841	1	Pulley
4	3296-23	1	Nut-Lock, NI
5	87-7270	2	Washer-Thrust
6	323-9	2	Screw-HH
7	104-3898-03	1	Pump Support ASM
8	104-3874	1	HYD Piston Pump ASM
9	80-6990	2	Washer-Hardened
10	3296-39	3	Nut-Lock, NI
11	104-3999	1	Hose ASM
12	340-139	2	Fitting-HYD, 90 DEG
12:1	237-81	1	O-Ring
12:2	237-65	1	O-Ring
13	340-4	1	Fitting-HYD, Straight
13:1	237-30	1	O-Ring
13:2	237-79	1	O-Ring
15	2412-36	1	Clamp-Hose
16	353-987	1	Fitting-HYD, 90
16:1	237-81	1	O-Ring
17	340-105	1	Fitting-HYD, 90 DEG

Ref.	Part Number	Qty.	Description
17:1	237-80	1	O-Ring
17:2	237-30	1	O-Ring
18	104-4003	1	Hose ASM
19	106-8130	1	Gear Pump ASM
20	353-949	1	O-Ring
21	340-98	1	Fitting-HYD, 90 DEG
21:1	237-79	1	O-Ring
21:2	237-30	1	O-Ring
22	93-6795	1	Fitting-90 DEG
22:1	237-79	1	O-Ring
23	104-4059	1	Hose-Return
24	93-6848	1	Fitting-HYD
24:1	237-79	1	O-Ring
25	2412-34	2	Clamp-Hose
26	325-33	1	Screw-HH
27	100-4852	1	Washer-Hardened
28	323-49	1	Bolt-TAP
29	3217-7	2	Nut-Hex
30	104-3998	1	Hose ASM
31	3274-7	2	Screw-HSH
32	94-3688	1	Sleeve-Protective
34	104-4067	2	Washer
35	104-4066	2	Washer

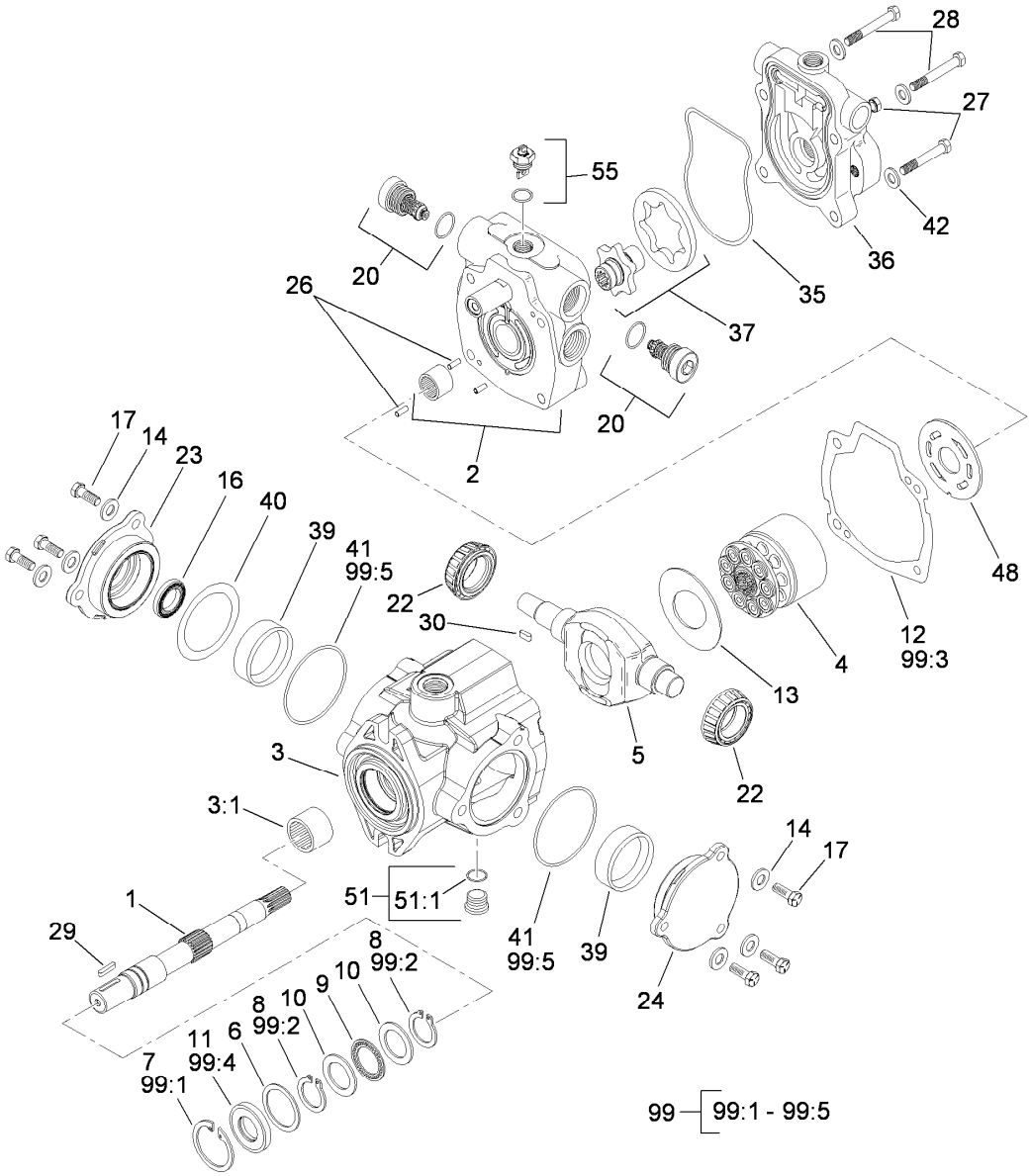

Hydraulic Pump Assembly No. 104-3874

Ref.	Part Number	Qty.	Description
1	94-3642	1	Shaft-Drive
2	104-4047	1	Endcover ASM
3	100-3176	1	Housing ASM
3:1	94-6363	1	Bearing
4	76-6070	1	Rotating Kit
5	100-3175	1	Camplate
6	33-3720	1	Washer
7	32151-13	1	Ring-Retaining
8	32151-29	2	Ring-Retaining
9	252-66	1	Bearing-Thrust
10	252-71	2	Washer-Thrust
11	104-4861	1	Seal-Shaft
12	33-4930	1	Gasket-Housing
13	98-4635	1	Insert-Plate, Cam
14	105-9762	6	Washer
16	76-6190	1	Seal-Shaft
17	98-4640	6	Screw-Cap
20	105-3812	2	Valve-Check
22	98-4639	2	Bearing-Cone

Ref.	Part Number	Qty.	Description
23	98-4645	1	Plate-Cover
24	98-4644	1	Plate-Cover
26	76-6150	2	Pin-Dowel
27	104-4042	2	Screw-Cap
28	104-4043	2	Screw-Cap
29	94-3645	1	Key
30	94-3646	1	Key
35	104-4044	1	O-Ring
36	104-4045	1	Charge Pump Adapter ASM
37	94-3648	1	Gerotor And Coupler ASM
39	104-4046	2	Bearing-Cup
40	100-3182	2	Shim Kit
41	100-3179	2	O-Ring
42	104-4048	4	Washer
48	104-4049	1	Plate-Valve
51	74-9280	1	Plug ASM
51:1		1	O-Ring ●
55	105-3811	1	Valve-Bypass
99	104-4868	1	Seal Repair Kit

● Not serviced separately

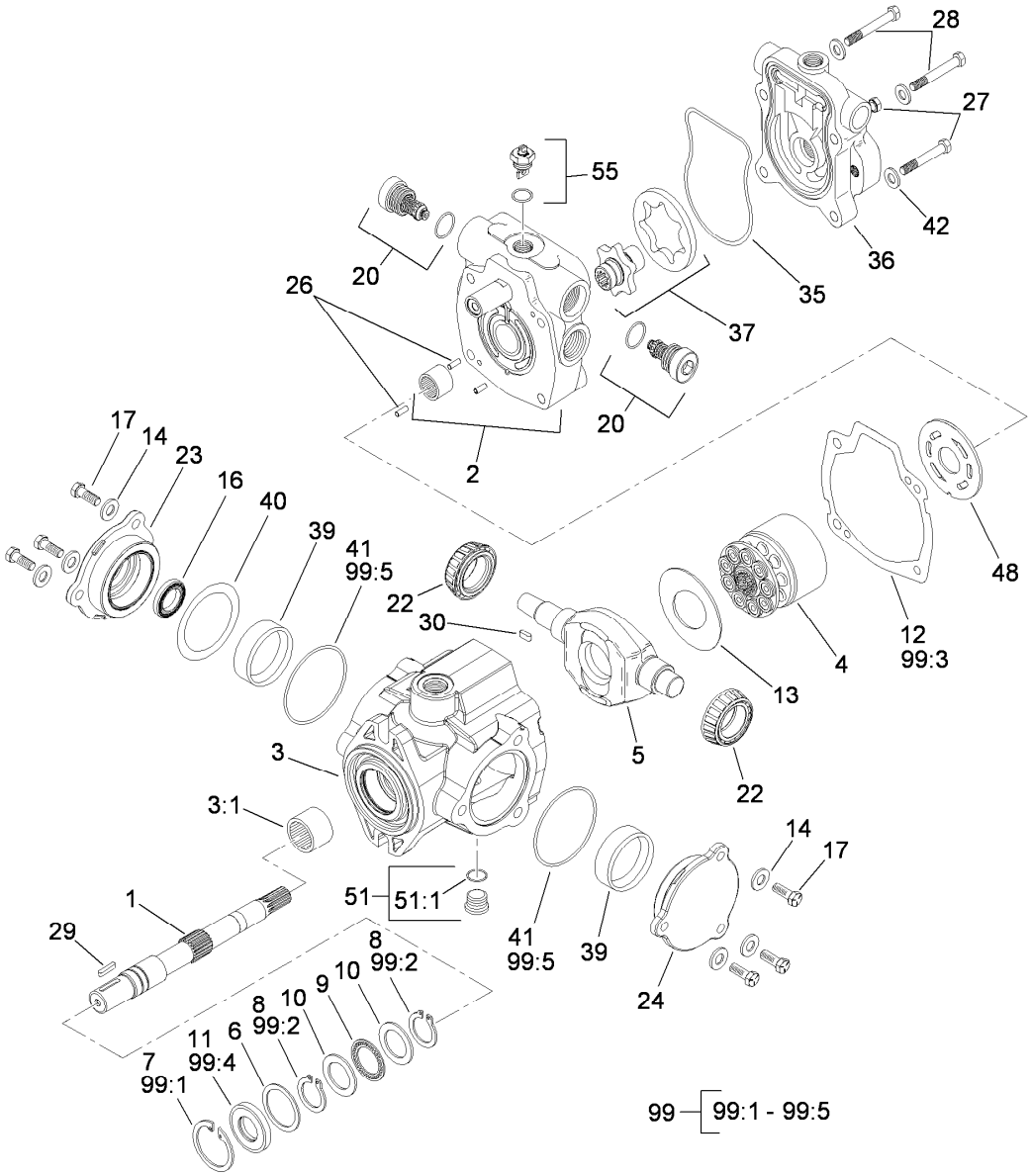

Hydraulic Pump Assembly No. 104-3874 (continued)

Ref.	Part Number	Qty.	Description
99:1	32151-13	1	Ring-Retaining
99:2	32151-29	1	Ring-Retaining
99:3	33-4930	1	Gasket-Housing
99:4	104-4861	1	Seal-Shaft
99:5	100-3179	1	O-Ring

● Not serviced separately

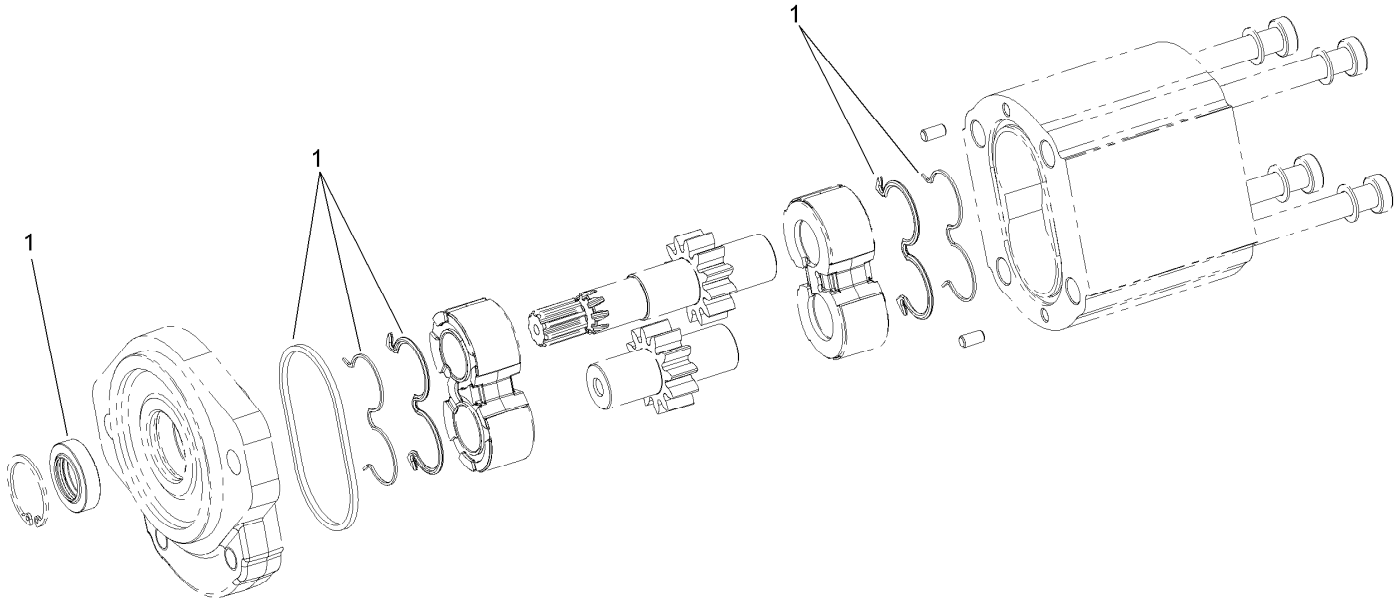

Gear Pump Assembly No. 106-8130

Ref.	*Part Number*	*Qty.*	*Description*
1	106-8135	1	Seal Kit

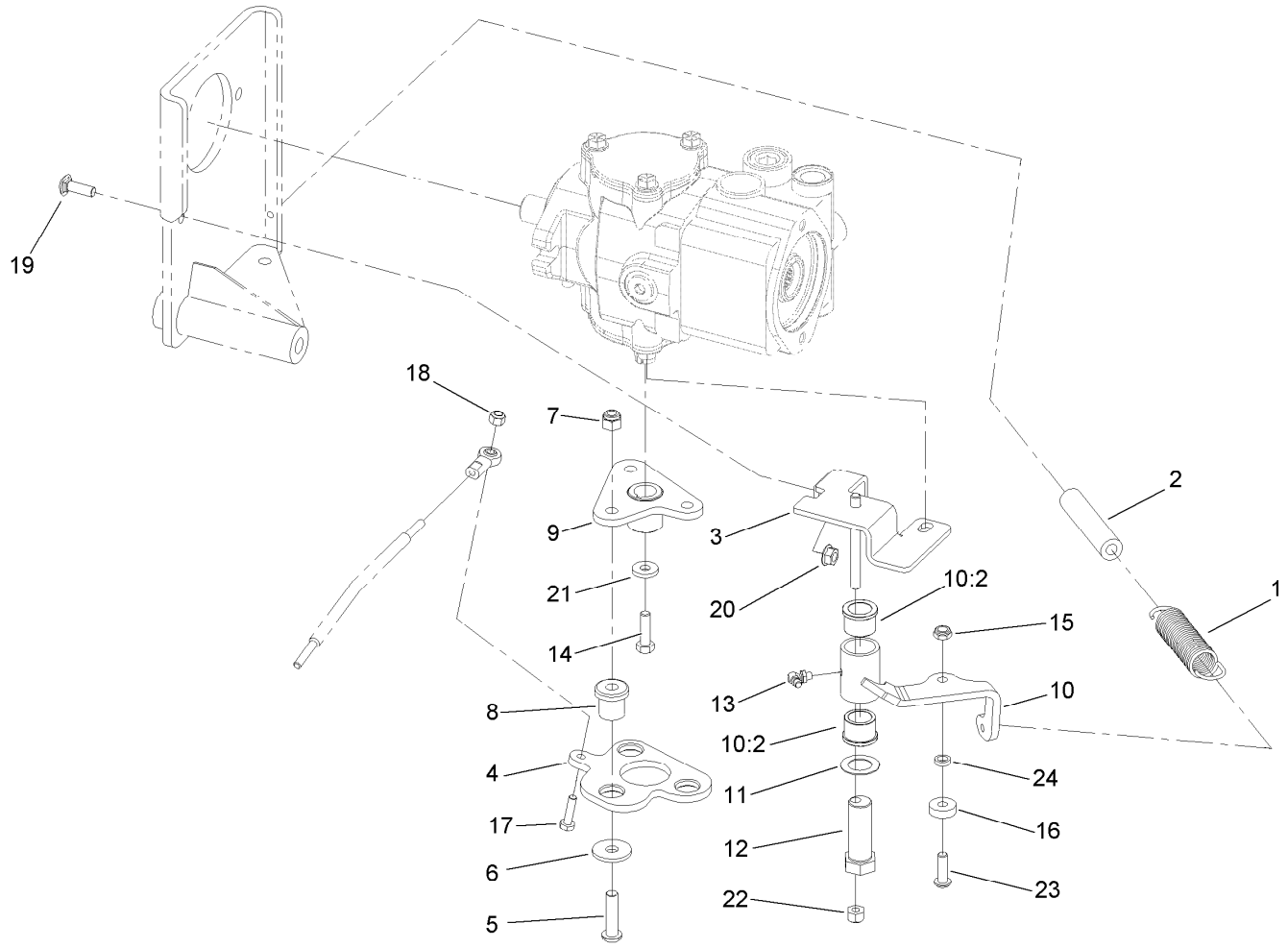

Pump Mount Assembly

Ref.	Part Number	Qty.	Description
1	94-1369	1	Spring-Extension
2	99-3556	1	Hose
3	104-3918-03	1	Bracket ASM
4	104-3917-03	1	Lever-Pump
5	95-3857	3	Screw-HSBH
6	2844	3	Washer
7	3296-39	3	Nut-Lock, NI
8	63-9750	3	Mount
9	99-3598-03	1	Hub ASM
10	104-0422	1	Neutral Arm ASM
10:2	256-113	2	Bushing-Flange
11	3-6498	1	Washer-Thrust
12	76-8640	1	Stud-Traction

Ref.	Part Number	Qty.	Description
13	302-60	1	Fitting-Grease
14	3210-6	1	Screw-HH
15	3296-47	1	Nut-Lock, NI
16	251-259	1	Bearing-Ball
17	321-6	1	Screw-HH
18	3296-42	1	Nut-Lock, NI
19	3230-22	1	Screw-CARR
20	32128-20	1	Nut-HF
21	88-7200	1	Washer-Flat
22	3296-29	1	Nut-Lock, NI
23	3274-104	1	Screw-HSBH
24	100-4817	1	Spacer-Bearing

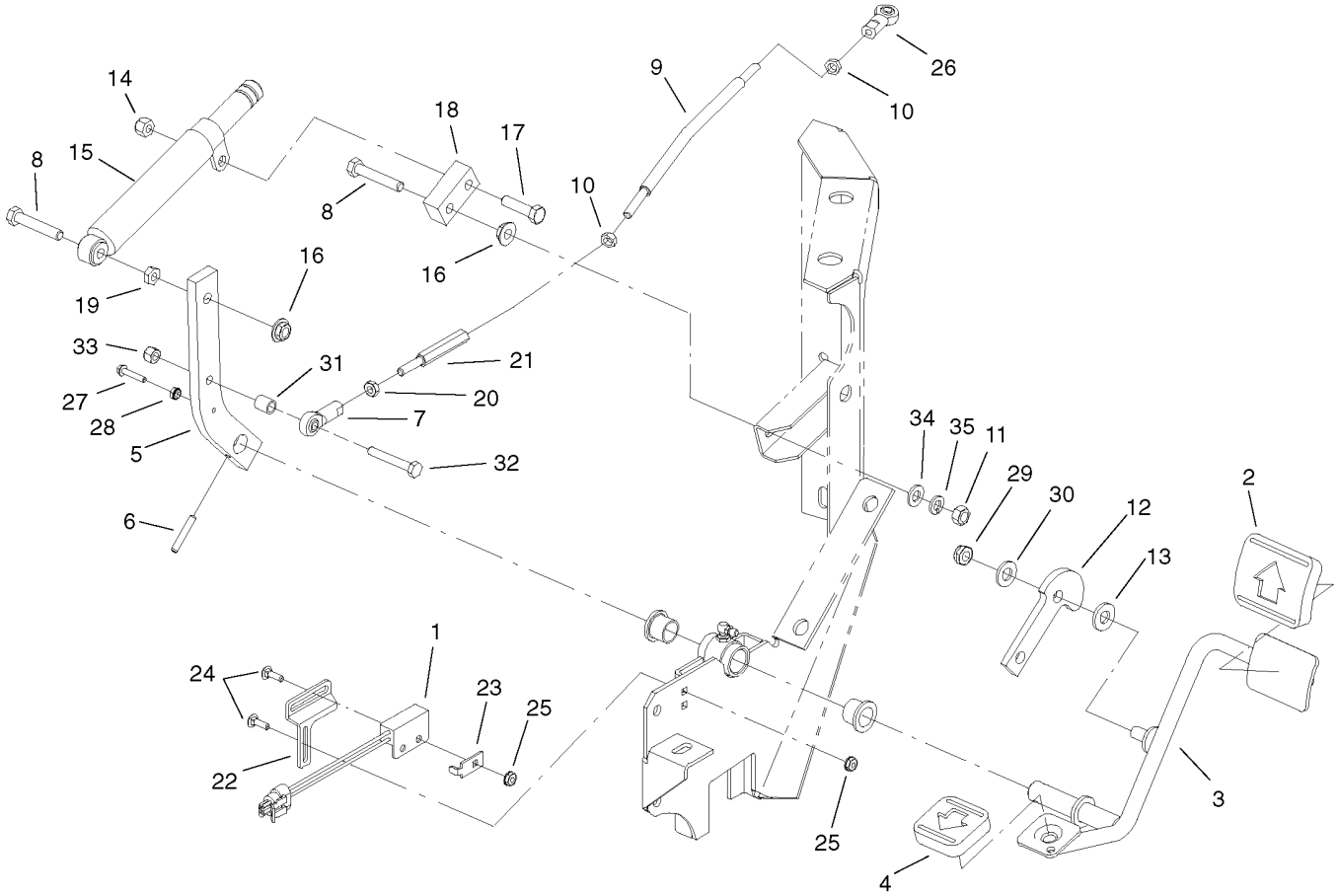

Traction Control Assembly

Ref.	Part Number	Qty.	Description
1	105-0023	1	Switch-Proximity
2	74-9100	1	Pad-Pedal, Forward
3	104-3938-03	1	Traction Pedal ASM
4	74-9110	1	Pad-Pedal, Reverse
5	104-3939	1	Arm-Traction
6	32121-6	1	Pin-Roll, Slotted
7	104-4013	1	Joint-Ball, LH
8	322-9	2	Screw-HH
9	104-3977	1	Rod-Control, Pump
10	3220-1	2	Nut-Jam
11	3217-6	1	Nut-Hex
12	74-6110	1	Stop-Traction
13	66-2920	1	Washer-Friction
14	3296-29	1	Nut-Lock, NI
15	76-8870	1	Lever Damper ASM
16	32128-44	2	Nut
17	322-6	1	Screw-HH
18	76-9760	1	Damper-Pivot

Ref.	Part Number	Qty.	Description
19	3218-2	1	Nut-Jam
20	104-3941	1	Nut-Jam
21	104-3978	1	Nut-Rod
22	104-3979	1	Bracket-Switch
23	100-4872	1	Plate-Switch, Neutral
24	3229-34	3	Screw-CARR
25	32149-7	3	Nut-Keps
26	2411-41	1	Rod End-Ball Joint
27	32105-29	1	Screw-SHWH
28	32149-9	1	Nut-Hex,Keps
29	3296-59	1	Nut-Lock, NI
30	3256-24	1	Washer-Flat
31	93-6859	1	Spacer
32	321-10	1	Screw-HH
33	3296-42	1	Nut-Lock, NI
34	3256-23	1	Washer-Flat
35	3253-4	1	Washer-Lock

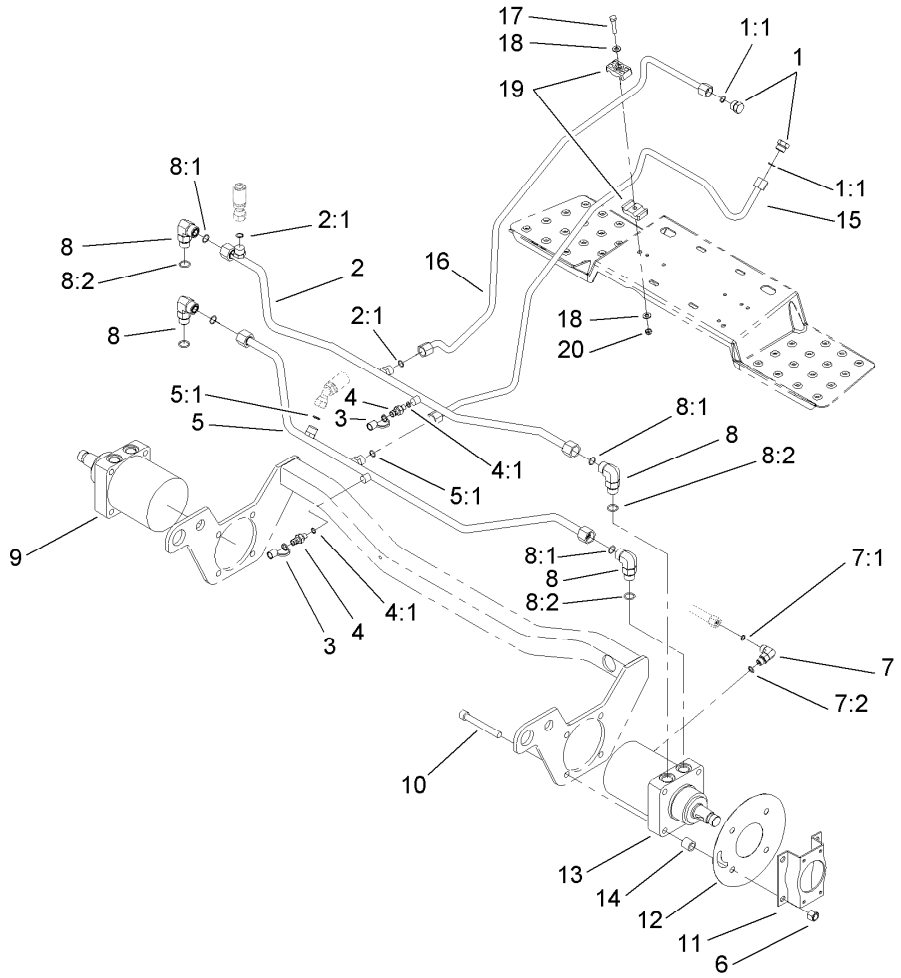

Hydraulic Motor Installation Assembly

Ref.	Part Number	Qty.	Description
1	106-8100	2	Plug-HYD
1:1	237-79	1	O-Ring
2	104-3984	1	Front Tube ASM
2:1	237-30	2	O-Ring
3	354-79	2	Cap-Dust
4	354-77	2	Fitting-Quick
4:1	237-78	1	O-Ring
5	104-3983	1	Rear Tube ASM
5:1	237-30	2	O-Ring
6	3296-23	8	Nut-Lock, NI
7	340-77	1	Fitting-HYD, 90 DEG
7:1	237-22	1	O-Ring
7:2	237-42	1	O-Ring
8	340-17	4	Fitting-HYD, 90 DEG

Ref.	Part Number	Qty.	Description
8:1	237-65	1	O-Ring
8:2	237-80	1	O-Ring
9	75-9990	1	HYD Motor ASM
10	3274-99	8	Screw-HSH
11	84-2000-03	2	Bracket-Brake
12	93-6905-03	2	Shield-Wheel
13	93-6888	1	HYD Motor ASM
14	94-5135	8	Spacer
15	106-8112	1	Tube-HYD
16	106-8113	1	Tube-HYD
17	322-10	1	Screw-HH
18	3256-23	2	Washer-Flat
19	56-7976	2	Clamp-Tube
20	3296-29	1	Nut-Lock, NI

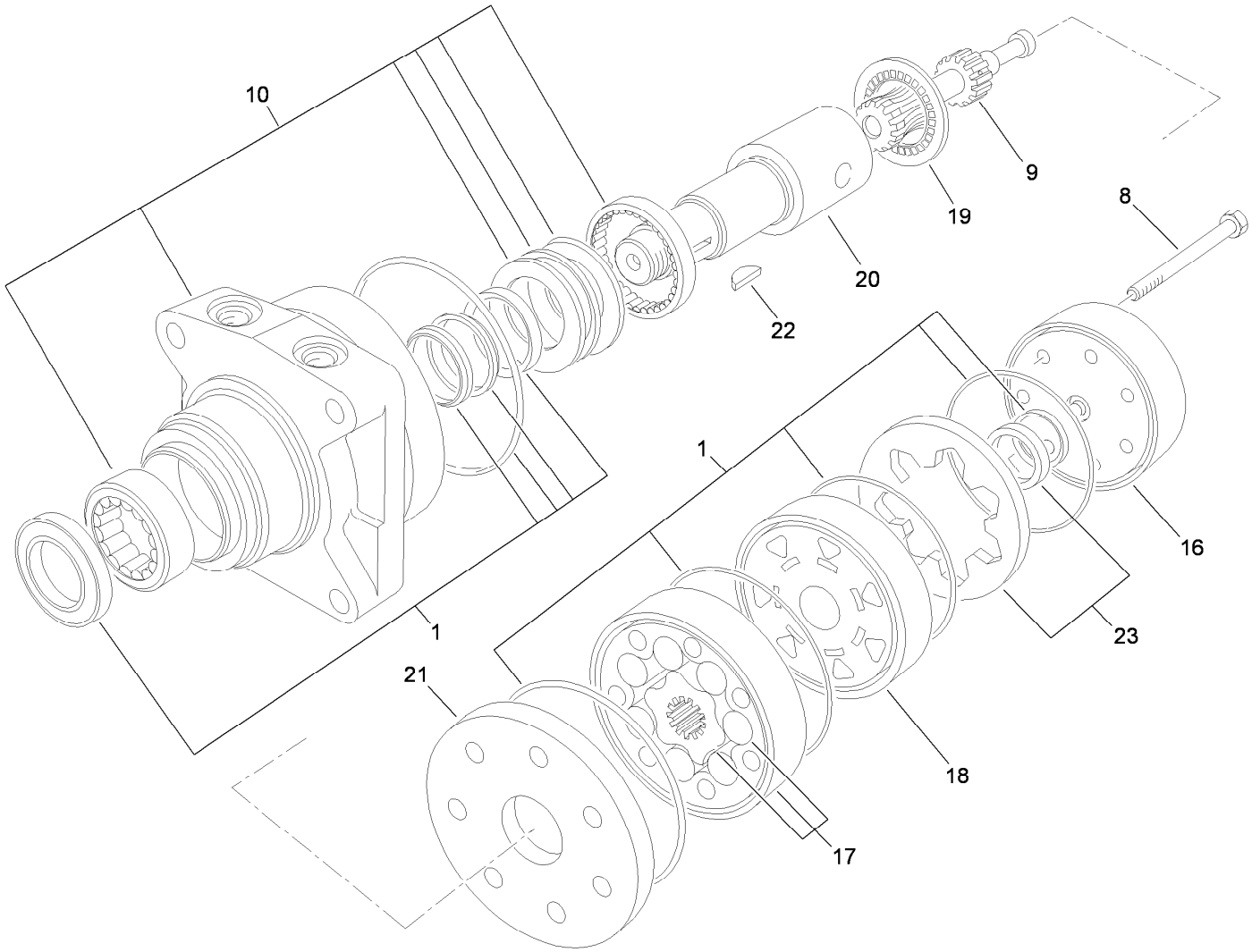

Hydraulic Motor Assembly No. 75-9990

Ref.	*Part Number*	*Qty.*	*Description*
1	76-0800	1	Seal Kit
8	76-1010	7	Screw
9	76-0960	1	Link-Drive
10	76-0810	1	Housing ASM
16	76-0940	1	End Cover ASM
17	76-0970	1	Rotor Set
18	76-0840	1	Manifold
19	76-0850	1	Bearing-Thrust
20	76-0860	1	Shaft-Coupling
21	76-0870	1	Plate-Wear
22	3257-42	1	Key-Woodruff
23	76-0880	1	Commutator ASM

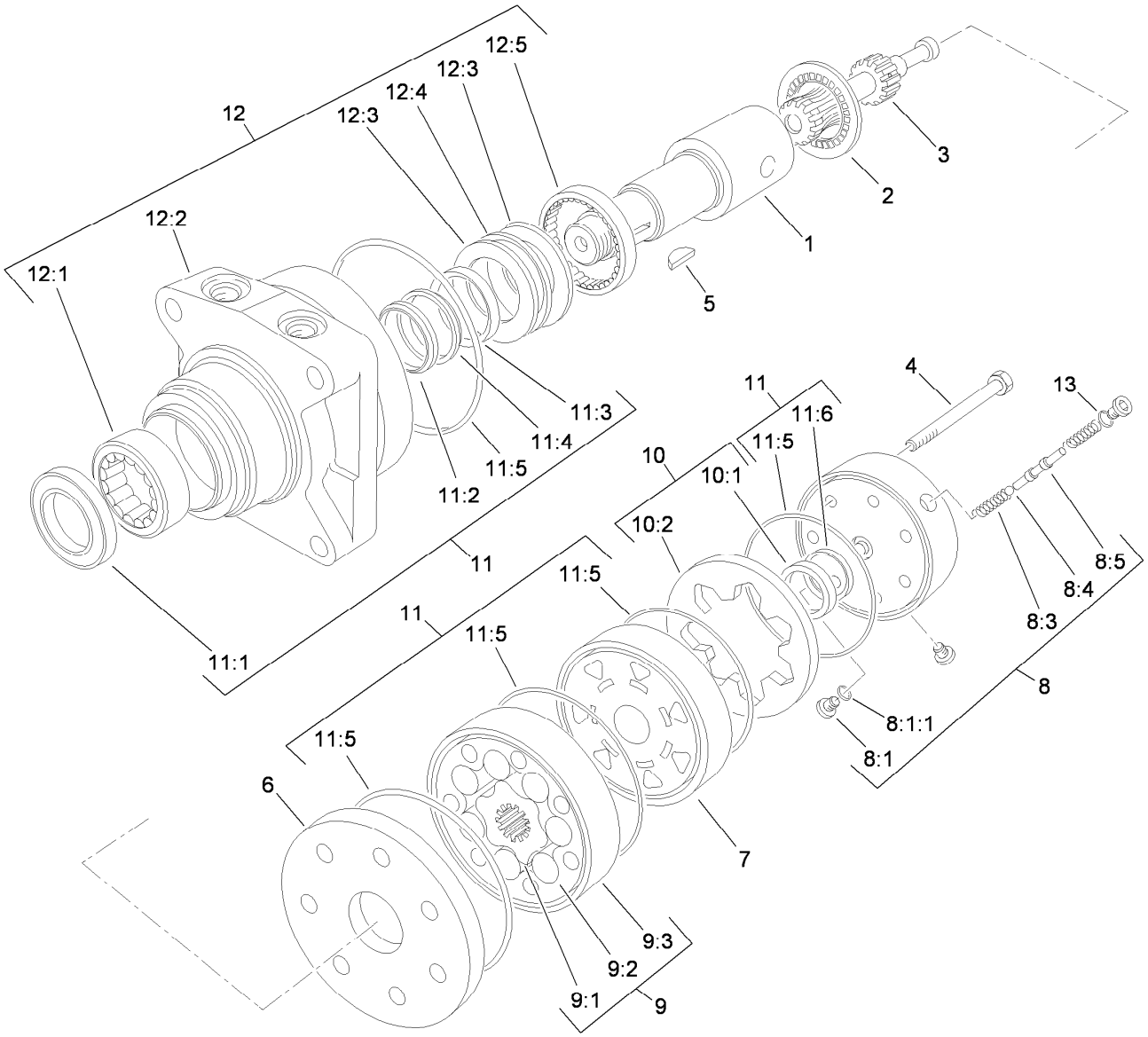

Hydraulic Motor Assembly No. 93-6888

Ref.	Part Number	Qty.	Description
1	76-0860	1	Shaft-Coupling
2	76-0850	1	Bearing-Thrust
3	76-0960	1	Link-Drive
4	94-3662	7	Screw-Cap, HH
5	3257-42	1	Key-Woodruff
6	76-0870	2	Plate-Wear
7	76-0840	1	Manifold
8	76-0890	1	End Cover ASM
8:1	353-990	2	Plug
8:1:1	237-78	1	O-Ring
8:3		2	Spring ●
8:4		1	Ball ●
8:5		1	Valve-Shuttle ●
9	76-0970	1	Rotor Set
9:1		1	Rotor ●
9:2		7	Vane ●
9:3		1	Stator ●

Ref.	Part Number	Qty.	Description
10	76-0880	1	Commutator ASM
10:1		1	Commutator ●
10:2		1	Ring-Commutator ●
11	94-8178	1	Seal Kit
11:1		1	Seal-Dirt And Water ●
11:2		1	Backup-Ring ●
11:3		1	Seal-Shaft ●
11:4		1	Washer-Backup ●
11:5		5	Seal-Square, Ring (Inner) ●
11:6		1	Seal-Commutator ●
12	76-0810	1	Housing ASM
12:1		1	Bearing ●
12:2		1	Housing ●
12:3		2	Washer-Thrust ●
12:4		1	Bearing-Thrust ●
12:5		1	Bearing ●
13	237-78	2	O-Ring

● Not serviced separately

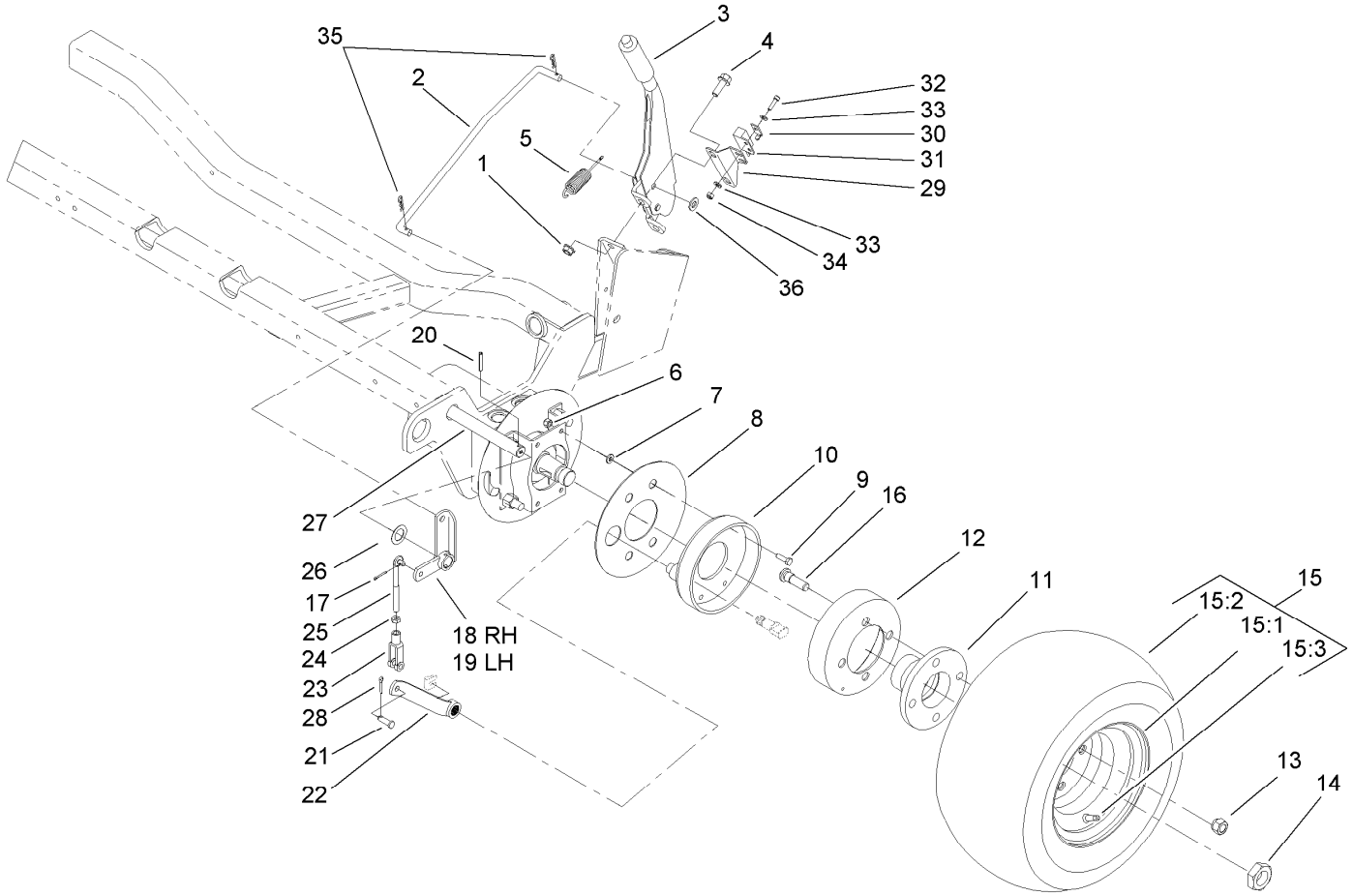

Front Wheel and Brake Assembly

Ref.	Part Number	Qty.	Description
1	3290-357	2	Nut-HHF, Whiz
2	104-3907	1	Rod-Brake
3	104-3903	1	Lever-Brake, Parking
4	3234-11	2	Screw-HHF
5	104-4010	1	Spring-Extension
6	3296-42	8	Nut-Lock, NI
7	3256-16	8	Washer-Flat
8	83-9340	2	Shield-Brake, Grass
9	321-5	8	Screw-HH
10	104-7705	2	Brake ASM
11	93-6838-03	2	Hub-Wheel
12	10-6850	2	Drum-Brake
13	242-50	8	Nut-Lug
14	26-3790	2	Nut-Lock
15		2	Front Tire And Wheel ASM ●
15:1	93-6881	1	Rim ASM
15:2	99-4506	1	Tire
15:3	232-27	1	Stem-Valve
16	85-6540	8	Stud-Drive
17	3272-6	2	Pin-Cotter
18	83-9310	1	RH Brake Lever ASM
19	104-3928	1	LH Brake Lever ASM
20	32121-6	2	Pin-Roll, Slotted
21	283-1	2	Pin-Clevis
22	114-2726	2	Lever-Brake
23	282-2	2	Yoke
24	3220-2	2	Nut-Jam
25	84-1990	2	Rod-Adjusting
26	3-6498	2	Washer-Thrust
27	83-9330	1	Shaft-Brake
28	3272-10	2	Pin-Cotter
29	104-4052-03	1	Bracket-Switch, Brake
30	100-4872	1	Plate-Switch, Neutral
31	100-1270	1	Switch-Proximity
32	3274-14	1	Screw-HSH
33	3256-14	2	Washer-Flat
34	3296-2	1	Nut-Lock, NI
35	3290-307	2	Pin-Hair
36	3256-24	3	Washer-Flat

● Not serviced separately

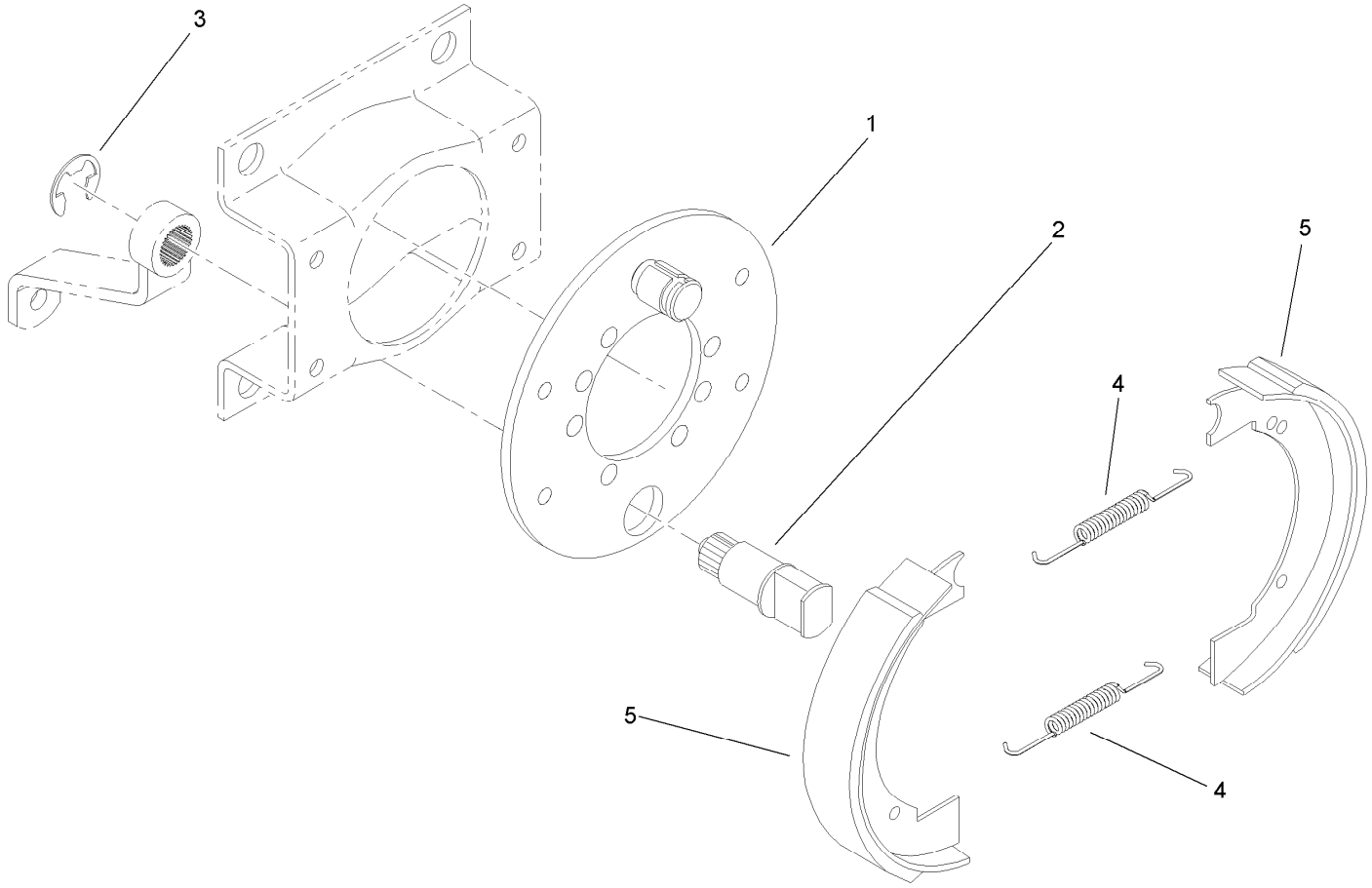

Brake Assembly No. 104-7705

Ref.	*Part Number*	*Qty.*	*Description*
1	70-9870	1	Plate-Backing
2	104-7707	1	Shaft-Cam, Brake
3	104-7706	1	E-Ring, Bowed
4	70-9880	2	Spring-Return
5	70-9840	2	Shoe-Brake

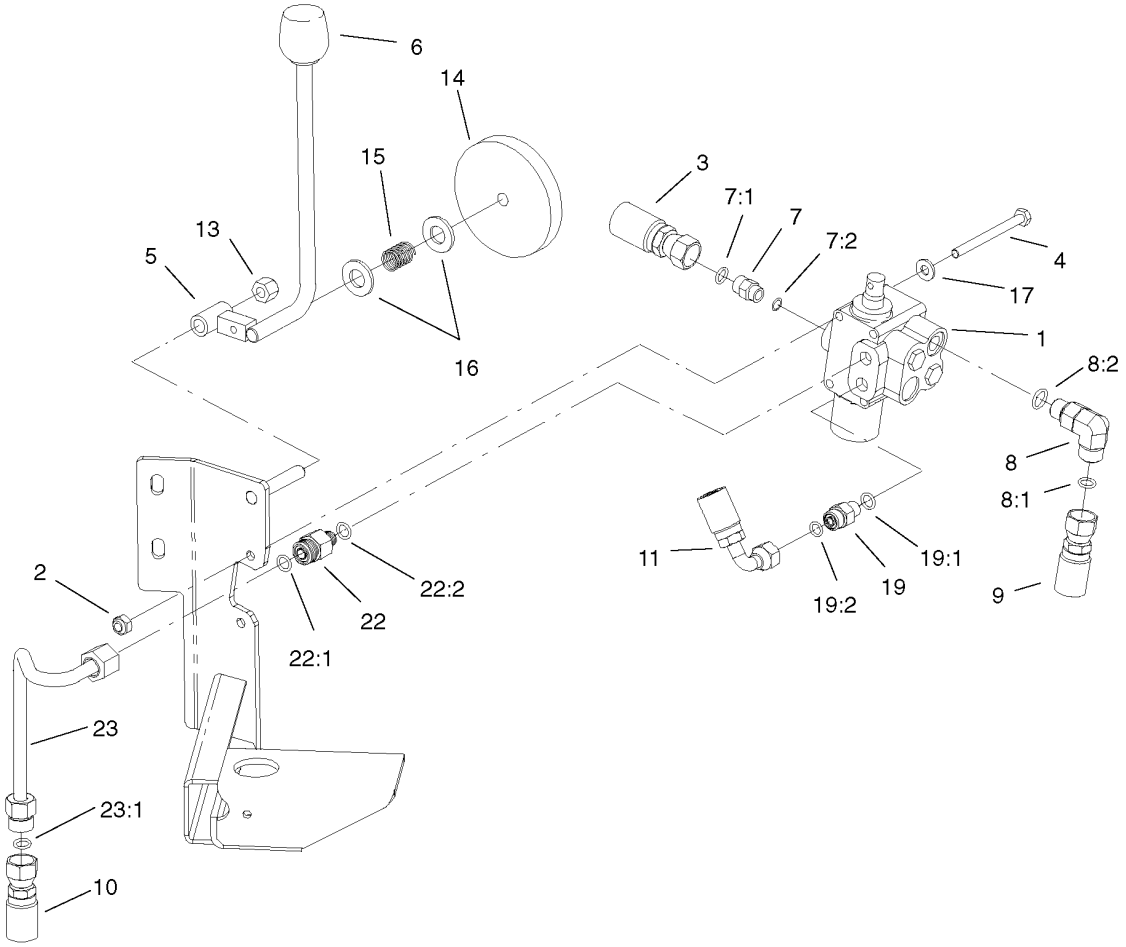

Hydraulic Valve Installation Assembly

Ref.	Part Number	Qty.	Description
1	104-4092	1	HYD Control Valve ASM
2	3296-16	2	Nut-Lock, NI
3	104-5163	1	Hose ASM
4	321-23	2	Screw-HH
5	85-5160-03	1	Lever-Valve ASM
6	233-37	1	Knob
7	340-2	1	Fitting-HYD, Straight
7:1	237-22	1	O-Ring
7:2	237-42	1	O-Ring
8	340-77	1	Fitting-HYD, 90 DEG
8:1	237-22	1	O-Ring
8:2	237-42	1	O-Ring
9	104-5162	1	Hose ASM
10	104-4001	1	Hose ASM

Ref.	Part Number	Qty.	Description
11	104-4083	1	Hose ASM
13	3296-39	1	Nut-Lock, NI
14	94-5119	1	Sponge
15	65-9940	1	Spring
16	3256-26	2	Washer-Flat
17	3256-22	2	Washer-Flat
19	340-92	1	Fitting-HYD, Straight
19:1	237-78	1	O-Ring
19:2	237-21	1	O-Ring
22	340-88	1	Adapter
22:1	237-22	1	O-Ring
22:2	237-78	1	O-Ring
23	104-4085	1	HYD Tube ASM
23:1	237-22	1	O-Ring

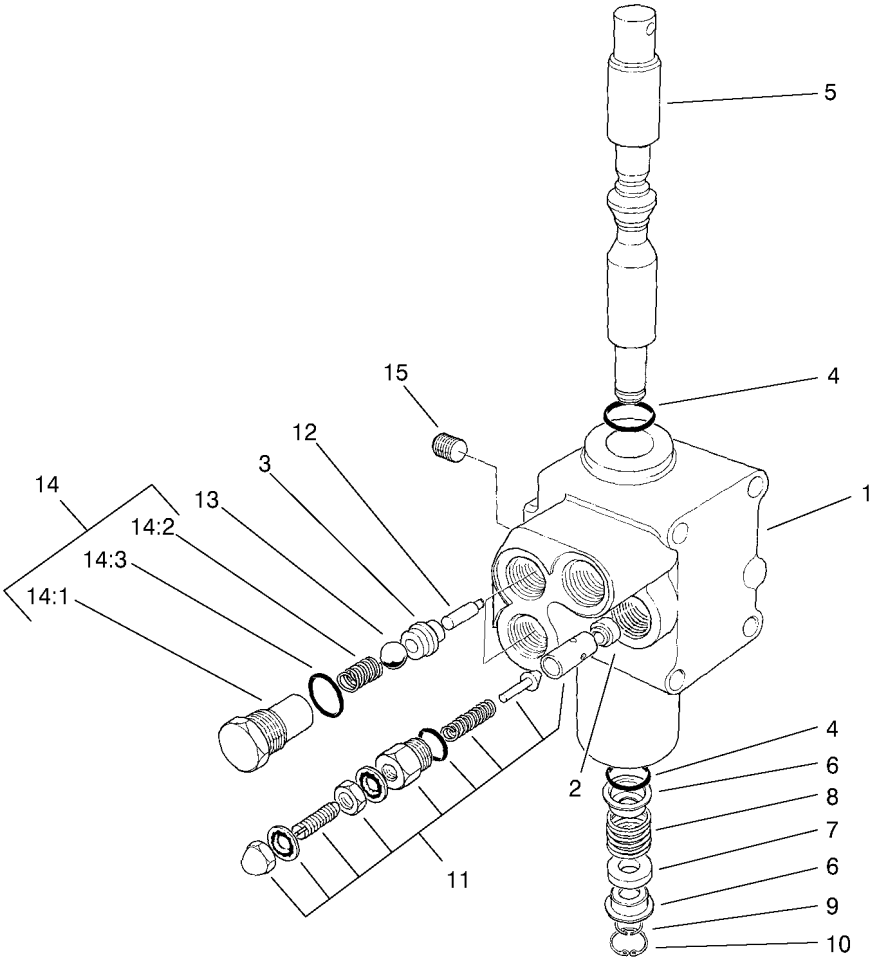

Hydraulic Control Valve No. 104-4092

Ref.	Part Number	Qty.	Description
1		1	Body ●
2	55-3640	1	Seat-Relief
3	22-8370	2	Seat-Valve
4	22-8500	2	O-Ring
5	22-8420	1	Spool
6	22-8380	2	Retainer
7	23-3030	1	Spacer
8	22-8410	1	Spring
9	22-8480	1	Ring-Snap
10	22-8490	1	Ring-Snap
11	22-8440	1	Valve-Relief
12	22-8360	2	Pin
13	22-8350	2	Ball
14	105-7827	2	Plug ASM
14:1	22-8330	1	Plug
14:2	22-8340	1	Spring
14:3	237-42	1	O-Ring
15	55-3650	1	Plug

● Not serviced separately

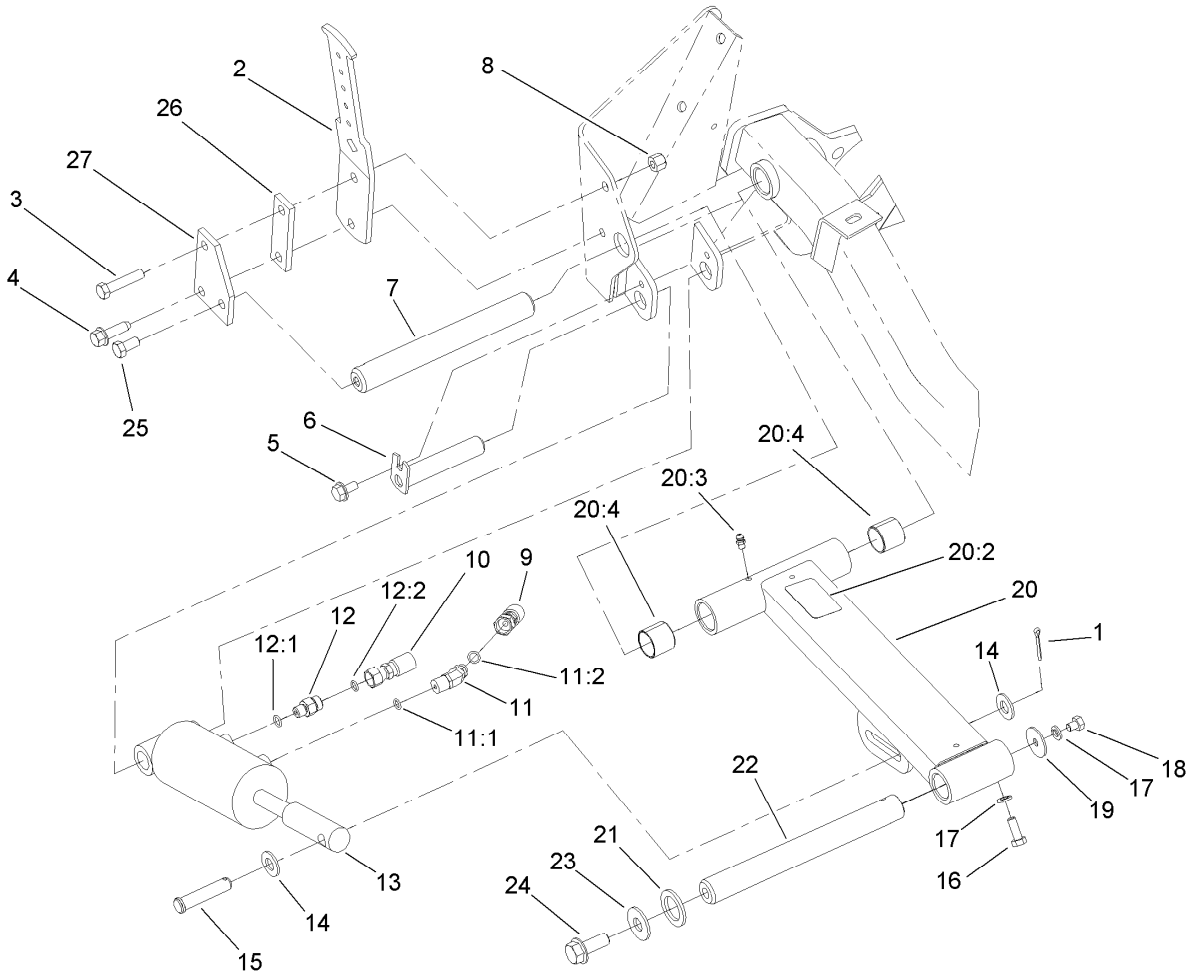

Rear Lift Arm Assembly

Ref.	Part Number	Qty.	Description
1	3272-11	1	Pin-Cotter
2	92-1818-01	1	Arm-Spring, Tension
3	323-9	1	Screw-HH
4	32144-109	1	Screw
5	32144-14	1	Screw-HWHTF
6	93-6893	1	Pin-Pivot, Ram
7	92-1812	1	Shaft-Pivot, Lift
8	3296-39	1	Nut-Lock, NI
9	104-4002	1	Hose ASM
10	94-5008	1	Hose ASM
11	340-103	1	Fitting-HYD, 45 DEG
11:1	237-78	1	O-Ring
11:2	237-21	1	O-Ring
12	340-92	1	Fitting-HYD, Straight
12:1	237-78	1	O-Ring
12:2	237-21	1	O-Ring
13	93-6869	1	HYD Cylinder ASM

Ref.	Part Number	Qty.	Description
14	3256-26	2	Washer-Flat
15	93-6926	1	Pin-Clevis
16	322-4	1	Screw-HH
17	3253-4	2	Washer-Lock
18	322-26	1	Screw-HH
19	3256-57	1	Washer-Flat
20	94-3635	1	Center Lift Arm ASM
20:2	93-6696	1	Decal-Warning
20:3	302-5	1	Fitting-Grease
20:4	3-0348	2	Bushing
21	256-115	1	Washer-Thrust
22	99-2338	1	Shaft-Pivot
23	3256-6	1	Washer-Flat
24	3234-32	1	Screw-HHF
25	323-4	1	Screw-HH
26	98-3445	1	Spacer
27	98-3446	1	Plate-Reinforcement

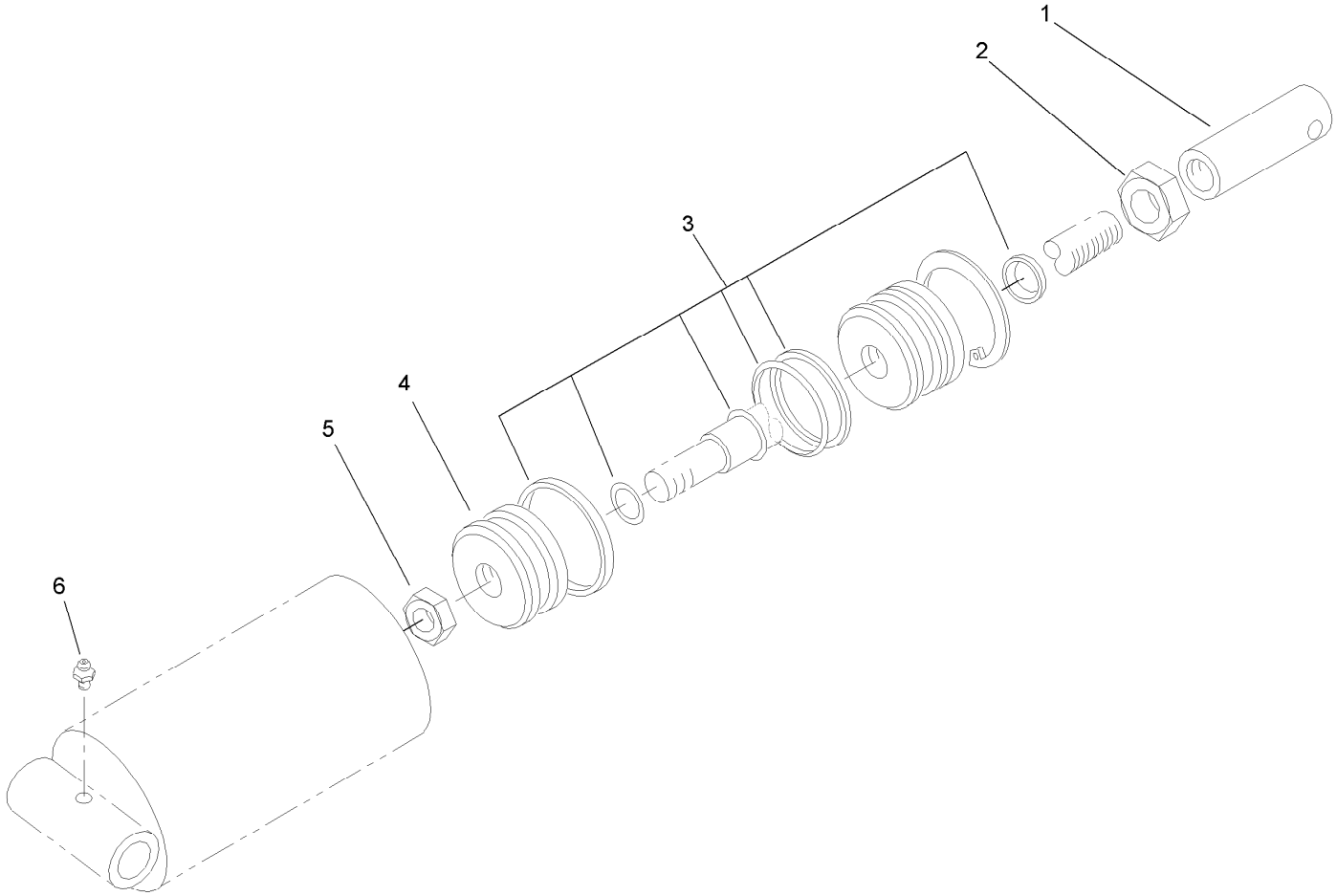

Hydraulic Cylinder Assembly No. 93-6869

Ref.	*Part Number*	*Qty.*	*Description*
1	94-3617	1	Clevis-Cylinder
2	32152-10	1	Locknut
3	94-3619	1	Seal Kit
4		1	Piston ●
5		1	Nut-Lock ●
6	302-58	1	Fitting-Straight

● Not serviced separately

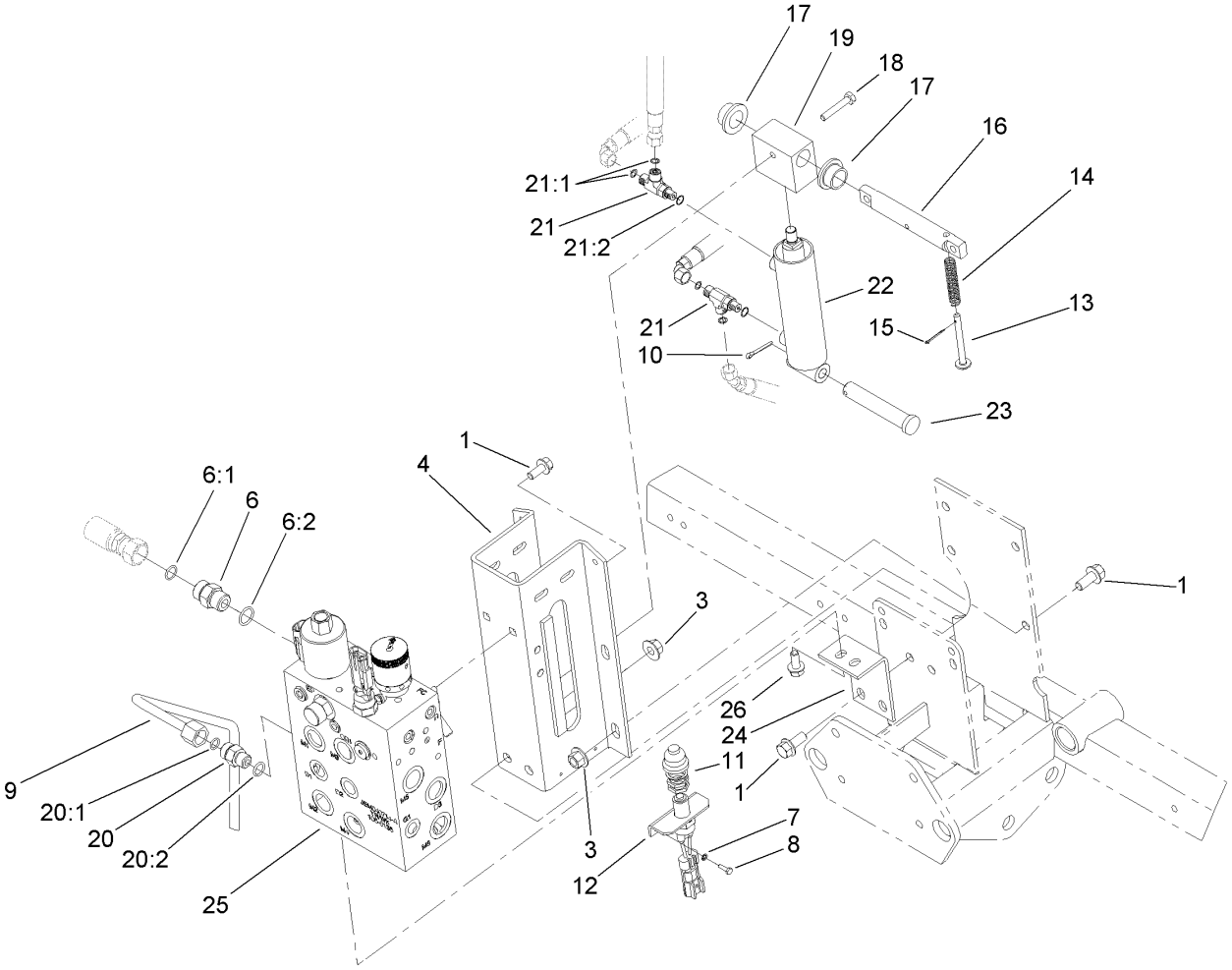

Front Lift Cylinder Assembly

Ref.	Part Number	Qty.	Description
1	3234-25	6	Screw-HHF
3	32128-43	6	Nut-Flange
4	104-3946-03	1	Cylinder Support ASM
6	340-4	1	Fitting-HYD, Straight
6:1	237-30	1	O-Ring
6:2	237-79	1	O-Ring
7	3254-9	2	Washer-Lock, Internal
8	32144-18	2	Screw-HH
9	104-4050	1	HYD Tube ASM
10	3272-11	1	Pin-Cotter
11	94-3429	1	Switch-Ball
12	94-3424	1	Bracket-Mount, Switch
13	94-5010	1	Pin-Actuator, Switch
14	94-5011	1	Spring-Compression
15	3272-4	1	Pin-Cotter

Ref.	Part Number	Qty.	Description
16	72-4190	1	Pin-Guide, Cylinder
17	84-8440	2	Bushing
18	321-43	1	Capscrew
19	61-2450	1	Hub-Lift
20	340-2	1	Fitting-HYD, Straight
20:1	237-22	1	O-Ring
20:2	237-42	1	O-Ring
21	340-86	2	Fitting-Tee
21:1	237-22	2	O-Ring
21:2	237-42	1	O-Ring
22	94-5031	1	Cylinder-Lift, HYD
23	283-78	1	Pin-Clevis
24	93-6733-03	1	Bracket-Mount, Valve
25	106-8149	1	Manifold Block ASM
26	3234-5	3	Screw-HHF

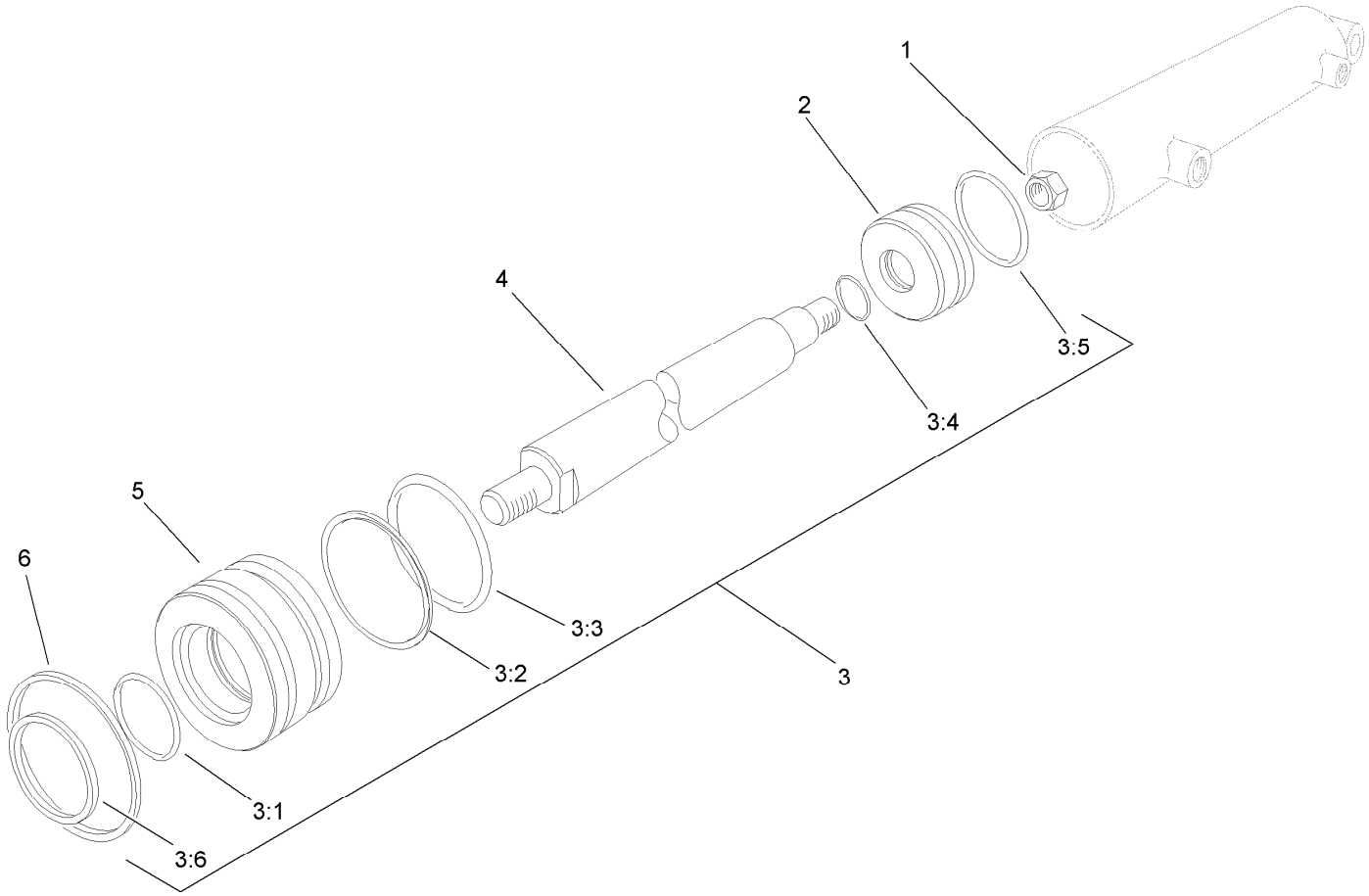

Hydraulic Lift Cylinder Assembly No. 94-5031

Ref.	*Part Number*	*Qty.*	*Description*
1		1	Nut-Lock ●
2		1	Piston ●
3	94-3614	1	Seal Kit
3:1		1	O-Ring ●
3:2		1	Washer-Backup ●
3:3		1	O-Ring ●
3:4		1	O-Ring ●
3:5		1	Uniring ●
3:6		1	Seal-Dust ●
4		1	Shaft ●
5		1	Head ●
6	94-3612	1	Ring-Retaining

● Not serviced separately

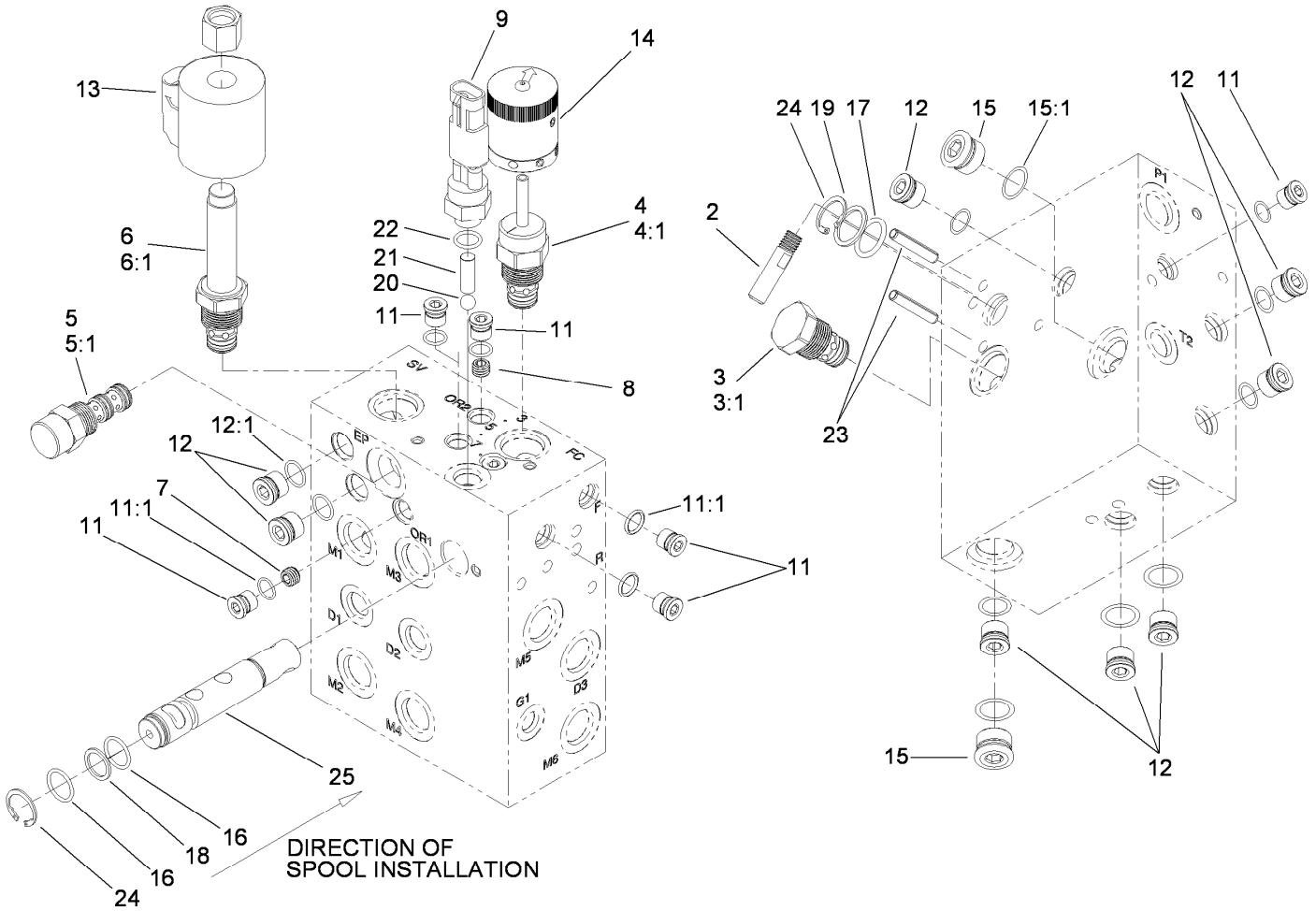

Manifold Block Assembly No. 106-8149

Ref.	Part Number	Qty.	Description
2	110-8758	1	Handle-Spool
3	110-8759	1	Valve-Check
3:1	110-8772	1	Seal Kit
4	110-8769	1	Valve-Control, Manual Flow
4:1	110-2633	1	Seal Kit
5	110-8890	1	Element-Logic
5:1	110-8773	1	Seal Kit
6	110-8768	1	Valve-Relief, Solenoid
6:1	110-6316	1	Seal Kit
7	110-8989	1	Plug-Orifice
8	106-8141	1	Orifice
9	72-4320	1	Switch-Ball
11	106-1025	7	Plug-HYD
11:1	237-78	1	O-Ring
12	106-1026	8	Plug-HYD

Ref.	Part Number	Qty.	Description
12:1	237-42	1	O-Ring
13	110-6344	1	Coil-12V Dc
14	110-8767	1	Rotary Handle ASM
15	106-1027	2	Plug-HYD
15:1	237-79	1	O-Ring
16	112-6535	2	O-Ring
17	106-8140	1	O-Ring
18	112-6534	1	Ring-Back Up
19	106-8139	1	Ring-Back Up
20	110-8762	1	Ball-Chrome
21	106-8138	1	Pin
22	110-8757	1	O-Ring
23	112-6531	2	Pin-Spring
24	112-6532	2	Ring-Retaining
25	117-4602	1	Spool

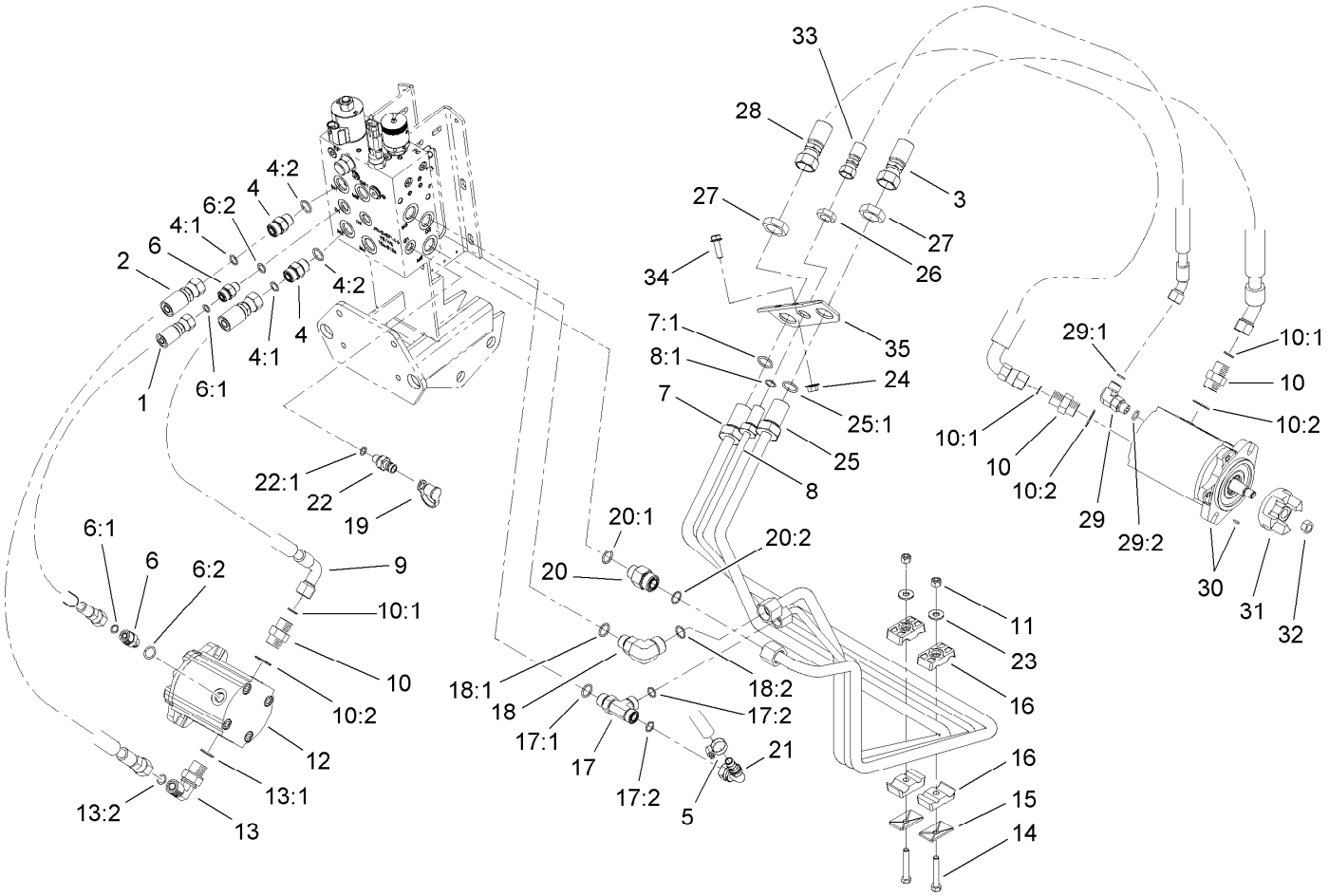

Reel Motor Assembly

Ref.	Part Number	Qty.	Description
1	94-5986	2	Hose ASM
2	94-5987	2	Hose ASM
3	94-5129	1	Hose ASM
4	340-4	4	Fitting-HYD, Straight
4:1	237-30	1	O-Ring
4:2	237-79	1	O-Ring
5	2412-36	1	Clamp-Hose
6	340-2	4	Fitting-HYD, Straight
6:1	237-22	1	O-Ring
6:2	237-42	1	O-Ring
7	104-3950	1	Tube ASM
7:1	237-65	1	O-Ring
8	104-3951	1	Tube ASM
8:1	237-30	1	O-Ring
9	94-5985	2	Hose ASM
10	340-6	4	Fitting-HYD, Straight
10:1	237-30	1	O-Ring
10:2	237-80	1	O-Ring
11	3296-29	2	Nut-Lock, NI
12	115-3413	2	Gear Motor ASM
13	340-105	2	Fitting-HYD, 90 DEG
13:1	237-80	1	O-Ring
13:2	237-30	1	O-Ring
14	322-10	2	Screw-HH
15	69-9760	2	Coverplate
16	56-7970	4	Clamp-Tube
17	340-109	1	Fitting-HYD, Tee
17:1	237-79	1	O-Ring
17:2	237-30	2	O-Ring
18	340-153	1	Fitting-Elbow, 90 DEG
18:1	237-79	1	O-Ring
18:2	237-151	1	O-Ring
19	354-79	1	Cap-Dust
20	340-155	1	Fitting-HYD, Straight
20:1	237-79	1	O-Ring
20:2	237-151	1	O-Ring
21	93-6803	1	Fitting-90 DEG
22	354-77	1	Fitting-Quick
22:1	237-78	1	O-Ring
23	3256-3	2	Washer-Flat
24	32128-44	2	Nut
25	104-3949	1	Tube ASM
25:1	237-65	1	O-Ring
26	340-70	1	Nut-Lock
27	340-74	2	Nut-Lock, Bulkhead
28	105-5401	1	Hose ASM
29	340-77	1	Fitting-HYD, 90 DEG
29:1	237-22	1	O-Ring
29:2	237-42	1	O-Ring
30	115-3414	1	Gear Motor ASM
31	115-3490	3	Coupler-Reel Motor
32	32128-48	3	Nut-Lock, HHF
33	93-6789	1	Hose-HYD
34	3234-17	2	Screw-HHF
35	93-6796-01	1	Bracket-Bulkhead

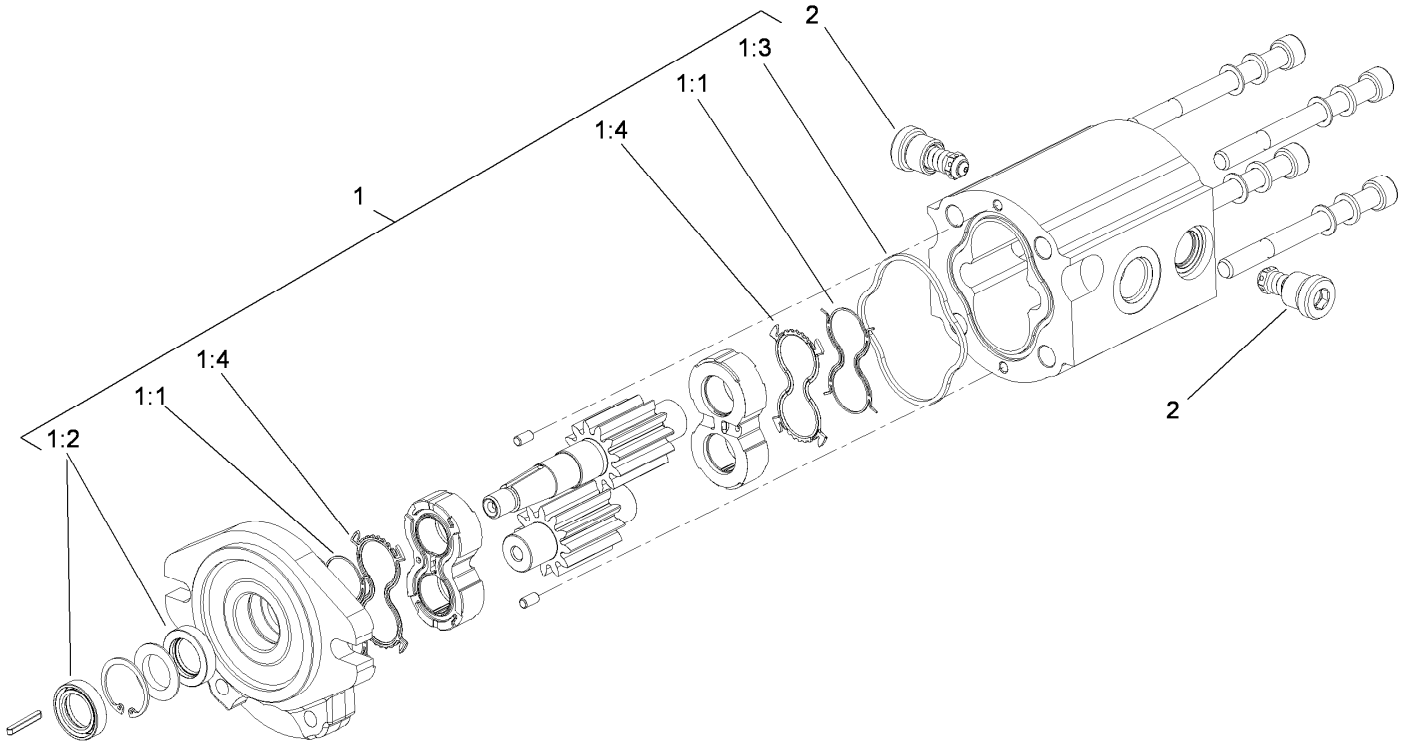

Gear Motor Assembly No. 115-3413

Ref.	*Part Number*	*Qty.*	*Description*
1	117-5105	1	Seal Kit
1:1		2	Seal-Anti Extrusion ●
1:2		2	Seal-Shaft ●
1:3		1	Seal-Quad ●
1:4		2	Seal ●
2	117-5107	2	Valve-Check

● Not serviced separately

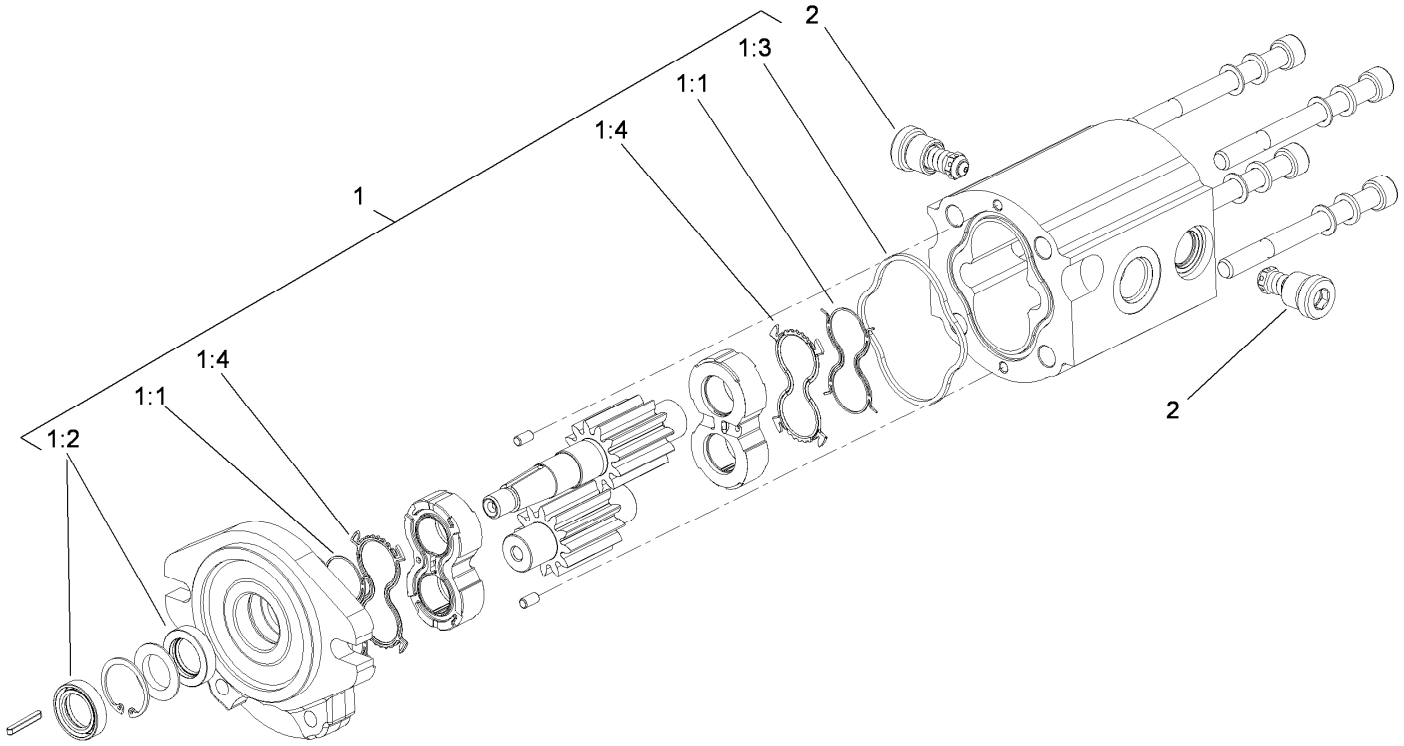

Gear Motor Assembly No. 115-3414

Ref.	*Part Number*	*Qty.*	*Description*
1	117-5106	1	Seal Kit
1:1		2	Seal-Anti Extrusion ●
1:2		2	Seal-Shaft ●
1:3		1	Seal-Quad ●
1:4		2	Seal ●
2	117-5107	2	Valve-Check

● Not serviced separately

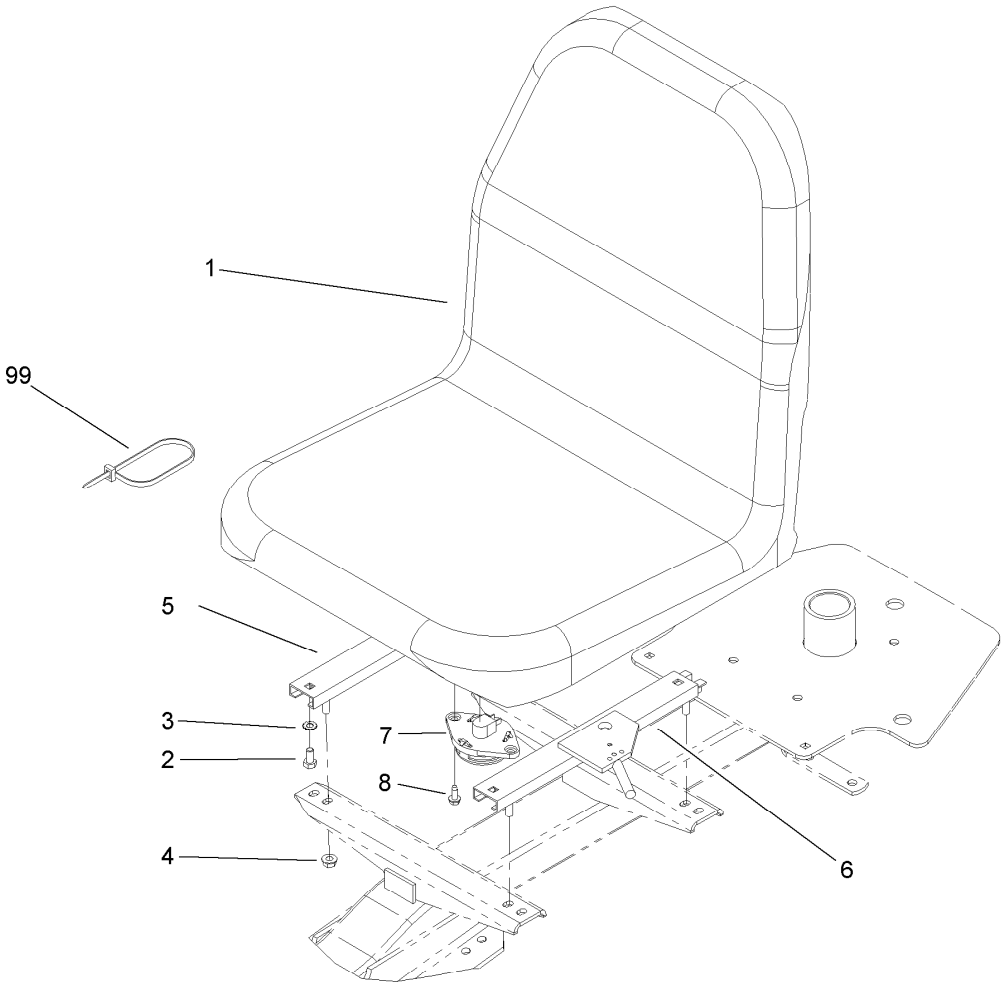

Seat Assembly

Ref.	Part Number	Qty.	Description
1	104-4620	1	Seat
2	322-2	4	Screw-HH
3	3255-8	4	Washer-Lock
4	104-8300	4	Nut-Flange, NI
5	92-8990	1	Adjuster-Slave
6	92-8991	1	Adjuster ASM (W/Latch)
7	92-6282	1	Switch-Seat
8	32144-10	2	Screw-HWH
99	3290-378	1	Tie-Cable

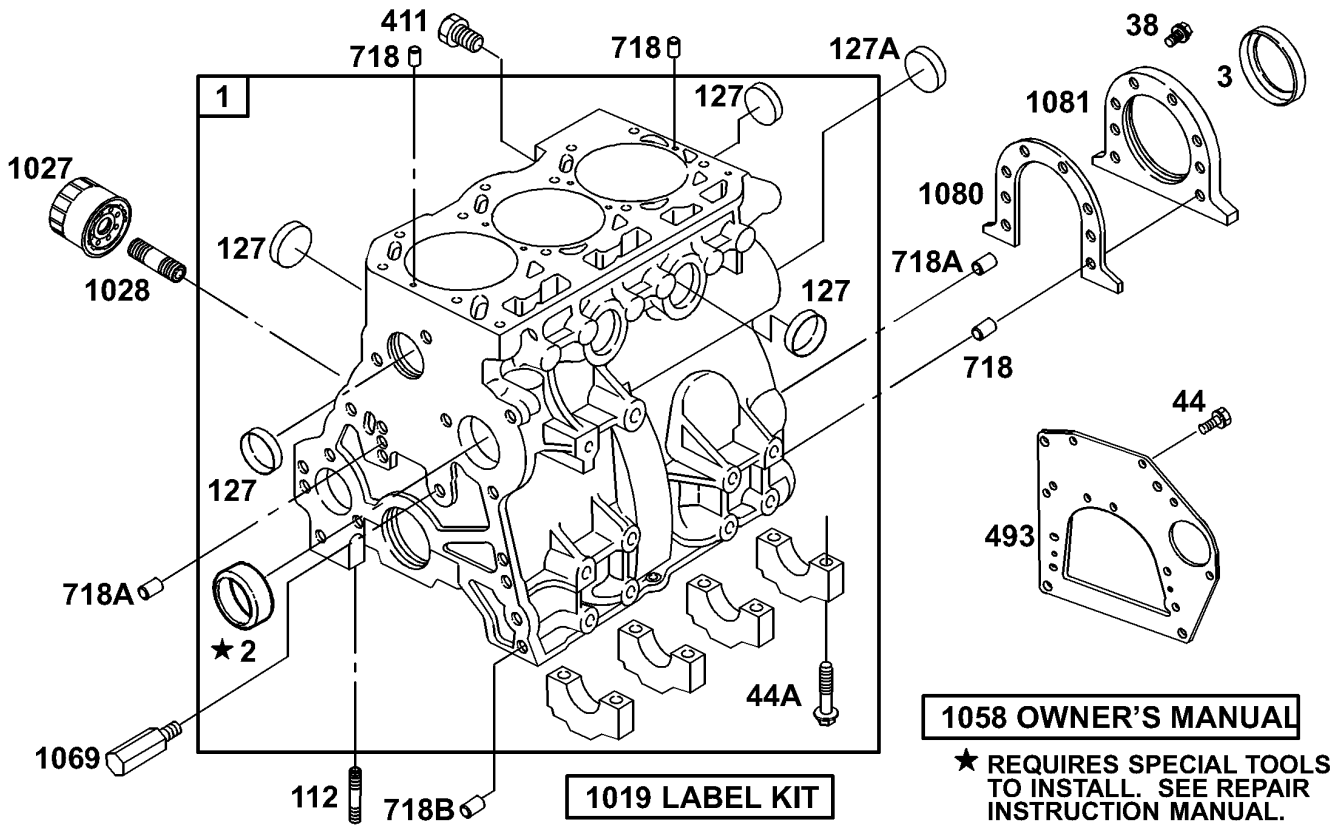

Cylinder Assembly

Ref.	*Part Number*	*Qty.*	*Description*
1	100-6401	1	Cylinder ASM
2	99-9002	1	Bushing
3	99-9003	1	Seal-Oil
38	99-9004	6	Screw-Hex
44	99-9005	3	Screw-Hex
112	99-9007	1	Stud-Metric
127	99-9008	7	Plug-Welch
411	99-9601	1	Plug (Cylinder Block)
44A	99-9006	8	Screw-Hex
493	99-9011	1	Bracket-Mounting
718	99-9012	4	Pin-Locating
1019	99-9015	1	Label Kit
1027	108-3842	1	Filter-Oil
1028	99-9018	1	Adapter-Filter, Oil
1058	99-9602	1	Manual-Owners
1069	99-9020	1	Nozzle-Oil
1080	99-9021	1	Gasket-Retainer
1081	99-9022	1	Retainer-Seal
127A	99-9010	1	Plug-Welch
718A	99-9013	3	Pin-Locating
718B	99-9014	2	Pin-Locating

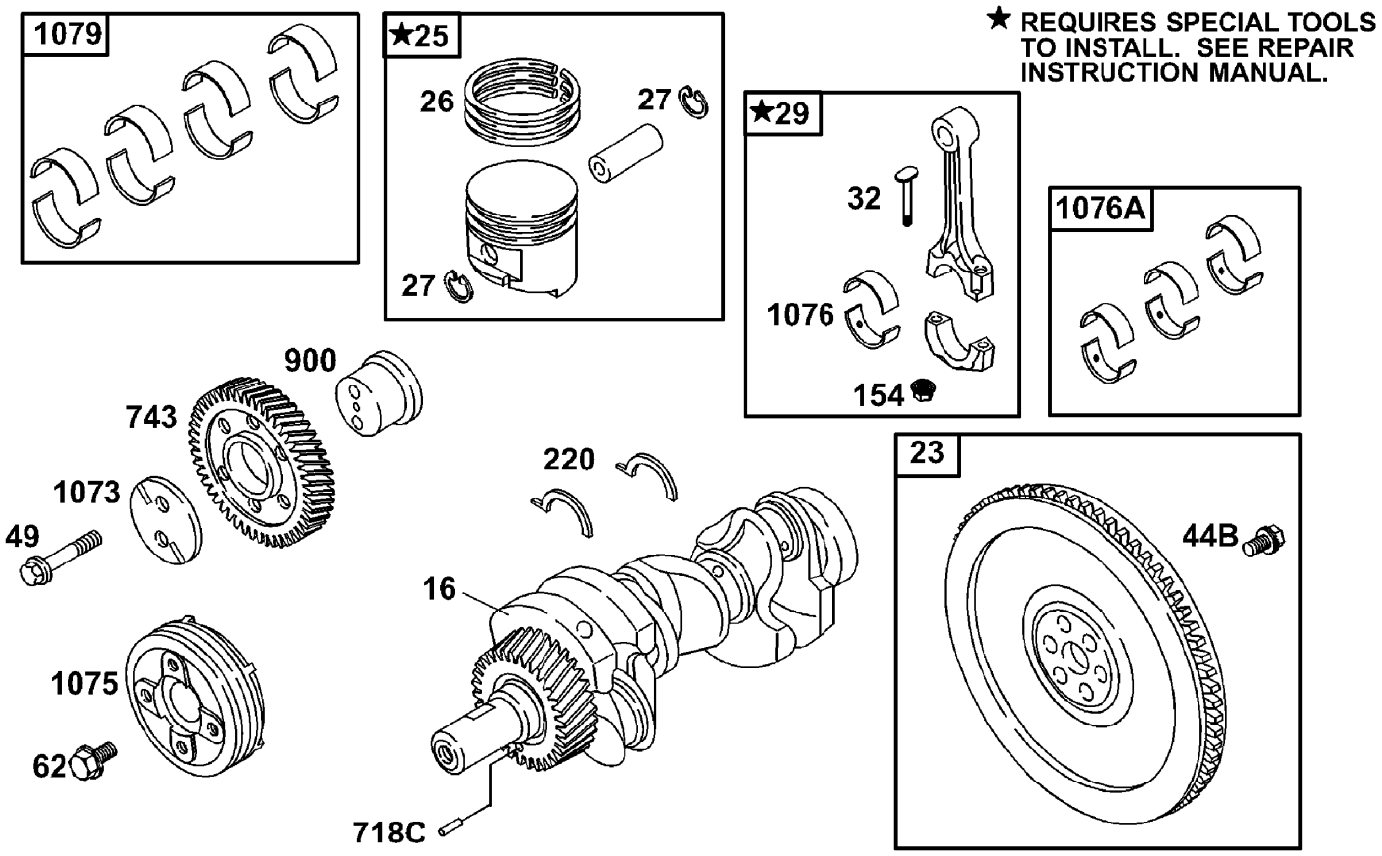

Crankshaft Assembly

Ref.	Part Number	Qty.	Description
16	99-9252	1	Crankshaft
23	99-9024	1	Flywheel
25	99-9605	3	Piston ASM
25	99-9268	3	Piston ASM (.010 In Oversized)
26	99-9606	3	Ring Set
26	99-9269	3	Ring Set (.010 Oversized)
27	99-9607	6	Lock-Pin, Piston
29	99-9608	3	Rod-Connecting
32	99-9030	6	Screw
49	99-9032	2	Screw-Hex
62	99-9033	1	Screw-Hex
154	99-9034	6	Nut-Hex
220	99-9035	1	Shim-Endplay
220	99-9036	1	Shim-Endplay (.005 Oversized)

Ref.	Part Number	Qty.	Description
44B	99-9031	6	Screw-Hex
743	99-9609	1	Gear-Drive
900	99-9039	1	Shaft-Gear
1073	99-9040	1	Plate-Gear, Idler
1075	99-9692	1	Pulley-Crankshaft
1076	99-9042	1	Bearing-Rod
1076A	99-9043	3	Rod Bearing Set
1076A	99-9044	3	Rod Bearing Set (.010 Undersized)
1079	99-9045	1	Main Bearing Set (Set Of 8)
1079	99-9046	1	Main Bearing Set (.010 Undersized)
718C	99-9037	1	Pin-Locating

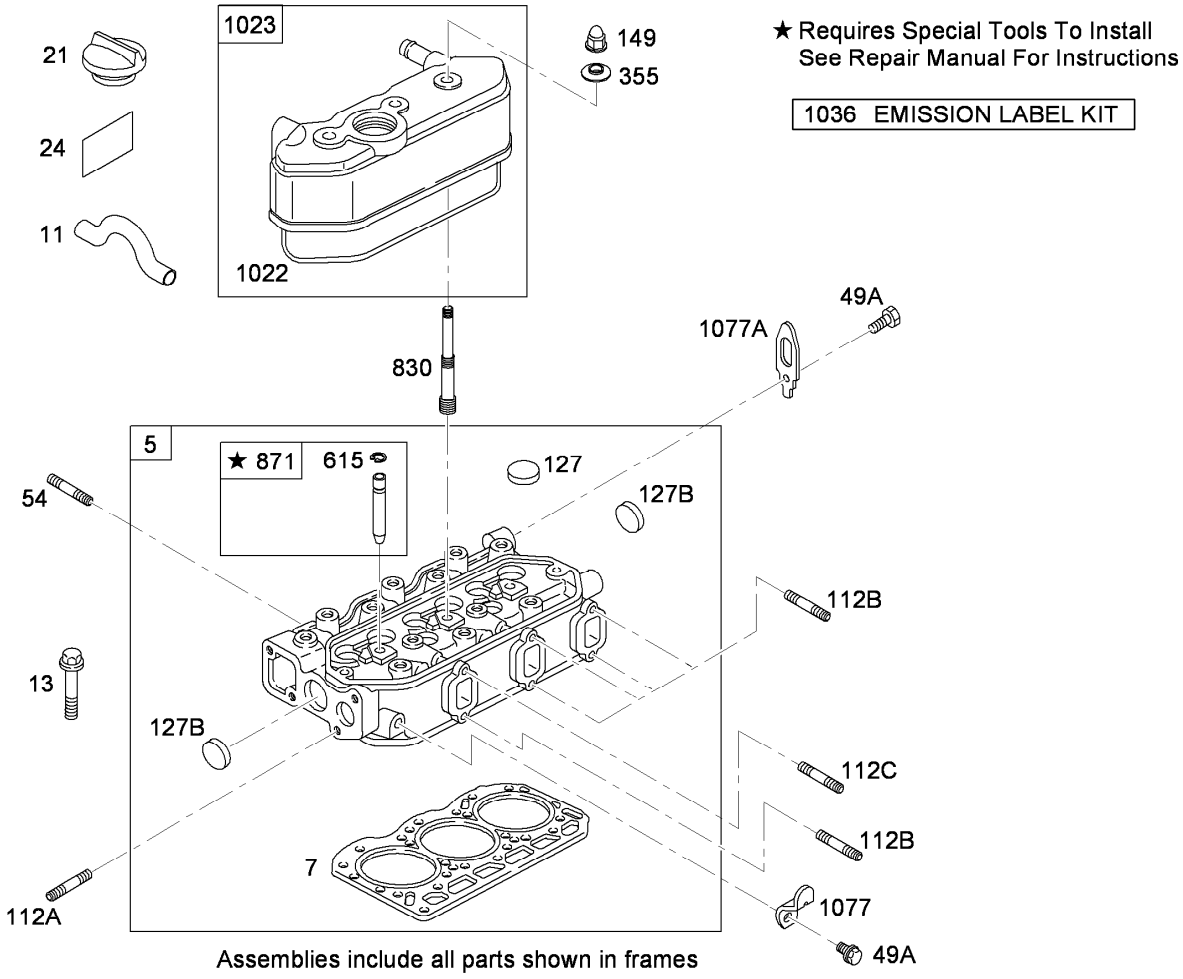

Cylinder Head Assembly

Ref.	Part Number	Qty.	Description
5	99-9611	1	Head-Cylinder
7	99-9612	1	Gasket-Head, Cylinder ●■
11	104-7743	1	Tube-Breather
13	99-9614	14	Screw-Metric
21	99-9052	1	Cap-Fill, Oil
24	105-3817	1	Label-Fill, Oil
54	99-9055	2	Stud-Metric
127	99-9008	2	Plug-Welch
127B	99-9060	2	Plug-Welch
149	99-9061	3	Nut-Hex, Metric
355	99-9063	3	Washer-Seal
49A	99-9054	2	Screw-Hex
615	99-9067	6	Retainer
830	99-9101	3	Stud-Arm, Rocker
871	99-9070	6	Bushing-Guide
1022	99-9073	1	Gasket-Cover, Rocker ●■
1023	100-6402	1	Cover-Rocker
1036	99-9615	1	Emission Label Kit
1077	99-9076	1	Bracket-Lifting
1077A	99-9077	1	Bracket-Lifting
112A	99-9057	2	Stud-Metric
112B	99-9058	5	Stud-Metric
112C	99-9059	1	Stud-Metric

● Included in Gasket Set-Ref. 358.

■ Included in Valve Overhaul Kit-Ref. 1033.

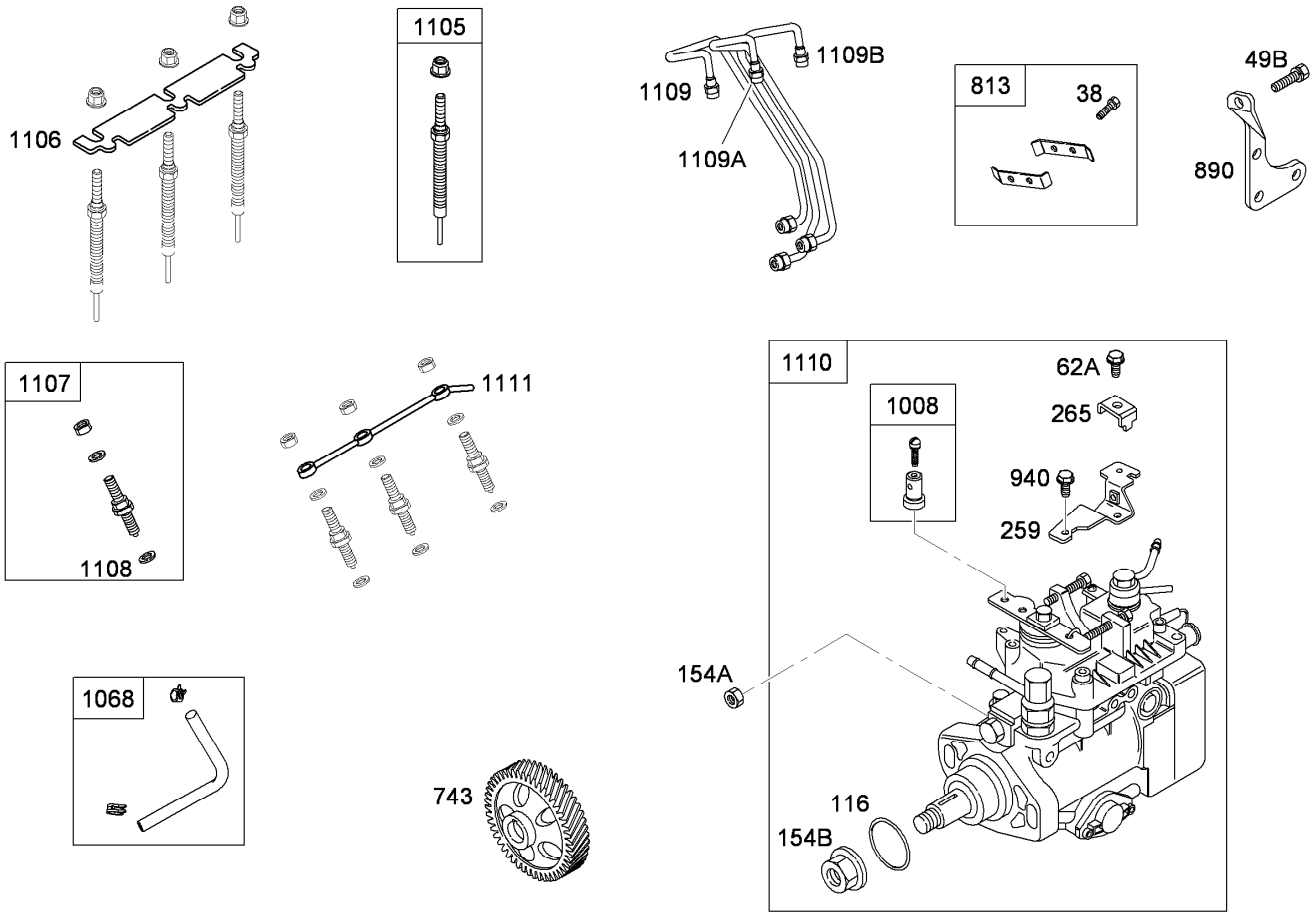

Assemblies include all parts shown in frames

Injection Assembly

Ref.	Part Number	Qty.	Description
38	99-9004	2	Screw-Hex
116	99-9618	1	O-Ring
259	99-9621	1	Bracket-Clamp, Casing
265	99-9622	1	Clamp-Casing
49B	99-9616	4	Screw-Hex
62A	100-6403	1	Screw-Metric
743	99-9624	1	Gear-Drive
813	99-9625	1	Clamp
890	99-9626	1	Bracket-Support
940	100-6410	2	Screw-Hex
1008	99-9628	1	Clamp-Swivel
1068	99-9629	1	Hose / Clamp ASM
1105	114-4695	3	Plug-Glow
1106	99-9631	1	Strap-Plug, Glow
1107	114-4696	3	Injection Nozzle
1108	99-9633	3	Seat-Injector
1109	99-9690	1	Pipe-Injector, No. 1
1110	106-8146	1	Pump-Injection
1111	99-9637	1	Pipe-Return, Fuel
154A	99-9619	2	Nut-Hex, Metric
154B	99-9620	1	Nut-Hex, Metric
1109A	99-9634	1	Pipe-Injector, No. 2
1109B	99-9635	1	Pipe-Injector, No. 3

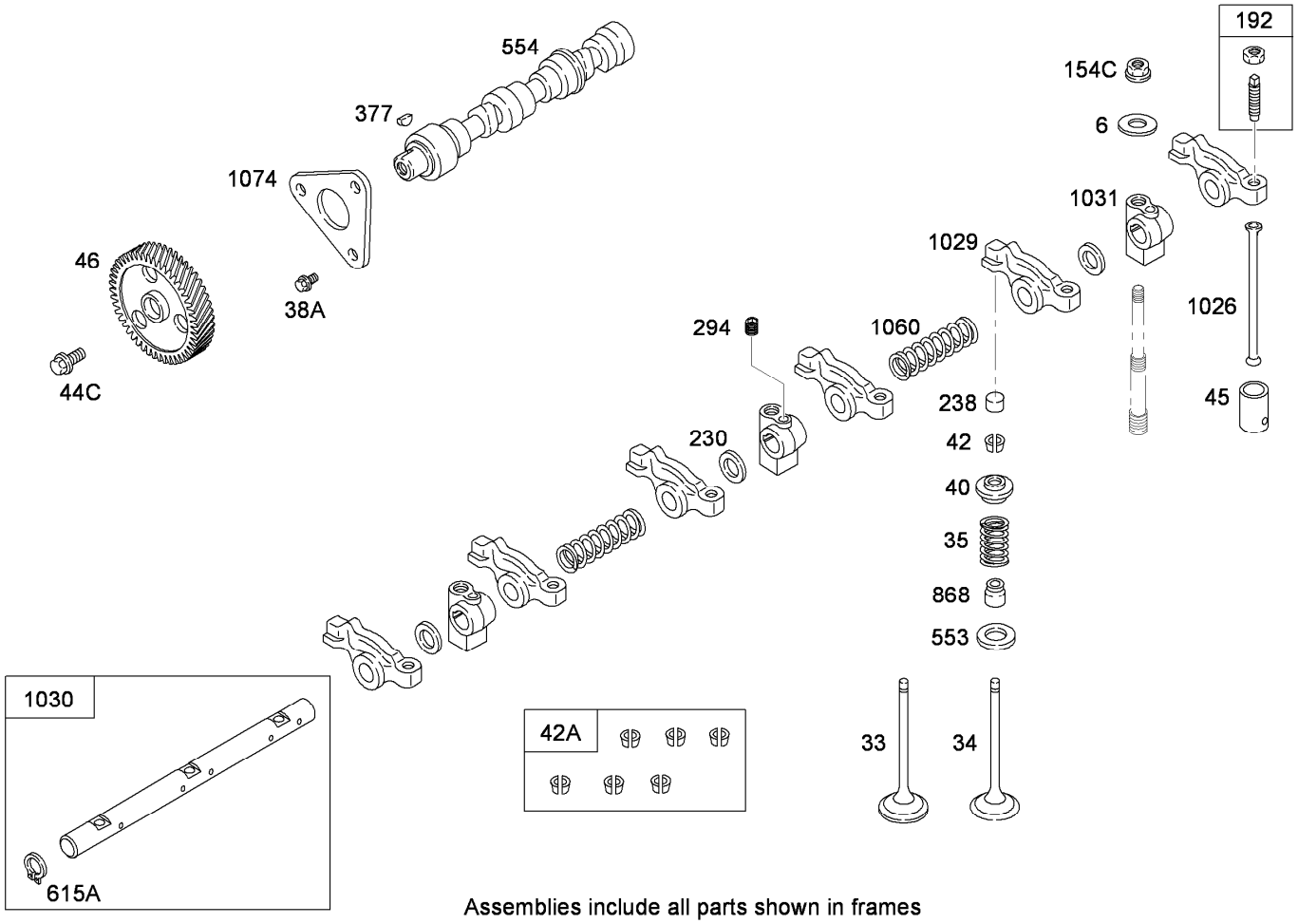

Assemblies include all parts shown in frames

Rocker Arm Assembly

Ref.	Part Number	Qty.	Description
6	99-9079	3	Washer-Flat
33	99-9638	3	Valve-Exhaust
34	99-9639	3	Valve-Intake
35	99-9640	6	Spring-Valve
40	99-9084	6	Retainer-Valve
42	99-9086	1	Keeper-Valve (Set)
42A	99-9087	6	*obs* Keeper-Valve (Set Of 6)
45	99-9088	6	Tappet-Valve
46	99-9641	1	Gear-Cam
192	99-9092	6	Adjuster-Arm, Rocker
230	99-9093	3	Washer-Spacer
238	99-9094	6	Cap-Valve
294	99-9090	1	Screw-Metric

Ref.	Part Number	Qty.	Description
377	99-9642	1	Key-Timing
38A	99-9083	3	Screw-Hex
44C	99-9085	1	Screw-Metric
553	99-9096	6	Seat-Spring, Valve
554	99-9097	1	Shaft-Cam
868	99-9643	6	Seal-Valve
1026	99-9103	6	Rod-Push
1029	99-9104	1	Arm-Rocker
1030	99-9106	1	Shaft-Arm, Rocker
1031	99-9107	3	Support-Arm, Rocker
1060	99-9108	2	Spring-Shaft, Rocker
1074	99-9109	1	Retainer-Camshaft
154C	99-9091	3	Nut-Hex, Metric
615A	99-9099	2	Retainer

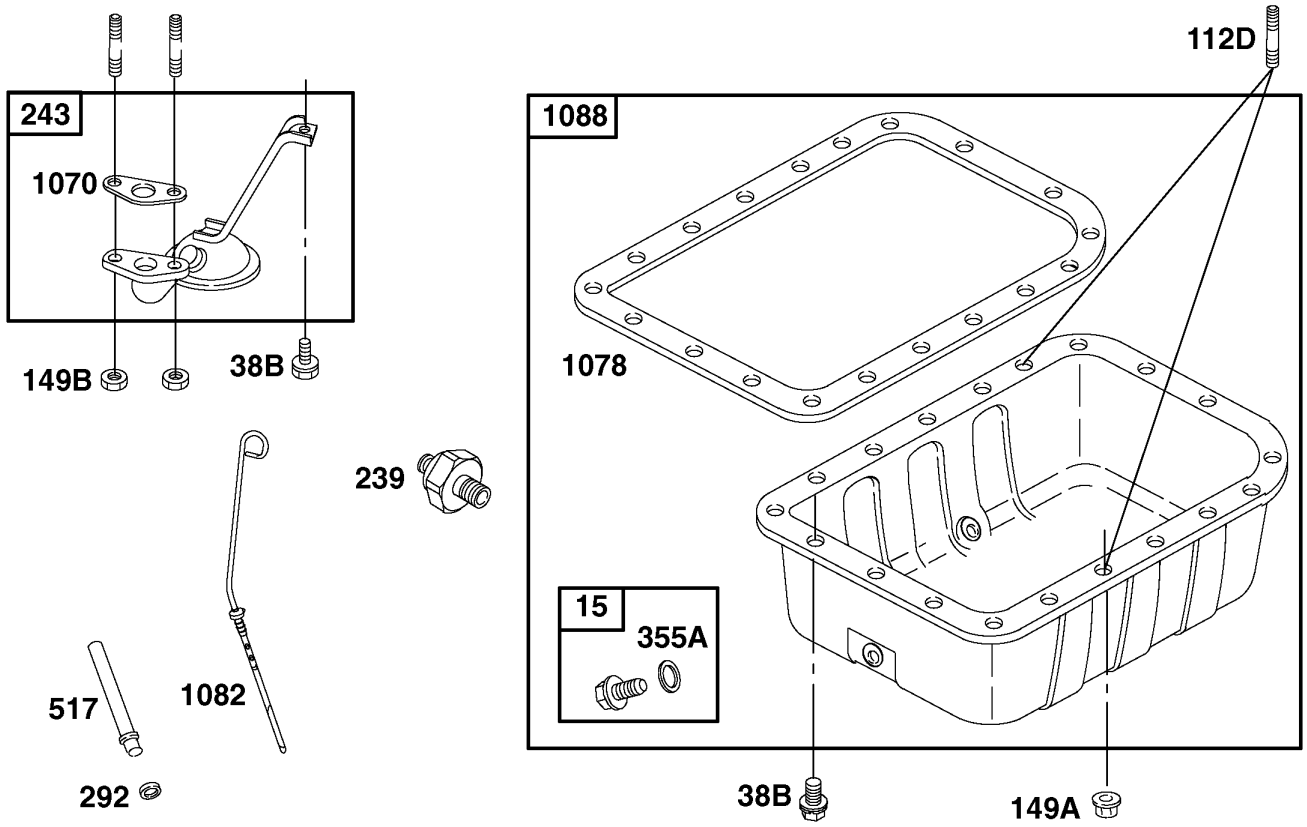

Oil Pan Assembly

Ref.	*Part Number*	*Qty.*	*Description*
15	99-9644	2	Plug-Drain, Oil
239	99-9115	1	Switch-Pressure, Oil
243	99-9116	1	Screen-Pump, Oil
292	99-9265	1	Seal-O-Ring
38B	99-9111	18	Screw-Hex
517	99-9271	1	Collar-Tube, Dipstick
1070	99-9120	1	Gasket-Strainer, Oil
1078	99-9121	1	Gasket-Pan, Oil
1082	110-2597	1	Dipstick
1088	99-9649	1	Pan-Oil
112D	99-9112	2	Stud-Metric
149A	99-9113	2	Nut-Hex, Metric
149B	99-9114	2	Nut-Hex, Metric
355A	99-9645	1	Washer-Seal

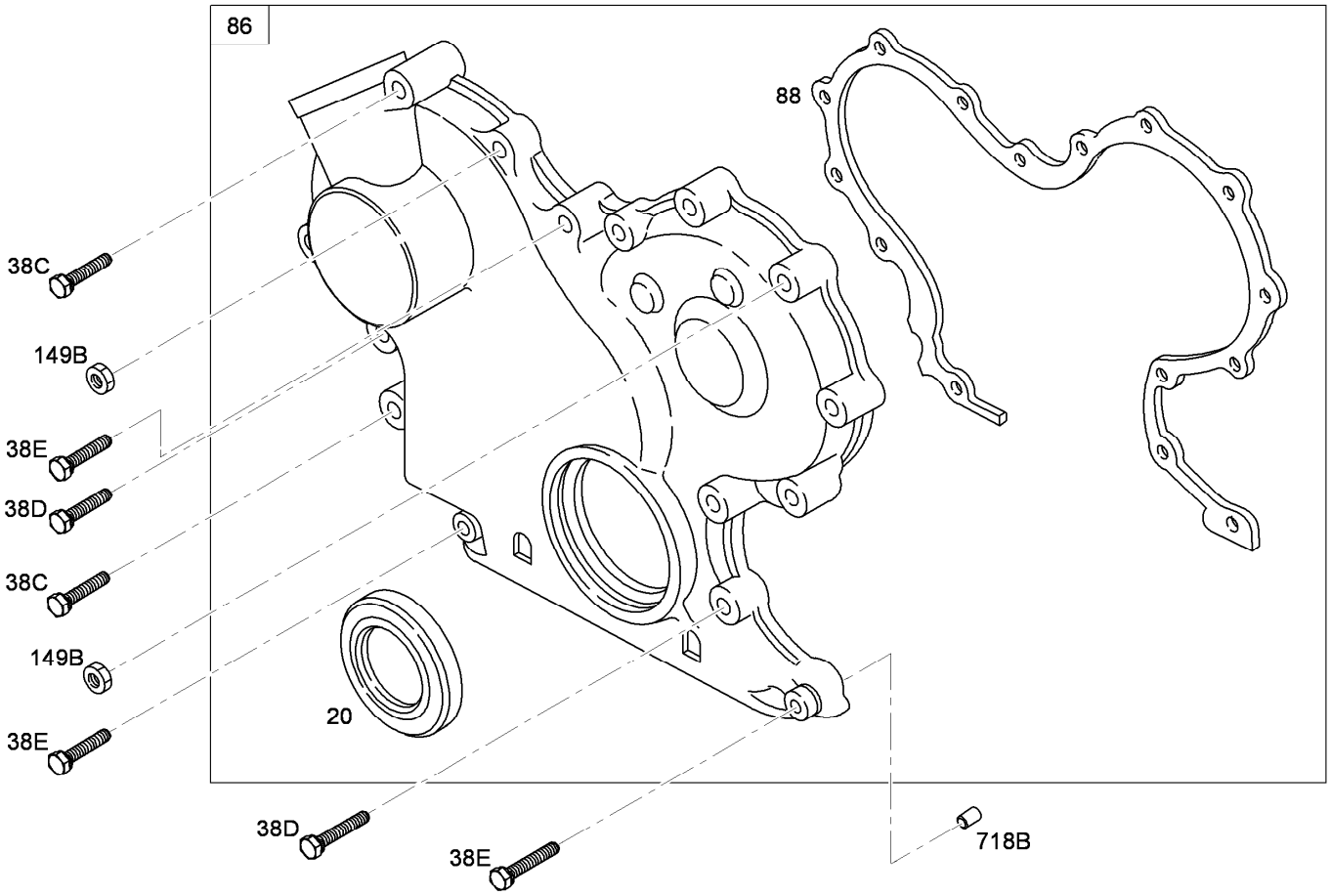

Assemblies include all parts shown in frames

Gear Cover Assembly

Ref.	*Part Number*	*Qty.*	*Description*
20	99-9126	1	Seal-Oil
86	115-2338	1	Gear Cover ASM
88	99-9653	1	Gasket-Cover, Gear
38C	99-9651	2	Screw-Hex
38D	99-9128	9	Screw-Hex
38E	99-9129	3	Screw-Hex
149B	99-9114	2	Nut-Hex, Metric
718B	99-9014	1	Pin-Locating

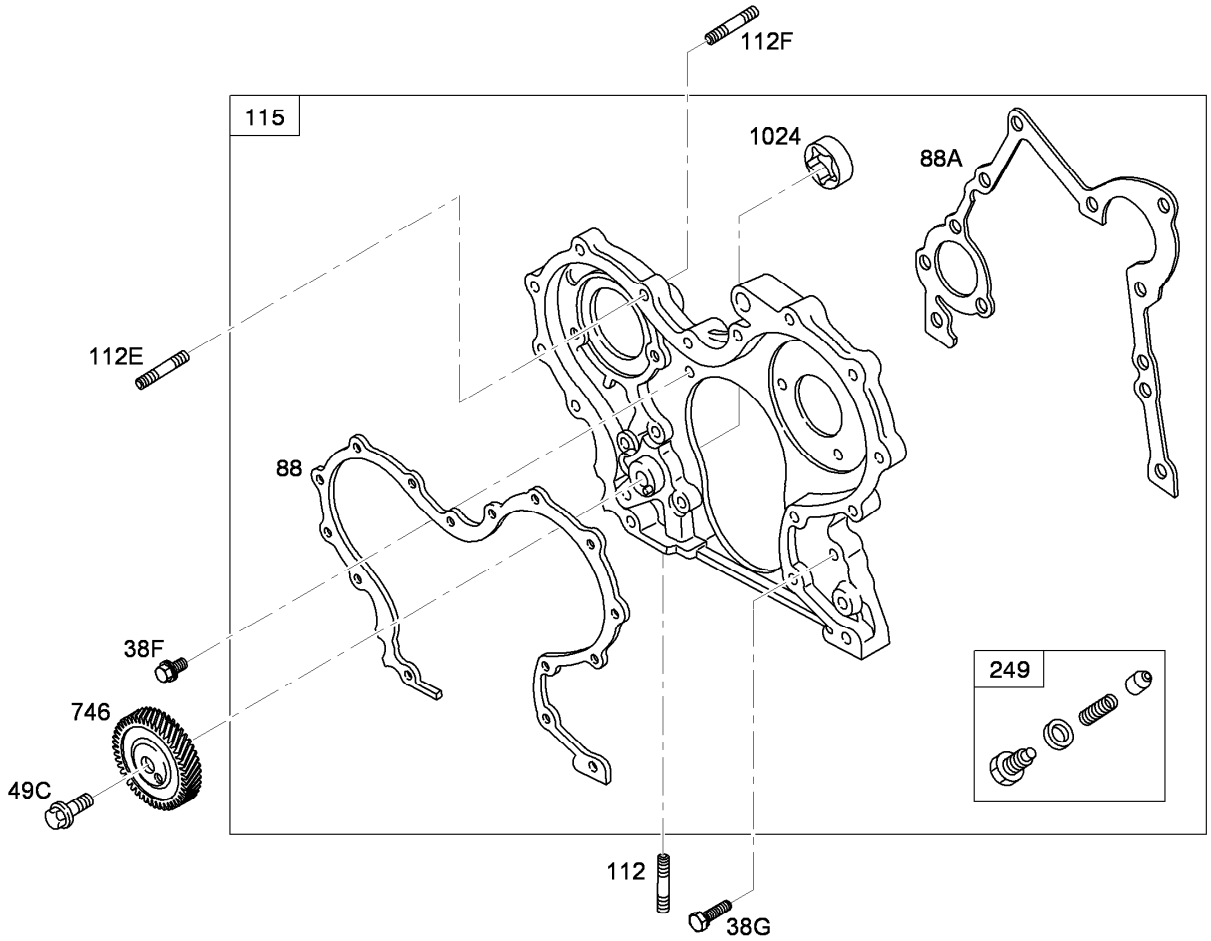

Assemblies include all parts shown in frames

Gear Housing Assembly

Ref.	*Part Number*	*Qty.*	*Description*
88	99-9653	1	Gasket-Cover, Gear ■
88A	99-9136	1	Gasket-Cover, Gear Reduction ■
112	99-9007	1	Stud-Metric
112E	99-9137	2	Stud-Metric
112F	99-9654	2	Stud-Metric
115	99-9655	1	Housing-Gear
249	99-9142	1	Valve-Relief, Oil
38F	99-9134	1	Screw-Hex
38G	99-9133	4	Screw-Hex
49C	99-9135	1	Screw-Hex
746	99-9656	1	Gear-Drive
1024		1	Pump-Oil ●

● Not serviced separately

■ Included in Gasket Set-Ref. 358.

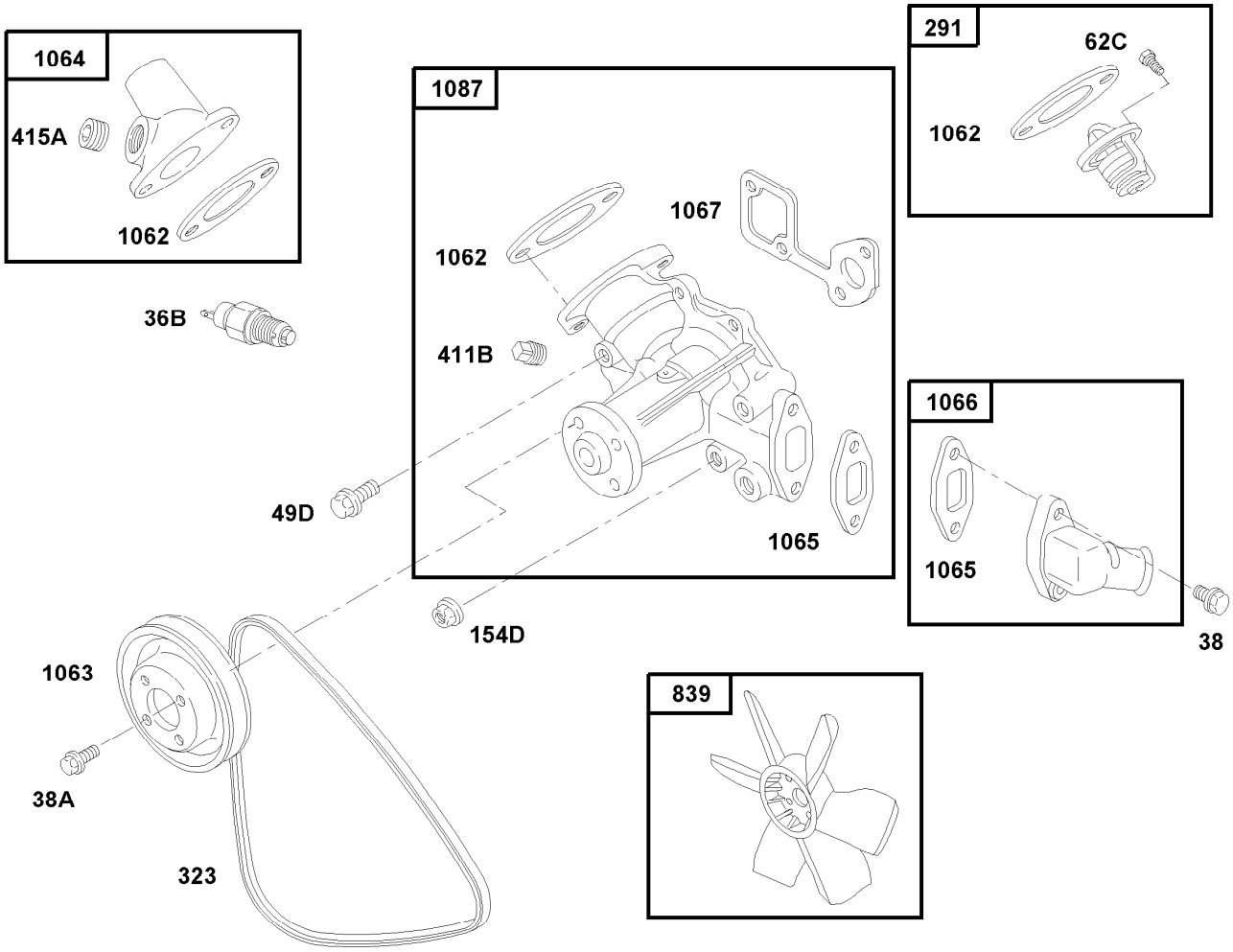

Water Pump Assembly

Ref.	*Part Number*	*Qty.*	*Description*
38	99-9004	2	Screw-Hex
38A	99-9111	4	Screw-Hex
291	99-9155	1	Thermostat
323	99-8153	1	Belt-V
36B	99-9157	1	Switch-Temperature, Water
49D	99-9151	2	Screw-Hex
62C	99-9152	1	Screw-Metric
839	104-3969	1	Fan-Engine
1062	99-9163	1	Gasket-Housing, Outlet
1063	99-9164	1	Pulley-Pump
1064	99-9165	1	Housing-Outlet
1065	99-9166	1	Gasket-Housing, Inlet
1066	99-9167	1	Housing-Inlet
1067	99-9168	1	Gasket-Pump, Water
1087	105-3832	1	Pump-Water
154D	99-9153	1	Nut-Hex, Metric
411B	99-9159	1	Plug
415A	99-9158	1	Plug

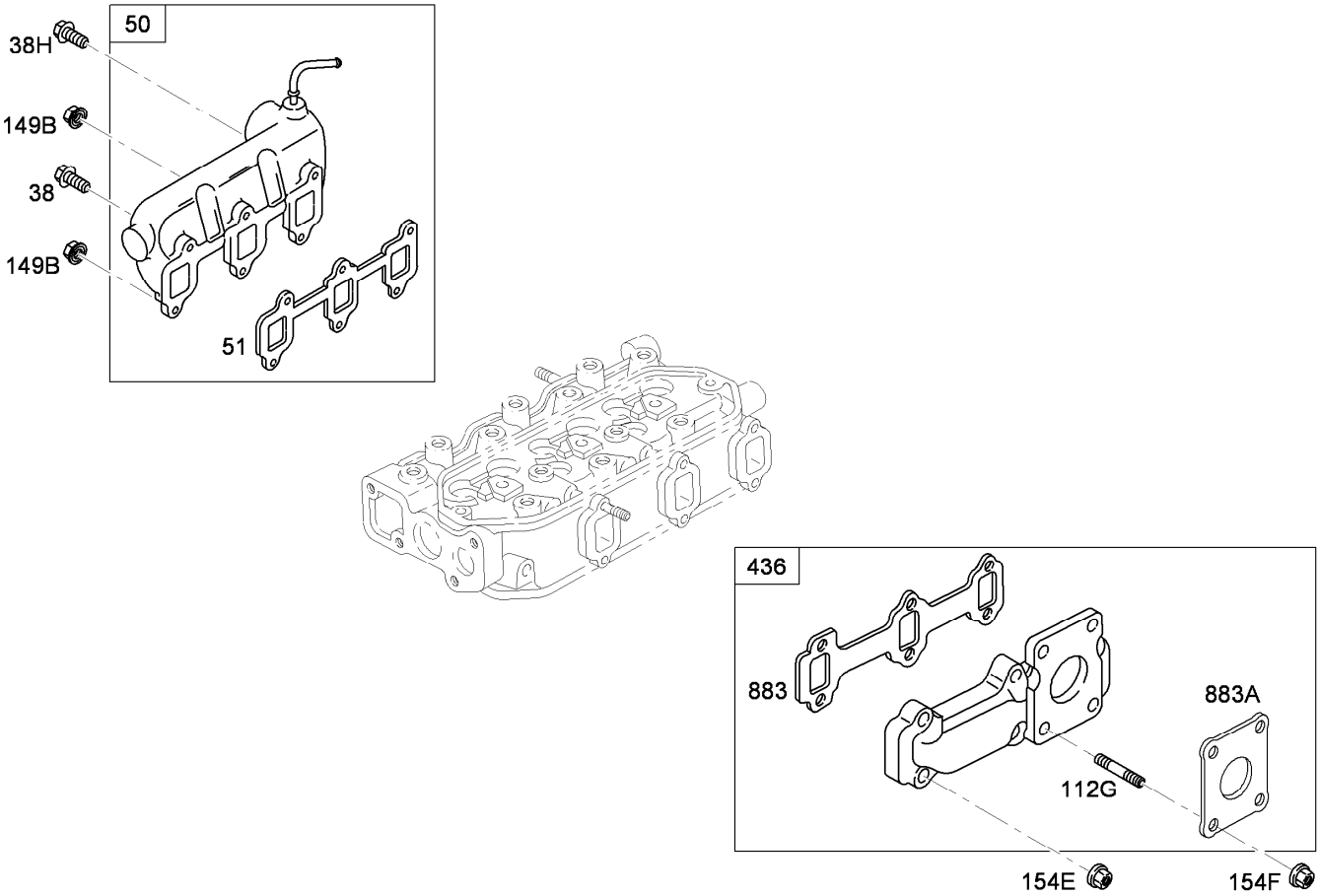

Assemblies include all parts shown in frames

Manifold Assembly

Ref.	*Part Number*	*Qty.*	*Description*
38	99-9004	1	Screw-Hex
38H	99-9660	3	Screw-Hex
50	99-9661	1	Manifold-Intake
51	99-9662	1	Gasket-Intake ● ■
436	99-9177	1	Manifold-Exhaust
883	99-9178	1	Gasket-Exhaust ● ■
883A	99-9179	1	Gasket-Exhaust ●
112G	100-6407	4	Stud-Manifold, Exhaust
149B	99-9114	2	Nut-Hex, Metric
154E	99-9175	6	Nut-Hex, Metric
154F	99-9176	4	Nut-Hex

● Included in Gasket Set-Ref. 358.

■ Included in Valve Overhaul Kit-Ref. 1033.

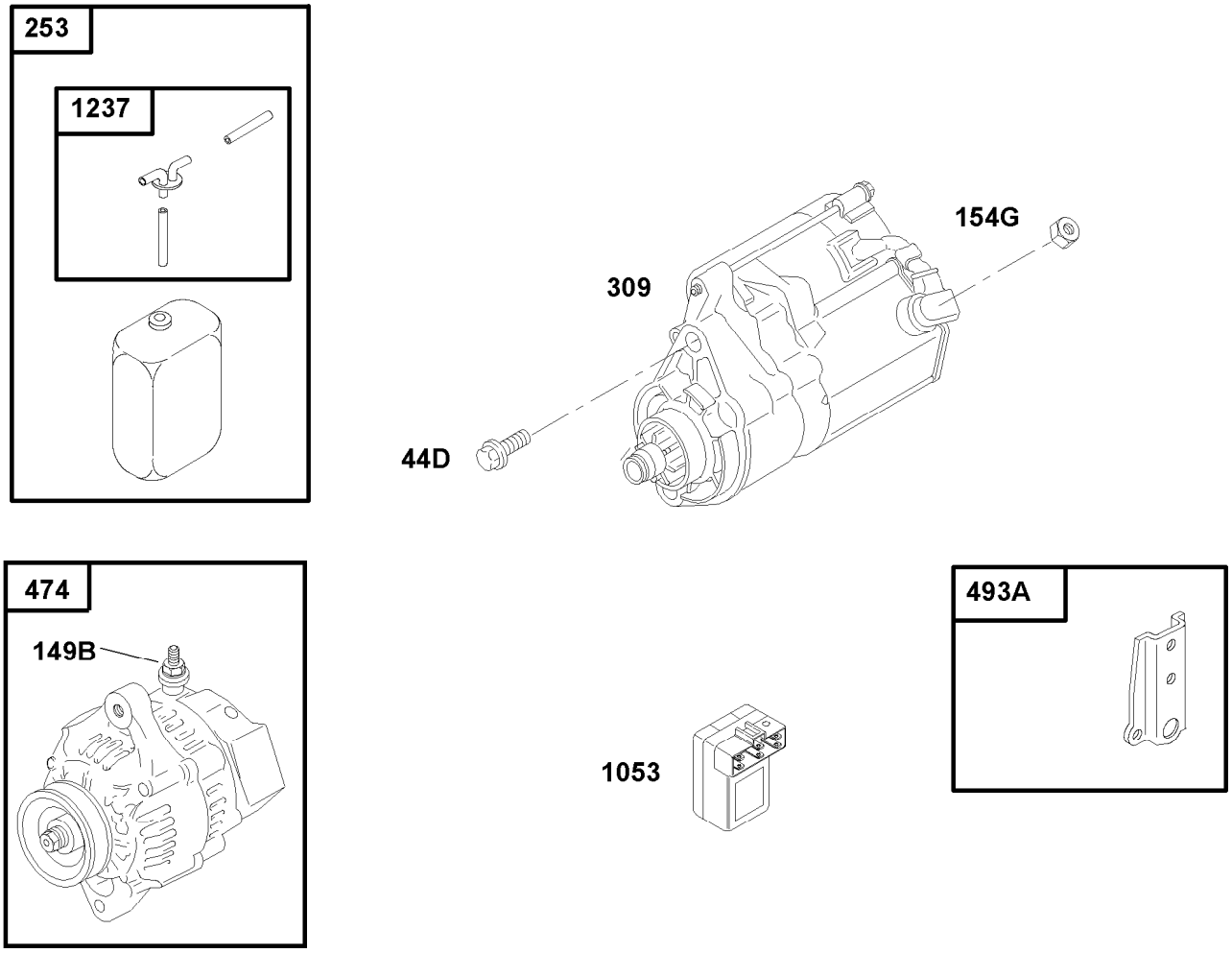

Alternator Assembly

Ref.	*Part Number*	*Qty.*	*Description*
253	104-3930	1	Tank-Radiator, Surge
309	110-2598	1	Motor-Starter
44D	99-9201	2	Screw-Hex
474	99-9209	1	Alternator
1053	115-2292	1	Timer-Glow Plug
1237	106-1886	1	Hose / Clamp ASM
149B	99-9114	1	Nut-Hex, Metric
154G	99-9206	1	Nut-Hex, Metric
493A	104-3931	1	Mounting-Tank, Surge

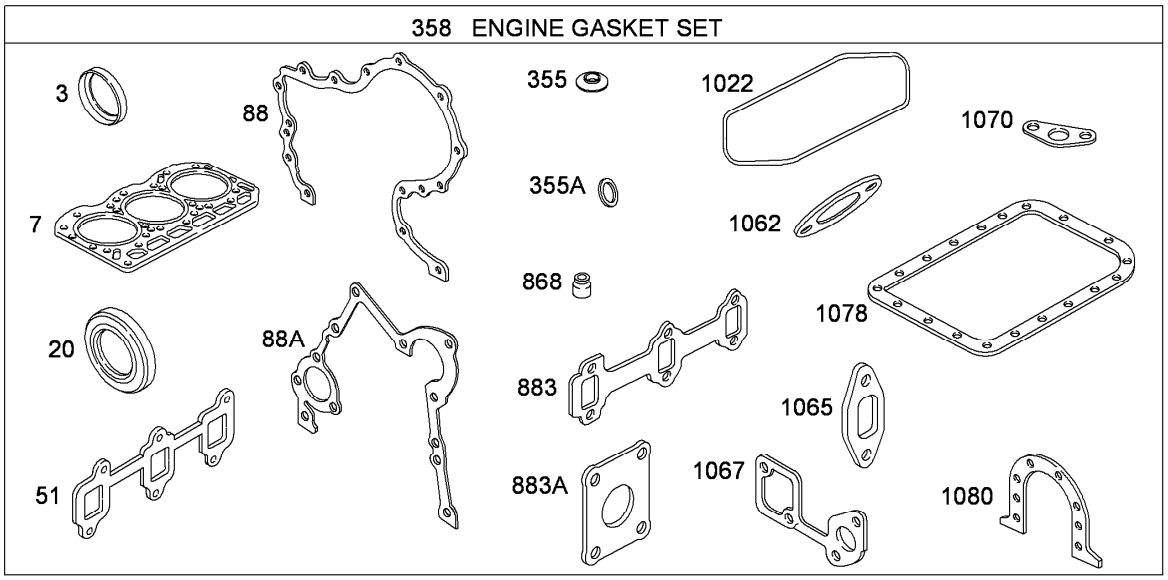

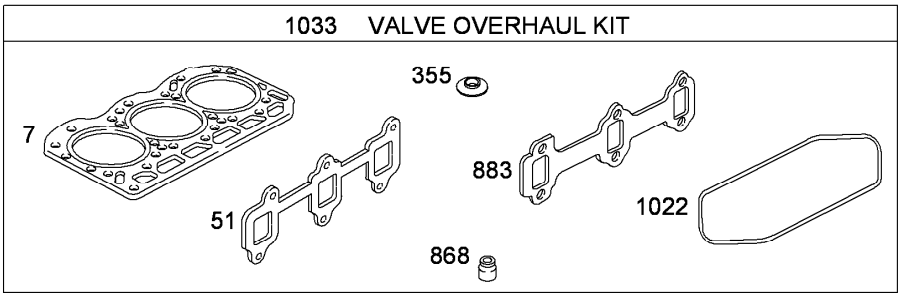

Assemblies include all parts shown in frames

Gasket Set and Valve Overhaul Kit

Ref.	*Part Number*	*Qty.*	*Description*
3	99-9003	1	Seal-Oil
7	99-9612	1	Gasket-Head, Cylinder
20	99-9126	1	Seal-Oil
51	99-9662	1	Gasket-Intake
88	99-9653	1	Gasket-Cover, Gear
88A	99-9136	1	Gasket-Cover, Gear Reduction
355	99-9063	1	Washer-Seal
355A	99-9645	1	Washer-Seal
358	99-9667	1	Gasket-Set
868	99-9643	6	Seal-Valve
883	99-9178	1	Gasket-Exhaust
883A	99-9179	1	Gasket-Exhaust
1022	99-9073	1	Gasket-Cover, Rocker
1033	99-9668	1	Valve Overhaul Kit
1062	99-9163	1	Gasket-Housing, Outlet
1065	99-9166	1	Gasket-Housing, Inlet
1067	99-9168	1	Gasket-Pump, Water
1070	99-9120	1	Gasket-Strainer, Oil
1078	99-9121	1	Gasket-Pan, Oil
1080	99-9021	1	Gasket-Retainer

Attachments and Accessories

For 03431 Reelmaster 2000-D

Product Name	Model/Part
5-Blade 27in Reel Mower	03210
5-Blade 32in Reel Mower	03212
Basket Kit	03227
27 inch Wiehle Roller Kit (3 inch Dia)	03233
32 inch Wiehle Roller Kit (3 inch dia)	03234
8-Blade 27in Reel Mower	03237
8-Blade 32in Reel Mower	03238
11-Blade 27in Reel Mower	03239
Three-Wheel Drive Kit	03429
27 inch Full Roller Kit	03440
Lift Arm Kit, Reelmaster 2300-D	03471
Lift Arm Kit, Reelmaster 2600-D	03472
32 inch Full Roller Kit	03479
Turf Evaluator	04399
27 inch Bedknife-Highcut	104-1380
32 inch Bedknife-Highcut	104-1381
High HOC Support Kit	104-1395
27 inch Wiehle Roller Scraper Kit (3 inch Dia)	104-1398
32 inch Wiehle Roller Scraper Kit (3 inch dia)	104-1399
27in Bedknife-Lowcut	105-6785
Adjustment Gauge Bar ASM	13-8199
Brush and Handle Kit	29-9100
Arm Rest Kit	30707
27 inch Full Roller Scraper Kit	60-9560
27 inch Sectional Roller ASM	62-4970
27 inch Anti-Scalp Roller ASM	63-5090
27 inch Comb Kit	67-9400
Weight Kit	83-9370
Weight	83-9390-01
Fixed Cutting Unit Kit	93-6915
27 inch and 32 inch Skid Kit	94-3664
Weight-Rear	94-3698-01
32 inch Full Roller Scraper Kit	94-5080
32 inch Anti-Scalp Roller ASM	94-5981
32 inch Sectional Roller ASM	94-5982

Notes:

TORO®

Count on it.