Form No. 3367-313 Rev A

CE Kit

Groundsmaster 360 Multi-Purpose Machine

Model No. 30507

Installation Instructions

Note: Determine the left and right sides of the machine from the normal operating position.

Safety

Safety and Instructional Decals

Safety decals and instructions are easily visible to the operator and are located near any area of potential danger. Replace any decal that is damaged or lost.

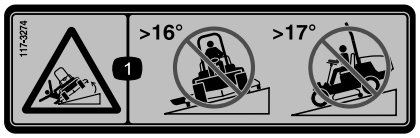

117-3274

1. Tipping hazard—do not mow across slopes greater than 16 degrees, do not mow up and down slopes greater than 17 degrees.

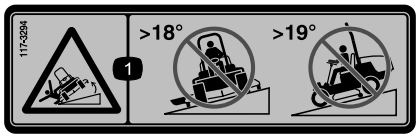

117-3294

1. Tipping hazard—do not mow across slopes greater than 18 degrees, do not mow up and down slopes greater than 19 degrees.

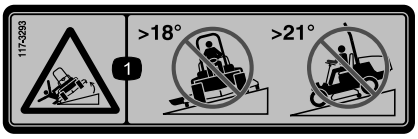

117-3293

1. Tipping hazard—do not mow across slopes greater than 18 degrees, do not mow up and down slopes greater than 21 degrees.

© 2010—The Toro® Company
8111 Lyndale Avenue South
Bloomington, MN 55420

Register at www.Toro.com.

CE

Original Instructions (EN)
Printed in the USA.
All Rights Reserved

Installation

Loose Parts

Use the chart below to verify that all parts have been shipped.

Procedure	Description	Qty.	Use
1	Push nut (3/8 inch)	2	Secure the storage compartment
2	Locking latch Latch plate Bolt (3/8 x 1 inch) Flange lock nut (3/8 inch) Latch key	1 1 1 1 1	Install the hood locking latch
3	Flange head bolt (3/8 x 1 inch) Push nut (3/8 inch) Retaining nut (3/8 inch)	1 1 1	Secure the floor plate
4	Flange head bolt (3/8 x 1 inch) Push nut (3/8 inch) Retaining nut (3/8 inch)	1 1 1	Secure the seat plate
5	Push nut	2	Secure the front cover
6	Flange head bolt (5/16 x 1-1/4 inches) Retaining nut (5/16 inch) Push nut	2 2 2	Secure the belt covers
7	Push nut	4	Secure the foot plate (cab models only)
8	Push nut	4	Secure the fire wall (cab models only)
9	Safety decal, 117–3274 Safety decal, 117–3294 Safety decal, 117–3293	1 1 1	Install the decal

1

Securing the Storage Compartment

Parts needed for this procedure:

2	Push nut (3/8 inch)

Procedure

1. Park the machine on a level surface, lower the deck, engage the parking brake, and turn the engine off. Remove the key from the ignition switch.
2. Unlatch and raise the hood. Use the prop rod to hold it in place.
3. Remove the (2) flange head bolts securing the storage compartment support bracket to the frame (Figure 1).

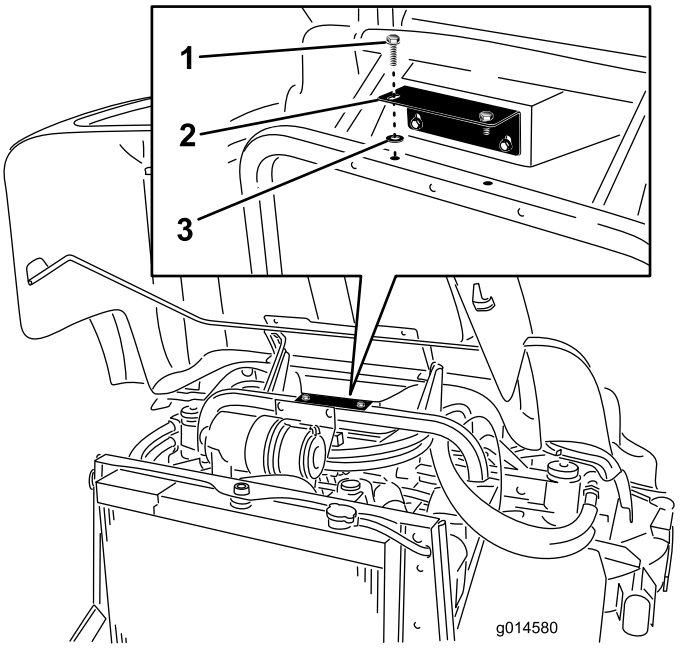

Figure 1

1. Flange head bolt
2. Storage compartment support bracket
3. Push nut

4. Install the flange head bolts into the storage compartment support bracket using push nuts (3/8 inch).
5. Secure the storage compartment support bracket with the flange head bolts.

2

Installing the Hood Locking Latch

Parts needed for this procedure:

1	Locking latch
1	Latch plate
1	Bolt (3/8 x 1 inch)
1	Flange lock nut (3/8 inch)
1	Latch key

Procedure

1. Unlatch and raise the hood. Use the prop rod to hold it in place.
2. Remove the plug from the square hole in the right side of the hood. Discard the plug (Figure 2).
3. Remove the locking nut from the latch assembly.

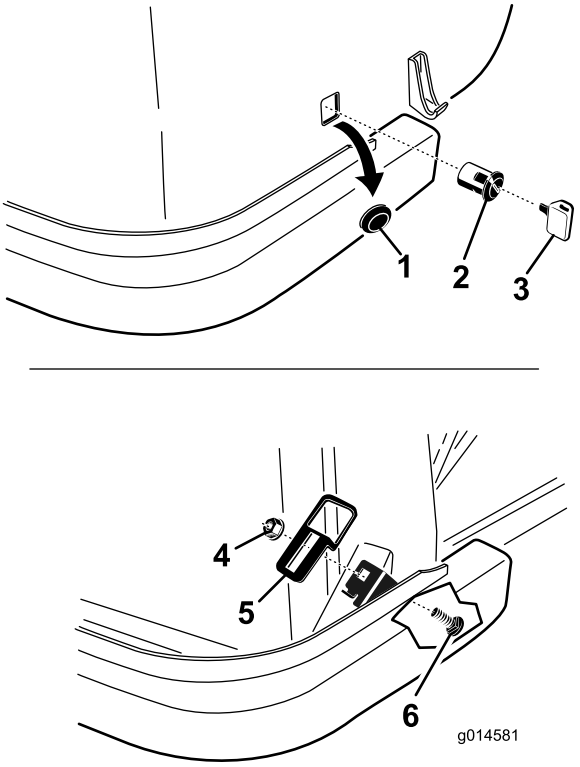

Figure 2

1. Plug
2. Latch
3. Latch key
4. Flange nut
5. Latch plate
6. Carriage screw

4. Install the locking latch through the square hole in the right side of the hood. The catch must be positioned inside the hood and pointing downward.
5. Install the locking nut onto the latch to secure it to the hood.
6. Locate the square hole in the tab on the right side of the frame member. Mount the latch plate to the tab with a carriage screw and flange nut. Position the latch plate as shown in Figure 2.
7. Close the hood slowly to see if latch catches. If it does not, loosen the screw securing the latch plate to the radiator support and adjust the plate as necessary. Tighten the screws and verify the latch catches.
8. Use the key to lock/unlock latch. Store the key in a convenient and memorable place.

3

Securing the Floor Plate

Parts needed for this procedure:

1	Flange head bolt (3/8 x 1 inch)
1	Push nut (3/8 inch)
1	Retaining nut (3/8 inch)

Procedure

1. Raise the floor plate.
2. Install a retaining nut at the frame hole under the right front corner of the floor plate (Figure 3).

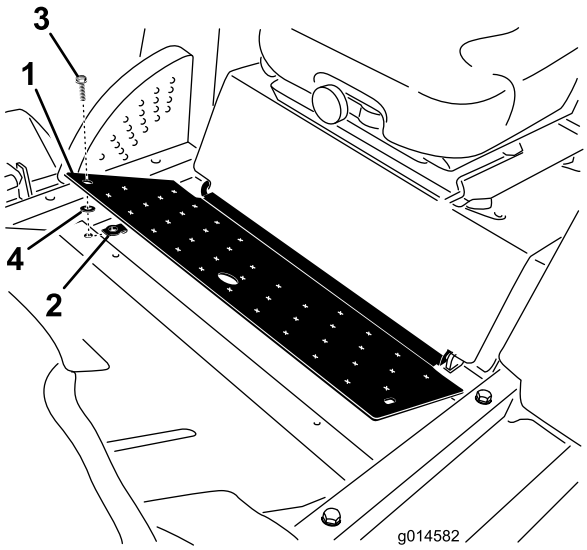

Figure 3

1. Floor plate
2. Retaining nut
3. Flange head bolt
4. Push nut

3. Install a flange head bolt into the floor plate using a push nut (3/8 inch).
4. Secure the floor plate to the frame with the flange head bolt (3/8 x 1 inch).

4

Securing the Seat Plate

Parts needed for this procedure:

1	Flange head bolt (3/8 x 1 inch)
1	Push nut (3/8 inch)
1	Retaining nut (3/8 inch)

Procedure

1. Raise the seat plate.
2. Install a retaining nut at the frame hole under the left rear corner of the seat plate (Figure 4).

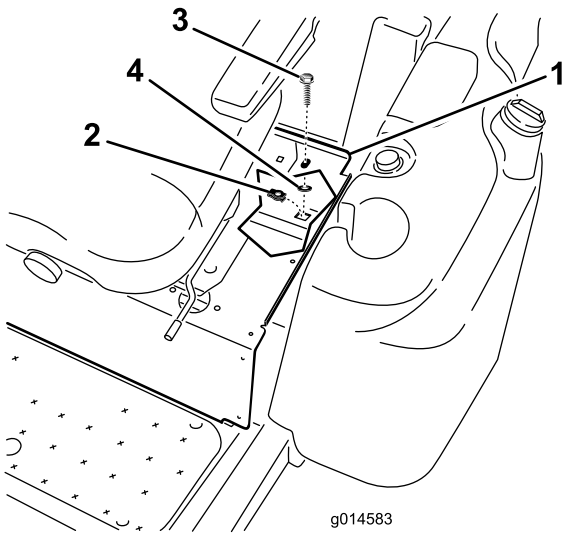

Figure 4

1. Seat plate
2. Retaining nut
3. Flange head bolt
4. Push nut

3. Install the flange head bolt into the seat plate using a push nut (3/8 inch).
4. Secure the seat plate to the frame with the flange head bolt (3/8 x 1 inch).

5

Securing the Front Cover

Parts needed for this procedure:

2	Push nut

Procedure

1. Remove the (2) flange head bolts securing the front cover to the top of the front axle (Figure 5).

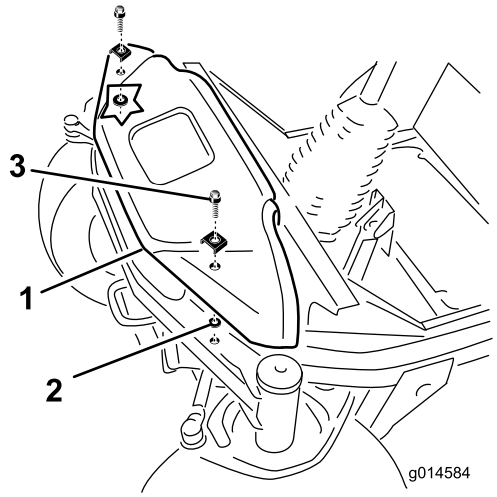

Figure 5

1. Front cover
2. Push nut
3. Flange head bolt

2. Install the flange head bolts to the front cover using the push nuts (3/8 inch).
3. Secure the front cover to the front axle with the flange head bolts.

6

Securing the Belt Covers

Parts needed for this procedure:

2	Flange head bolt (5/16 x 1-1/4 inches)
2	Retaining nut (5/16 inch)
2	Push nut

Procedure

Perform this procedure for the right and left side belt covers.

1. Remove the hand knobs securing the belt covers to the mower deck (Figure 6). Remove the belt covers.
2. Install a retaining nut at the forward hole in the deck bracket.

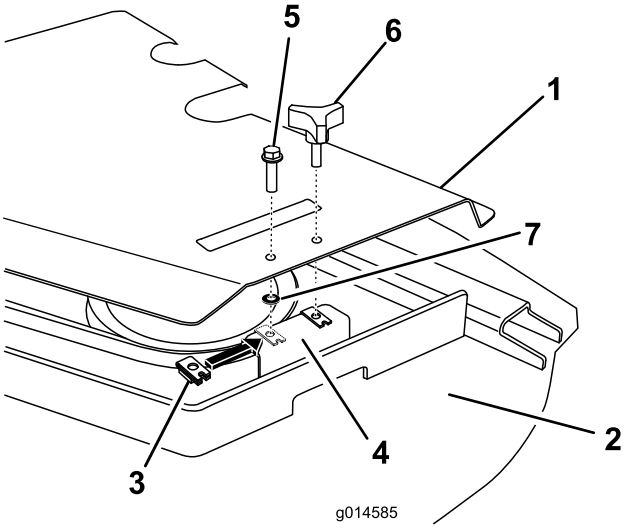

Figure 6

1. Belt cover
2. Mower deck
3. Retaining nut
4. Deck bracket
5. Bolt (5/16 x 1–1/4 inches)
6. Hand knob
7. Push nut

3. Install the bolt into the belt cover using a push nut (5/16 inch).
4. Secure the belt cover to the deck bracket with the bolt (5/16 x 1-1/4 inches).
5. Replace the hand knob.

7

Securing the Floor Plate

Parts needed for this procedure:

4	Push nut

Procedure

(Cab models only)

1. Remove the (4) bolts securing the floor plate to the frame (Figure 7).

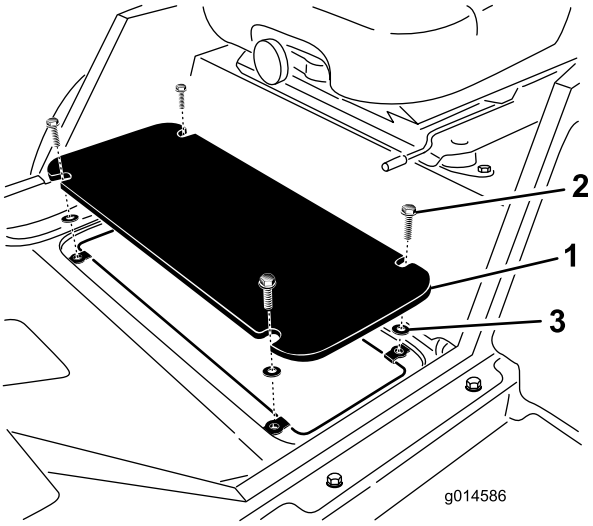

Figure 7

1. Floor plate
2. Flange head bolt
3. Push nut

2. Install the flange head bolts into the floor plate using push nuts (3/8 inch).
3. Secure the floor plate to the frame with the flange head bolts.

8

Securing the Fire Wall

Parts needed for this procedure:

4	Push nut

Procedure

(Cab models only)

1. Remove the (4) bolts securing the fire wall to the frame (Figure 8).

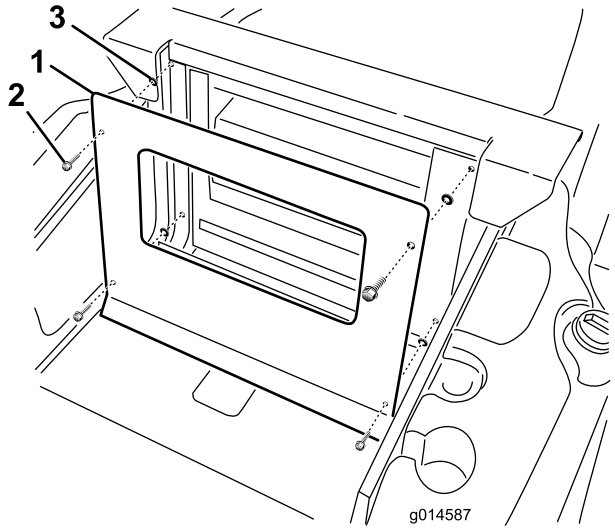

Figure 8

1. Fire wall
2. Flange head bolt
3. Push nut

2. Install the flange head bolts into the fire wall using push nuts (3/8 inch).
3. Secure the fire wall to the frame with the flange head bolts.

9

Installing the Decal

Parts needed for this procedure:

1	Safety decal, 117–3274
1	Safety decal, 117–3294
1	Safety decal, 117–3293

Procedure

1. Thoroughly clean the area where the decal is to be installed (Figure 9).

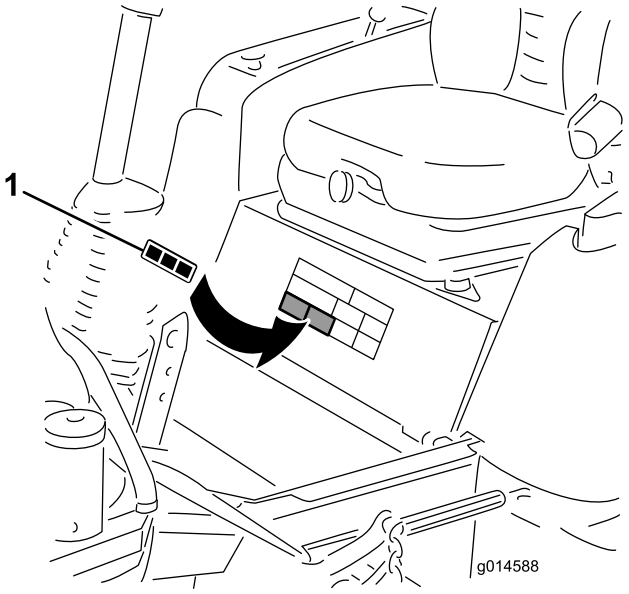

Figure 9

1. Decal

2. Determine which decal is applicable for the model of the machine, peel the decal from the backing and install it in place. Discard remaining decals.
   - Decal 117–3274-For Models 30541 & 30542
   - Decal 117–3294-For Models 30538 & 30539
   - Decal 117–3293-For Models 30535 & 30536
3. Squeegee across the surface of the decal, starting at the center of the decal and working toward the edges, using overlapping strokes.



Count on it.