Form No. 3367-429 Rev A

TORO®

Count on it.

Parts Catalog

Greensmaster® 1000 Mower

Model No. 04052—Serial No. 311000001 and Up

CE

Register at www.Toro.com.

Original Instructions (EN)

Ordering Replacement Parts

To order replacement parts, please supply the part number, the quantity, and the description of each part desired.

Understanding Reference Numbers

Each identified part in an illustration has a reference number. The reference number for a part also appears in the parts list, along with other information about the part.

This catalog uses two special reference number formats, one to indicate parts in a service assembly and another to indicate the quantity of a given part in an illustration.

Service Assembly Reference Numbers

Parts in service assemblies have reference numbers in the form a:b. The a represents the reference number of the entire service assembly and the b represents a sequential number unique to each part within the service assembly.

For example, a wheel assembly might be identified by reference number 6, the tire by 6:1, the valve by 6:2, and the wheel by 6:3. When you order the assembly identified by reference number 6, you receive all parts identified by reference numbers 6:1,6:2, and 6:3. However, you may also order any part individually. Reference numbers of this type appear in illustration and in parts lists.

Reference Numbers Indicating Quantity

In an illustration, if a reference number indicates more than one part, the reference number has the form nX y. The n represents the quantity of the part, the X is the multiplication symbol, and the y represents the reference number.

For example, in an illustration, the reference number 2X 37 means that two of the parts identified by reference number 37 are indicated.

List of Abbreviations

AR: as required

ASM: assembly

BBC: blade brake control

BHTF: button head thread forming

CARR: carriage

CCW: counter clockwise

CW: clockwise

DEG: degrees

ECM: electronic control module

EXT: external

FH: flat head

GA: gauge

HD: heavy-duty

HF: hex flange

HH: hex head

HHF: hex head flange

HHFTF: hex head flange thread forming

HJ: hex jam

HLH: hex lag head

HOC: height-of-cut

HSBH: hex socket button head

HSFH: hex socket flat head

HSH: hex socket head

HWH: hex washer head

HWHTF: hex washer head thread forming

HYD: hydraulic

LH: left hand

LP: Liquid Propane

NI: nylon insert

NPTF: national pipe thread fine

PFH: phillips flat head

PPH: phillips pan head

PPHTF: phillips pan head thread forming

PRH: phillips round head

PTH: phillips truss head

PTO: power-take-off

RH: right hand

ROPS: roll-over protection system

RRB: rear roller brush

SFH: slotted fillister head

SHH: slotted hex head

SHWH: slotted hex washer head

SPH: slotted pan head

SQH: square head

SRH: slotted round head

STD: standard

TAP: self tapping

TTH: torx truss head

© 2010—The Toro® Company
8111 Lyndale Avenue South
Bloomington, MN 55420

Contact us at www.Toro.com.
Printed in the USA.
All Rights Reserved

Contents

Frame Assembly 4
Engine Mount And Frame Assembly 5
Reel Drive Assembly 6
Reel Assembly 8
Drum Drive Assembly 9
Drum and Basket Assembly 11
Differential Assembly No. 93-6055 12
Inner Countershaft Assembly 13
Outer Crankshaft Assembly 14
Engine Assembly 15
Bellcrank Assembly 16
Handle Assembly 17
Cylinder and Crankcase Assembly 19
Piston and Crankshaft Assembly 20
Valve and Camshaft Assembly 21
Lubrication Equipment Assembly 22
Cooling Equipment Assembly 23
Electric Equipment Assembly 24
Control Equipment Assembly 25
Carburetor Assembly 26
Air Filter and Muffler Assembly 27
Fuel Tank and Valve Assembly 28
Starter Assembly 29
Label Set 30
Attachments and Accessories 31

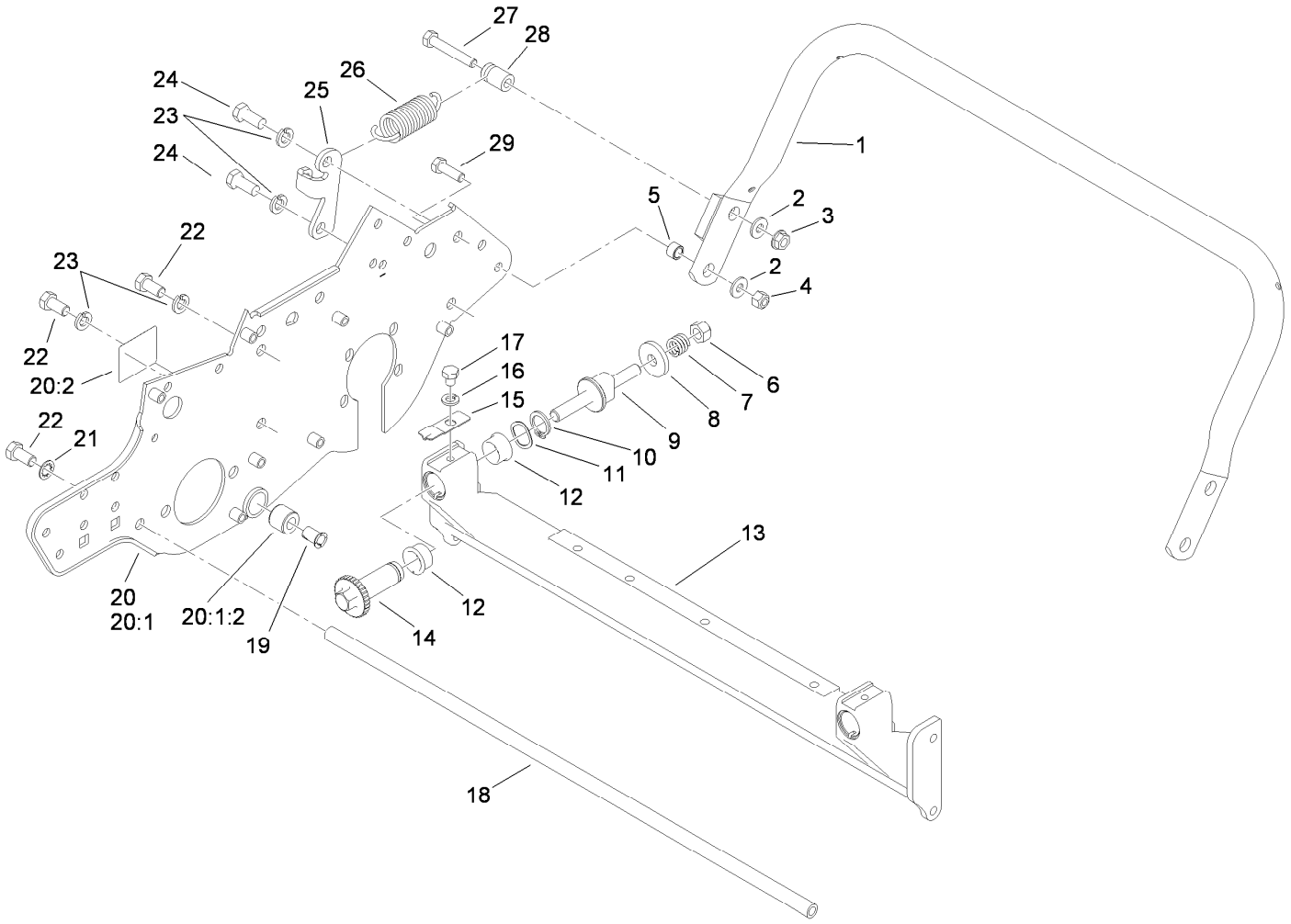

Frame Assembly

Ref.	Part Number	Qty.	Description
1	65-7850-03	1	Kickstand ASM
2	3256-2	3	Washer-Flat
3	32128-25	1	Nut-HF
4	3296-29	2	Nut-Lock, NI
5	65-7910	2	Spacer
6	33025-00	2	Nut-Lock, NI
7	99-3755	2	Spring-Compression
8	99-2098	2	Washer
9	99-2096	2	Screw-Adjuster, Bedbar
10	32120-93	2	Ring-Retaining
11	106-5335	2	Washer-Wave
12	106-5344	4	Bushing-Flange, Keyed
13	112-9272-01	1	Crossmember
14	106-5363	2	Shaft-Adjuster
15	99-2097	2	Detent
16	3253-4	2	Washer-Lock
17	322-26	2	Screw-HH

Ref.	Part Number	Qty.	Description
18	88-7110	1	Rod-Support, Frame
19	52-2890	2	Bushing-Nylon
20	93-6093	1	RH Side Plate ASM
20:1		1	RH Sideplate/Bushing ASM ●
20:1:2	63-9510	1	Bushing
20:2	93-9389	2	Decal-Warning, Belt (Japan)
20:2	93-9356	2	Decal-Warning, Belt
21	3254-6	2	Washer-Lock, Internal
22	323-4	6	Screw-HH
23	3253-21	4	Washer-Lock
24	323-5	2	Screw-HH
25	65-7890	1	Bracket
26	65-7880	1	Spring-Extension
27	322-10	1	Screw-HH
28	65-7900	1	Retainer-Spring
29	322-5	2	Screw-HH

● Not serviced separately

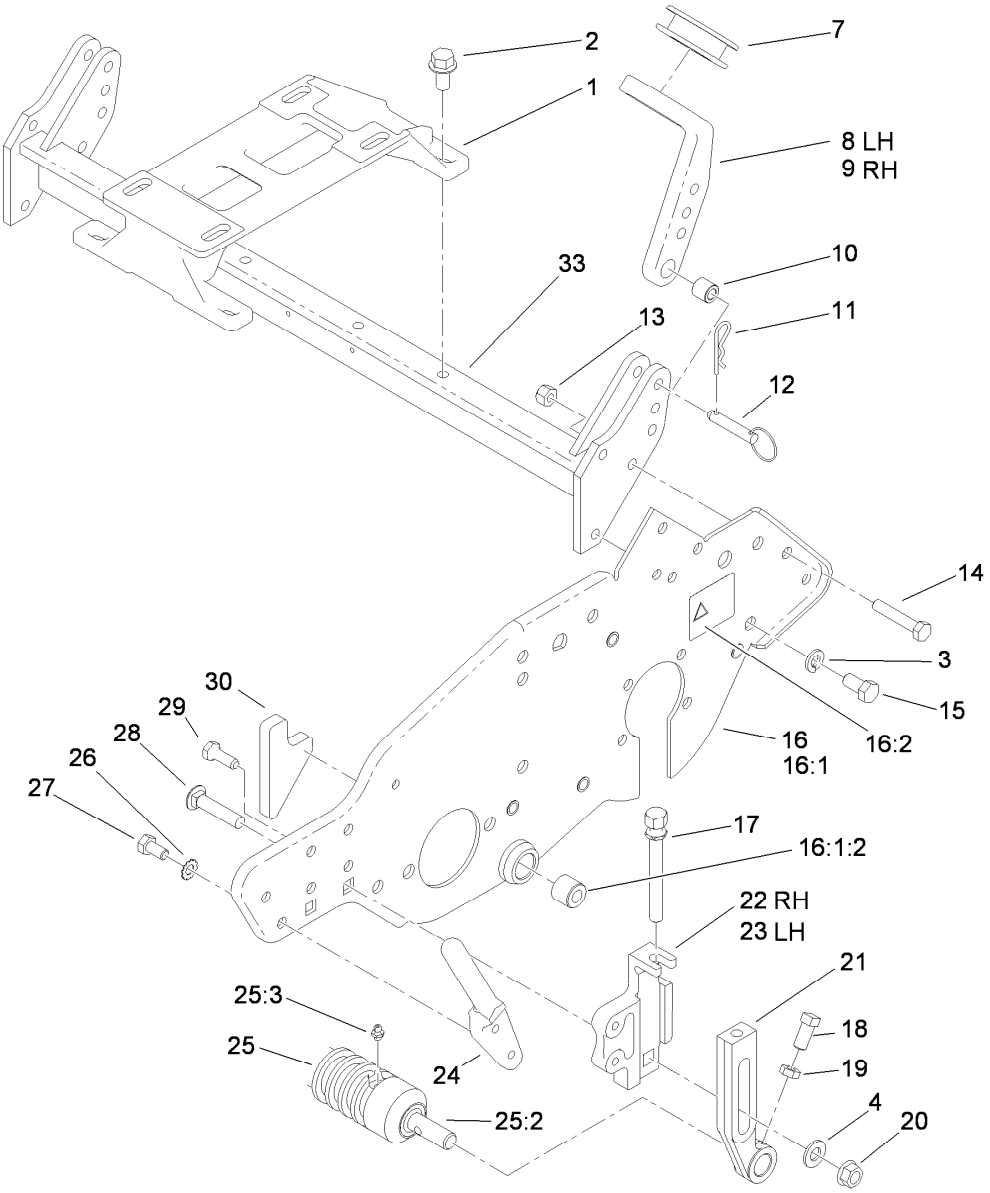

Engine Mount And Frame Assembly

Ref.	Part Number	Qty.	Description
1	88-7670	1	Mount-Engine
2	3234-1	4	Screw-HHF
3	3253-21	4	Washer-Lock
4	3256-24	2	Washer-Flat
7	65-7510	2	Grommet-Handle
8	93-6038	1	Arm-Support, Handle (LH)
9	93-6037	1	Arm-Support, Handle (RH)
10	93-6024	2	Bushing-Support, Handle
11	3290-467	2	Pin-Hair
12	93-6029	2	Pin-Clevis, Ring
13	3296-29	2	Nut-Lock, NI
14	322-9	2	Screw-HH
15	323-4	2	Screw-HH
16	93-6094	1	LH Side Plate ASM
16:1		1	LH Sideplate/Bushing ASM ●
16:1:2	63-9510	1	Bushing
16:2	93-9356	1	Decal-Warning, Belt
16:2	93-9389	1	Decal-Warning, Belt (Japan)

Ref.	Part Number	Qty.	Description
17	93-6051	2	Screw-HOC
18	3242-4	2	Screw-Set, SQH
19	3218-2	2	Nut-Jam
20	32128-21	2	Nut-HF
21	93-6090	2	Arm-HOC
22	93-6048	1	Bracket-HOC, RH
23	93-6049	1	Bracket-HOC, LH
24	65-8570	2	Rod-Mounting
25	99-6241	1	Wiehle Roller ASM (.20 Inch Spacing)
25:2	52-3180	2	Bearing-Roller, Front
25:3	302-5	2	Fitting-Grease
26	3255-8	4	Washer-Lock
27	322-2	4	Screw-HH
28	3231-5	2	Screw-CARR
29	92-8914	4	Bolt-Face, Tapered
30	93-6064	1	Seal-Catcher, Grass
33	93-6025-01	1	Tube-Frame, Rear

● Not serviced separately

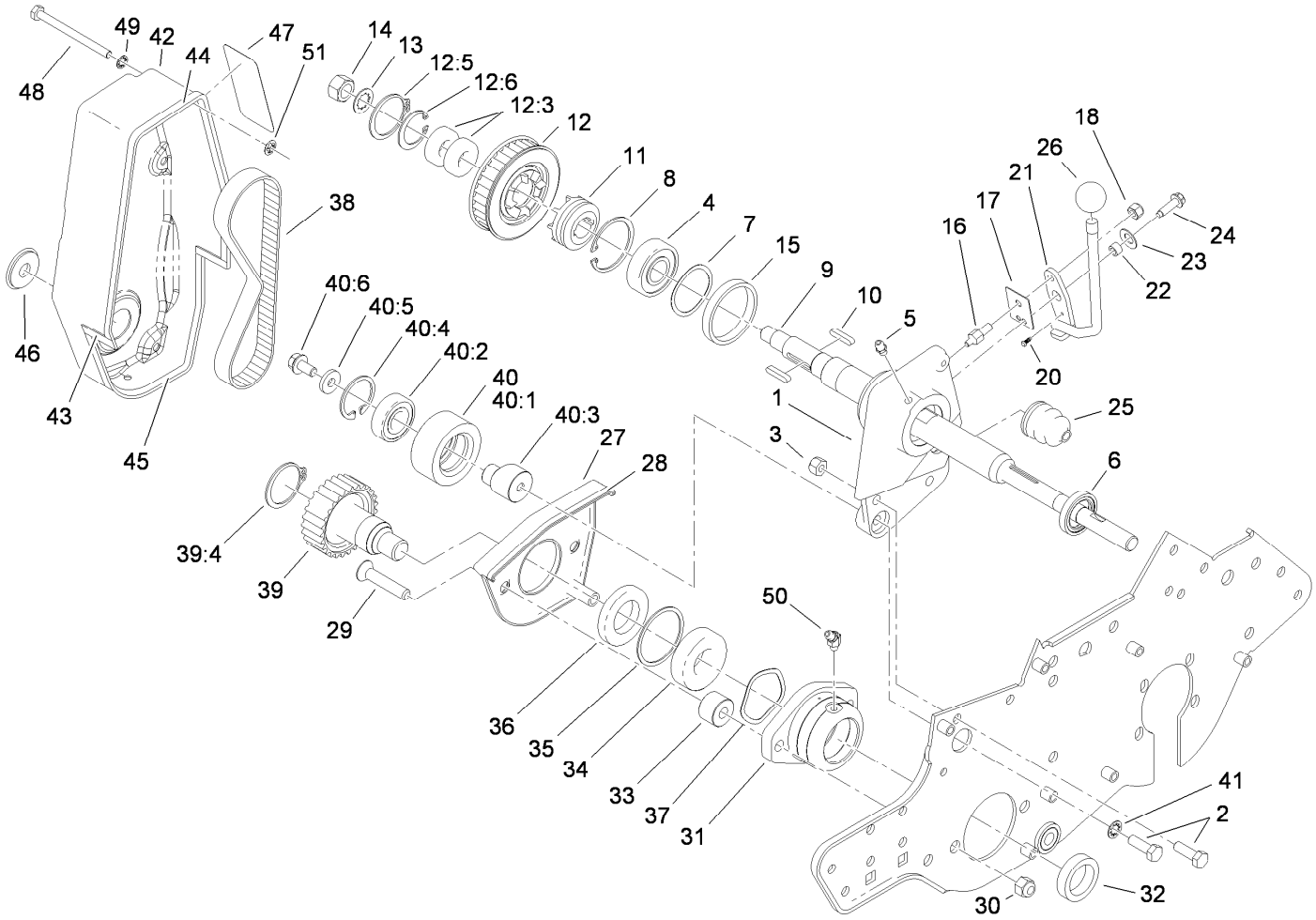

Reel Drive Assembly

Ref.	Part Number	Qty.	Description
1	92-8013	1	Housing-Clutch
2	322-5	3	Screw-HH
3	3296-29	2	Nut-Lock, NI
4	251-318	1	Bearing-Ball
5	302-5	1	Fitting-Grease
6	253-118	1	Seal-Oil
7	88-7720	1	Spring-Wave
8	32151-75	1	Ring-Retaining
9	93-6056	1	Shaft-Power
10	88-7150	2	Key
11	65-6940	1	Clutch-Slider, Jaw
12	88-7830	1	Clutch And Pulley ASM
12:3	251-336	2	Bearing-Ball
12:5	32151-95	1	Ring-Retaining
12:6	32151-89	1	Ring-Retaining, Bowed
13	3254-4	1	Washer-Lock/Int
14	3219-5	1	Nut-Hex
15	65-6970	1	Seal-Felt
16	93-9014	1	Pin-Clutch, Actuator
17	65-6290	1	Spring-Detent, Clutch
18	3296-42	1	Nut-Lock, NI

Ref.	Part Number	Qty.	Description
20	95-5731	1	Screw-Drive
21	88-7170	1	Lever-Clutch
22	88-7860	1	Spacer
23	3290-414	1	Washer-Belleville
24	80-0700	1	Screw-HH, Torx
25	65-8960	1	Boot-Clutch
26	233-69	1	Knob
27	65-7190-01	1	Cover-Arm
28	65-7131	1	Seal-Cover, Strip
29	3289-23	2	Capscrew
30	3296-39	2	Nut-Lock, NI
31	65-8640	1	Housing-Bearing
32	253-96	1	Seal-Oil
33	65-8290	2	Standoff-Cover
34	251-342	1	Bearing-Ball
35	32151-92	1	Ring-Retaining
36	253-163	1	Seal
37	3290-485	1	Washer-Wave
38	65-6200	1	Belt
39	88-7840	1	Pulley And Drive ASM
39:4	32151-95	1	Ring-Retaining

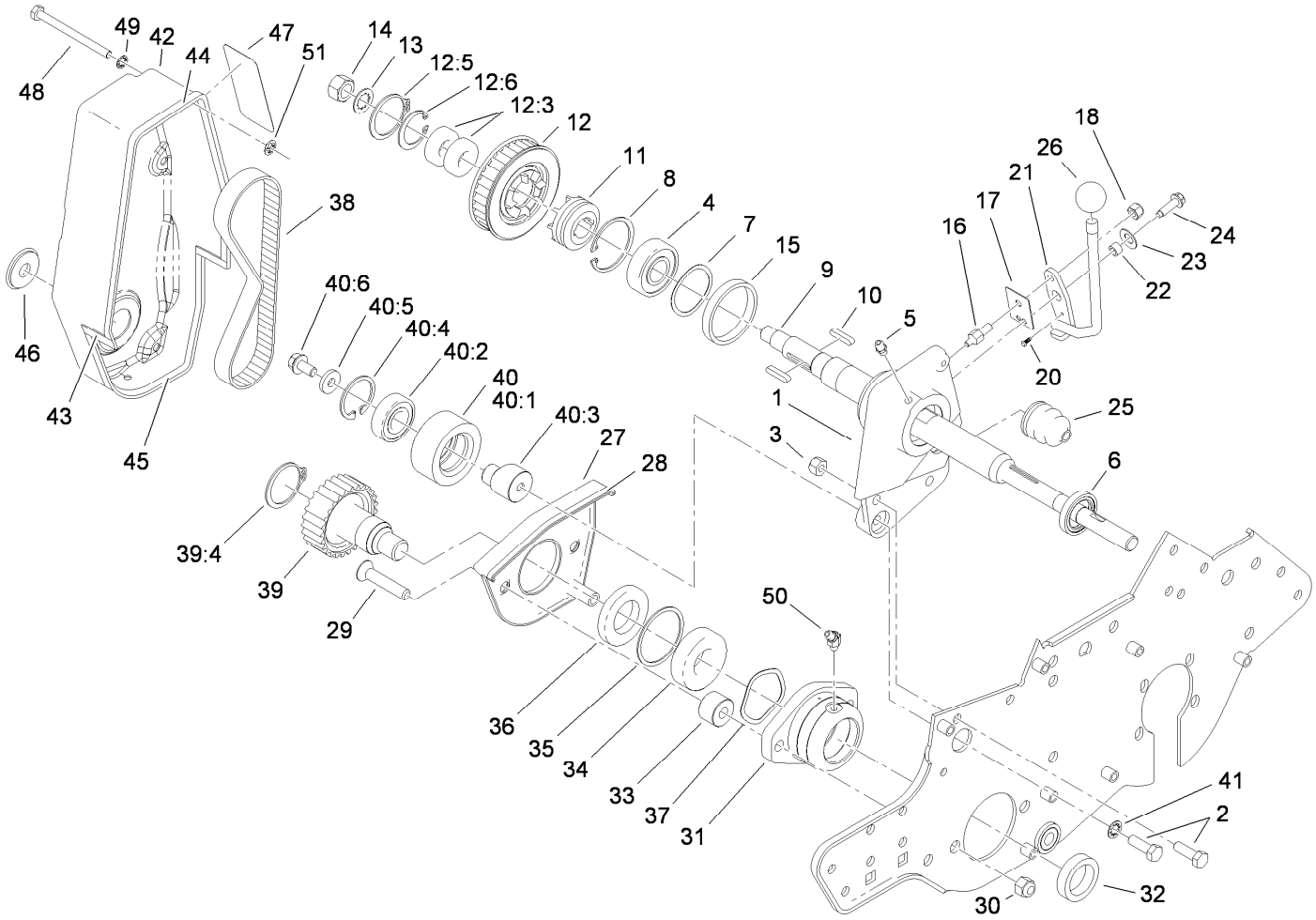

Reel Drive Assembly (continued)

Ref.	Part Number	Qty.	Description
40	88-7850	1	Idler Pulley ASM
40:1	88-7180	1	Pulley-Idler
40:2	38-7820	1	Bearing-Ball
40:3	88-7190	1	Spacer
40:4	32120-42	1	Ring-Retaining
40:5	88-7200	1	Washer-Flat
40:6	3234-14	1	Screw-HHF
41	3254-2	1	Washer-Lock, Internal
42	88-7700-01	1	Cover-Drive, Reel
43	88-7770	2	Strip-Seal, Front

Ref.	Part Number	Qty.	Description
44	88-7790	1	Strip-Seal, Upper
45	88-7800	1	Strip-Seal, Lower
46	237-160	1	Plug-Rubber
47	92-4817	1	Decal-Engagement, Reel (Japan)
47	93-7346	1	Decal-Engagement, Reel
48	321-20	4	Screw-HH
49	3254-8	4	Washer-Lock
50	302-11	1	Fitting-Lube, 45 DEG
51	106-8737	4	Nut-Retainer

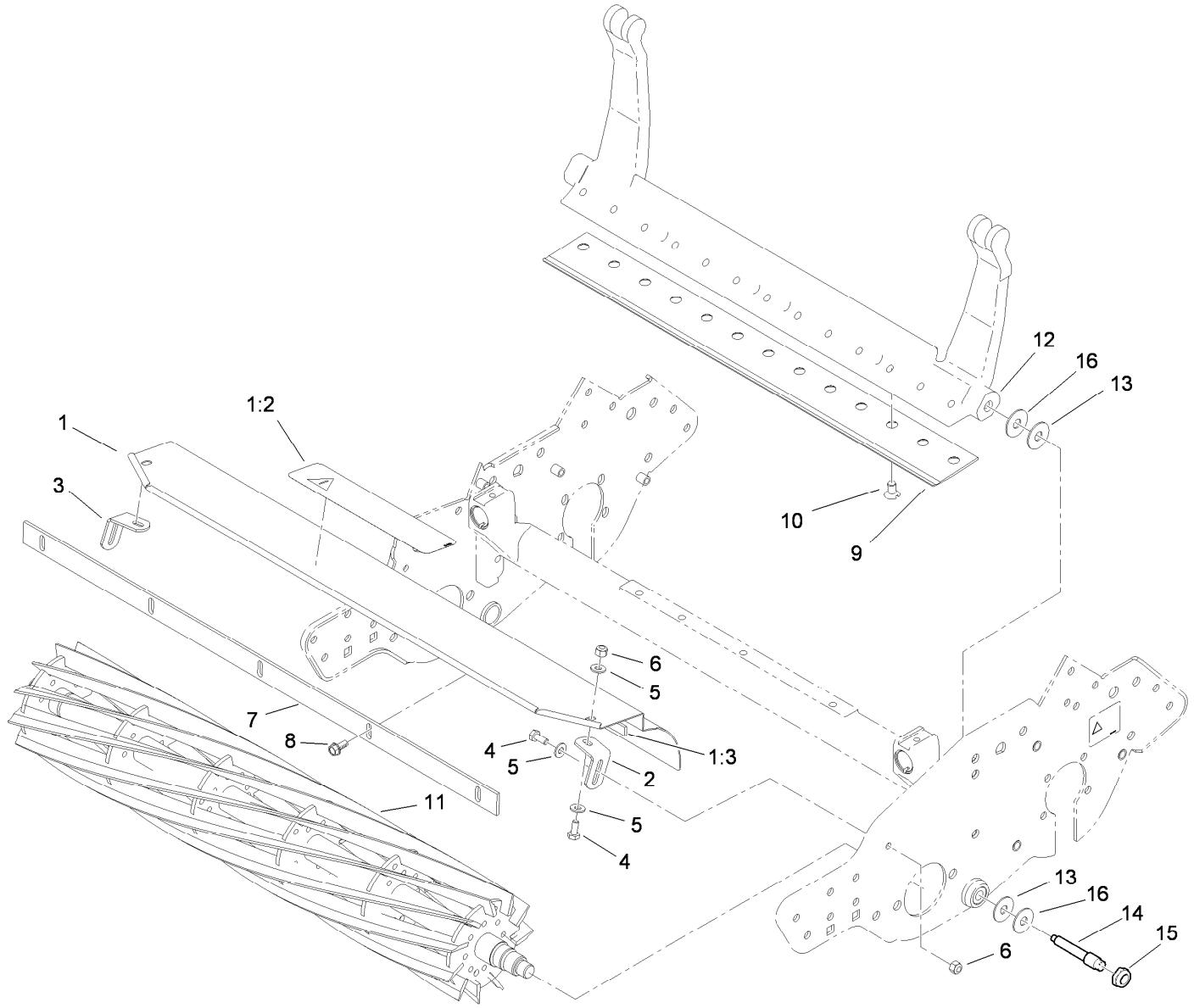

Reel Assembly

Ref.	Part Number	Qty.	Description
1	112-9471	1	Grass Shield ASM
1:2	84-6560	1	Decal-Warning (Japan)
1:2	93-8064	1	Decal-Danger, Ce
1:3	106-2619	1	Strip-Seal
2	65-6450	1	Bracket-LH
3	65-6460	1	Bracket-RH
4	321-3	4	Screw-HH
5	3256-22	6	Washer-Flat
6	3296-42	4	Nut-Lock, NI
7	36-7260	1	Bar-Off, Cut
8	104-2065	5	Screw-HWH
9	93-4263	1	Bedknife-Tournament Cut
10	57-4910	13	Screw-Special
11	93-6097	1	11 Blade Reel ASM
12	112-9281-01	1	Bedbar-Standard
13	52-2900	4	Washer-Plastic
14	117-9493	2	Bolt-Bedbar
15	3296-28	2	Nut-Lock, NI
16	52-2860	4	Washer

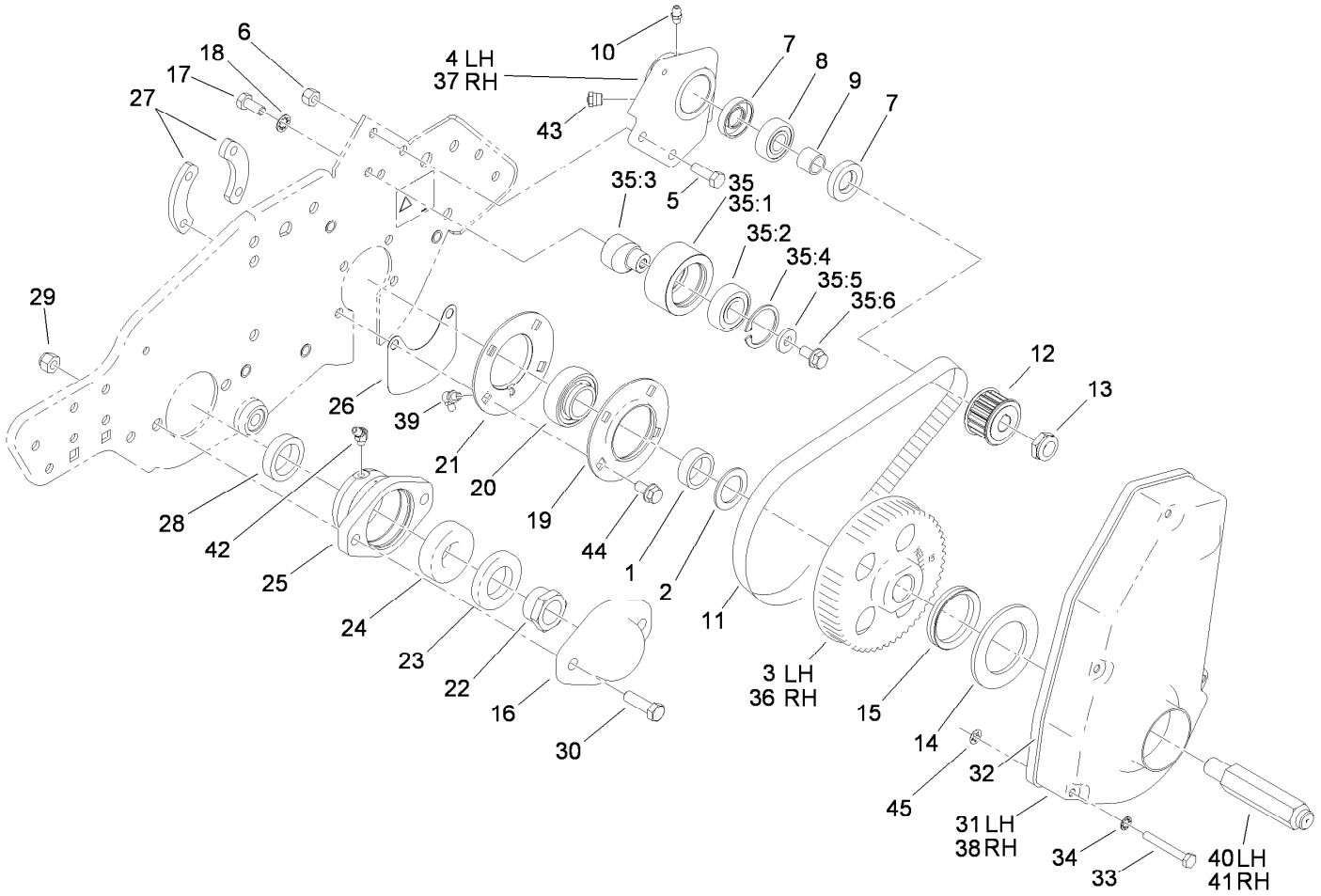

Drum Drive Assembly

Ref.	Part Number	Qty.	Description
1	88-7530	2	Spacer
2	88-7540	2	Washer-Backup
3	105-5365	1	Pulley-Drum, LH
4	108-9414	1	Housing-Support, Differential (LH)
5	322-5	4	Screw-HH
6	3296-29	4	Nut-Lock, NI
7	253-160	4	Seal-Grease
8	251-338	2	Bearing-Ball
9	86-7130	2	Spacer-Pulley
10	302-5	2	Fitting-Grease
11	65-6210	2	Belt
12	65-6660	2	Pulley
13	3296-57	2	Nut-Lock, NI
14	94-9018	2	Washer-Plastic
15	253-161	2	Seal-V-Ring
16	65-6220-01	1	Cover-End, Reel
17	322-3	2	Screw-HH
18	3254-2	2	Washer-Lock, Internal
19	65-6590	2	Flangette-Bearing
20	88-7880	2	Bearing

Ref.	Part Number	Qty.	Description
21	95-0923	2	Flangette
22	92-7302	1	Nut-Bearing, Lock
23	253-163	1	Seal
24	251-342	1	Bearing-Ball
25	65-8640	1	Housing-Bearing
26	65-8720	2	Closure-Plate, Side
27	65-8730	4	Clamp-Bearing
28	253-96	1	Seal-Oil
29	3296-39	2	Nut-Lock, NI
30	323-7	2	Screw-HH
31	88-7680-01	1	Cover-Belt Drum, LH
32	88-7810	2	Seal-Strip, Drum Cover
33	321-11	8	Screw-HH
34	3254-8	8	Washer-Lock
35	88-7850	2	Idler Pulley ASM
35:1	88-7180	1	Pulley-Idler
35:2	38-7820	1	Bearing-Ball
35:3	88-7190	1	Spacer
35:4	32120-42	1	Ring-Retaining
35:5	88-7200	1	Washer-Flat
35:6	3234-14	1	Screw-HHF

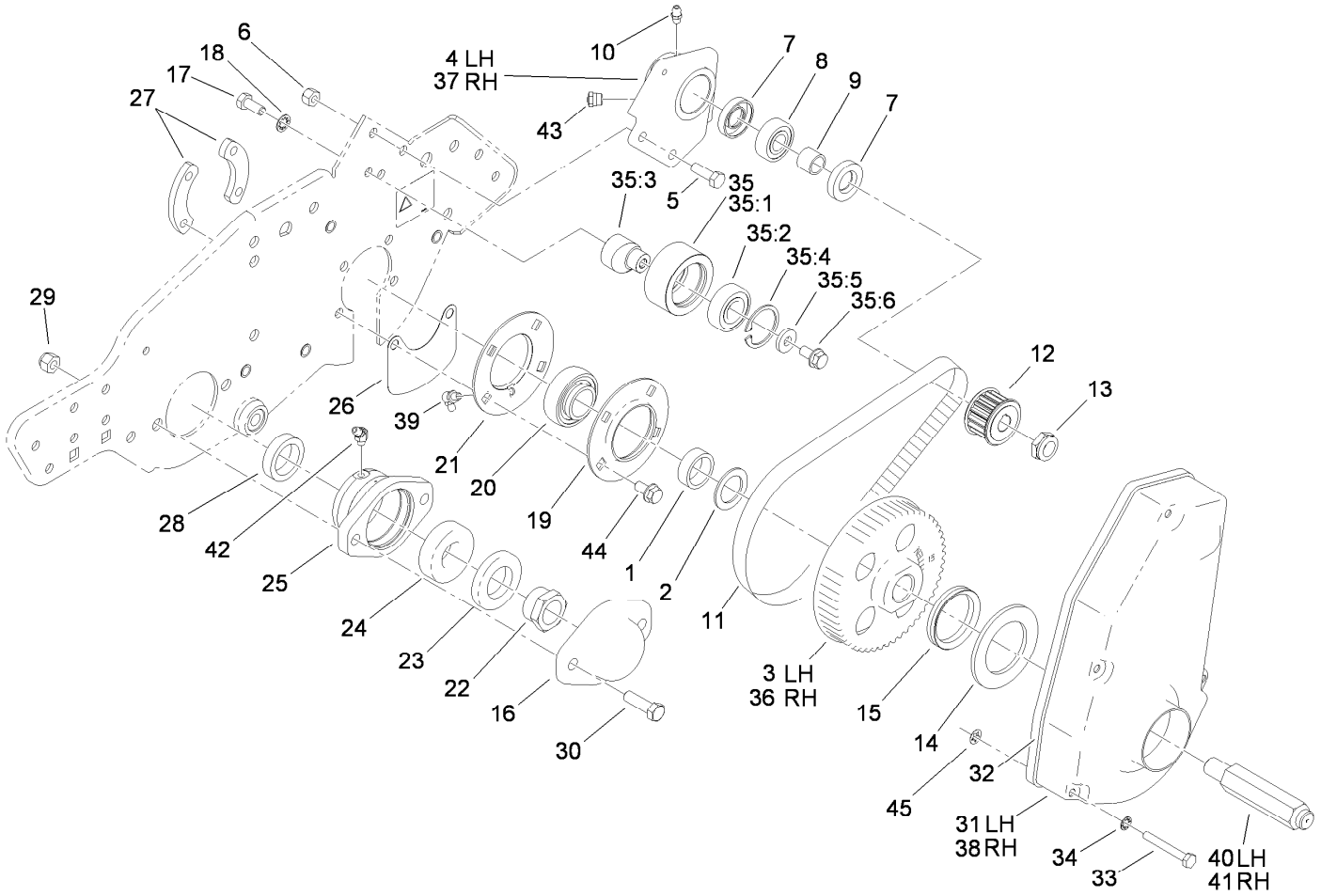

Drum Drive Assembly (continued)

Ref.	Part Number	Qty.	Description
36	105-5364	1	Pulley-Drum, RH
37	108-9416	1	Housing-Support, Differential (RH)
38	88-7690-01	1	Cover-Drum, Belt (RH)
39	104-1843	2	Fitting-Grease, 90 DEG
40	88-7580	1	Shaft-Wheel, Transport (LH)
41	88-7590	1	Shaft-Wheel, Transport (RH)
42	302-11	1	Fitting-Lube, 45 DEG
43	302-34	2	Fitting-Lube
44	3234-14	8	Screw-HHF
45	106-8737	8	Nut-Retainer

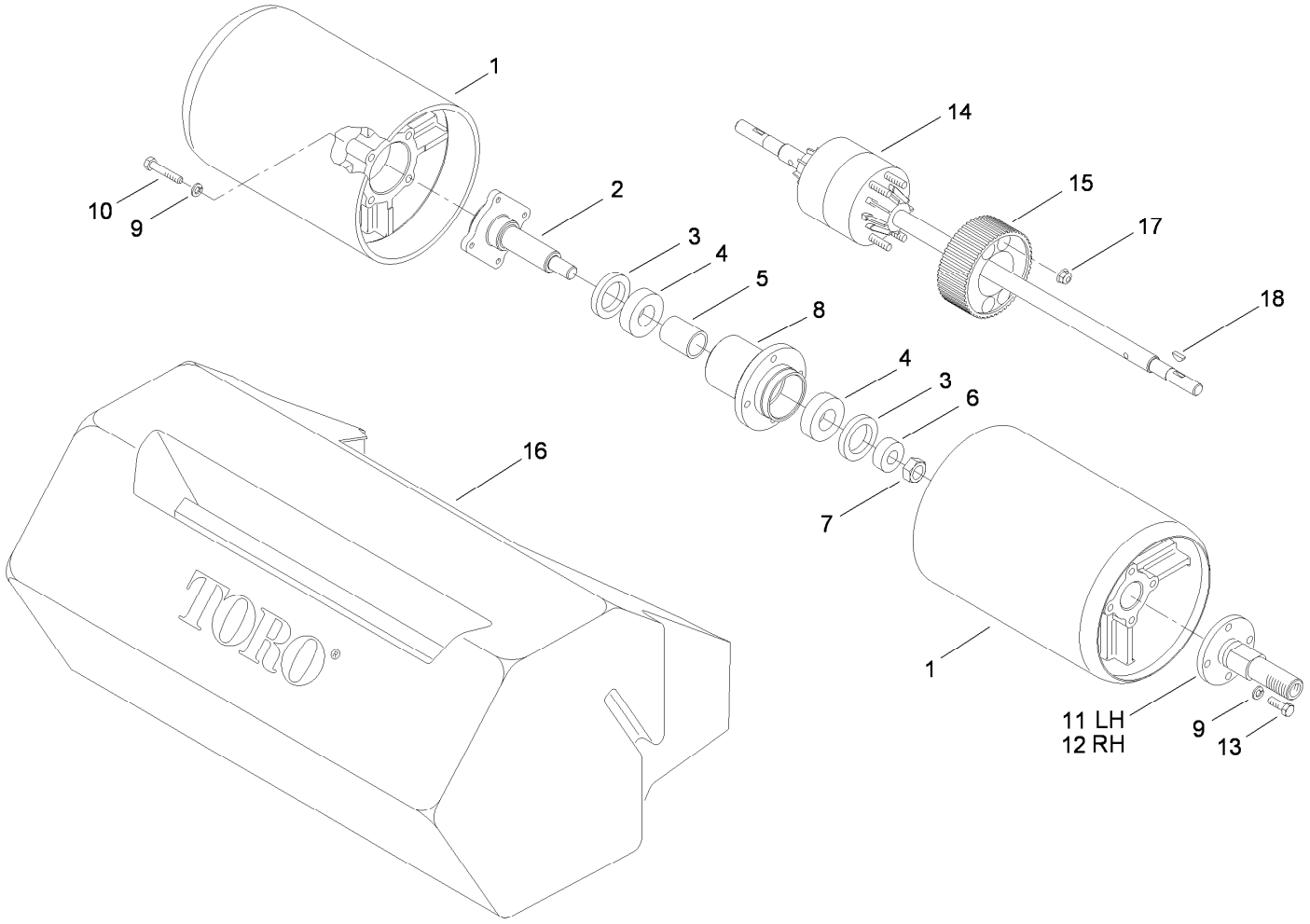

Drum and Basket Assembly

Ref.	Part Number	Qty.	Description
1	93-9047	2	Drum
2	94-5850	1	Spindle-Drum
3	253-159	2	Seal
4	251-82	2	Bearing-Ball
5	65-6520	1	Spacer
6	65-6530	1	Spacer
7	3296-33	1	Nut-Lock, NI
8	94-5852	1	Hub-Drum
9	3253-4	16	Washer-Lock
10	322-9	8	Screw-HH
11	88-7520	1	Shaft-Extension, Drum (LH)
12	88-7510	1	Shaft-Extension, Drum (RH)
13	322-5	8	Screw-HH
14	93-6055	1	Differential ASM
15	65-9120	1	Pulley-Housing, Differential
16	65-7230	1	Basket-Grass
17	104-8300	4	Nut-Flange, NI
18	3257-30	2	Key-Woodruff

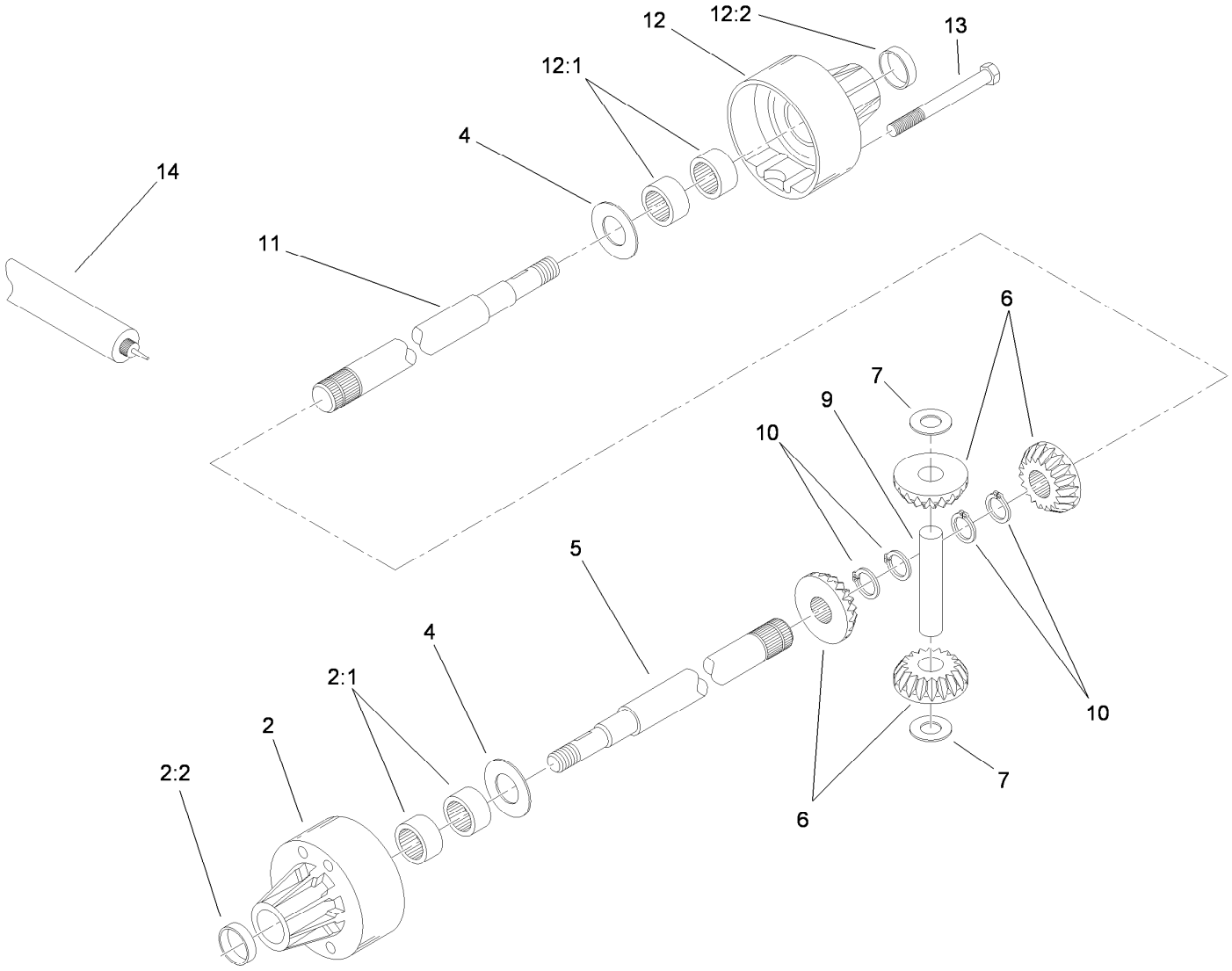

Differential Assembly No. 93-6055

Ref.	*Part Number*	*Qty.*	*Description*
2	95-5741	1	Carrier-Differential
2:1	95-5738	4	Bearing-Needle
2:2	95-5737	2	Seal-Oil
4	95-5745	4	Washer
5	95-5736	1	Axle (Long)
6	104-0503	1	Gear Set-Differential
7	95-5744	2	Washer-Flat
9	95-5747	1	Pin-Drive
10	95-5746	4	Ring-Retaining
11	95-5735	1	Axle (Short)
12	95-5740	1	Carrier-Differential
12:1	95-5738	4	Bearing-Needle
12:2	95-5737	2	Seal-Oil
13	95-5739	4	Screw
14	95-5734	1	Grease

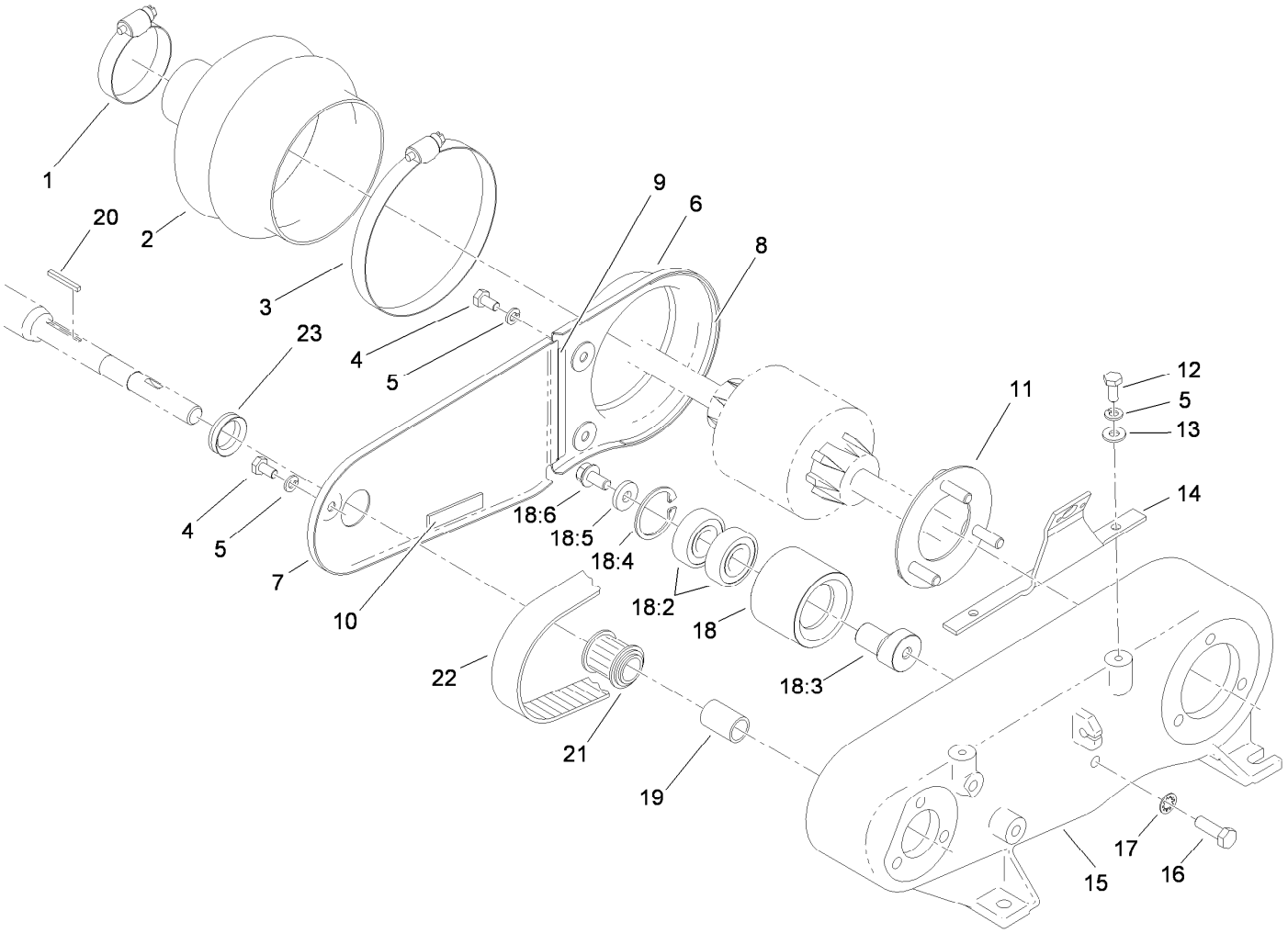

Inner Countershaft Assembly

Ref.	*Part Number*	*Qty.*	*Description*
1	2412-139	1	Clamp-Hose
2	65-6800	1	Boot-Differential
3	2412-140	1	Clamp-Hose
4	321-2	3	Screw-HH
5	3253-3	5	Washer-Lock
6	88-7250-03	1	Cover-Box, Rear
7	88-7240-03	1	Cover-Box, Front
8	65-6902	1	Strip-Seal, Cover
9	65-6903	1	Strip-Seal, Cover
10	65-6901	1	Strip-Seal, Cover
11	65-6720	1	Plate-Screw
12	321-3	2	Screw-HH
13	3256-22	2	Washer-Flat
14	93-1448	1	Bracket Cover ASM

Ref.	*Part Number*	*Qty.*	*Description*
15	88-7230	1	Housing-Shaft, Counter
16	322-5	1	Screw-HH
17	3254-2	1	Washer-Lock, Internal
18	88-7870	1	Idler Pulley ASM
18:2	38-7820	2	Bearing-Ball
18:3	88-7380	1	Spacer-Pulley
18:4	32120-42	1	Ring-Retaining
18:5	88-7200	1	Washer-Flat
18:6	3234-14	1	Screw-HHF
19	86-7140	1	Spacer
20	65-6850	1	Key-Square
21	65-8910	1	Pulley-Countershaft
22	65-9080	1	Belt
23	88-7710	1	Seal-V-Ring

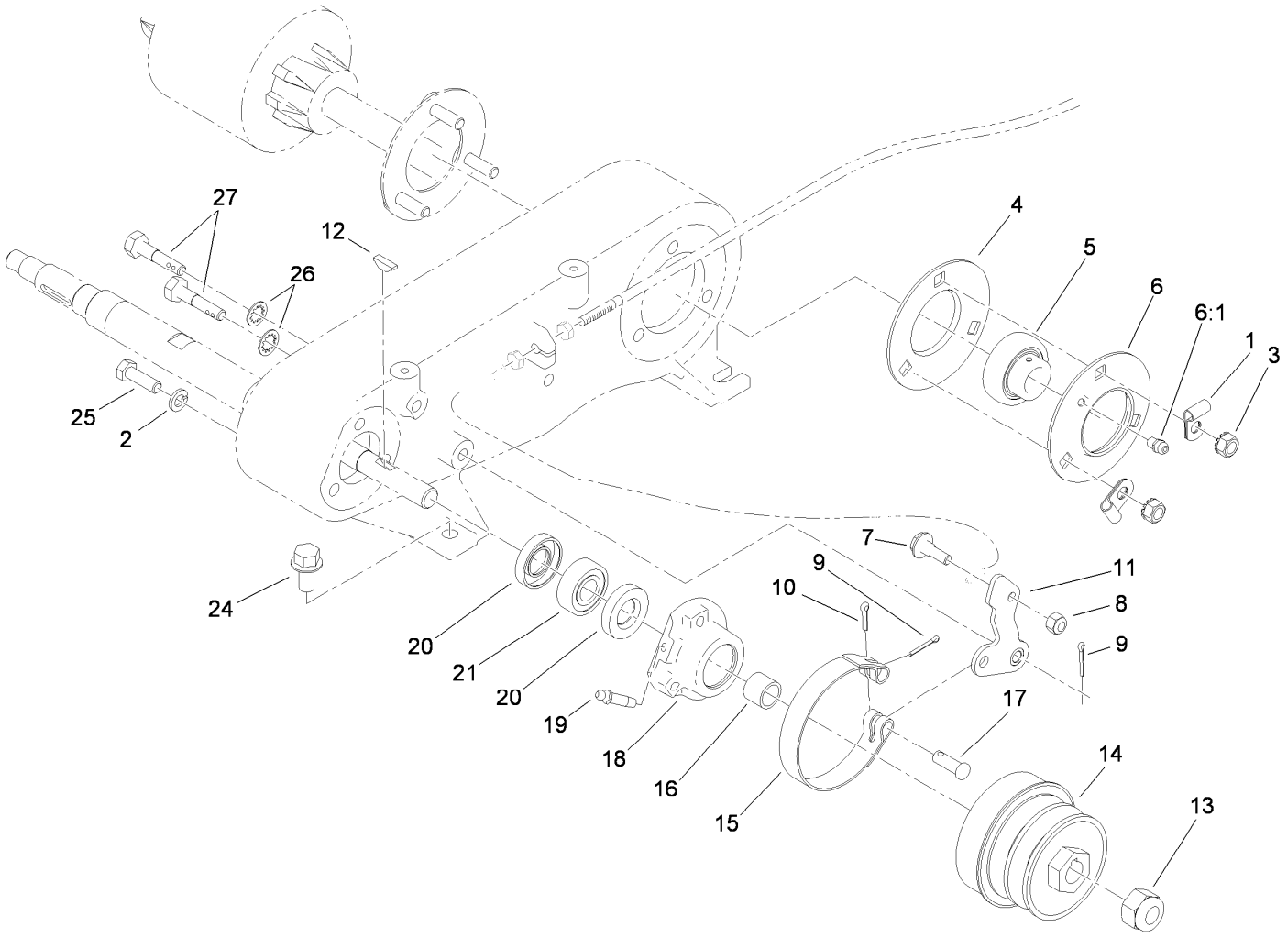

Outer Crankshaft Assembly

Ref.	Part Number	Qty.	Description
1	88-7970	2	Clip
2	3253-4	3	Washer-Lock
3	32149-1	3	Nut-Keps
4	65-6710	1	Flangette-Bearing
5	108-7663	1	Bearing-Race, Extended
6	65-6700	1	Flangette-Lube
6:1	302-55	1	Fitting-Grease
7	11-9030	1	Screw-Shoulder
8	3296-42	1	Nut-Lock, NI
9	3272-6	2	Pin-Cotter
10	3272-8	1	Pin-Cotter
11	117-1433	1	Lower Brake Lever ASM
12	3257-30	1	Key-Woodruff

Ref.	Part Number	Qty.	Description
13	3296-63	1	Nut-Lock, NI
14	92-9212	1	Pulley-Shaft, Input
15	65-8700	1	Band-Brake
16	86-7130	1	Spacer-Pulley
17	283-75	1	Pin-Clevis
18	65-6760	1	Housing-Bearing
19	302-64	1	Fitting-Grease
20	253-160	2	Seal-Grease
21	251-338	1	Bearing-Ball
24	3234-1	4	Screw-HHF
25	322-5	3	Screw-HH
26	3254-6	2	Washer-Lock, Internal
27	117-1430	2	Bolt-Mount, Brake

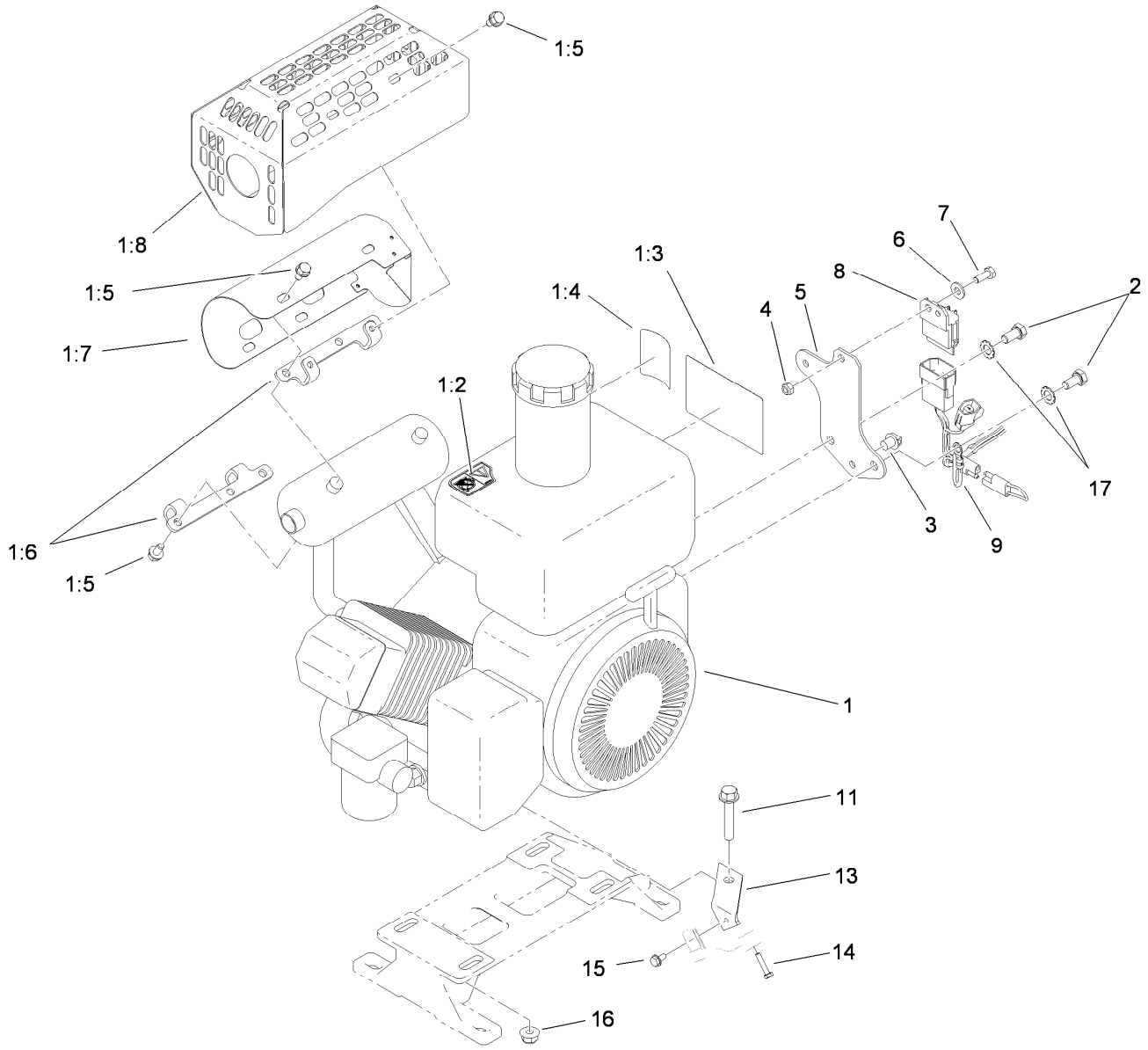

Engine Assembly

Ref.	Part Number	Qty.	Description
1	115-1066	1	Engine ASM
1:2	115-1615	1	Decal-Surface, Hot
1:3	115-1613	1	Decal-Danger
1:4	93-9886	1	Decal-Fuel
1:5	104-2628	8	Screw-HWH
1:6	104-9771	2	Bracket-Guard, Muffler
1:7	110-7359	1	Muffler Shield ASM
1:8	110-7361-03	1	Guard-Muffler
2	33114-016	2	Screw-HH
3	32180-030	1	Clip-Harness
4	33023-00	1	Nut-Lock

Ref.	Part Number	Qty.	Description
5	117-1365-03	1	Plate-Harness, Wire
6	3256-22	1	Washer-Flat
7	33113-016	1	Screw-HH
8	1-323430	1	Module-Interlock
9	115-1610	1	Harness-Wire
11	94-5780	4	Screw-HWH
13	88-7960	1	Bracket-Cable, Throttle
14	94-9015	1	Screw-HH
15	104-2065	1	Screw-HWH
16	104-8300	4	Nut-Flange, NI
17	3255-9	2	Washer-Lock

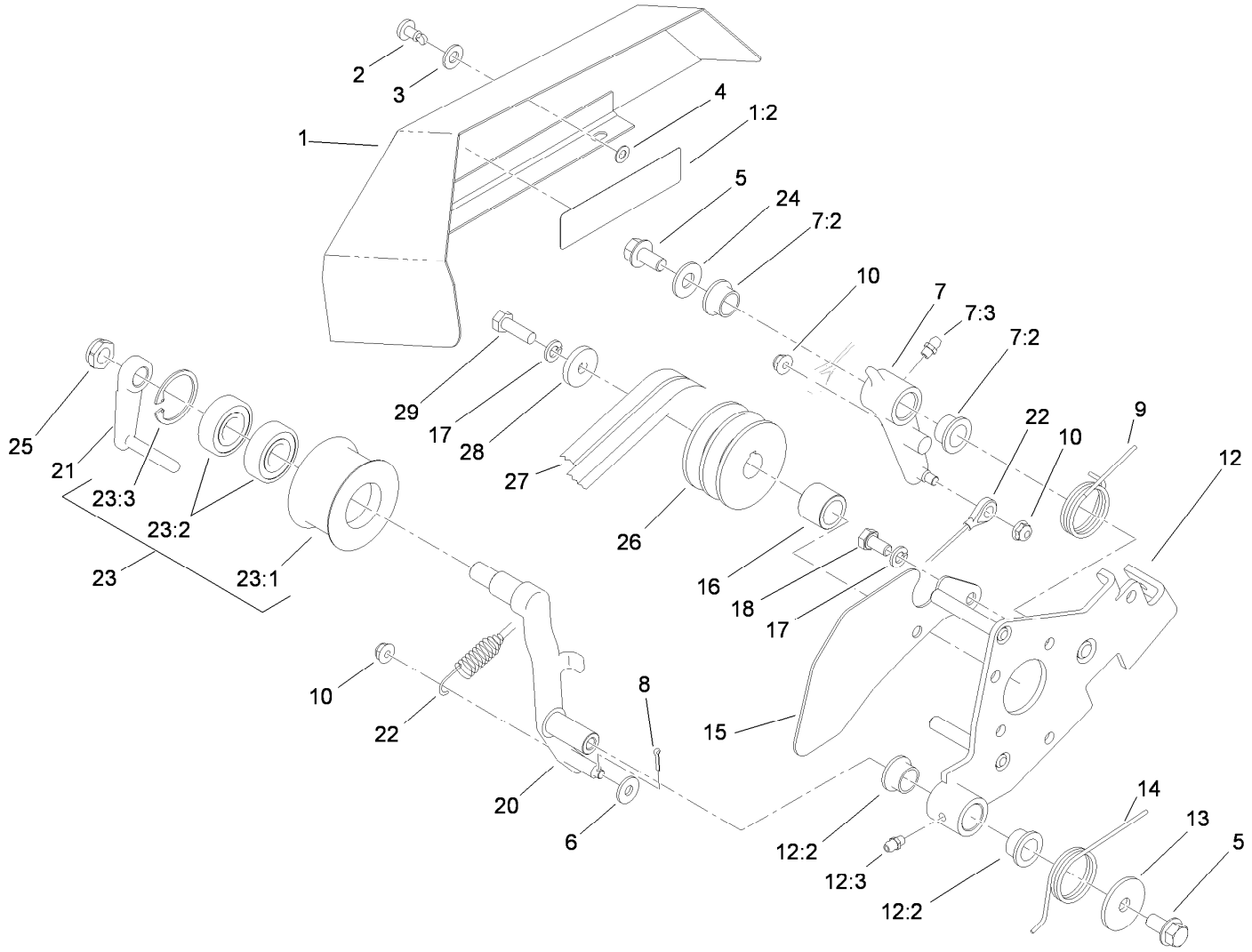

Bellcrank Assembly

Ref.	Part Number	Qty.	Description
1	94-9007	1	Bellcrank Cover ASM
1:2	84-7280	1	Decal-Danger, Japan
1:2	93-7273	1	Decal-Danger
2	93-6074	1	Stud
3	3256-70	1	Washer-Flat
4	93-6073	1	Washer-Nylon
5	110-1718	2	Screw-HHF
6	3256-78	1	Washer-Flat
7	112-9388	1	Traction Lever ASM
7:2	65-8770	2	Bushing-Bellcrank
7:3	302-5	1	Fitting-Grease
8	3272-5	1	Pin-Cotter
9	93-6011	1	Spring-Torsion
10	104-7201	3	Nut-HF
12	112-9398	1	Clutch Bracket ASM
12:2	65-8770	2	Bushing-Bellcrank
12:3	302-5	1	Fitting-Grease
13	93-6099	1	Washer

Ref.	Part Number	Qty.	Description
14	93-6012	1	Spring-Torque, Clutch Lever
15	93-6013-03	1	Shield-Belt
16	65-8260	1	Spacer-Shaft, Engine
17	3253-4	6	Washer-Lock
18	33114-016	5	Screw-HH
20	112-9392	1	Lever-Clutch
21	112-9390	1	Guide-Belt
22	93-9024	1	Cable Link ASM
23	112-9385	1	Idler Pulley ASM
23:1	98-7297	1	Pulley-Idler
23:2	38-7820	2	Bearing-Ball
23:3	32120-42	1	Ring-Retaining
24	3256-4	1	Washer-Flat
25	3296-45	1	Nut-Lock, NI
26	92-9216	1	Pulley-Drive, Input
27	92-9218	1	Belt-V, Matched Set
28	65-8270	1	Washer
29	33114-025	1	Screw-HH

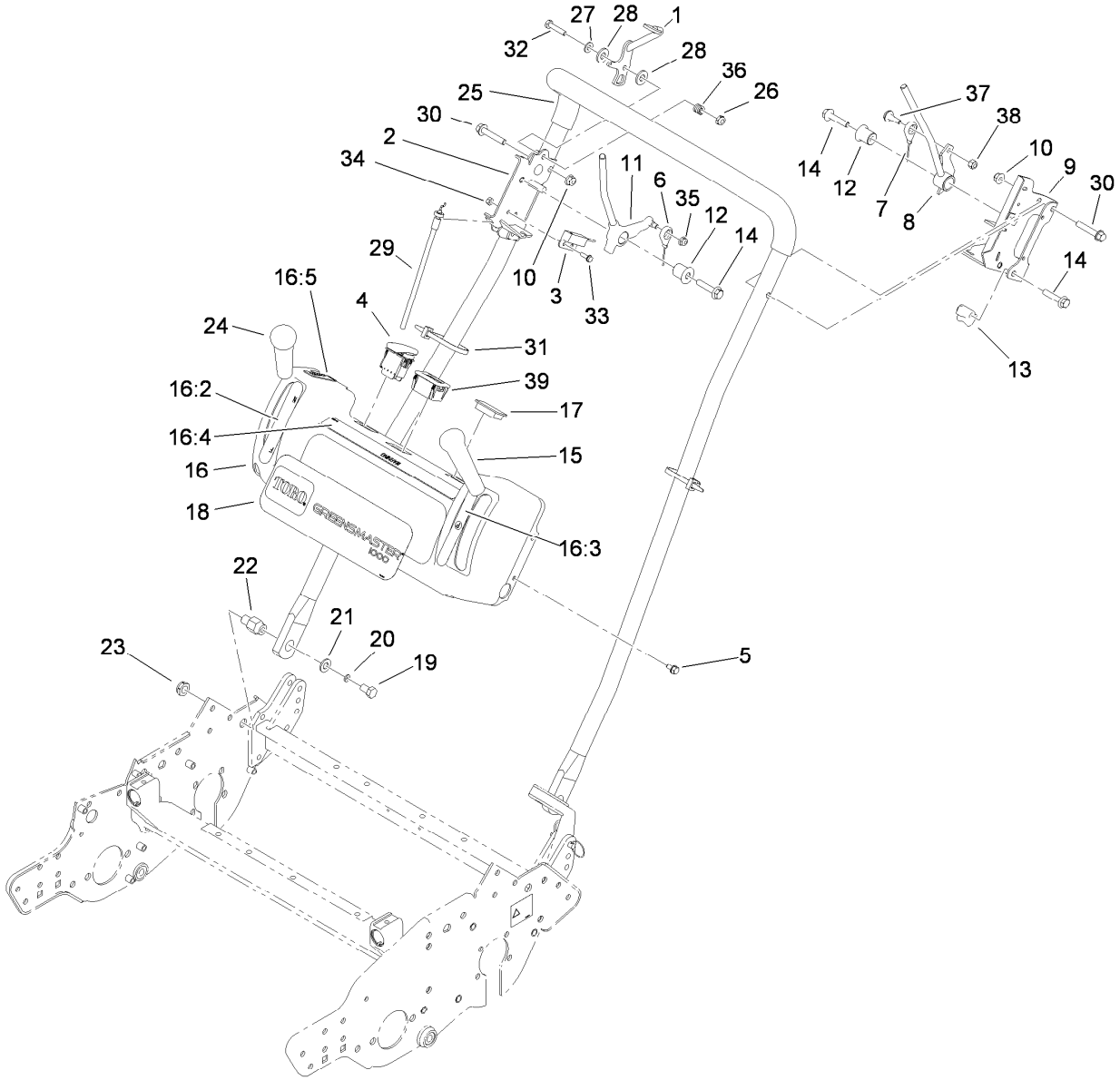

Handle Assembly

Ref.	Part Number	Qty.	Description
1	115-1098	1	Throttle Lever ASM
2	115-1751-03	1	Traction Bracket ASM
3	100-1270	1	Switch-Proximity
4	112-9420	1	Switch-Engine
5	104-2628	4	Screw-HWH
6	94-5870	1	Cable Clutch ASM
7	94-5871	1	Cable Brake ASM
8	115-1677	1	Brake Lever ASM
9	115-1068-03	1	Brake Bracket ASM
10	104-8300	2	Nut-Flange, NI
11	112-9321	1	Lever-Traction
12	112-9317	2	Bushing-Flanged
13	110-2415	2	Clamp-Handle
14	112-9318	4	Screw-HHF W/Lock
15	104-9774	1	Knob-Red
16	115-1124	1	Console ASM
16:2	115-1720	1	Decal-Lever, Traction
16:3	104-2618	1	Decal-Lever, Brake
16:4	115-1614	1	Decal-Warning
16:5	93-6085	1	Decal-Throttle
17	99-7420	1	Plug-Hole

Ref.	Part Number	Qty.	Description
18	115-1130	1	Decal-Console
19	323-34	2	Screw-HH
20	3253-21	2	Washer-Lock
21	3256-24	2	Washer-Flat
22	110-7364	2	Pin-Handle, Pivot
23	3296-28	2	Nut-Lock, NI
24	104-9760	1	Knob-Black
25	112-9478	1	Handle
26	3296-56	1	Nut-Lock, NI
27	3256-22	1	Washer-Flat
28	66-2921	2	Washer-Friction
29	115-1713	1	Cable-Throttle
30	94-5780	2	Screw-HWH
31	3290-378	4	Tie-Cable
32	321-8	1	Screw-HH
33	115-1727	2	Screw-HHF
34	1-804254	2	Nut
35	104-7201	1	Nut-HF
36	3-5787	1	Spring-Compression
37	11-9030	1	Screw-Shoulder

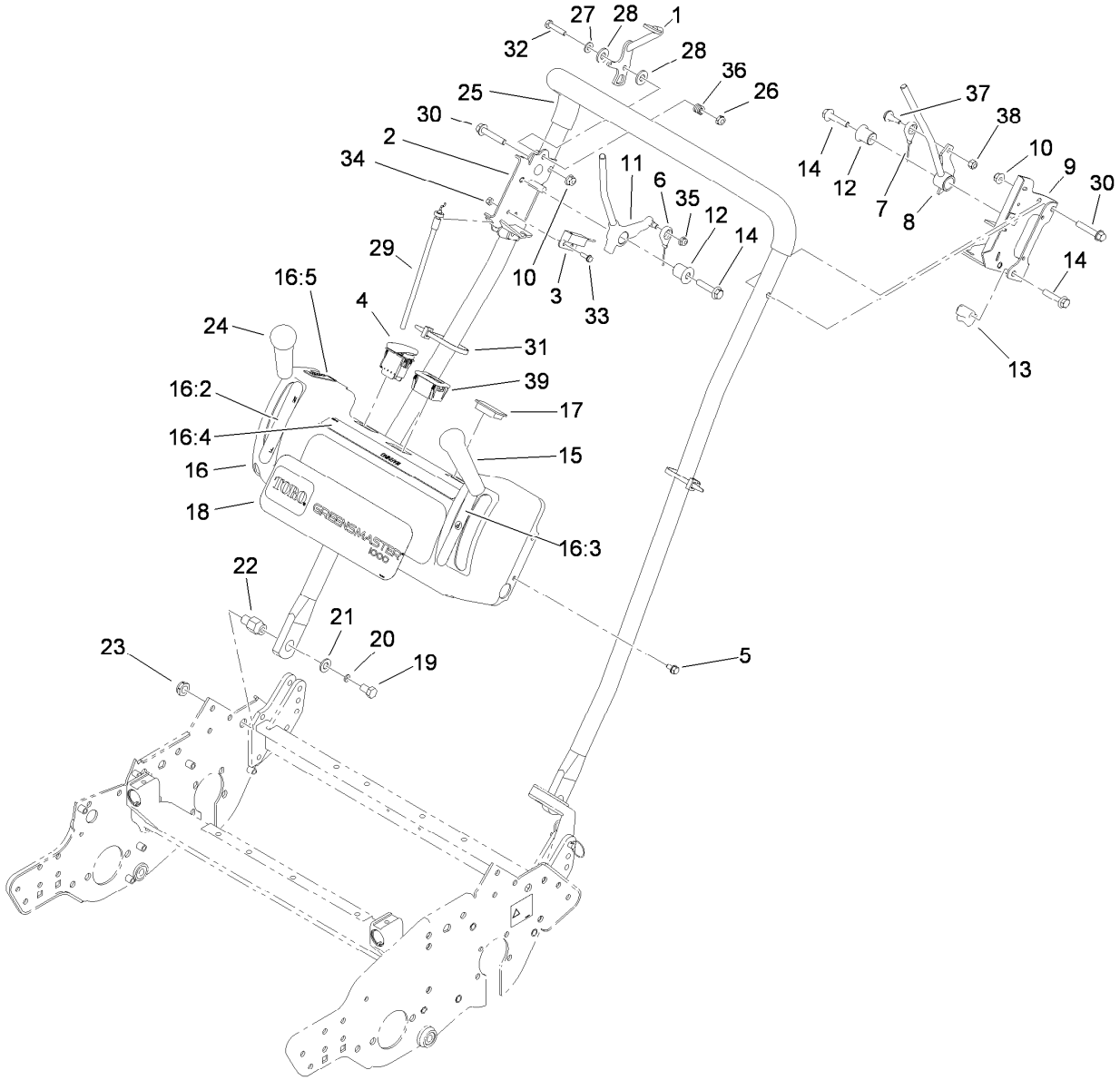

Handle Assembly (continued)

Ref.	*Part Number*	*Qty.*	*Description*
38	3296-42	1	Nut-Lock, NI
39	119-1347	1	Meter-Hour

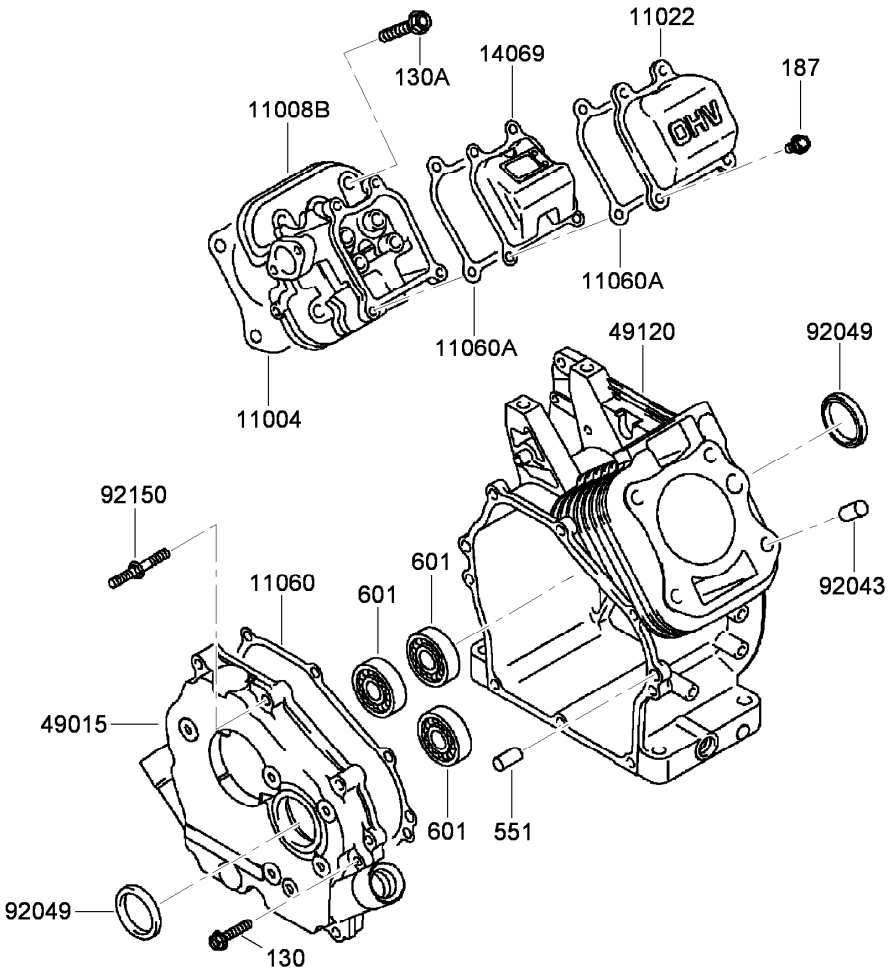

Cylinder and Crankcase Assembly

Ref.	*Part Number*	*Qty.*	*Description*
130	108-2522	4	Bolt-Flanged (6X30)
130A	115-1759	4	Bolt-Flanged (8X45)
187	115-1760	4	Bolt-Upset, Wsp (6X16)
551	93-8516	2	Pin-Dowel (6X12)
601	93-8517	3	Bearing-Ball
11004	93-8504	1	Gasket-Head
11008B	115-1757	1	Head-Cylinder
11022	93-8508	1	Case-Rocker
11060	93-8525	1	Gasket-Cover, Crankcase
11060A	93-8509	2	Gasket-Case, Rocker
14069	93-8510	1	Breather
49015	93-8520	1	Cover-Crankcase
49120	93-8515	1	Crankcase
92043	93-8512	2	Pin
92049	93-8511	2	Seal-Oil
92150	93-8524	1	Stud

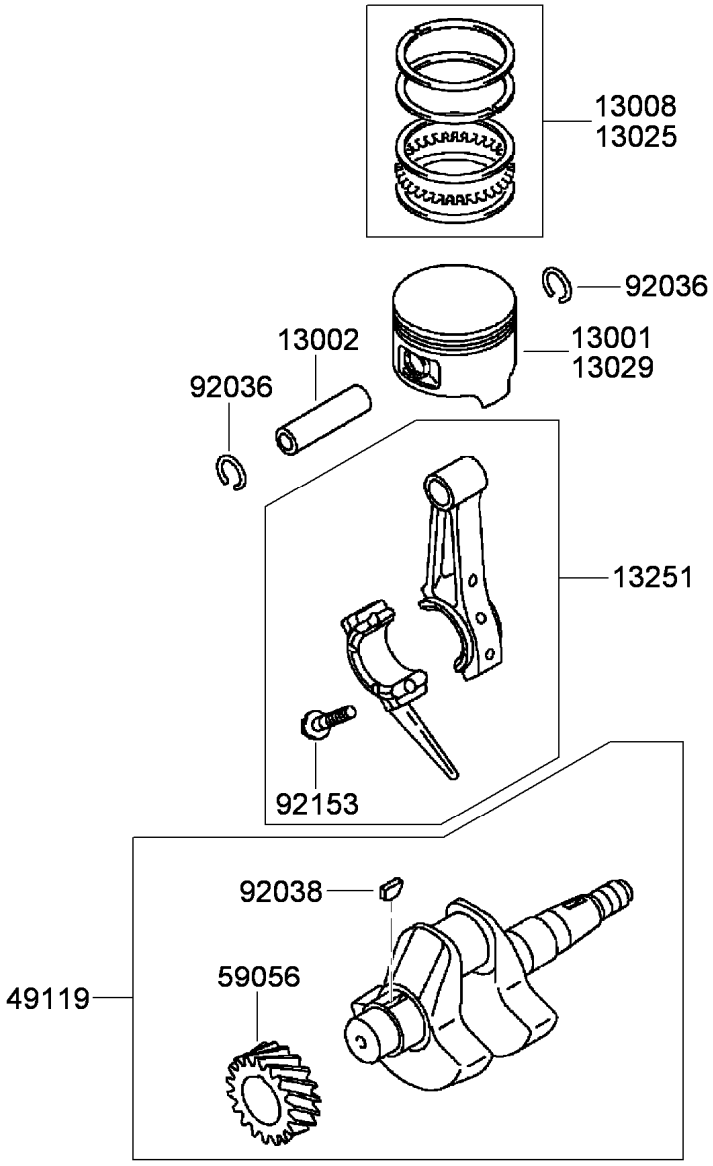

Piston and Crankshaft Assembly

Ref.	*Part Number*	*Qty.*	*Description*
13001	93-8502	1	Piston
13002	93-8501	1	Pin-Piston
13008	93-8503	1	Set-Ring, Piston
13025	94-6837	1	Piston Ring Set (.05Mm)
13029	94-6836	1	Piston (0.5 O S)
13251	93-8528	1	Connecting Rod ASM
49119	93-8518	1	Crankshaft ASM
59056	94-9043	1	Gear-Helical
92036	93-8500	2	Ring-Retaining
92038	93-8698	1	Key
92153	115-1805	2	Bolt (6X30)

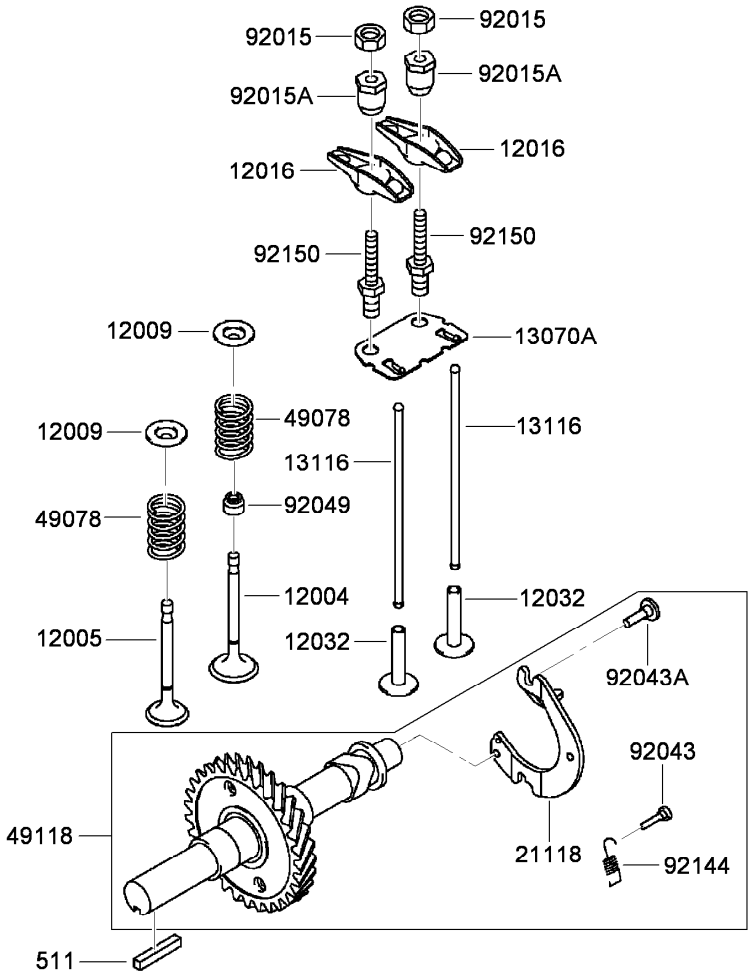

Valve and Camshaft Assembly

Ref.	*Part Number*	*Qty.*	*Description*
511	108-9442	1	Key
12004	93-8532	1	Valve-Intake
12005	93-8529	1	Valve-Exhaust
12009	93-8531	2	Retainer-Spring, Valve
12016	93-8535	2	Arm-Rocker
12032	93-8539	2	Tappet
13070A	115-1758	1	Guide
13116	93-8538	2	Rod-Push
21118	93-8543	1	Decompressor
49078	115-1763	2	Spring-Valve, Engine
49118	93-8544	1	Camshaft ASM
92015	93-8533	2	Nut
92015A	93-8534	2	Nut
92043	93-8542	1	Pin
92043A	93-8540	2	Pin
92049	115-1762	1	Seal-Oil
92144	93-8541	1	Spring
92150	93-8536	2	Bolt

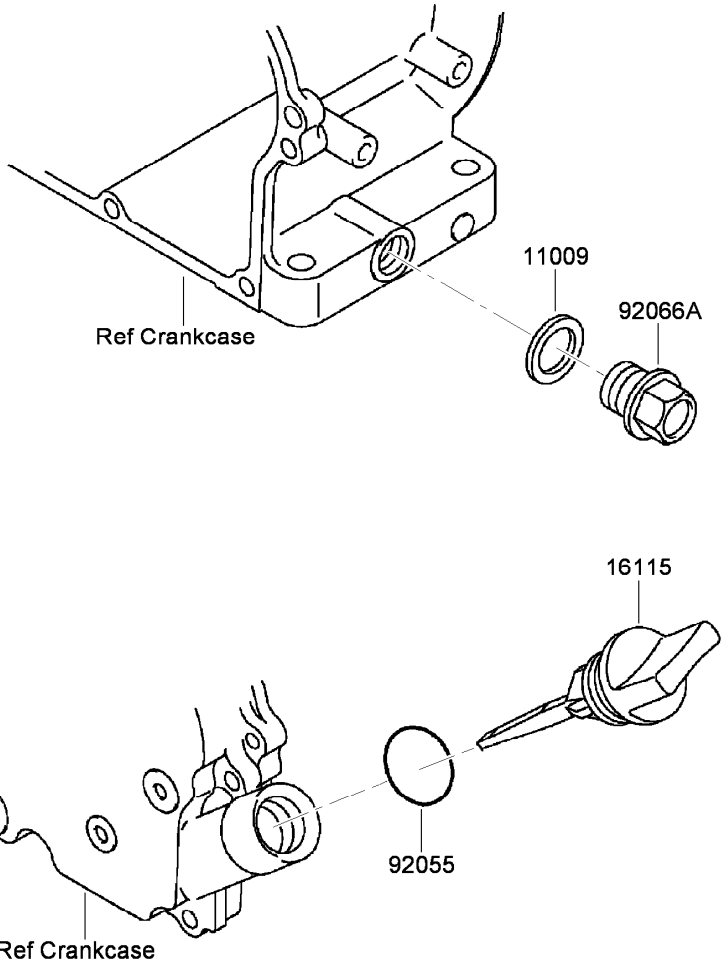

Lubrication Equipment Assembly

Ref.	*Part Number*	*Qty.*	*Description*
11009	93-8514	2	Gasket-Plug, Drain (14.2X19X2)
16115	93-8523	2	Cap-Filler, Oil
92055	94-9041	2	O-Ring (20Mm)
92066A	115-1761	2	Plug (14X12)

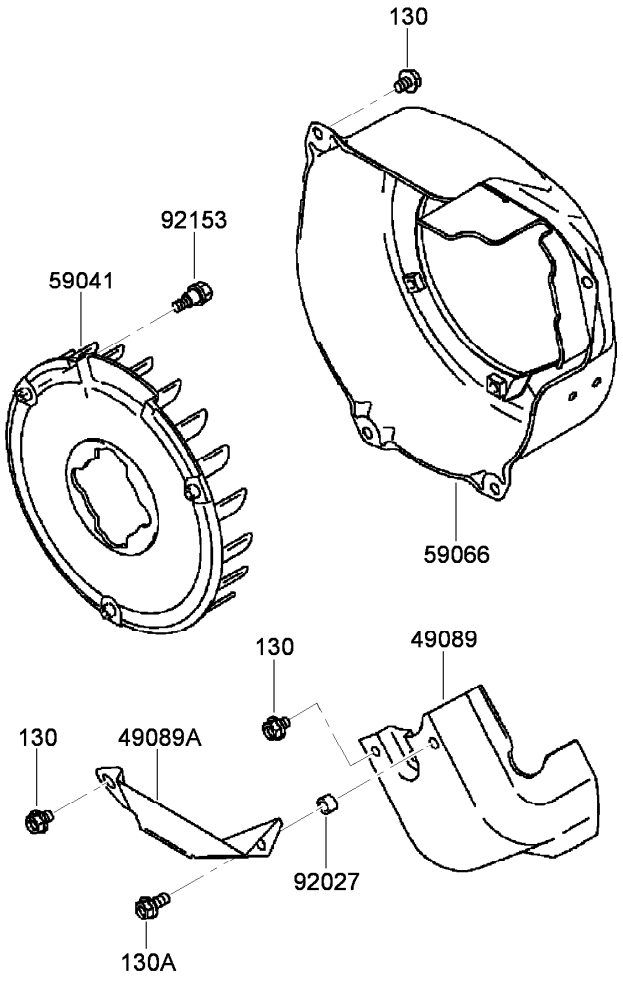

Cooling Equipment Assembly

Ref.	*Part Number*	*Qty.*	*Description*
130	115-1765	7	Bolt-Flanged (6X8)
130A	115-1764	1	Bolt-Flanged (6X14)
49089	93-8563	1	Shroud-Engine
49089A	93-8565	1	Shroud-Engine
59041	93-8572	1	Fan
59066	115-1804	1	Housing-Fan
92027	93-8564	1	Collar (6.8X10X6)
92153	115-1766	3	Bolt

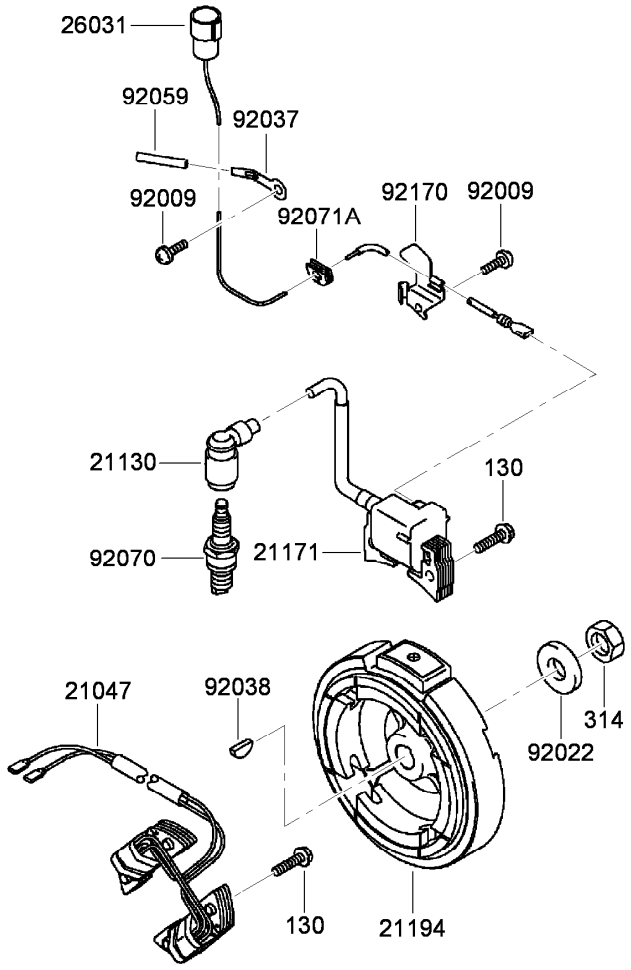

Electric Equipment Assembly

Ref.	*Part Number*	*Qty.*	*Description*
130	100-2610	6	Bolt-Flanged (6X25)
314	93-8568	1	Nut-Hex, Fine (14Mm)
21047	99-4267	1	Coil-Lighting
21130	KW10087	1	Cap-Sparkplug
21171	94-9031	1	Ignition Coil ASM
21194	99-6237	1	Flywheel ASM
26031	115-1767	1	Harness
92009	95-9716	2	Screw
92022	93-8569	1	Washer
92037	115-1771	1	Clamp
92038	93-8571	1	Key
92059	115-1768	1	Tube (5X6X75)
92070	108-2557	1	Sparkplug (Bpr5Es) (Ngk) Solid
92071A	115-1772	1	Grommet
92170	93-8583	1	Clamp

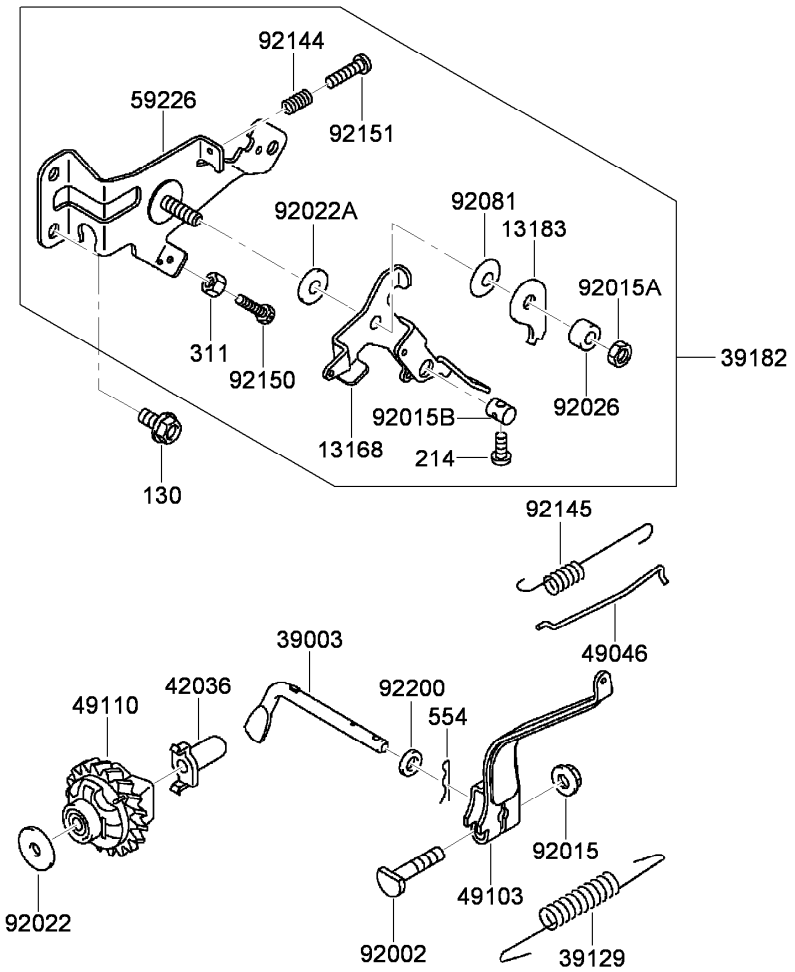

Control Equipment Assembly

Ref.	Part Number	Qty.	Description
130	115-1809	2	Bolt-Flanged (6X12)
214	115-1778	1	Screw-Pan (4X14)
311	100-2668	1	Nut-Hex (4Mm)
554	93-8607	1	Pin-Snap (1.2X21.2)
13168	93-8598	1	Lever
13183	93-8592	1	Plate
39003	93-8609	1	Arm-Pivot
39129	94-9030	1	Spring-Governor
39182	115-1754	1	Control Panel ASM
42036	108-2567	1	Sleeve
49046	115-1811	1	Rod-Governor
49103	93-8603	1	Arm-Governor
49110	115-1812	1	Governor ASM
59226	115-1773	1	Panel-Control

Ref.	Part Number	Qty.	Description
92002	93-8606	1	Bolt (6X28)
92015	93-8631	1	Nut
92015A	93-8595	1	Nut
92015B	93-8597	1	Nut
92022	94-6842	1	Washer (6.2X20X0.5)
92022A	93-8590	1	Washer
92026	115-1776	1	Spacer
92081	115-1775	1	Spring
92144	93-8588	1	Spring
92145	115-1810	1	Spring
92150	115-1813	1	Bolt
92151	115-1774	1	Bolt (4X22)
92200	93-8608	1	Washer (6.5X11.5X2.0)

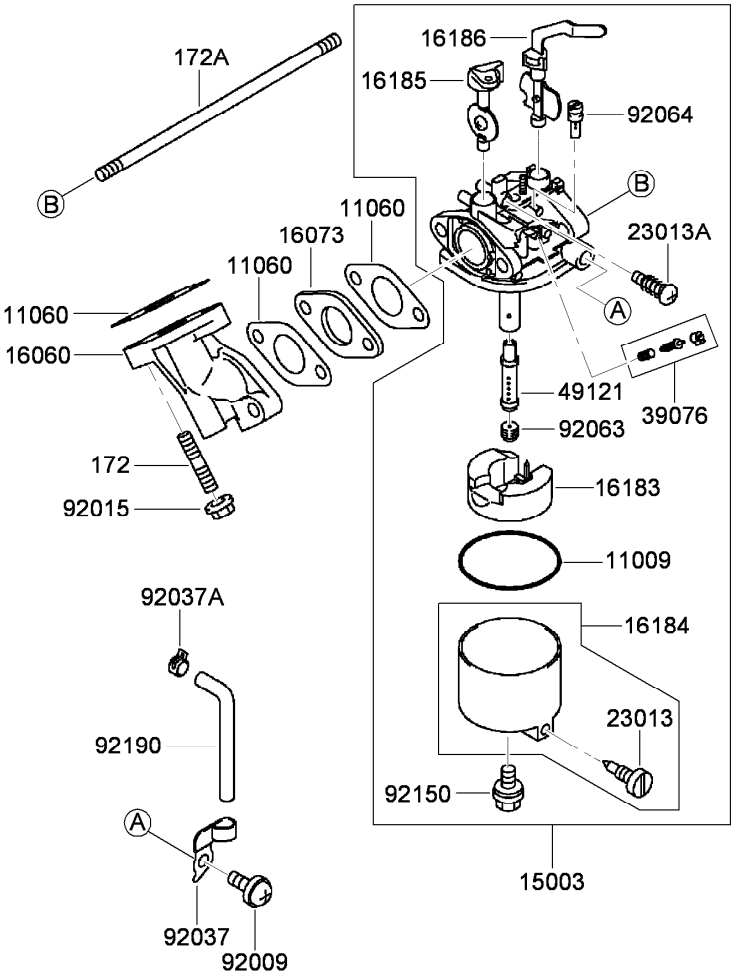

Carburetor Assembly

Ref.	*Part Number*	*Qty.*	*Description*
172	93-8632	2	Bolt-Stud (6X18)
172A	115-1814	1	Bolt-Stud (6X73)
11009	93-8624	1	Gasket
11060	93-8613	3	Gasket
15003	94-9032	1	Carburetor ASM
16060	93-8633	1	Pipe-Intake
16073	94-9048	1	Insulator
16183	94-6844	1	Float ASM
16184	93-8625	1	Float Chamber ASM
16185	94-9033	1	Throttle Valve ASM
16186	93-8617	1	Choke Valve ASM
23013	93-8626	1	Screw ASM
23013A	93-8619	1	Screw ASM
39076	94-9034	1	Limiter
49121	94-9035	1	Nozzle-Main
92009	94-6845	1	Screw
92015	93-8631	2	Nut
92037	94-6846	1	Clamp
92037A	93-8629	1	Clamp
92063	94-9036	1	Jet-Main (No.65)
92064	94-9037	1	Jet-Pilot (No.40)
92150	93-8627	1	Bolt
92190	93-8630	1	Tube

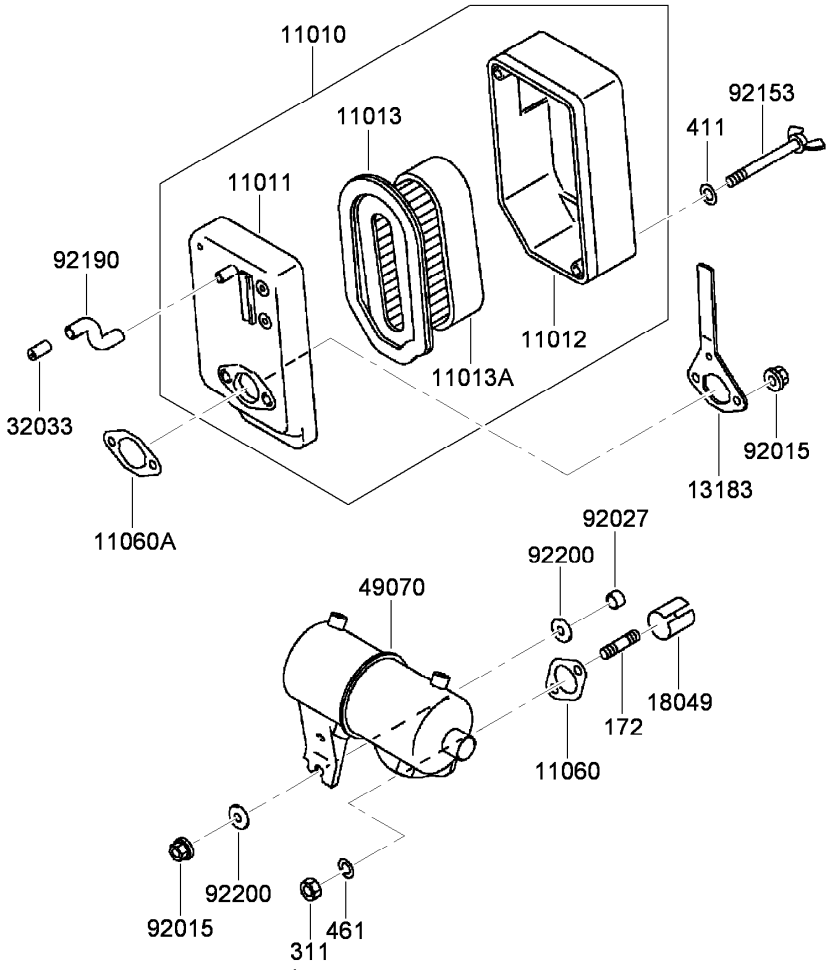

Air Filter and Muffler Assembly

Ref.	*Part Number*	*Qty.*	*Description*
172	115-1819	2	Bolt-Stud (6X16)
311	93-8656	2	Nut-Hex (6Mm)
411	115-1816	2	Washer-Plain (5Mm)
461	93-8655	2	Washer-Spring (6Mm)
11010	93-8634	1	Air Filter ASM
11011	93-8635	1	Case Filter ASM
11012	93-8638	1	Cap-Filter, Air
11013	93-8636	1	Element-Filter, Air
11013A	93-8637	1	Element-Filter, Air
11060	93-8654	1	Gasket-Muffler
11060A	93-8657	1	Gasket-Filter, Air
13183	93-8642	1	Plate-Filter, Air
18049	93-8652	1	Pipe-Exhaust
32033	93-8658	1	Pipe
49070	115-1817	1	Muffler
92015	93-8631	3	Nut
92027	93-8651	1	Collar
92153	93-8640	2	Bolt
92190	93-8659	1	Tube
92200	93-8650	2	Washer (.5X18X2.0)

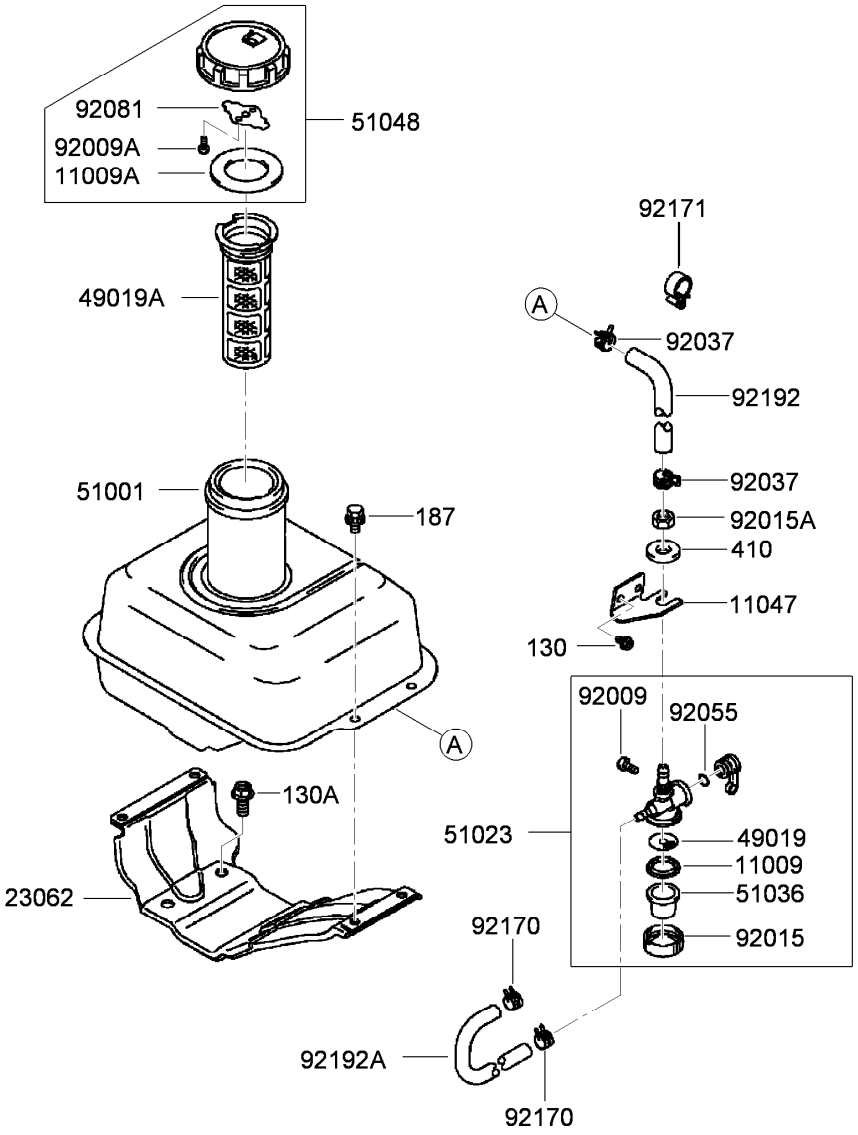

Fuel Tank and Valve Assembly

Ref.	Part Number	Qty.	Description
130	115-1864	2	Bolt-Flanged (5X8)
130A	115-1867	4	Bolt-Flanged (8X18)
187	115-1760	4	Bolt-Upset, Wsp (6X16)
410	93-8668	1	Washer-Plain (10Mm)
11009	93-8673	1	Gasket
11009A	93-8662	1	Gasket
11047	93-8681	1	Bracket
23062	104-2383	1	Bracket-Tank
49019	94-6849	1	Filter-Tapper, Fuel
49019A	94-6826	1	Filter-Fuel
51001	119-4132	1	Fuel Tank ASM
51023	93-8669	1	Fuel Tapper ASM
51036	93-8674	1	Cup-Tapper, Fuel

Ref.	Part Number	Qty.	Description
51048	93-8660	1	Fuel Cap ASM
92009	93-8670	1	Screw
92009A	93-8661	2	Screw
92015	93-8675	1	Nut
92015A	94-9042	1	Nut
92037	115-1861	2	Clamp-Clip, Hose
92055	93-8671	1	O-Ring
92081	93-8663	1	Spring
92170	115-1865	2	Clamp
92171	115-1862	1	Clamp
92192	115-1863	1	Tube (6.2X13.2X200)
92192A	115-1866	1	Tube (4X11X160)

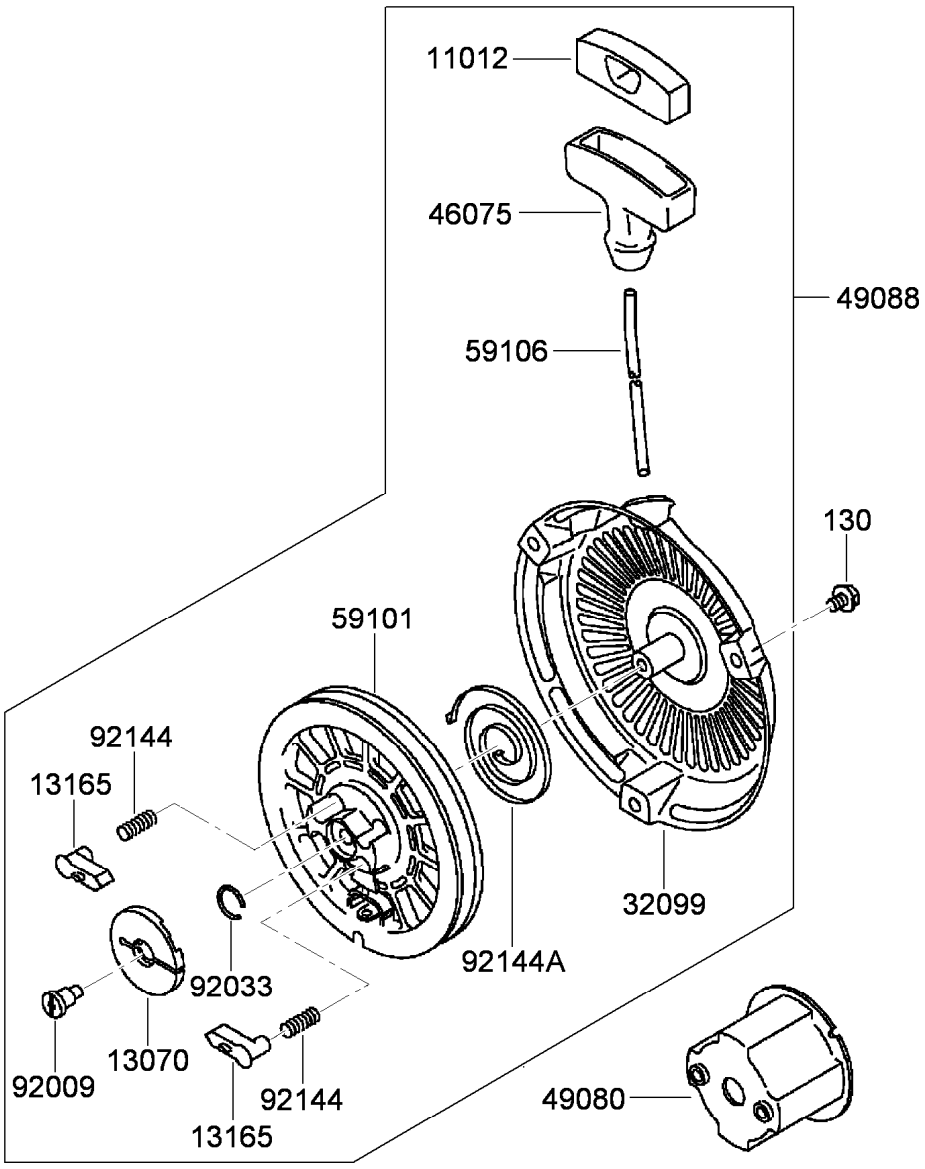

Starter Assembly

Ref.	*Part Number*	*Qty.*	*Description*
130	115-1765	3	Bolt-Flanged (6X8)
11012	94-9044	1	Cap-Grip
13070	93-8562	1	Guide-Pawl
13165	93-8554	2	Pawl-Starter, Recoil
32099	94-9046	1	Case-Starter, Recoil
46075	94-9045	1	Grip-Starter, Recoil
49080	93-8567	1	Pulley-Recoil
49088	93-8552	1	Recoil Starter ASM
59101	93-8556	1	Reel-Starter, Recoil
59106	93-8560	1	Rope (4X1500)
92009	93-8553	1	Screw
92033	93-8561	1	Ring-Retaining
92144	93-8555	2	Spring-Return
92144A	93-8557	1	Spring

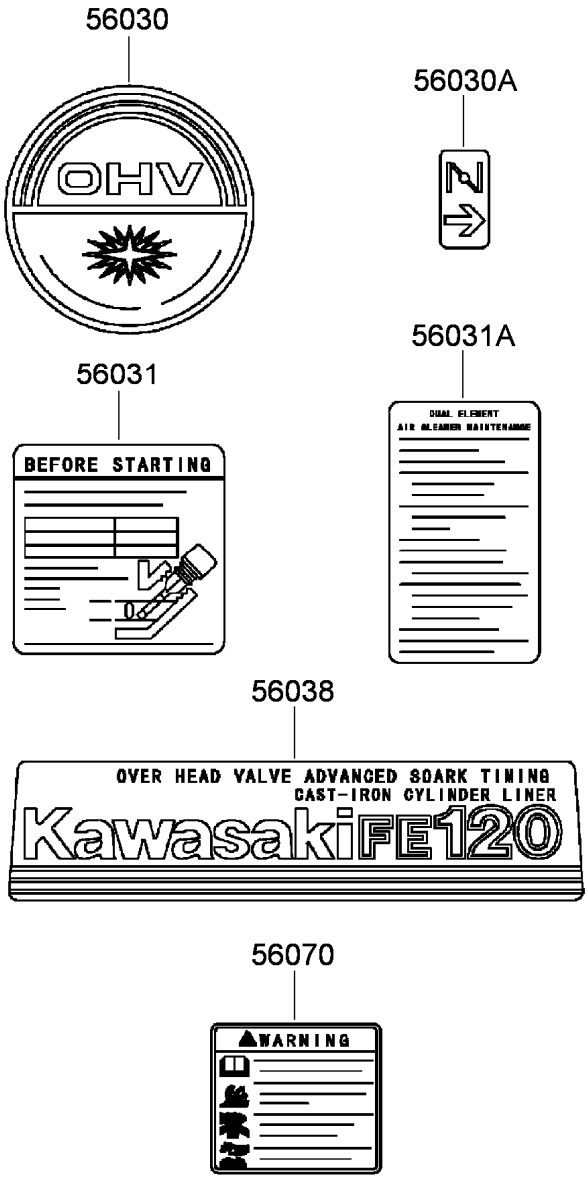

Label Set

Ref.	*Part Number*	*Qty.*	*Description*
56030	94-9027	1	Label-Recoil
56030A	93-8687	1	Decal-Choke
56031	93-8689	1	Decal-Instructions
56031A	93-8690	1	Decal-Maintenance
56038	94-9028	1	Label-Kawasaki
56070	93-8692	1	Decal-Warning

Attachments and Accessories

For 04052 Greensmaster 1000 Mower

Product Name	Model/Part
Light Kit	04061
Dethatcher Kit	04109
Dethatcher Kit	04111
Out Front Brush Kit	04119
Wheel Kit	04123
Groomer Reel Kit	04131
Full Roller ASM (21 inch)	104-2642
Hour Meter Kit	105-5350
Roller Rebuild Kit	107-1588
Bedbar-Aggressive	112-9279-03
Operator Presence Kit	112-9282
Smooth Scraper Kit	112-9285
Scraper Brush Kit	112-9286
Comb Scraper Kit	112-9287
Wide Wiehle Scraper Kit	112-9288
Narrow Wiehle Scraper Kit	112-9289
Bedknife-Edgemax, Microcut	115-1880
Bedknife-Edgemax, Tournament Cut	115-1881
16-Tooth Traction Pulley Kit	115-1886
Spark Arrestor Kit	117-1441
14 Blade Reel ASM	117-1449
MVP Filter and Spark Plug Kit	30065
Swaged Roller ASM	52-3590
Auxiliary Roller Kit	65-8560
.25 inch Clip Kit	65-9000
Wiehle Roller ASM (Cast Iron)	71-1550
Wiehle Roller ASM (.43 inch Spacing)	88-6790
Bedknife-Microcut	93-4262
Bedknife-Low Cut	93-4264
8 Blade Reel ASM	93-6087
Wiehle Roller ASM (2.5 inch Dia)	93-9045
Height-of-Cut Bar ASM	94-9010
Jet-Main, No. 62 (High Altitude)	98-8735
Jet-Main, No. 60 (High Altitude)	98-8736



Count on it.