Form No. 3367-889 Rev A

Count on it.

Parts Catalog

Workman® MDE Utility Vehicle

Model No. 07299—Serial No. 311000001 and Up

Register at www.Toro.com.

Original Instructions (EN)

Ordering Replacement Parts

To order replacement parts, please supply the part number, the quantity, and the description of each part desired.

Understanding Reference Numbers

Each identified part in an illustration has a reference number. The reference number for a part also appears in the parts list, along with other information about the part.

This catalog uses two special reference number formats, one to indicate parts in a service assembly and another to indicate the quantity of a given part in an illustration.

Service Assembly Reference Numbers

Parts in service assemblies have reference numbers in the form a:b. The a represents the reference number of the entire service assembly and the b represents a sequential number unique to each part within the service assembly.

For example, a wheel assembly might be identified by reference number 6, the tire by 6:1, the valve by 6:2, and the wheel by 6:3. When you order the assembly identified by reference number 6, you receive all parts identified by reference numbers 6:1,6:2, and 6:3. However, you may also order any part individually. Reference numbers of this type appear in illustration and in parts lists.

Reference Numbers Indicating Quantity

In an illustration, if a reference number indicates more than one part, the reference number has the form nX y. The n represents the quantity of the part, the X is the multiplication symbol, and the y represents the reference number.

For example, in an illustration, the reference number 2X 37 means that two of the parts identified by reference number 37 are indicated.

List of Abbreviations

AR: as required

ASM: assembly

BBC: blade brake control

BHTF: button head thread forming

CARR: carriage

CCW: counter clockwise

CW: clockwise

DEG: degrees

DPA: Dual Point Adjustment

ECM: electronic control module

EXT: external

FH: flat head

GA: gauge

HD: heavy-duty

HF: hex flange

HH: hex head

HHF: hex head flange

HHFTF: hex head flange thread forming

HJ: hex jam

HLH: hex lag head

HOC: height-of-cut

HSBH: hex socket button head

HSFH: hex socket flat head

HSH: hex socket head

HWH: hex washer head

HWHTF: hex washer head thread forming

HYD: hydraulic

LH: left hand

LP: Liquid Propane

NI: nylon insert

NPTF: national pipe thread fine

PFH: phillips flat head

PPH: phillips pan head

PPHTF: phillips pan head thread forming

PRH: phillips round head

PTH: phillips truss head

PTO: power-take-off

RH: right hand

ROPS: roll-over protection system

RRB: rear roller brush

SFH: slotted fillister head

SHH: slotted hex head

SHWH: slotted hex washer head

SPH: slotted pan head

SQH: square head

SRH: slotted round head

STD: standard

TAP: self tapping

TTH: torx truss head

© 2011—The Toro® Company
8111 Lyndale Avenue South
Bloomington, MN 55420

Contact us at www.Toro.com.
Printed in the USA.
All Rights Reserved

Contents

Dash Assembly 4
Solenoid Assembly No. 104-7135 6
Pedal Box Assembly 7
Master Cylinder and Brake Line Assembly 8
Master Cylinder Assembly No. 104-6782 9
Frame Assembly 10
Seat Base Assembly 11
Offboard 48 Volt Charger Assembly No. 112-3072 12
Front Tire, Spindle and Tie Rod Assembly 13
Controller Assembly 15
Battery and Transaxle Assembly 16
Electric Motor Assembly No. 104-7335 17
Electric Transaxle Assembly No. 114-8330 18
LH Rear Brake Assembly No. 114-8332 20
RH Rear Brake Assembly No. 114-8331 21
Upper Steering Assembly 22
Steering Box Assembly No. 112-3130 23
Box and Tailgate Installation Assembly 24
Cargo Bed Service Assembly No. 119-9710 25
Hood and Fender Assembly 26
Attachments and Accessories 27

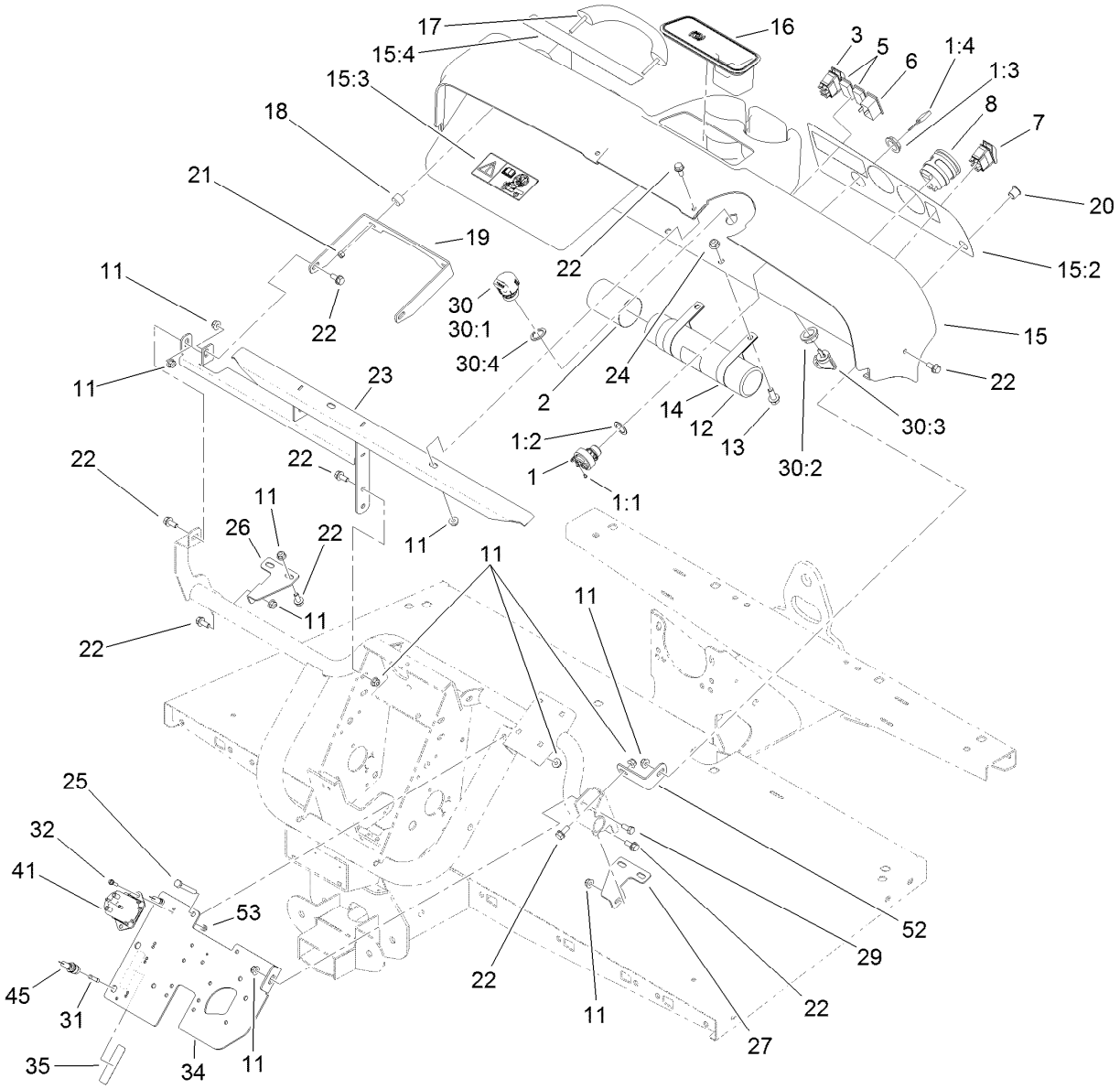

Dash Assembly

Ref.	Part Number	Qty.	Description
1	107-0348	1	Switch-Key, 48V
1:1	3250-28	3	Screw
1:2	108-8659	1	Washer-Backup
1:3	108-8660	1	Nut-Mounting
1:4	108-6994	1	Key-Ignition
2	104-7048	1	Cap-Housing
3	107-0255	1	Switch
5	99-7420	2	Plug-Hole
6	104-7129	1	Light-Indicator
7	107-0747	1	Switch-Rocker
8	107-0260	1	Guage-Hour/Battery Level, 48 Volt
11	104-8300	18	Nut-Flange, NI
12	104-7050	1	Tube-Manual
13	3234-11	2	Screw-HHF
14	2412-133	2	R-Clamp
15	114-8311	1	Dash ASM
15:2	112-3310	1	Decal-Dash, Ce
15:3	104-7215	1	Decal-Danger

Ref.	Part Number	Qty.	Description
15:4	115-2412	1	Decal-No Storage
16	104-6930	1	Plug-Rubber
17	112-3320	1	Handle-Grip
18	114-8301	2	Spacer
19	112-3391-03	1	Bracket-Grip, Handle
20	94-5627	1	Plug
21	104-7201	2	Nut-HF
22	110-5053	15	Screw-Flange
23	115-7651-03	1	Dash Support ASM
24	104-8301	2	Nut-Flange, NI
25	322-11	2	Screw-HH
26	114-8304	1	Bracket-Dash Mount, RH
27	114-8312	1	Bracket-Dash Mount, LH
29	322-3	1	Screw-HH
30	110-2580	1	Switch-Key, Supervisor
30:1		1	Switch-Key ●
30:2	108-8660	1	Nut-Mounting
30:3	110-5221	1	Set-Key, Supervisor
30:4	108-8659	1	Washer-Backup

● Not serviced separately

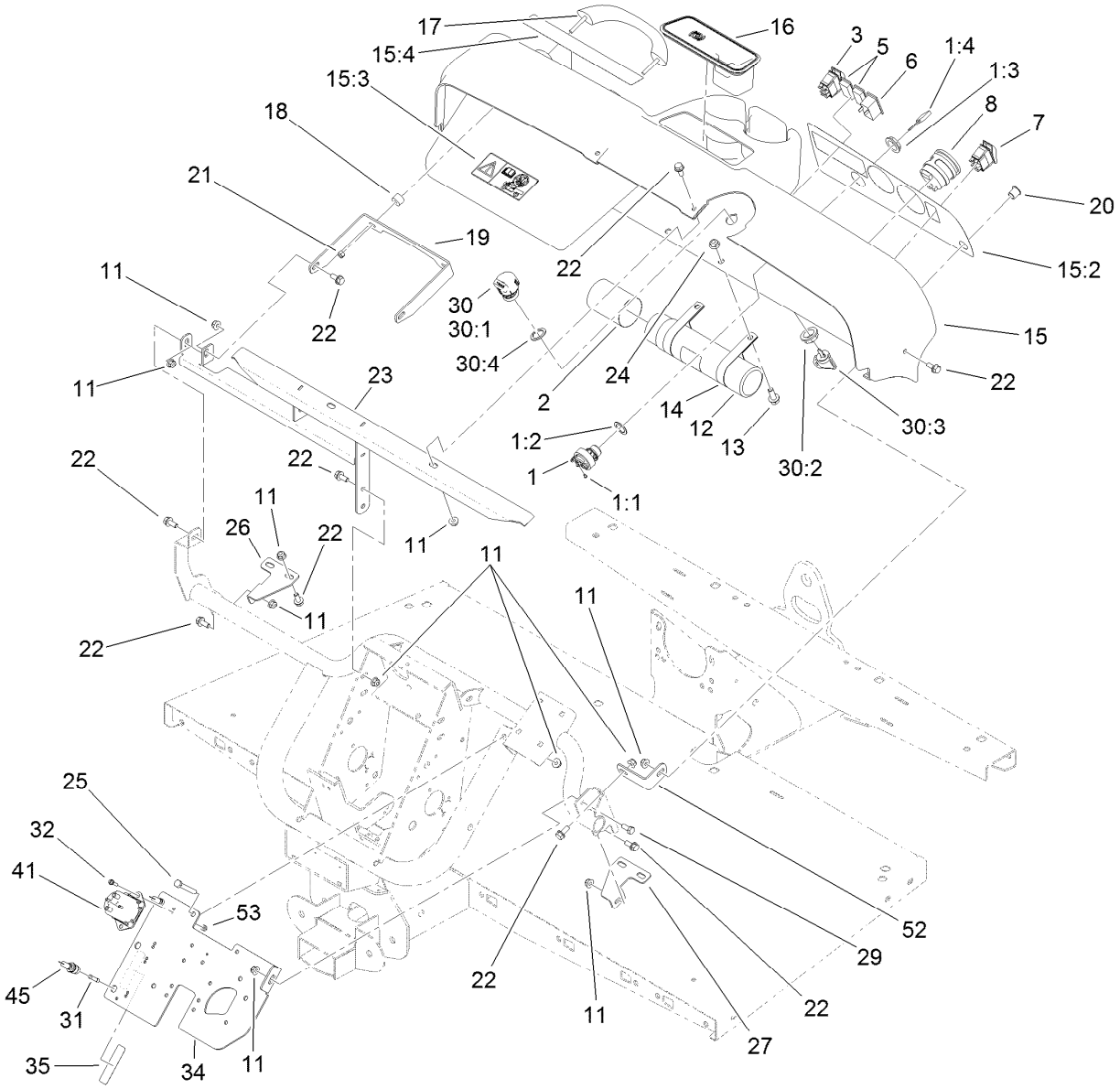

Dash Assembly (continued)

Ref.	Part Number	Qty.	Description
31	98-8876	2	Fuse-10 Amp
32	32105-13	2	Screw-HWH
34	112-3376-03	1	Plate-Mount, Electrical
35	115-7621	1	Decal-Electrical

Ref.	Part Number	Qty.	Description
41	104-7135	1	Solenoid
45	218-489	2	Holder-Fuse
52	114-8305	1	Angle-Mount, Dash (LH)
53	3296-2	2	Nut-Lock, NI

● Not serviced separately

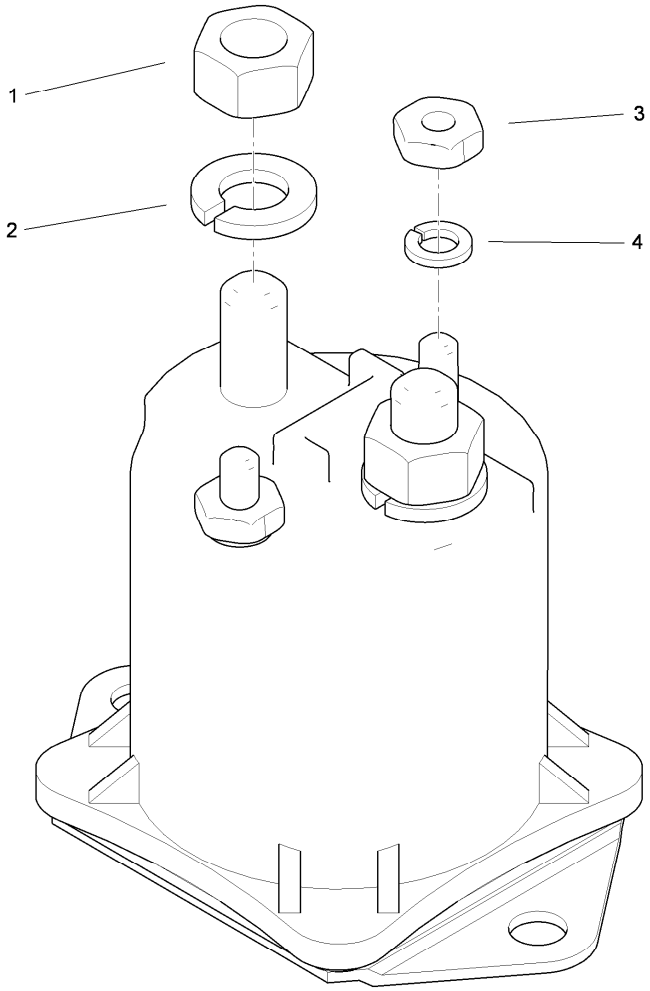

Solenoid Assembly No. 104-7135

Ref.	*Part Number*	*Qty.*	*Description*
1	3217-6	2	Nut-Hex
2	3253-4	2	Washer-Lock
3	3219-14	2	Nut-Hex
4	3253-17	2	Washer-Lock

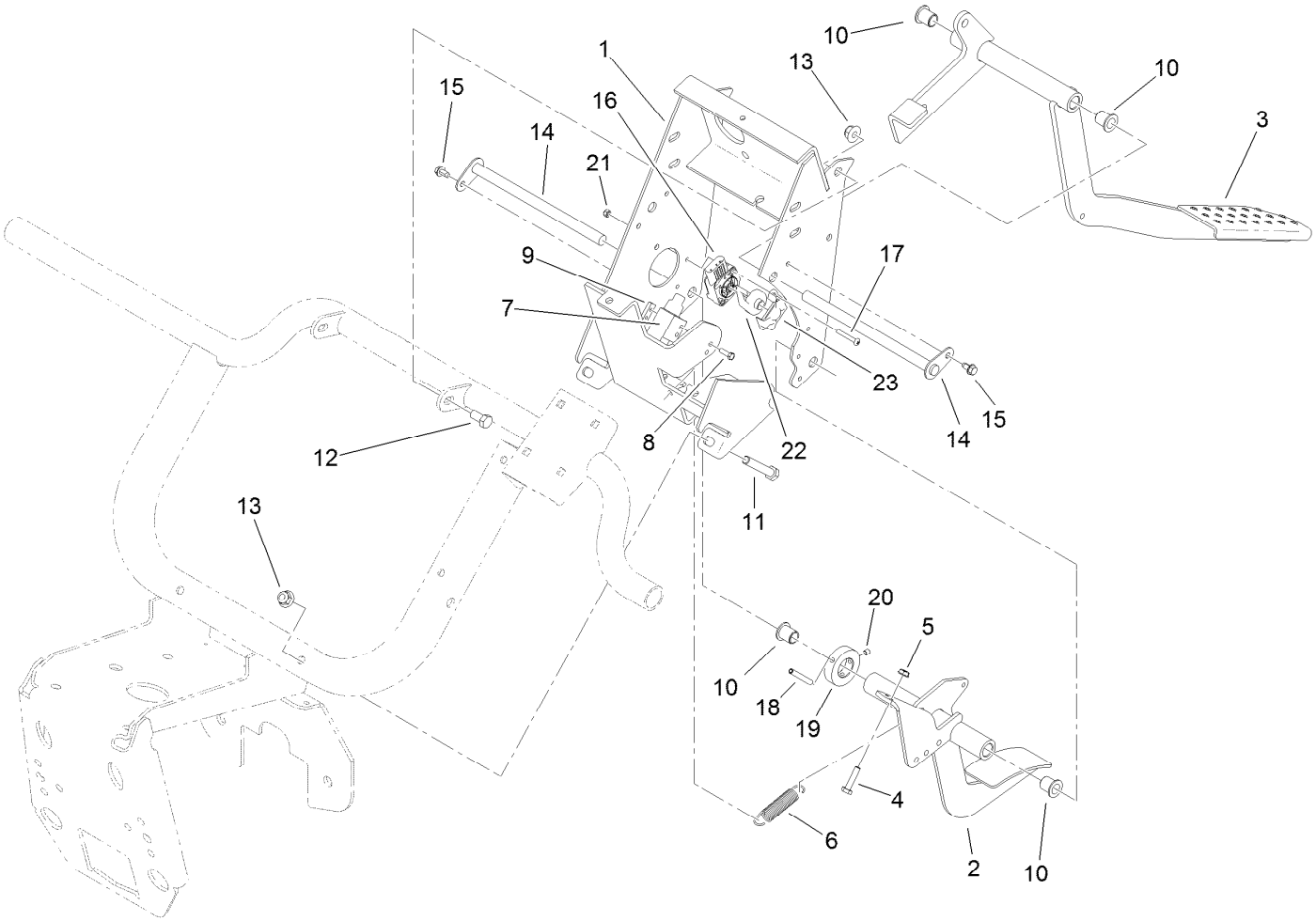

Pedal Box Assembly

Ref.	Part Number	Qty.	Description
1	119-0748-03	1	Pedal Support Frame ASM
2	115-7630-03	1	Throttle Pedal ASM
3	112-3314-03	1	Brake Pedal ASM
4	321-7	2	Screw-HH
5	32149-2	2	Nut-Keps
6	104-6415	1	Spring-Return, Pedal
7	99-7407	1	Switch
8	3290-134	2	Screw
9	1-633181	1	Plate-Tapped
10	256-155	4	Bushing-Flange
11	323-11	2	Screw-HH
12	323-4	2	Screw-HH

Ref.	Part Number	Qty.	Description
13	104-8301	4	Nut-Flange, NI
14	104-7164	2	Pivot-Pedal
15	12-3270	2	Screw
16	119-0737	1	Sensor-Position, Rotary
17	104-1452	2	Screw-PPH
18	117-5071	1	Pin-Roll
19	104-7301	1	Collar
20	3245-32	2	Screw-HSH
21	3296-1	2	Nut-Lock
22	117-5059	1	Pivot-Sensor, Speed
23	117-5061	1	Retainer

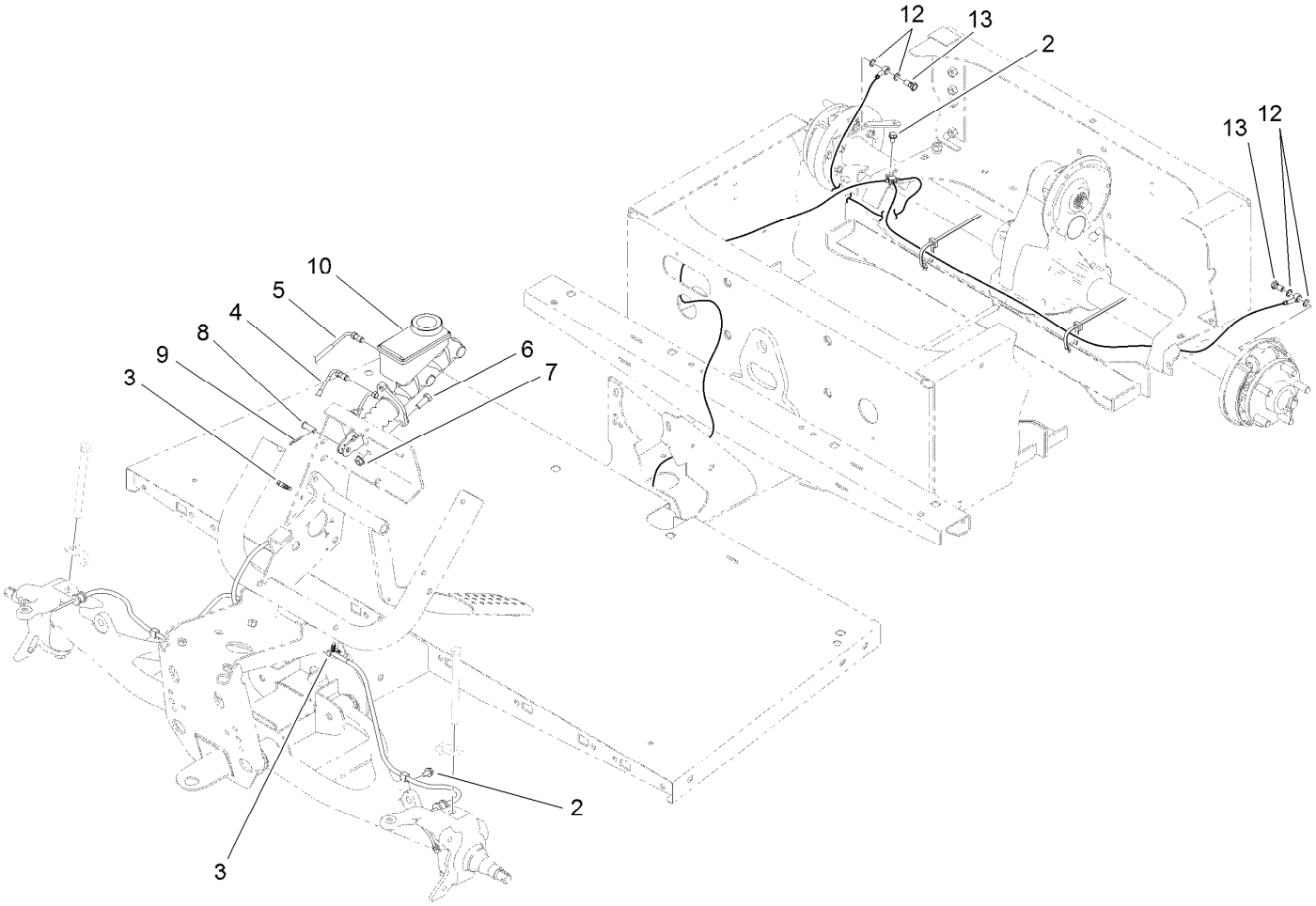

Master Cylinder and Brake Line Assembly

Ref.	*Part Number*	*Qty.*	*Description*
2	32104-82	3	Screw-HHF
3	114-8324	4	Clip-Line, Brake
4	112-2925	1	Front Brake Line ASM
5	115-2409	1	Rear Brake Line ASM
6	323-6	2	Screw-HH
7	3290-357	2	Nut-HHF, Whiz
8	283-2	1	Pin-Clevis
9	3272-10	1	Pin-Cotter
10	104-6782	1	Cylinder-Master
12	115-2341	4	Washer-Banjo
13	115-2340	2	Bolt-Banjo

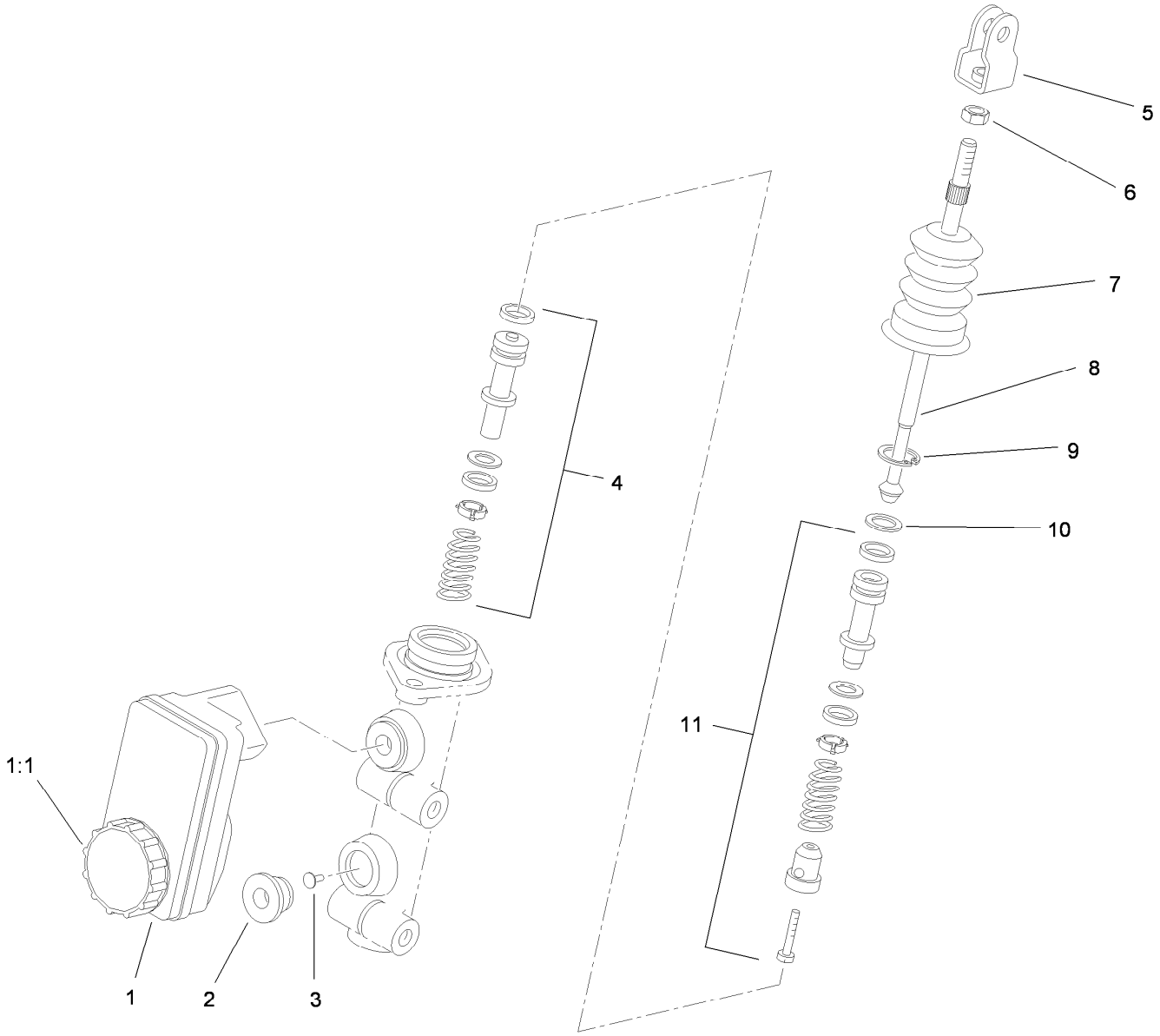

Master Cylinder Assembly No. 104-6782

Ref.	*Part Number*	*Qty.*	*Description*
1	104-6845	1	Reservoir ASM
1:1	92-4112	1	Cap ASM
2	93-8971	2	Seal-Port, Flange
3	92-4103	1	Pin-Stop
4	92-4102	1	Secondary Piston ASM
5	92-4110	1	Clevis
6	21-0360	1	Nut-Hex
7	94-5209	1	Cover-Dust
8	94-5210	1	Rod-Push
9	92-4109	1	Ring-Snap
10	92-4108	1	Retainer-Washer
11	92-4101	1	Primary Piston ASM

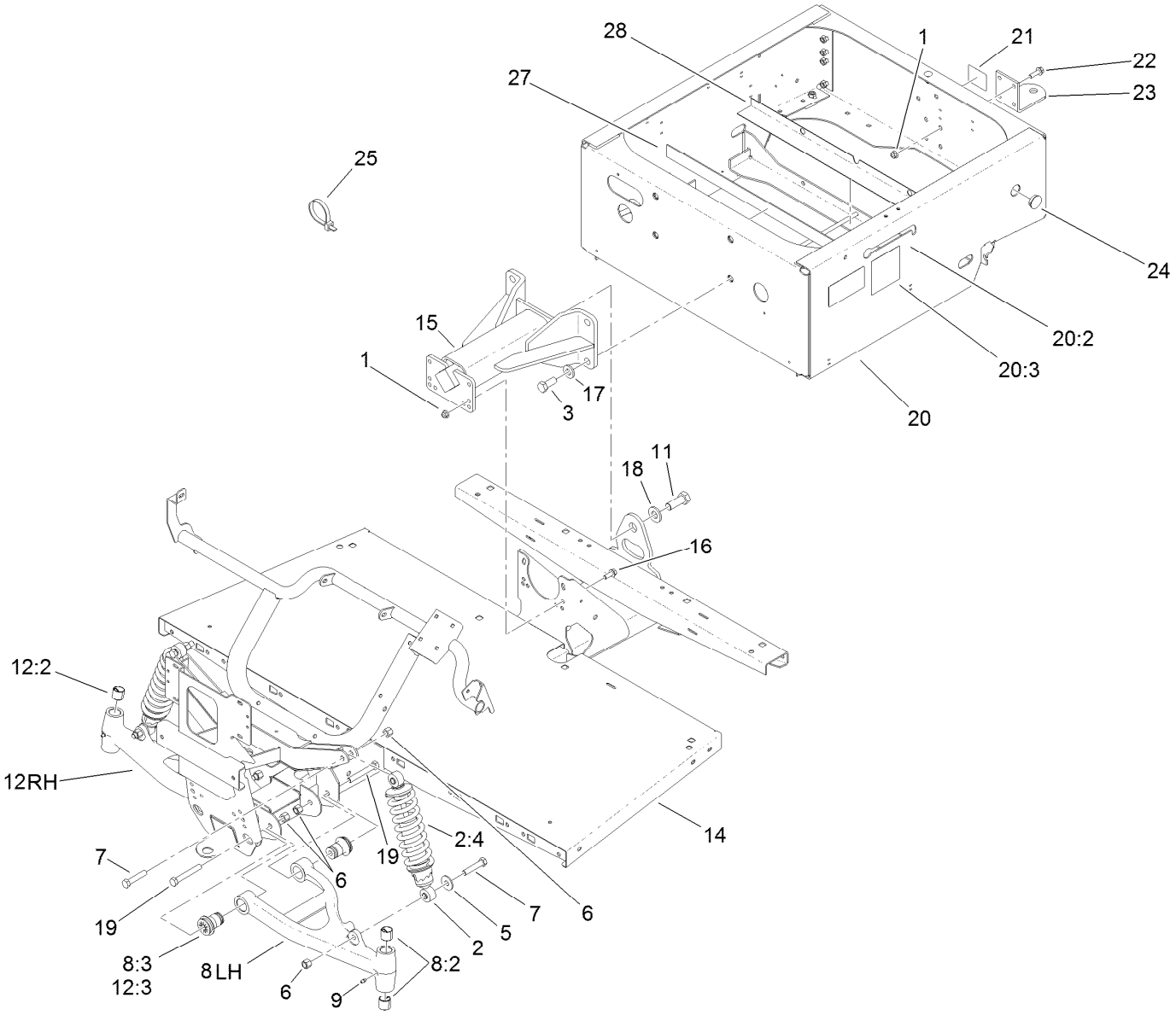

Frame Assembly

Ref.	Part Number	Qty.	Description
1	104-8301	8	Nut-Flange, NI
2	112-2975	2	Shock/Spring ASM
2:4	112-3383	1	Spring
3	327-4	4	Screw-HH
5	51-3500	2	Washer
6	3296-23	8	Nut-Lock, NI
7	325-10	4	Screw-HH
8	114-8313	1	LH A-Arm ASM
8:2	3-0348	2	Bushing
8:3	87-1450	2	Bushing-Flange
9	302-5	2	Fitting-Grease
11	328-24	1	Screw-HH
12	114-8314	1	RH A-Arm ASM
12:2	3-0348	2	Bushing
12:3	87-1450	2	Bushing-Flange
14	112-3340-03	1	Front Frame ASM

Ref.	Part Number	Qty.	Description
15	99-7700	1	Pivot Yoke ASM
16	3234-11	4	Screw-HHF
17	99-7667	4	Washer-Flat
18	87-3060	1	Washer-Hardened
19	325-14	4	Screw-HH
20	119-9631	1	Rear Frame ASM
20:2	104-7207	2	Decal-Electric
20:3	107-0257	1	Decal-Polarity
21	99-7350	1	Decal-Rating, Hitch (Light Duty)
22	3234-24	4	Screw-HHF
23	99-7654-03	1	Hitch-Duty, Light
24	94-1402	1	Plug-Hole
25	3290-379	15	Tie-Cable
27	107-0252	1	Pad-Battery
28	107-0267	4	Isolator-Battery

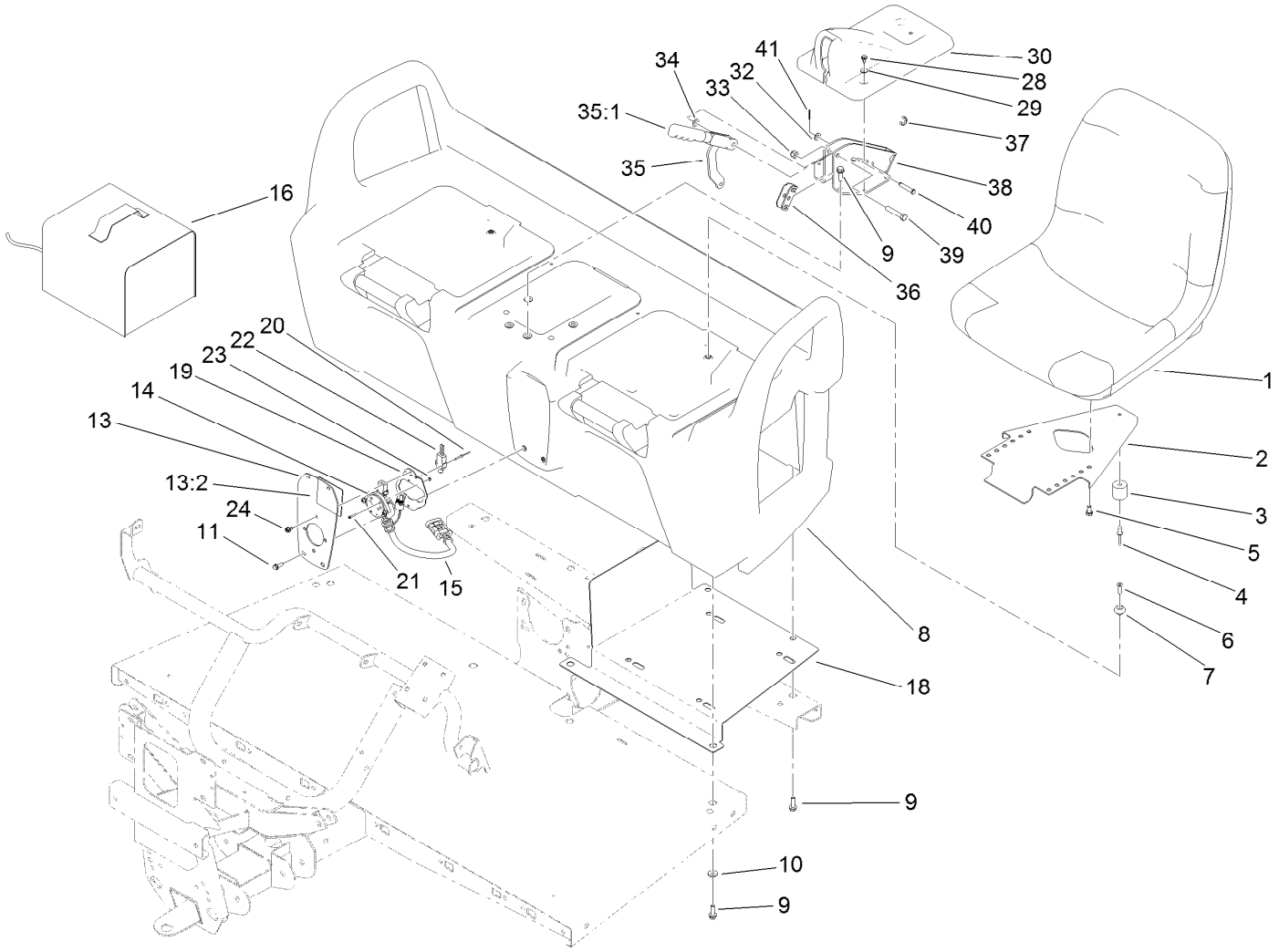

Seat Base Assembly

Ref.	Part Number	Qty.	Description
1	112-2923	2	Seat ASM
2	99-7829	2	Bracket-Seat
3	99-7830	2	Rubber Receptical ASM
4	3290-412	2	Rivet
5	33114-016	8	Screw-HH
6	32108-5	2	Screw-FH
7	99-7833	2	Post-Holding
8	104-6847	1	Seat Base ASM
9	3234-17	12	Screw-HHF
10	88-7200	8	Washer-Flat
11	32105-15	4	Screw
13	107-0370	1	Plate-Receptacle
13:2	107-0295	1	Decal-Charger
14	107-0288	1	Receptacle-Charger
15	115-1913	1	Harness-Wire, Charger
16	112-3072	1	Charger-48V T145, Offboard
18	107-0359-03	1	Tray-Seatbase
19	107-0716	1	Bracket-Mount, Socket

Ref.	Part Number	Qty.	Description
20	107-0333	2	Rivet-Pop
21	107-0334	2	Screw-HSH
22	99-3410	1	Switch
23	3296-9	2	Nut-Lock
24	32104-17	4	Screw-HWH
28	12-3270	2	Screw
29	3256-1	2	Washer-Flat
30	104-7014	1	Cover-Brake, Parking
32	3256-23	1	Washer-Flat
33	3296-39	1	Nut-Lock, NI
34	3290-477	1	Washer-Curved
35	104-6842	1	Lever-Brake, Park
35:1	106-7972	1	Grip-Handle
36	87-3480	1	Bracket-Equalizer, Cable
37	32120-47	2	Ring-Retaining, External
38	104-6844-03	1	Support-Brake, Park
39	323-10	1	Screw-HH
40	94-3829	1	Pin-Clevis
41	3272-6	1	Pin-Cotter

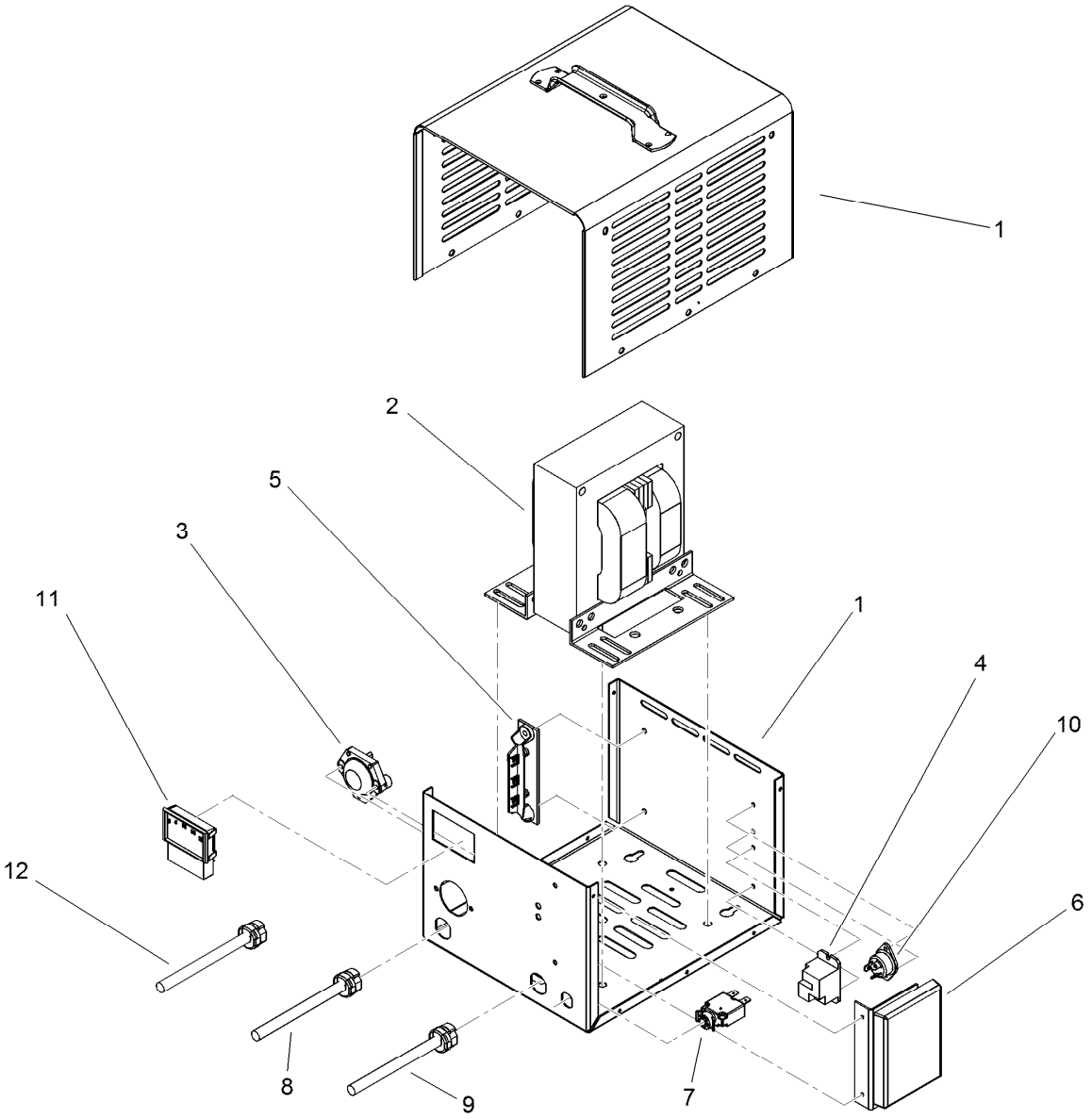

Offboard 48 Volt Charger Assembly No. 112-3072

Ref.	*Part Number*	*Qty.*	*Description*
1		1	Case ASM ●
2		1	Transformer ASM ●
3	108-1161	1	Fuse ASM
4	108-1162	1	Relay-48V, Dc
5	108-1163	1	Diode ASM
6	112-3073	1	Control Board ASM
7	110-2579	1	Breaker-Circuit
8	108-1166	1	Kit-Cordset, 8.5 Foot (Dc)
9	108-1167	1	Kit-Cordset, 72 Inch (Ac) Us
10	108-1168	1	Terminal And Screw ASM
11	108-1169	1	Ammeter
12	108-3071	1	Kit-Cordset, 20 Foot (Dc)

● Not serviced separately

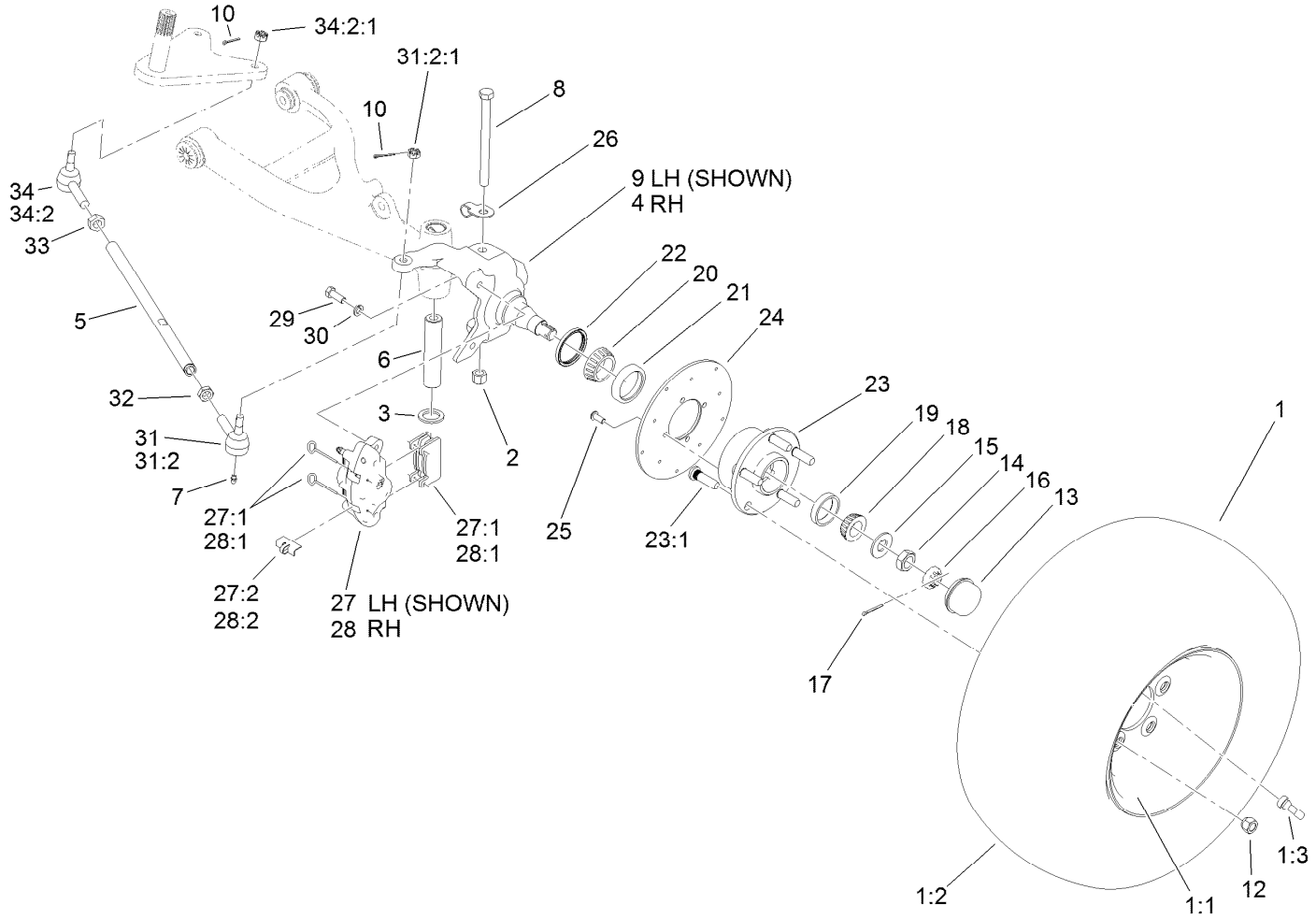

Front Tire, Spindle and Tie Rod Assembly

Ref.	Part Number	Qty.	Description
1	104-7290	2	Tire And Wheel ASM
1:1	104-7288	1	Wheel
1:2	104-7289	1	Tire
1:3	232-27	1	Stem-Valve
2	3296-23	2	Nut-Lock, NI
3	256-115	2	Washer-Thrust
4	112-3167	1	Spindle-RH
5	115-7654	2	Tie Rod
6	99-7499	2	Sleeve-Kingpin
7	302-5	4	Fitting-Grease
8	325-20	2	Screw-HH
9	112-3166	1	Spindle-LH
10	3272-7	4	Pin-Cotter
12	242-50	10	Nut-Lug
13	241-119	2	Cap-Dust
14	3220-7	2	Nut-Jam
15	93-0309	2	Washer-Tab
16	93-0307	2	Nut-Lock, Retainer
17	3272-12	2	Pin-Cotter

Ref.	Part Number	Qty.	Description
18	254-94	2	Bearing-Cone, Tapered
19	254-72	2	Bearing-Cup, Tapered
20	254-106	2	Cone-Bearing, Tapered
21	254-107	2	Cup-Bearing, Tapered
22	108-7019	2	Seal-Shaft
23	117-8071	2	Hub ASM
23:1	10-6830	5	Stud-Type, Drive
24	104-6891	2	Rotor
25	3274-55	8	Screw-HSBH
26	112-3311	2	Clip-Hose
27	112-3150	1	Caliper-LH
27:1	107-0708	1	Friction Pad And Pin Kit
27:2	112-3152	1	Spring-Rattle, Anti
28	112-3151	1	Caliper-RH
28:1	107-0708	1	Friction Pad And Pin Kit
28:2	112-3152	1	Spring-Rattle, Anti
29	323-6	4	Screw-HH
30	3253-21	4	Washer-Lock
31	112771-03	2	LH Ball Joint ASM

● Not serviced separately

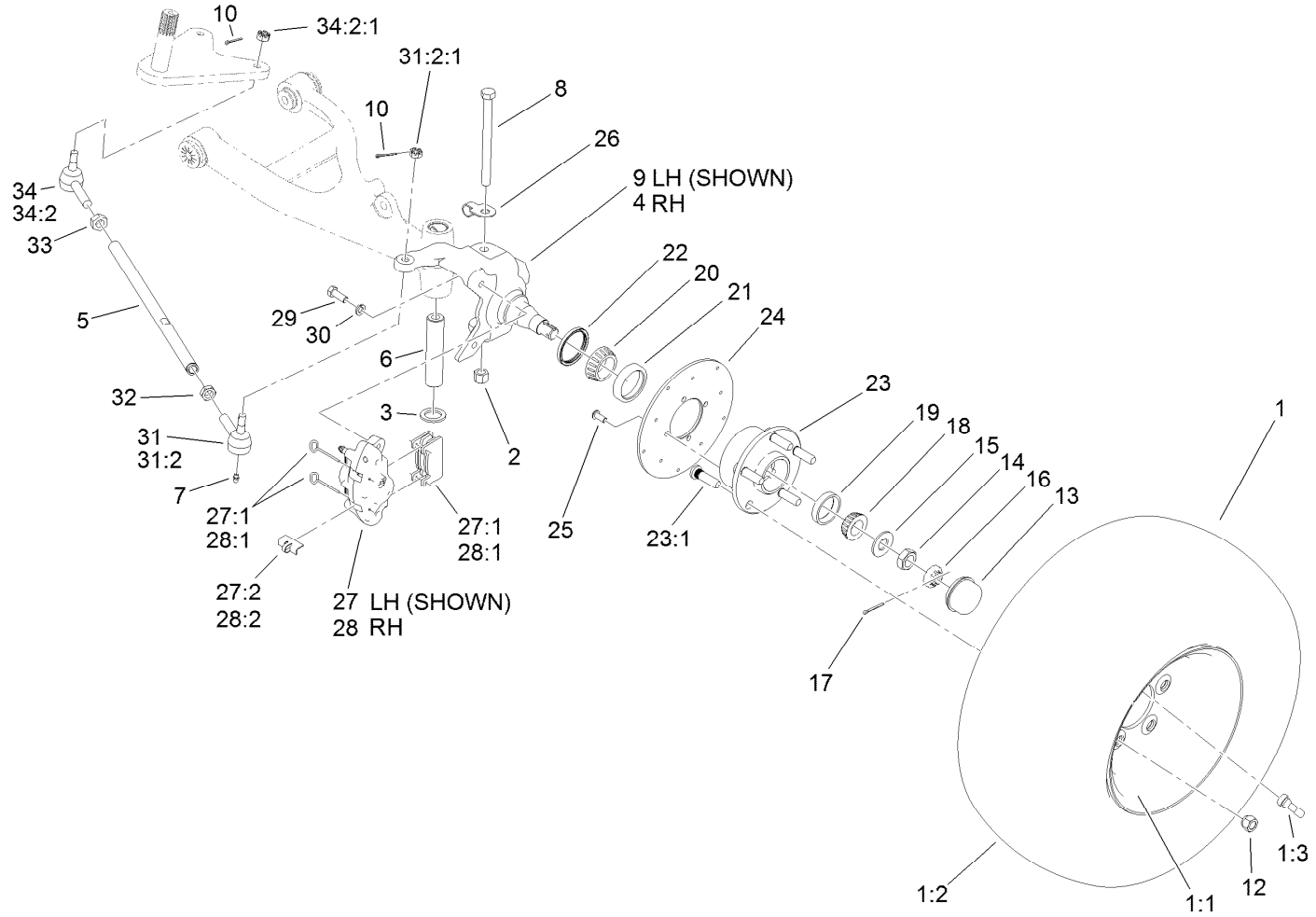

Front Tire, Spindle and Tie Rod Assembly (continued)

Ref.	Part Number	Qty.	Description
31:2		1	Joint-Ball, LH ●
31:2:1	915031	1	Nut
32	3218-21	2	Nut-Jam
33	3220-11	2	Nut-Jam

Ref.	Part Number	Qty.	Description
34	112772-03	2	RH Ball Joint ASM
34:2		1	Joint-Ball, RH ●
34:2:1	915031	1	Nut

● Not serviced separately

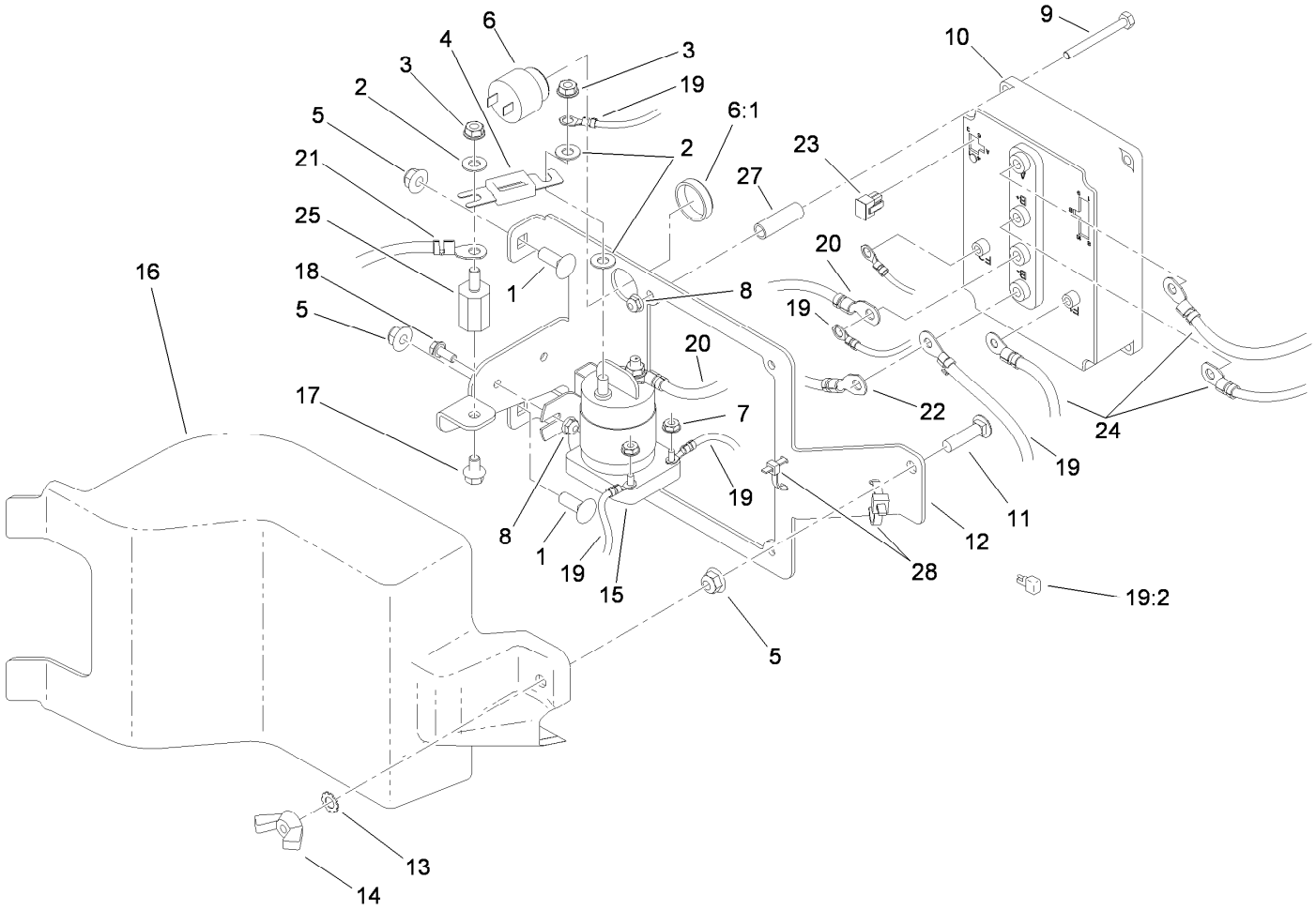

Controller Assembly

Ref.	Part Number	Qty.	Description
1	3231-22	2	Screw-CARR
2	107-0394	3	Washer-Flat
3	107-0380	3	Nut-HHF
4	104-7320	1	Fuse
5	104-8301	3	Nut-Flange, NI
6	94-5582	1	Alarm-Audio
6:1	104-5107	1	Nut-Plastic, Knurled
7	32149-8	2	Nut-Keps
8	104-7201	6	Nut-HF
9	321-15	4	Screw-HH
10	110-2569	1	Controller-Sevcon
11	3231-4	1	Screw-CARR
12	104-7137-03	1	Mount-Controler
13	3255-9	1	Washer-Lock
14	32103-3	1	Nut-Wing
15	104-7136	1	Contactor-48V

Ref.	Part Number	Qty.	Description
16	104-7138	1	Cover-Controller
17	100-1719	1	Screw-Flange
18	3234-33	2	Screw-HHF
19	117-4700	1	Harness-Wire, Mid Duty Elect
19:2	100-4918	1	Diode
20	107-0740	1	Cable-Battery, Positive
21	107-0741	1	Cable-Battery, Positive
22	107-0742	1	Cable-Battery, Negative
23	32160-130	1	Connector
24	107-0737	1	Harness-Wire, Battery Cable
25	107-0286	1	Isolator
27	107-0285	4	Spacer
28	3290-379	2	Tie-Cable

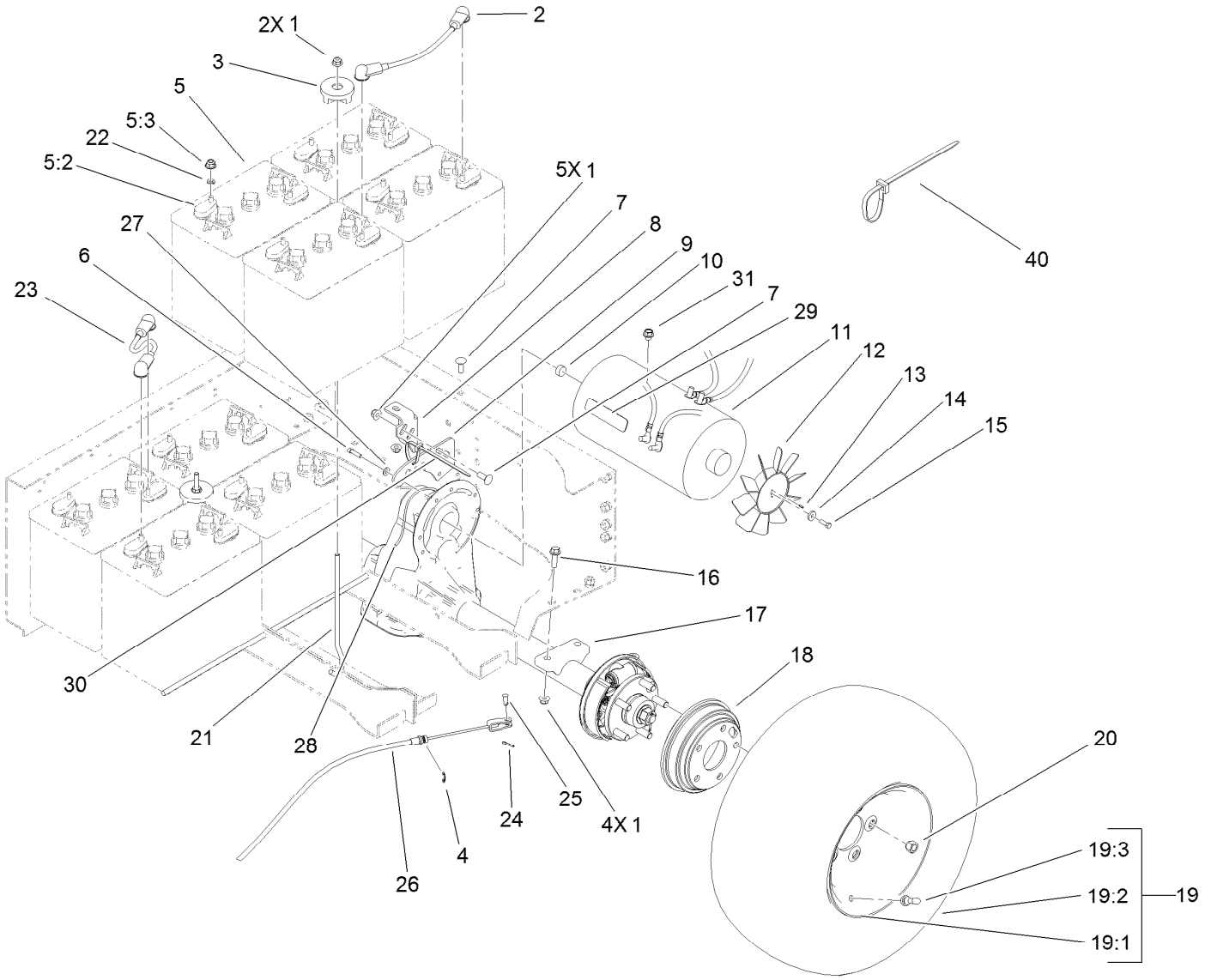

Battery and Transaxle Assembly

Ref.	Part Number	Qty.	Description
1	104-8301	11	Nut-Flange, NI
2	107-0739	1	Cable-Battery, Positive
3	104-7149	2	Hold Down ASM
4	32120-47	2	Ring-Retaining, External
5		8	Battery-Trojan T145 ●
5:2	107-0289	2	Cover-Terminal, Battery
5:3	107-0388	2	Nut
6	3274-26	6	Screw-HSH
7	3231-22	5	Screw-CARR
8	104-7249-03	1	Bracket-Support
9	104-7305-03	1	Plate-Mount, Transaxle
10	112-3399	1	Damper-Rubber
11	104-7335	1	Motor-Electric
12	107-0259	1	Fan-10 Blade, Clockwise
13	32121-68	2	Pin-Roll
14	73-3580	1	Washer
15	3274-8	1	Screw-HSH
16	3234-24	4	Screw-HHF
17	114-8330	1	Transaxle-Electric

Ref.	Part Number	Qty.	Description
18	104-6500	2	Drum-Brake
19	104-7290	2	Tire And Wheel ASM
19:1	104-7288	1	Wheel
19:2	104-7289	1	Tire
19:3	232-27	1	Stem-Valve
20	242-50	10	Nut-Lug
21	104-7339	2	Rod-Battery
22	107-0280	16	Washer-Lock
23	107-0738	6	Cable-Battery, Positive
24	3272-10	2	Pin-Cotter
25	283-62	2	Pin-Clevis
26	110-2647	2	Cable-Brake, Park
27	3256-22	6	Washer-Flat
28	110-1872	1	Hose-Fuel
29	107-0356	1	Decal-Motor
30	3290-379	12	Tie-Cable
31	107-0376	1	Screw-HHF
40	3290-378	2	Tie-Cable

● Not serviced separately

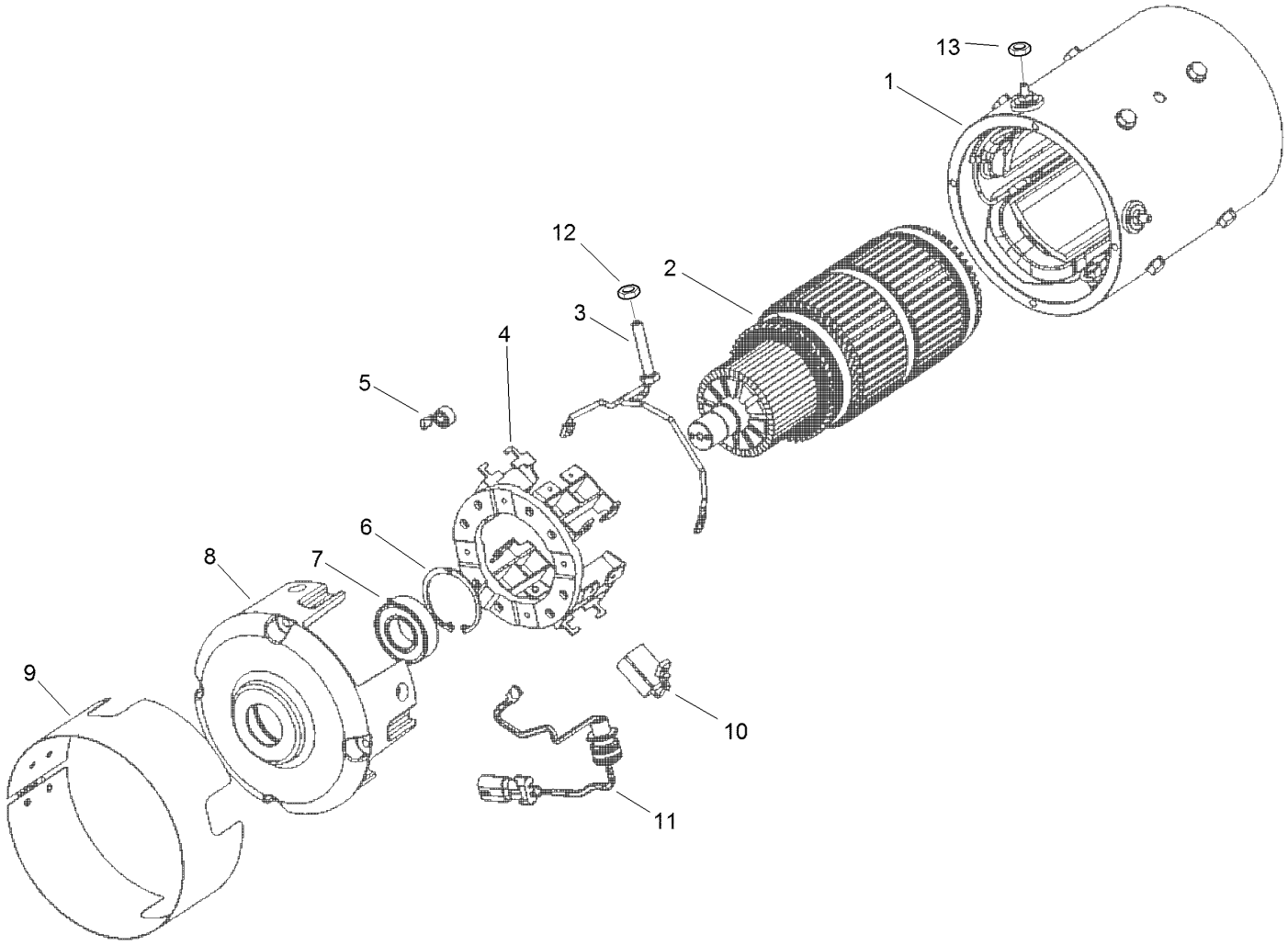

Electric Motor Assembly No. 104-7335

Ref.	Part Number	Qty.	Description
1		1	Frame And Field ASM ●
2		1	Armature ASM ●
3	108-1151	2	Brush Lead ASM
4	108-1152	1	Brush Box ASM
5	108-1153	8	Spring-Brush
6	108-1154	1	Ring-Retaining
7	108-1155	1	Bearing
8	108-1156	1	Head-Commutator
9	108-1157	1	Headband ASM
10	108-1158	8	Brush
11	108-1159	1	Thermal Sensor ASM
12	3218-13	2	Nut-Jam, Brass
13	3218-14	2	Nut-Jam, Brass

● Not serviced separately

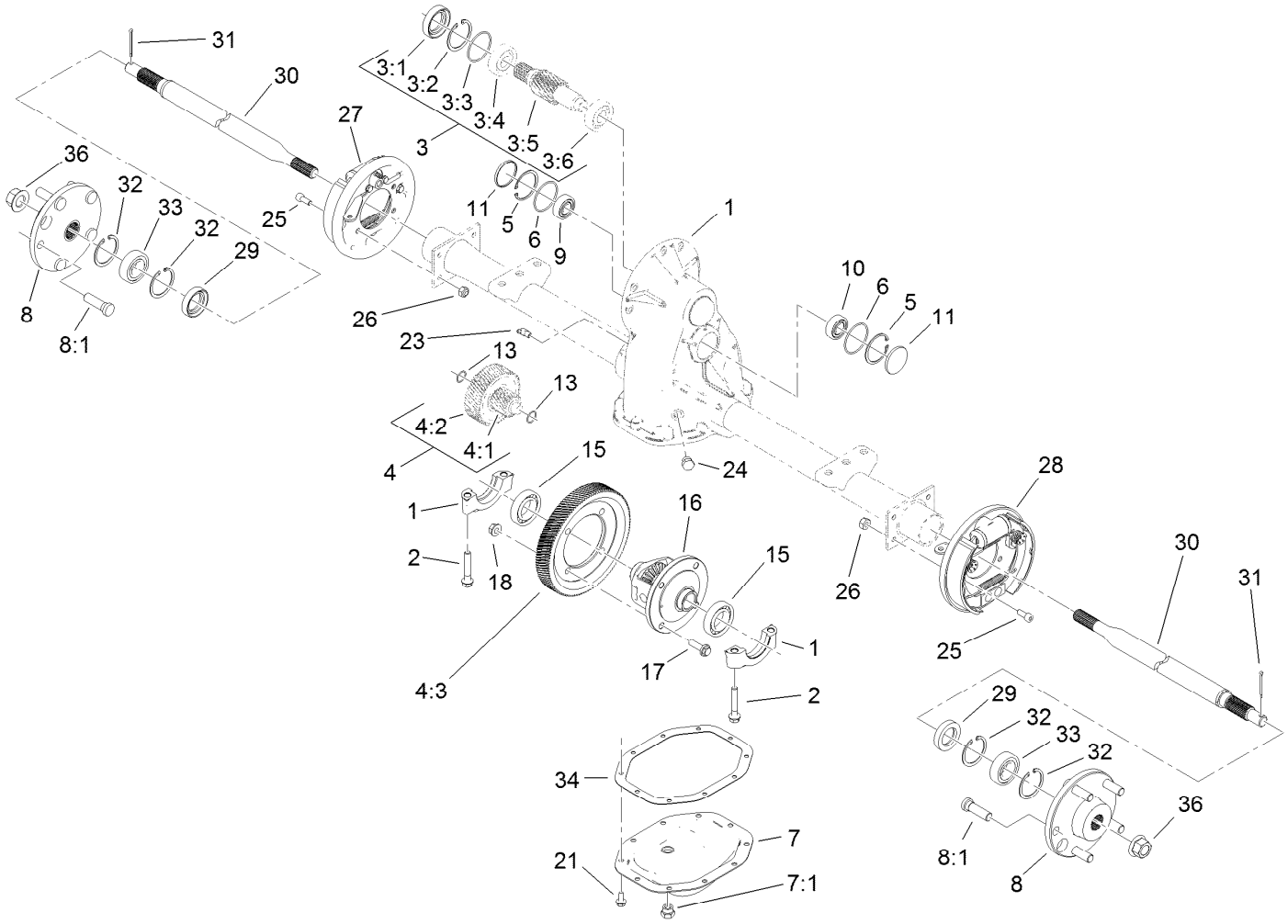

Electric Transaxle Assembly No. 114-8330

Ref.	Part Number	Qty.	Description
1		1	Transaxle ASM ●
2	108-2401	4	Bolt-Cap, Bearing
3	115-2185	1	Input Shaft Kit
3:1	108-2403	1	Seal-Oil
3:2	108-2404	1	Ring-Retaining
3:3	108-2405	1	O-Ring
3:4		1	Bearing-Ball ●
3:5		1	Shaft-Input ●
3:6		1	Bearing-Ball ●
4	108-2409	1	Internal Gear Kit
4:1		1	Shaft-Input ●
4:2		1	Gear-Intermediate ●
4:3	110-2541	1	Gear-Drive, Final
5	108-2404	2	Ring-Retaining
6	108-2405	2	O-Ring
7	108-2416	1	Cover Kit
7:1	108-2415	1	Plug-HH
8	112-3136	2	Hub ASM
8:1	112-3137	1	Bolt-Wheel

Ref.	Part Number	Qty.	Description
9	108-2406	1	Bearing-Ball
10	108-2407	1	Bearing-Ball
11	108-2408	2	Plug-Cap, End
13	108-2410	2	O-Ring
15	108-2411	2	Bearing-Ball
16	112-3138	1	Differential ASM
17	108-2413	4	Screw-Hex
18	108-2414	4	Nut-Lock
21	108-2427	10	Screw-Tapping
23	108-2428	1	Elbow-90 Degree
24	108-2429	1	Plug-HH
25	112-3139	8	Screw-HSH
26	108-2418	8	Nut-Lock
27	114-8332	1	LH Brake ASM
28	114-8331	1	RH Brake ASM
29	112-3140	2	Seal-Oil
30	112-3141	2	Shaft-Axle
31	3272-12	2	Pin-Cotter
32	108-2424	4	Ring-Retaining

● Not serviced separately

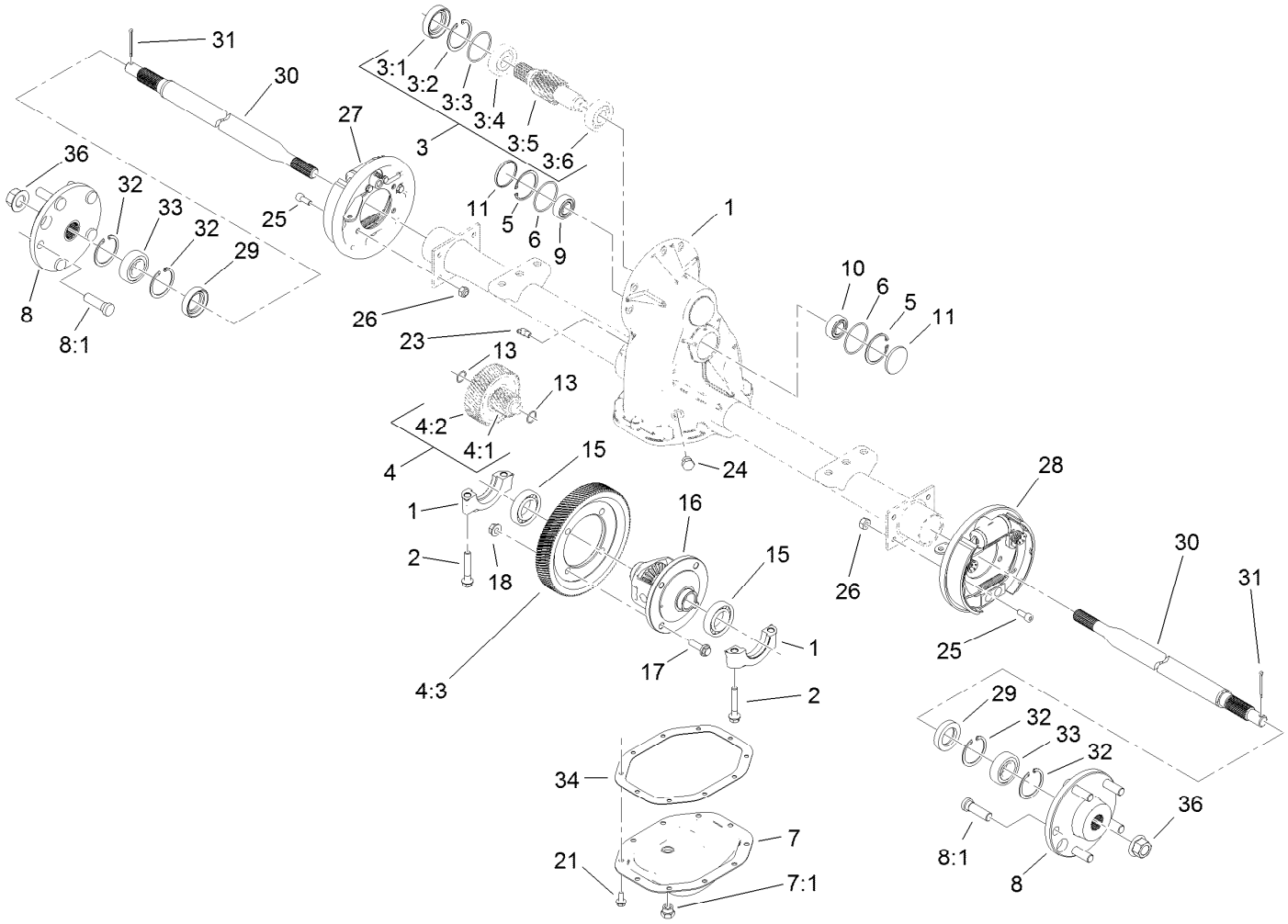

Electric Transaxle Assembly No. 114-8330 (continued)

Ref.	Part Number	Qty.	Description
33	108-2425	2	Bearing-Ball

Ref.	Part Number	Qty.	Description
34	108-3148	1	Gasket
36	112-3142	2	Nut-HF

● Not serviced separately

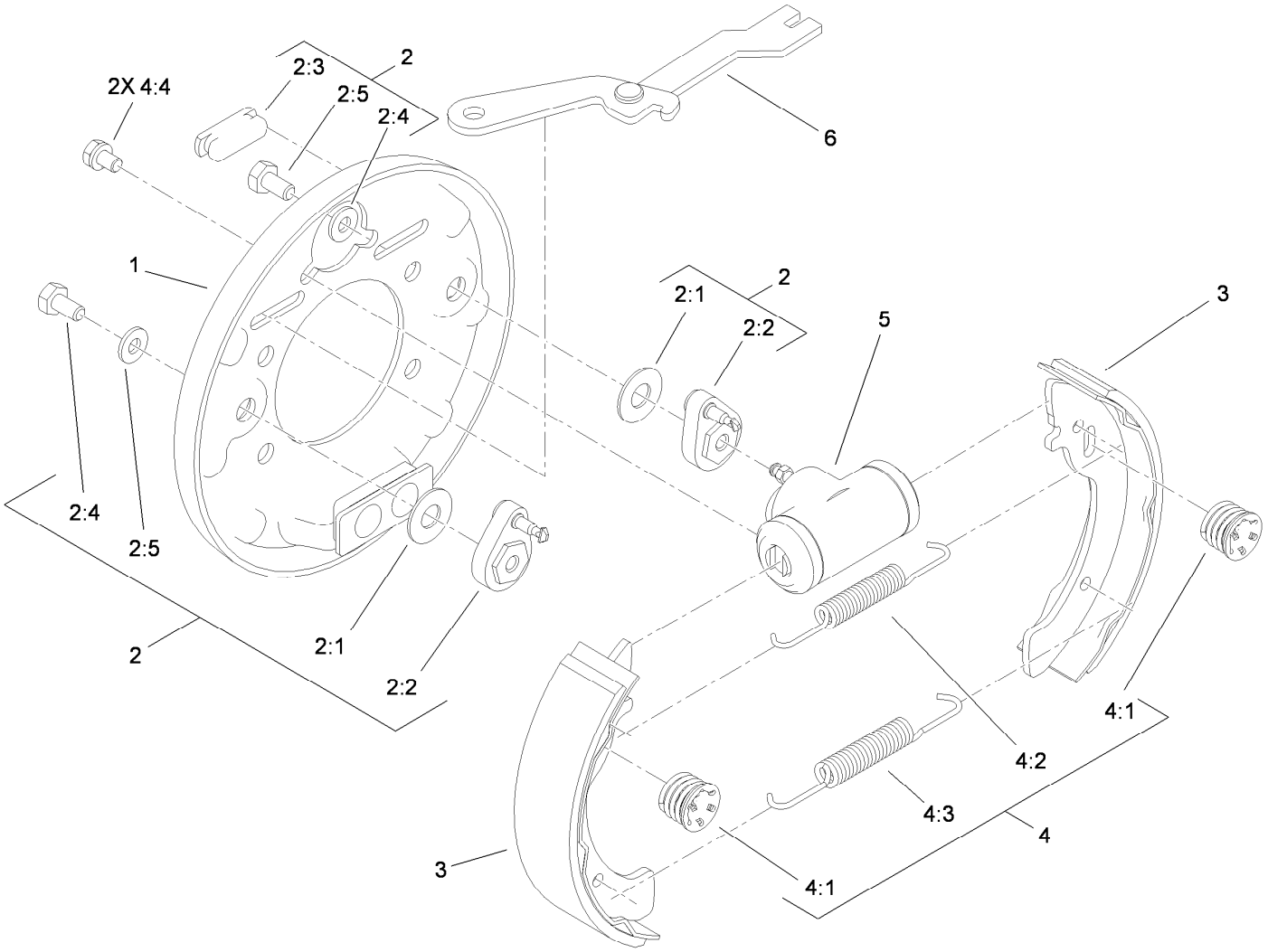

LH Rear Brake Assembly No. 114-8332

Ref.	Part Number	Qty.	Description
1	100-8586	1	Backing Plate ASM
2	104-6820	1	Adjuster Kit
2:1	100-8585	2	Washer-Bellville
2:2	100-8588	2	Adjuster Lever ASM
2:3	100-8584	2	Cover-Dust
2:4		2	Washer ●
2:5		2	Bolt ●
3	104-6818	4	Shoe And Lining Kit
4	104-6819	1	Hardware Kit
4:1	100-8583	2	Shoe Hold Down Spring ASM
4:2	100-8581	2	Spring-Upper
4:3	100-8582	2	Spring-Lower
4:4		2	Bolt And Washer ●
5	114-8333	1	Wheel Cylinder ASM
6	104-6825	1	LH Park Brake Lever ASM

● Not serviced separately

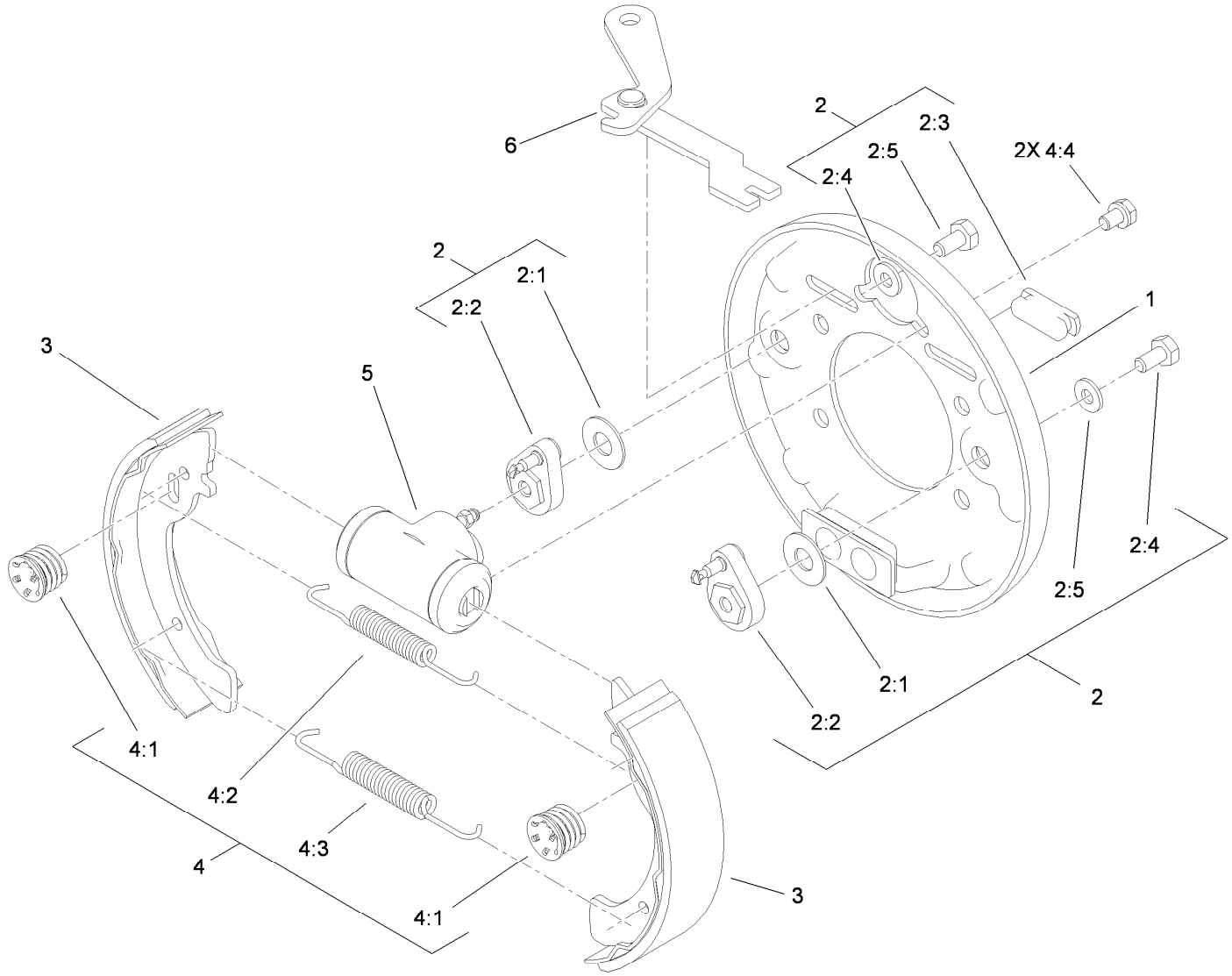

RH Rear Brake Assembly No. 114-8331

Ref.	*Part Number*	*Qty.*	*Description*
1	100-8586	1	Backing Plate ASM
2	104-6820	1	Adjuster Kit
2:1	100-8585	2	Washer-Bellville
2:2	100-8588	2	Adjuster Lever ASM
2:3	100-8584	2	Cover-Dust
2:4		2	Washer ●
2:5		2	Bolt ●
3	104-6818	4	Shoe And Lining Kit
4	104-6819	1	Hardware Kit
4:1	100-8583	2	Shoe Hold Down Spring ASM
4:2	100-8581	2	Spring-Upper
4:3	100-8582	2	Spring-Lower
4:4		2	Bolt And Washer ●
5	114-8333	1	Wheel Cylinder ASM
6	104-6826	1	RH Park Brake Lever ASM

● Not serviced separately

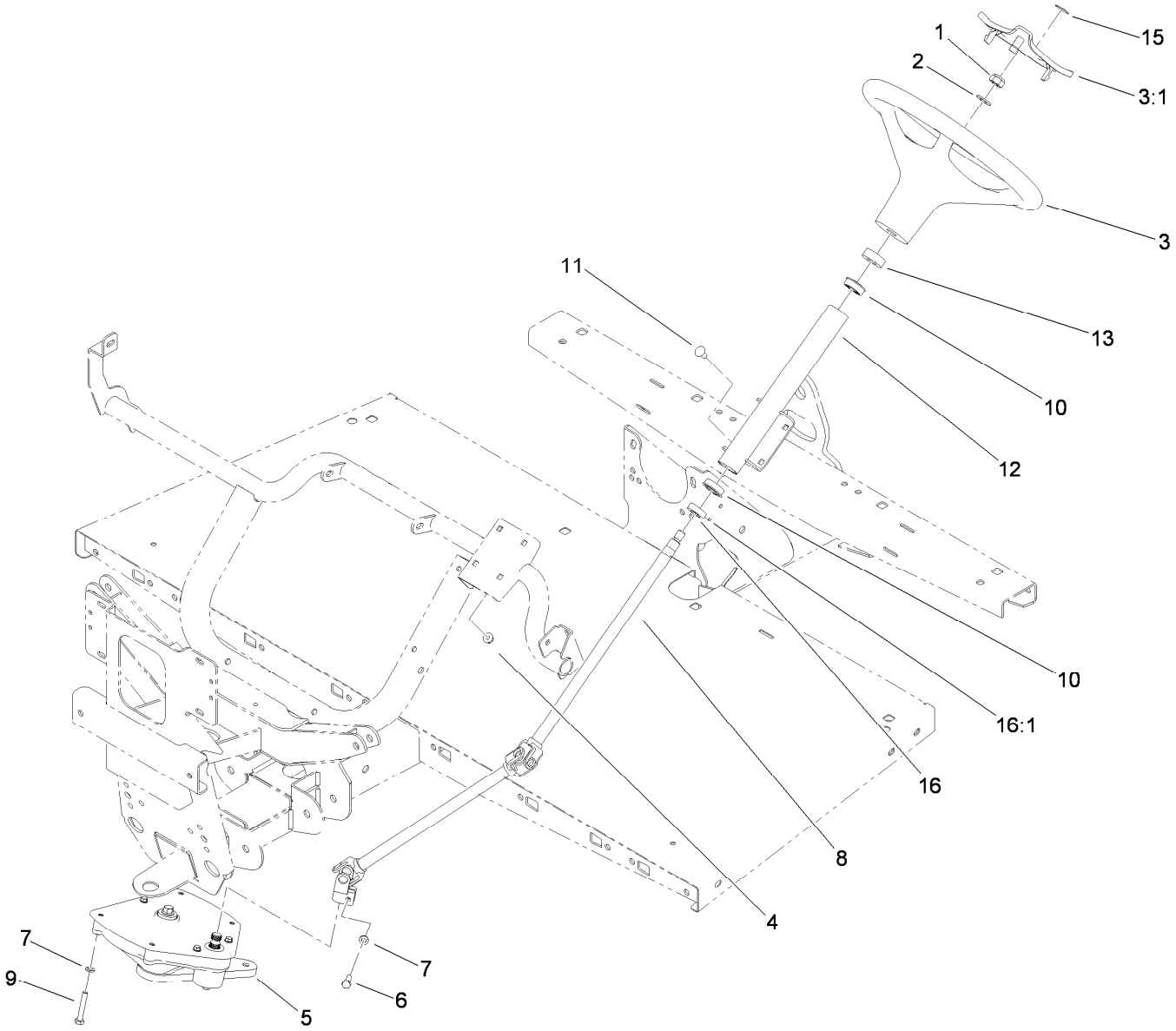

Upper Steering Assembly

Ref.	Part Number	Qty.	Description
1	119-9493	1	Nut-Lock, NI
2	3256-26	1	Washer-Flat
3	98-1471	1	Wheel-Steering
3:1	98-1468	1	Cover-Wheel, Steering
4	104-8300	4	Nut-Flange, NI
5	112-3130	1	Steering Box ASM
6	48-7730	1	Screw-Cap, HH
7	3253-4	5	Washer-Lock
8	112-3355	1	Steering Shaft

Ref.	Part Number	Qty.	Description
9	112-3305	4	Screw-HH
10	112-3262	2	Bearing
11	3230-1	4	Bolt-CARR
12	112-3264-03	1	Column ASM
13	21-9260	1	Cover-Dust
15	98-1459	1	Decal
16	111383	1	Collar
16:1	3245-32	1	Screw-HSH

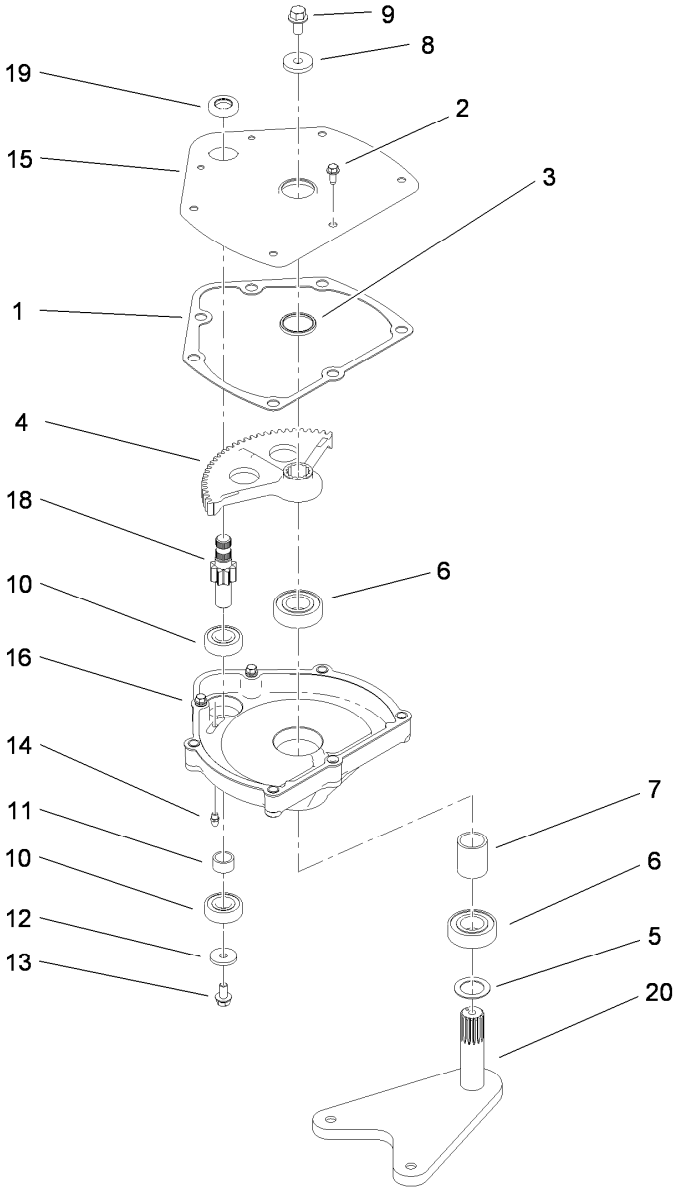

Steering Box Assembly No. 112-3130

Ref.	Part Number	Qty.	Description
1	94-2135	1	Gasket
2	32144-10	3	Screw-HWH
3	103118	1	Seal
4	99-7843	1	Sector-Gear
5	3256-42	1	Washer-Flat
6	251-82	2	Bearing-Ball
7	112-2917	1	Spacer
8	104-6563	1	Washer-Stepped
9	104-7156	1	Screw-HHF
10	38-7820	2	Bearing-Ball
11	94-2217	1	Spacer-Shaft, Input
12	1-613235	1	Washer
13	98-3498	1	Screw-HH
14	302-5	1	Fitting-Grease
15	112-2918-03	1	Cover-Housing, Steering
16	114-8309	1	Housing-Steering
18	115-7726	1	Gear-Pinion
19	99-7657	1	Seal-Oil
20	112-3096-03	1	Pitman Arm ASM

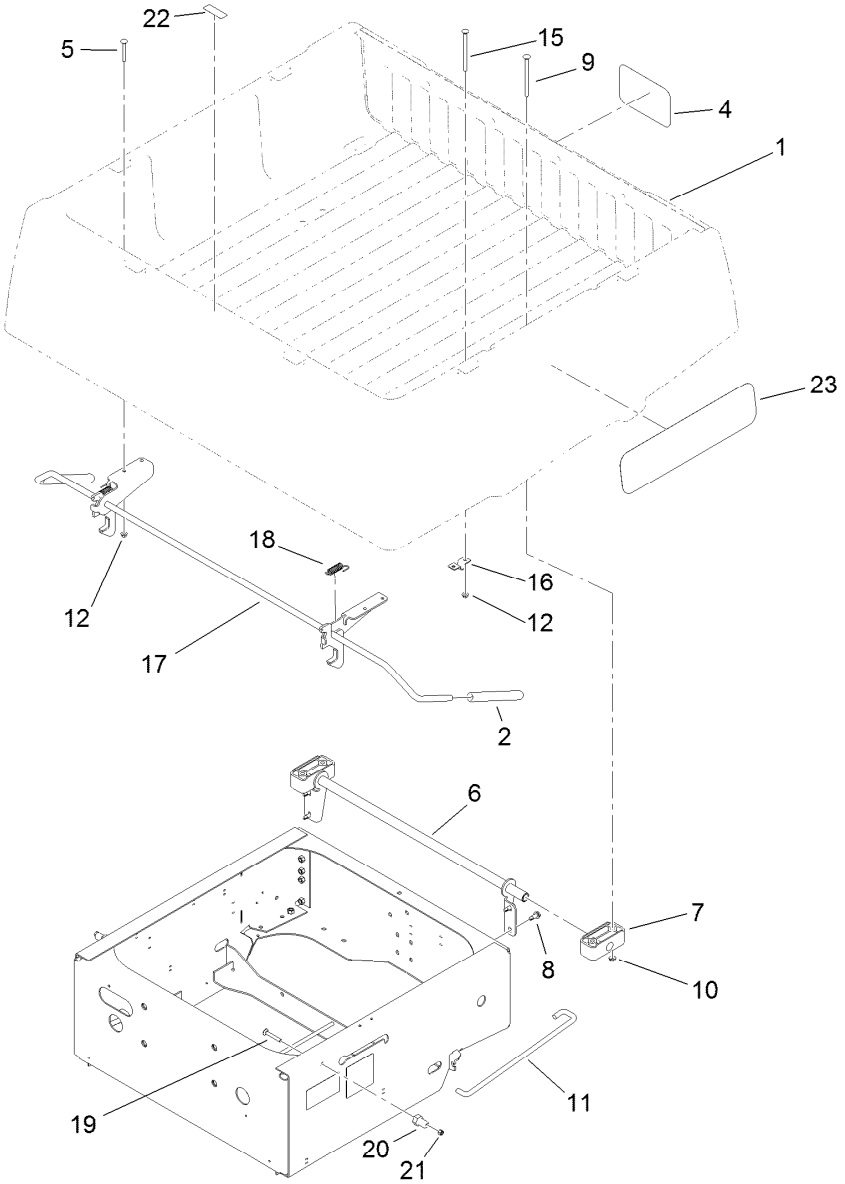

Box and Tailgate Installation Assembly

Ref.	Part Number	Qty.	Description
1	119-9710	1	Cargo Bed Service ASM
2	119-9627	2	Grip-Handle
4	104-7213	1	Decal
5	3230-8	4	Screw-CARR
6	119-0848-03	1	Pivot Bracket ASM
7	119-0835	2	Bushing-Pivot
8	105-6245	4	Screw-Tapping
9	109-6795	4	Bolt-CARR
10	3290-357	4	Nut-HHF, Whiz
11	119-0844	1	Rod-Prop

Ref.	Part Number	Qty.	Description
12	32128-20	6	Nut-HF
15	119-0914	2	Bolt-CARR
16	99-7896	1	Bracket-U, Prop Rod
17	119-0837	1	Latch ASM
18	5-7290	2	Spring-Tension
19	3230-7	2	Screw-CARR
20	104-7248	2	Pin-Latch
21	3296-29	2	Nut-Lock, NI
22	115-7739	1	Decal-No Riders
23	119-9451	2	Decal

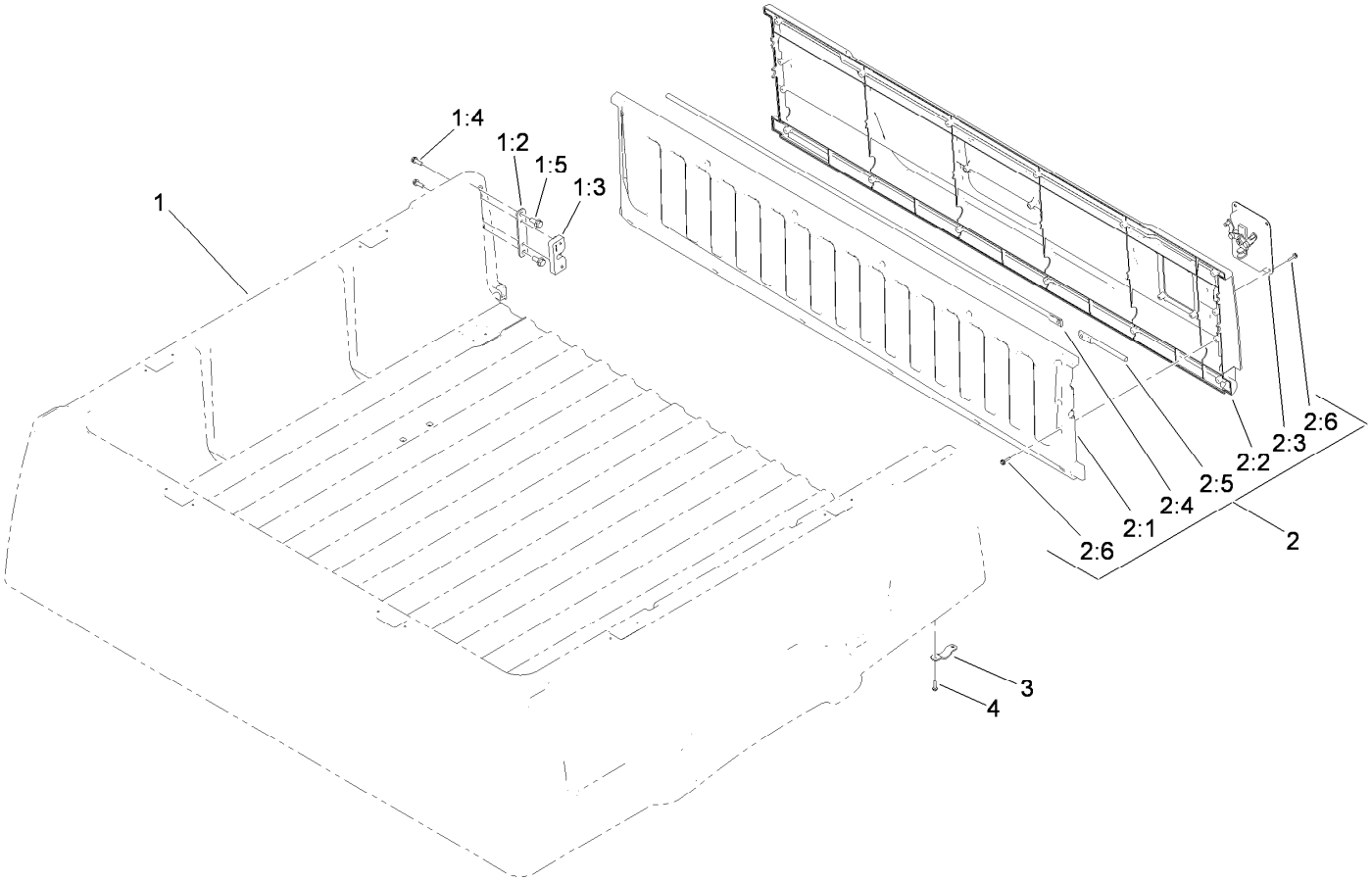

Cargo Bed Service Assembly No. 119-9710

Ref.	Part Number	Qty.	Description
1		1	Cargo Bed W/ Strikes ●
1:2	119-0838	2	Mount-Striker
1:3	119-0892	2	Strike-Latch
1:4	3234-47	4	Screw-HHF
1:5	32105-15	4	Screw
2		1	Tailgate ASM ●
2:1	119-0839	1	Tailgate Inner
2:2	119-0840	1	Tailgate Outer
2:3	119-0891	1	Handle-Latch
2:4	119-0842	1	Rod-Latch, RH
2:5	119-0843	1	Rod-Latch, LH
2:6	98-1375	20	Screw-HWH
3	119-0849	2	Retainer-Tailgate
4	98-1375	4	Screw-HWH

● Not serviced separately

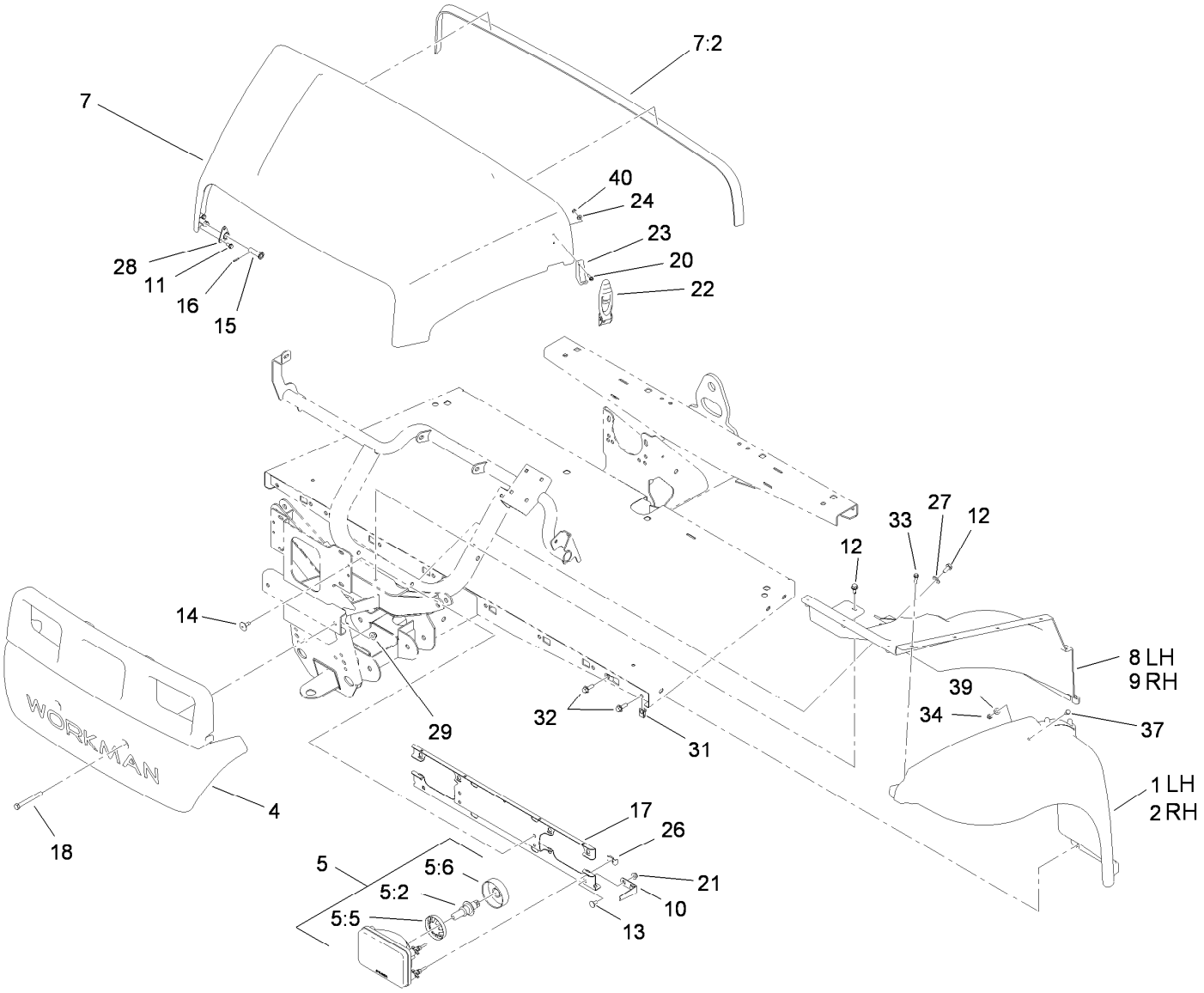

Hood and Fender Assembly

Ref.	Part Number	Qty.	Description
1	112-3371	1	Fender-LH
2	112-3370	1	Fender-RH
4	112-3365	1	Bumper
5	115-7617	2	Headlight ASM
5:2	115-7618	1	Bulb-24V
5:5	115-7667	1	Retainer-Headlight
5:6	115-7668	1	Boot-Headlight
7	115-7636	1	Hood ASM
7:2	115-7635	1	Seal-Foam
8	112-3369	1	Well-Fender, LH
9	112-3368	1	Well-Fender, RH
10	112-3373	2	Keeper-Pivot, Hood
11	46-8093	6	Screw-Plastite
12	32104-32	4	Screw-HWH
13	3230-18	2	Screw-CARR
14	146489	4	Rivet
15	117-5094	2	Pin-Clevis
16	32121-50	2	Pin-Spring

Ref.	Part Number	Qty.	Description
17	119-0841-03	1	Bracket-Headlight
18	115-7660	2	Screw-HHF
20	32105-13	4	Screw-HWH
21	32128-20	2	Nut-HF
22	115-2416	2	Latch-Rubber
23	103-2897	2	Latch-Catch
24	3256-14	4	Washer-Flat
26	115-2408	6	Clip-Speed
27	3256-71	2	Washer-Flat
28	112-3308	2	Retainer-Pin
29	104-8301	2	Nut-Flange, NI
31	112-3306	10	Nut
32	3234-29	10	Screw-HHF
33	46-8091	20	Screw-HWH
34	3296-42	2	Nut-Lock, NI
37	321-39	2	Screw-HH
39	3256-22	2	Washer-Flat
40	3296-2	4	Nut-Lock, NI

Attachments and Accessories

For 07299 Workman MDE Utility Vehicle

Product Name	Model/Part
Rear Lift Kit	07261
Roll-Over Protection System	07276
Receiver Hitch Kit	07278
12V Power Plug Adapter Kit	07318
Canopy Kit	07324
Solid Windshield Kit	07325
Folding Windshield Kit	07326
Snow Plow	07327
Hard Cab	07328
Heavy-Duty Bumper Kit	07329
Heavy-Duty Brush Guard and Bumper Kit	07338
Sliding Window Door Kit	07352
Fixed Window Door Kit	07353
Electric Bed Lift Kit, 2011 and After Workman MDE Utility Vehicle	07382
Wheel-5 Bolt	104-6889
Tire-AT 489, 24x10.5-10	104-7061
Tire-AT 489, 22x9.5-10	104-7062
20 foot Cordset Kit (DC)	108-3071
48V Battery Charger	115-7785
Lift Wire Harness Kit	115-7823
Horn Kit	115-7827
Replacement Front Spring Kit	117-4847
Accessory Installation Kit, Espar Heater Kit for Workman MDE Utility Vehicle	117-4968
Potentiometer Kit	117-5085
Cord-AC (US/CANADA)	119-0661
Tire And Wheel Asm	119-0751
Side Mirror Kit	119-9546
Lanyard Kit, 2011 and After Workman MD Series Utility Vehicle	119-9590
Brake and Signal Light Kit, 2011 and After Workman MD Series Utility Vehicle	119-9603
Stake Pocket Adapter Kit, 2011 and After Workman MD Series Utility Vehicle	119-9604
Tie-Down Kit, 2011 and After Workman MD Series Utility Vehicle	119-9605
Bed Retrofit Kit, 2010 and Before Workman MD Series Utility Vehicle	119-9606

TORO®

Count on it.