Form No. 3366-134 Rev B

TORO®

Count on it.

Operator's Manual

Wheelmaster 320-D Compact Utility Loader

Model No. 22337CP—Serial No. 311000001 and Up

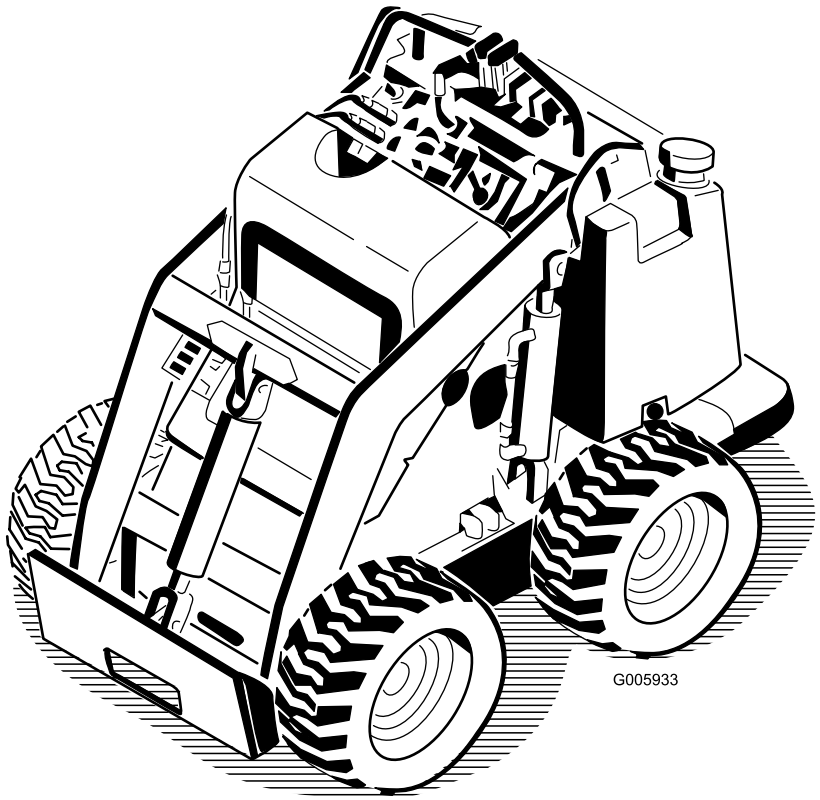

To register your product or download an *Operator's Manual* or *Parts Catalog* at no charge, go to www.Toro.com.

Original Instructions (EN)

⚠ DANGER

There may be buried power, gas, and/or telephone lines in the work area. Shock or explosion may occur if you dig into them.

Have the property or work area marked for buried lines and do not dig in marked areas. Contact your local marking service or utility company to have the property marked (for example, in Australia, call 1100 for the nationwide marking service).

Introduction

This machine is a compact utility loader intended for use in various earth and materials moving activities for landscaping and construction work. It is designed to operate a wide variety of attachments each of which perform a specialized function.

Read this information carefully to learn how to operate and maintain your product properly and to avoid injury and product damage. You are responsible for operating the product properly and safely.

You may contact Toro directly at www.Toro.com for product and accessory information, help finding a dealer, or to register your product.

Whenever you need service, genuine Toro parts, or additional information, contact an Authorized Service Dealer or Toro Customer Service and have the model and serial numbers of your product ready. Figure 1 identifies the location of the model and serial numbers on the product. Write the numbers in the space provided.

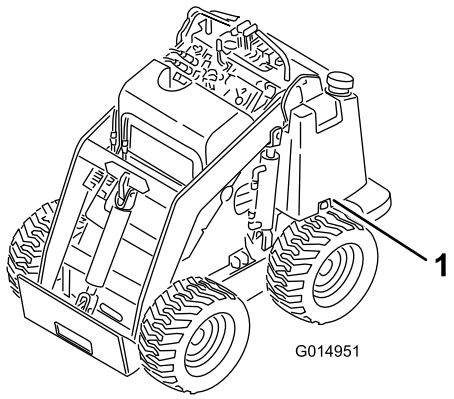

Figure 1

1. Model and serial number location

Model No. _____

Serial No. _____

This manual identifies potential hazards and has safety messages identified by the safety alert symbol (Figure 2), which signals a hazard that may cause serious injury or death if you do not follow the recommended precautions.



Figure 2

1. Safety alert symbol

This manual uses 2 other words to highlight information. **Important** calls attention to special mechanical information and **Note** emphasizes general information worthy of special attention.

Contents

Introduction 2
Safety 3
- Safe Operating Practices 3
- Stability Data 7
- Slope Indicator 8
- Safety and Instructional Decals 9

Setup 12
- 1 Installing the Valve Lever 12
- 2 Checking Fluid Levels 12
- 3 Installing the Battery 12

Product Overview 14
- Controls 14
- Specifications 17
- Attachments/Accessories 17

Operation 18
- Filling the Fuel Tank 18
- Draining Water from the Fuel Filter 18
- Checking the Engine Oil Level 19
- Checking the Engine Coolant Level 19
- Removing Debris from the Traction Unit 19
- Checking the Hydraulic Fluid Level 20
- Testing the Parking Brake 20
- Checking the Tire Pressure 21
- Starting the Engine 21
- Driving the Traction Unit 21
- Stopping the Traction Unit/Engine 21

© 2010—The Toro® Company
8111 Lyndale Avenue South
Bloomington, MN 55420

Contact us at www.Toro.com.
Printed in the USA.
All Rights Reserved

Moving a Non-functioning Traction Unit 22
Using the Cylinder Locks 22
Using Attachments 23
Securing the Traction Unit for Transport 24
Adjusting the Thigh Support 24
Maintenance 26
Recommended Maintenance Schedule(s) 26
Premaintenance Procedures 27
Opening the Access Covers 27
Lubrication 28
Greasing the Traction Unit 28
Engine Maintenance 28
Servicing the Air Cleaner 28
Servicing the Engine Oil 29
Fuel System Maintenance 30
Changing the Fuel Filter 30
Bleeding the Fuel System 30
Draining the Fuel Tank 31
Electrical System Maintenance 32
Servicing the Battery 32
Hydraulic System Maintenance 34
Replacing the Hydraulic Filter 34
Changing the Hydraulic Fluid 34
Checking the Hydraulic Lines 35
Storage 35
Troubleshooting 36
Schematics 39

Safety

Improper use or maintenance by the operator or owner can result in injury. To reduce the potential for injury, comply with these safety instructions and always pay attention to the safety alert symbol ⚠, which means: *Caution*, *Warning*, or *Danger*—personal safety instruction. Failure to comply with the instruction may result in personal injury or death.

Safe Operating Practices

This product is capable of amputating hands and feet. Always follow all safety instructions to avoid serious injury or death.

⚠ WARNING

Engine exhaust contains carbon monoxide, an odorless, deadly poison that can kill you.

Do not run the engine indoors or in an enclosed area.

Training

- Read the *Operator's Manual* and other training material. If the operator(s) or mechanic(s) can not read English, it is the owner's responsibility to explain this material to them.
- Become familiar with the safe operation of the equipment, operator controls, and safety signs.
- All operators and mechanics should be trained. The owner is responsible for training the users.
- Never let children or untrained people operate or service the equipment. Local regulations may restrict the age of the operator.
- The owner/user can prevent and is responsible for accidents or injuries occurring to himself or herself, other people or property.

Preparation

⚠ DANGER

There may be buried power, gas, and/or telephone lines in the work area. Shock or explosion may occur if you dig into them.

Have the property or work area marked for buried lines and do not dig in marked areas. Contact your local marking service or utility company to have the property marked (for example, in Australia, call 1100 for the nationwide marking service).

- Evaluate the terrain to determine what accessories and attachments are needed to properly and safely perform the job. Only use accessories and attachments approved by the manufacturer.
- Wear appropriate clothing including hard hat, safety glasses, long pants, safety shoes, and hearing protection. Long hair, loose clothing or jewelry may get tangled in moving parts.
- Inspect the area where the equipment is to be used and remove all objects such as rocks, toys, and wire which can be thrown by the machine.
- Use extra care when handling fuels. They are flammable and vapors are explosive.
  - Use only an approved container
  - Never remove the fuel cap or add fuel with the engine running. Allow the engine to cool before refueling. Do not smoke.
  - Never refuel or drain the machine indoors.
- Check that the operator's presence controls, safety switches, and shields are attached and functioning properly. Do not operate unless they are functioning properly.

Operation

- Never run an engine in an enclosed area.
- Only operate in good light, keeping away from holes and hidden hazards.
- Be sure all drives are in neutral and parking brake is engaged before starting the engine. Only start the engine from the operator's position.
- Slow down and use extra care on hillsides. Be sure to travel in the recommended direction on hillsides. Turf conditions can affect the machine's stability.
- Slow down and use caution when making turns and when changing directions on slopes.
- Never operate with the guards not securely in place. Be sure all interlocks are attached, adjusted properly, and functioning property.
- Do not change the engine governor setting or overspeed the engine.
- Stop on level ground, lower implements, disengage the auxiliary hydraulics, engage parking brake, shut off the engine before leaving the operator's position for any reason.
- Keep hands and feet away from moving attachments.
- Look behind and down before backing up to be sure of a clear path.
- Never carry passengers and keep pets and bystanders away.
- Slow down and use caution when making turns and crossing roads and sidewalks.
- Do not operate the machine under the influence of alcohol or drugs.
- Use care when loading or unloading the machine into a trailer or truck.
- Use care when approaching blind corners, shrubs, trees, or other objects that may obscure vision.
- Read all attachment manuals.
- Ensure that the area is clear of other people before operating the traction unit. Stop the traction unit if anyone enters the area.
- Never leave a running traction unit unattended. Always lower the loader arms, stop the engine, set the parking brake, and remove the key before leaving.
- Do not exceed the rated operating capacity, as the traction unit may become unstable which may result in loss of control.
- Do not carry a load with the arms raised. Always carry loads close to the ground.
- Do not overload the attachment and always keep the load level when raising the loader arms. Logs, boards, and other items could roll down the loader arms, injuring you.
- Never jerk the controls; use a steady motion.
- Watch for traffic when operating near or crossing roadways.
- Do not touch parts which may be hot from operation. Allow them to cool before attempting to maintain, adjust, or service.
- Check for overhead clearances (i.e. branches, doorways, electrical wires) before driving under any objects and do not contact them.
- Ensure that you operate the traction unit in areas where there are no obstacles in close proximity to the operator. Failure to maintain adequate distance from trees, walls, and other barriers may result in injury as the traction unit backs up during operation if the operator is not attentive to the surroundings. Only operate the unit in areas where there is sufficient clearance for the operator to safely maneuver the product.
- Before digging, have the area marked for underground utilities, and do not dig in marked areas.
- Locate the pinch point areas marked on the traction unit and attachments and keep hands and feet away from these areas.

- Before operating the traction unit with an attachment, ensure that the attachment is properly installed.
- Do not place your feet under the platform.

Slope Operation

Slopes are a major factor related to loss-of-control and tip-over accidents, which can result in severe injury or death. All slopes require extra caution.

- Do not operate the traction unit on hillsides or slopes exceeding the angles recommended in the Stability Data section in Stability Data (page 7), and those in the attachment *Operator's Manual*. See also the Slope Indicator (page 8).
- **Operate up and down slopes with the heavy end of the traction unit uphill.** Weight distribution changes. An empty bucket will make the rear of the traction unit the heavy end, and a full bucket will make the front of the traction unit the heavy end. Most other attachments will make the front of traction unit the heavy end.
- Raising the loader arms on a slope will affect the stability of the machine. Whenever possible, keep the loader arms in the lowered position when on slopes.
- Removing an attachment on a slope will make the rear of the traction unit heavy. Refer to the Stability Data section in Stability Data (page 7), to determine whether the attachment can be safely removed on the slope.
- Remove obstacles such as rocks, tree limbs, etc. from the work area. Watch for holes, ruts, or bumps, as uneven terrain could overturn the traction unit. Tall grass can hide obstacles.
- Use only Toro-approved attachments. Attachments can change the stability and the operating characteristics of the traction unit. Warranty may be voided if used with unapproved attachments.
- Keep all movements on slopes slow and gradual. Do not make sudden changes in speed or direction.
- Avoid starting or stopping on a slope. If the traction unit loses traction, proceed slowly, straight down the slope.
- Avoid turning on slopes. If you must turn, turn slowly and keep the heavy end of the traction unit uphill.
- Do not operate near drop-offs, ditches, or embankments. The traction unit could suddenly turn over if a wheel goes over the edge of a cliff or ditch, or if an edge caves in.
- Do not operate on wet grass. Reduced traction could cause sliding.
- Do not park the traction unit on a hillside or slope without lowering the attachment to the ground and chocking the wheels.
- Do not try to stabilize the traction unit by putting your foot on the ground.

Maintenance and Storage

- Disengage the auxiliary hydraulics, lower the attachment, set the parking brake, stop the engine, and remove the key. Wait for all movement to stop before adjusting, cleaning, or repairing.
- Clean debris from attachments, drives, mufflers, and engine to help prevent fires. Clean up oil or fuel spillage.
- Let the engine cool before storing and do not store near flame.
- Do not store fuel near flames or drain indoors.
- Park the machine on level ground. Never allow untrained personnel to service the machine.
- Use jack stands to support components when required.
- Carefully release pressure from components with stored energy.
- Disconnect the battery before making any repairs. Disconnect the negative terminal first and the positive last. Reconnect positive first and negative last.
- Keep hands and feet away from moving parts. If possible, do not make adjustments with the engine running.
- Charge batteries in an open well ventilated area, away from spark and flames. Unplug the charger before connecting or disconnecting it from the battery. Wear protective clothing and use insulated tools.
- Keep all parts in good working condition and all hardware tightened. Replace all worn or damaged decals.
- If any maintenance or repair requires the loader arms to be in the raised position, secure the arms in the raised position with the hydraulic cylinder locks.
- Keep nuts and bolts tight. Keep equipment in good condition.
- Never tamper with safety devices.
- Keep the traction unit free of grass, leaves, or other debris buildup. Clean up oil or fuel spillage. Allow the traction unit to cool before storing.

- Use extra care when handling fuels. They are flammable and vapors are explosive.
  - Use only an approved container.
  - Never remove the fuel cap or add fuel when the engine is running. Allow the engine to cool before refueling. Do not smoke.
  - Never refuel the traction unit indoors.
  - Never store the traction unit or fuel container inside where there is an open flame, such as near a water heater or furnace.
  - Never fill a container while it is inside a vehicle, trunk, pickup bed, or any surface other than the ground.
  - Keep container nozzle in contact with the tank during filling.
- Stop and inspect the equipment if you strike an object. Make any necessary repairs before restarting.
- Use only genuine Toro replacement parts to ensure that original standards are maintained.
- Battery acid is poisonous and can cause burns. Avoid contact with skin, eyes, and clothing. Protect your face, eyes, and clothing when working with a battery.
- Battery gases can explode. Keep cigarettes, sparks and flames away from the battery.
- Keep your body and hands away from pin hole leaks or nozzles that eject high pressure hydraulic fluid. Use cardboard or paper to find hydraulic leaks; never use your hands. Hydraulic fluid escaping under pressure can penetrate skin and cause injury requiring surgery within a few hours by a qualified surgeon or gangrene may result.

Stability Data

The following tables list the maximum slope recommended for the traction unit in the positions listed in the tables. Slopes over the listed degree may cause the traction unit to become unstable. The data in the tables assume that the loader arms are fully lowered; raised arms may affect the stability.

In each attachment manual is a set of three stability ratings, one for each hill position. To determine the maximum slope you can traverse with the attachment installed, find the degree of slope that corresponds to the stability ratings of the attachment. Example: If the attachment has a Front Uphill rating of B, a Rear Uphill rating of D, and a Side Uphill rating of C, then you could drive forward up an 18° slope, rearward up a 10° slope, or sideways on a 14° slope, as listed in the following table.

Configuration	Maximum Recommended Slope when Operating with: Front Uphill 	Rear Uphill 	Side Uphill 
Traction unit without attachment	7°	20°	17°
Traction unit with counterweight, without attachment	5°	21°	17°
Traction unit with an attachment rated with one of the following stability ratings for each slope position:*			
A	25°	25°	20°
B	18°	19°	18°
C	15°	16°	14°
D	10°	10°	9°
E	5°	5°	5°

Slope Indicator

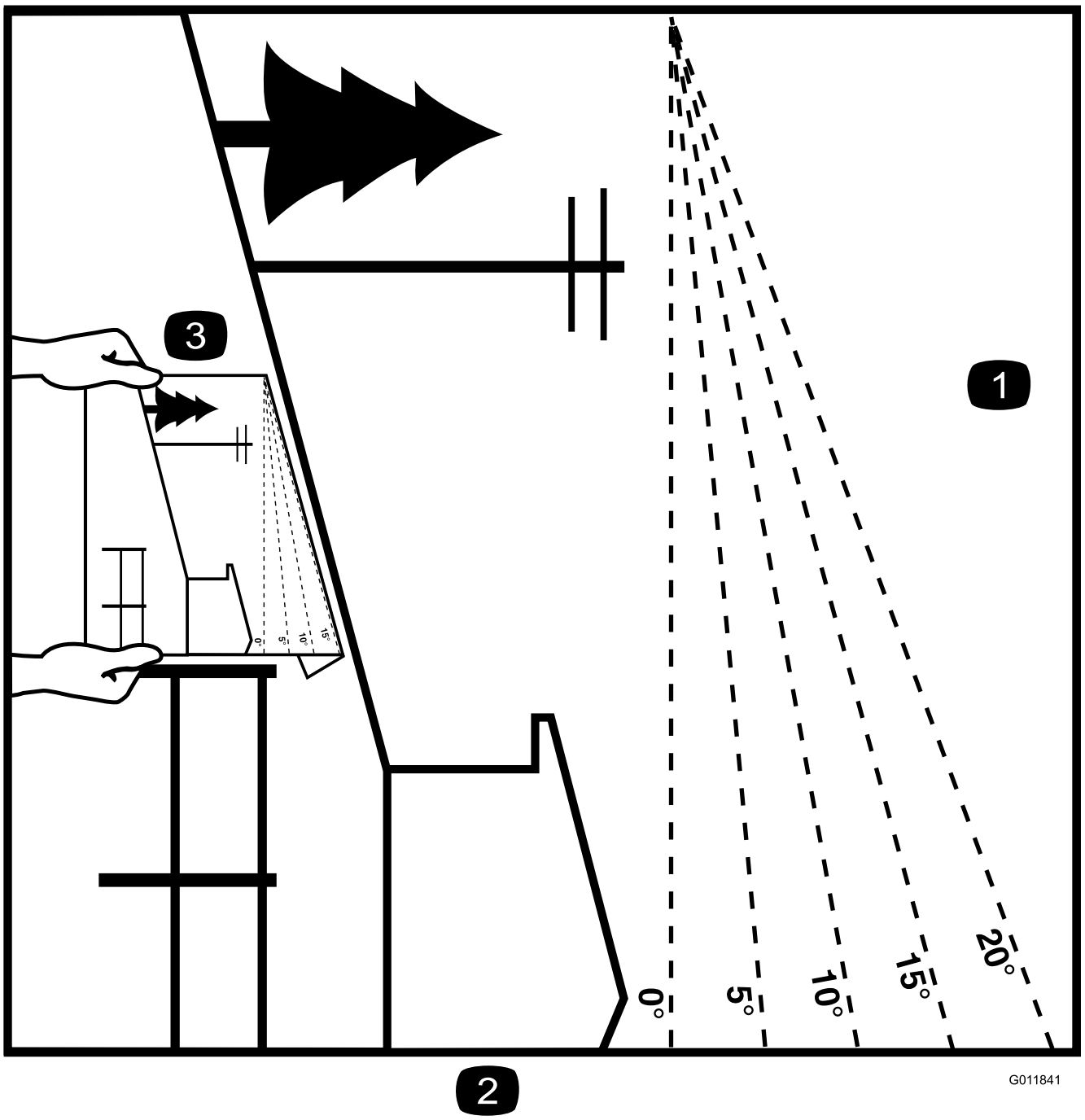

Figure 3

This page may be copied for personal use.

1. To determine the maximum slope you can safely operate the machine on, refer to the Stability Data section. Use the slope indicator to determine the degree of slope of hills before operating. **Do not operate this machine on a slope greater than that specified in the Stability Data section.** Fold along the appropriate line to match the recommended slope.
2. Align this edge with a vertical surface, a tree, building, fence pole, etc.
3. Example of how to compare slope with folded edge.

Safety and Instructional Decals

Safety decals and instructions are easily visible to the operator and are located near any area of potential danger. Replace any decal that is damaged or lost.

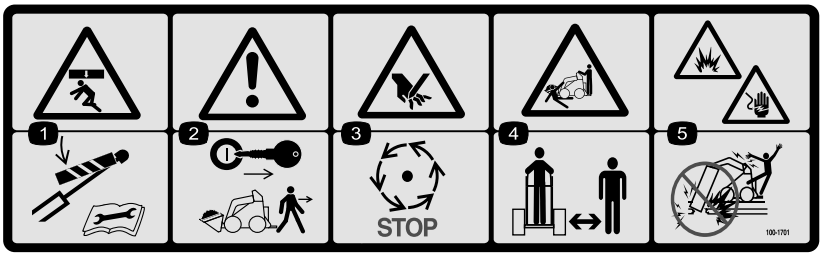

100-1701

1. Crushing hazard—install the cylinder lock and read the instructions before servicing or performing maintenance.
2. Warning—remove the ignition key and lower the loader arms before leaving the machine.
3. Cutting hazard of hand—wait for moving parts to stop.
4. Crushing/dismemberment hazard of bystanders—keep bystanders a safe distance from the machine.
5. Explosion and electrical shock hazards—do not dig in areas with buried gas or electrical lines.

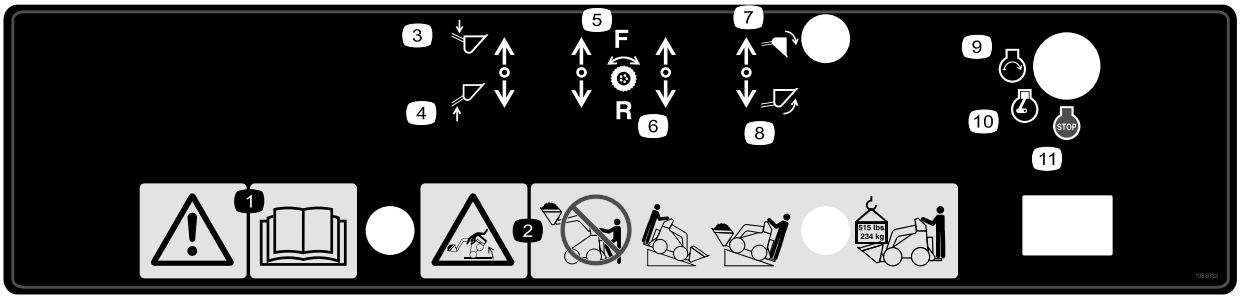

108-9733

1. Warning—read the *Operator's Manual.*
2. Tipping hazard—do not step off operator platform with load raised, always operate with the heavy end of the machine pointed uphill, carry loads low, maximum load is 515 lbs (234 kg).
3. Arm lift–down
4. Arm lift— up
5. Wheel drive—forward
6. Wheel drive—reverse
7. Bucket tilt— down
8. Bucket tilt—up
9. Engine—start
10. Engine—run
11. Engine—stop

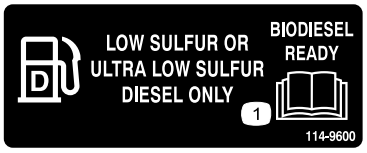

114–9600

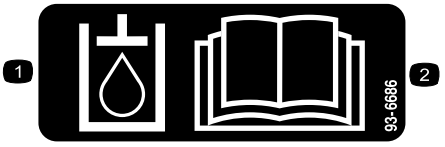

93-6686

1. Hydraulic oil
2. Read the *Operator's Manual.*

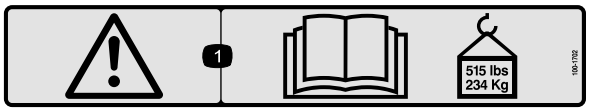

100-1702

1. Warning—read the *Operator's Manual*; maximum load rating of 515 lb. (234 Kg).



100-1703

1. Speed selector

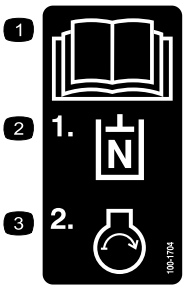

100-1704

1. Read the *Operator's Manual.*
2. Place the auxiliary hydraulics in Neutral.
3. Start the engine.

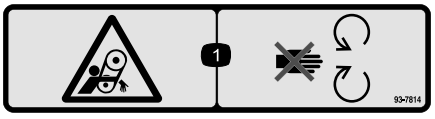

93-7814

1. Entanglement hazard, belt—stay away from moving parts.



100-8821

1. Crushing hazard and cutting hazard of hand—stay a safe distance from the front of the traction unit when the loader arms are raised.

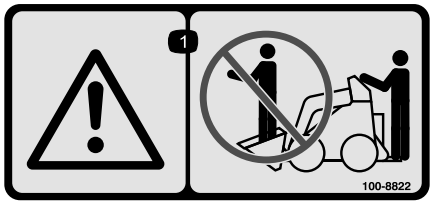

100-8822

1. Warning—do not carry passengers.

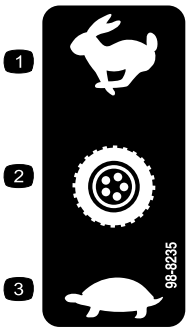

98-8235

1. Fast
2. Traction drive
3. Slow

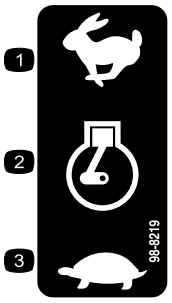

98-8219

1. Fast
2. Throttle
3. Slow



100-1692

1. Brake engaged
2. Parking brake
3. Brake disengaged



93-9084

1. Lift point
2. Tie-down point

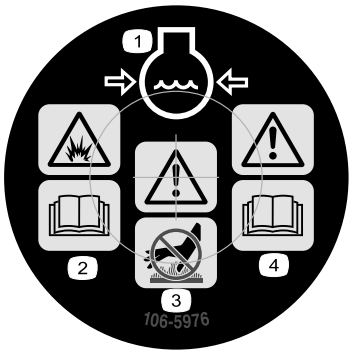

106–5976

1. Engine coolant under pressure
2. Explosion hazard—read the *Operator's Manual.*
3. Warning –do not touch the hot surface.
4. Warning–read the *Operator's Manual.*

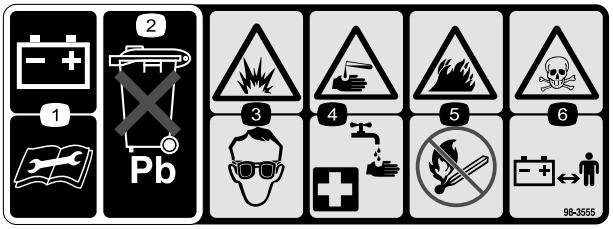

98-3555

1. Read the instructions before servicing or performing maintenance on the battery.
2. Contains lead; do not discard.
3. Explosion hazard—wear eye protection.
4. Caustic liquid/chemical burn hazard—to perform first aid, flush with water.
5. Fire hazard—no fire, open flames, or smoking.
6. Poison hazard—keep children a safe distance from the battery.

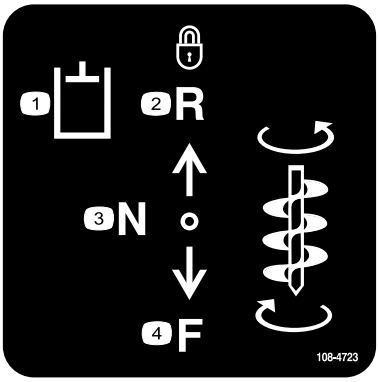

108-4723

1. Auxiliary hydraulics
2. Locked reverse (detent)
3. Neutral (off)
4. Forward

Setup

1

Installing the Valve Lever

Parts needed for this procedure:

1	Speed selector valve lever

Procedure

1. Remove and discard the nut securing the bolt and lock washer to the speed selector lever.
2. Secure the lever to the speed selector valve using the bolt and lock washer as illustrated in Figure 4.

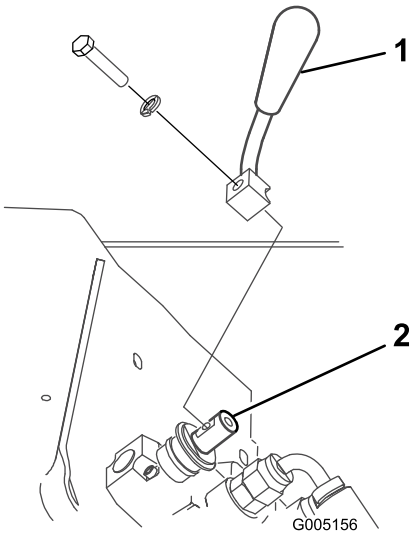

Figure 4

1. Speed selector valve lever 2. Speed selector valve

2

Checking Fluid Levels

No Parts Required

Procedure

Before starting the engine for the first time, check the engine oil, hydraulic fluid, and engine coolant levels. Refer to Operation for more information.

3

Installing the Battery

Parts needed for this procedure:

1	Maintenance-free battery

Procedure

The traction unit is shipped without a battery. Your dealer will provide a maintenance free battery with the product.

⚠ WARNING

Battery terminals or metal tools could short against metal components, causing sparks. Sparks can cause the battery gasses to explode, resulting in personal injury.

- **When removing or installing the battery, do not allow the battery terminals to touch any metal parts of the traction unit.**
- **Do not allow metal tools to short between the battery terminals and metal parts of the traction unit.**

1. Remove the four bolts securing the battery cover and remove the cover (Figure 5).

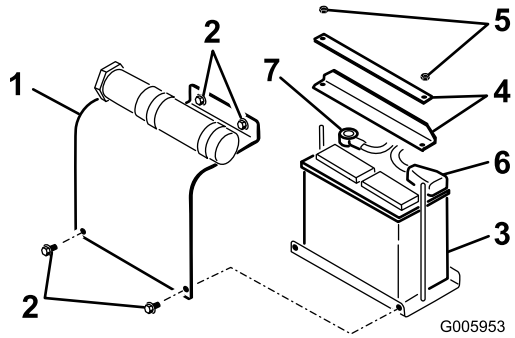

Figure 5

1. Battery cover
2. Bolt
3. Battery
4. Bars
5. Nut
6. Positive cable
7. Negative cable

2. Remove the nuts and bars which will secure the battery (Figure 5).
3. Charge the battery for 10 to 15 minutes at 25 to 30 amps or 30 minutes at 4 to 6 amps. Do not overcharge the battery.

⚠ WARNING

Charging the battery produces gasses that can explode.

Never smoke near the battery and keep sparks and flames away from battery.

4. When the battery is fully charged, unplug the charger from the electrical outlet, then disconnect the charger leads from the battery posts.
5. Install the battery onto the platform (Figure 5).
6. Secure the battery in the chassis with the bars and nuts removed previously (Figure 5).
7. Connect the positive (red) cable to the positive (+) battery post (Figure 5). Slide the rubber cover over the battery post.

⚠ WARNING

Incorrect battery cable routing could damage the tractor and cables causing sparks. Sparks can cause the battery gasses to explode, resulting in personal injury.

- **Always disconnect the negative (black) battery cable before disconnecting the positive (red) cable.**
- **Always connect the positive (red) battery cable before connecting the negative (black) cable.**

8. Connect the negative (black) cable to the negative (-) battery post (Figure 5).

Important: Ensure that the battery cables do not contact any sharp edges or each other.

9. Install the battery cover (Figure 5).

Product Overview

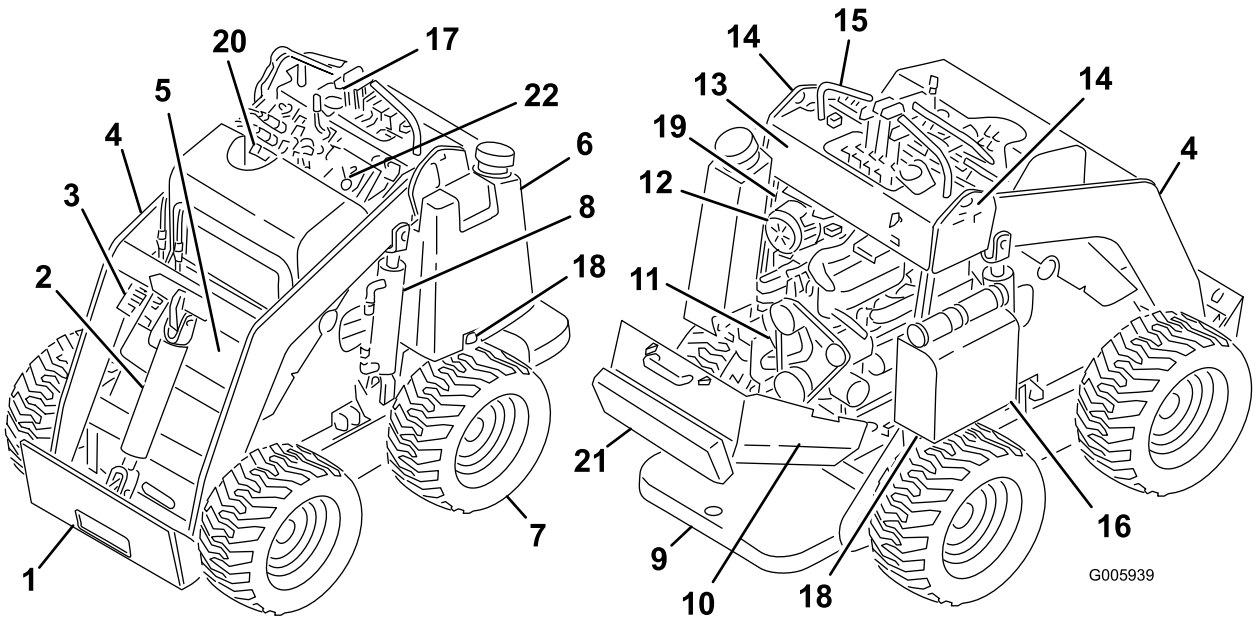

Figure 6

1. Mount plate
2. Tilt cylinder
3. Auxiliary hydraulic couplers
4. Loader arms
5. Front access cover
6. Fuel tank
7. Wheel
8. Lift cylinder
9. Operator platform (removable counterweight not shown)
10. Rear access cover (open)
11. Engine
12. Air filter
13. Control panel
14. Lift points
15. Handle
16. Battery
17. Indicator lights
18. Tow valves
19. Parking brake lever
20. Radiator fill cap
21. Thigh support
22. Flow divider control

Controls

Become familiar with all the controls (Figure 7) before you start the engine and operate the traction unit.

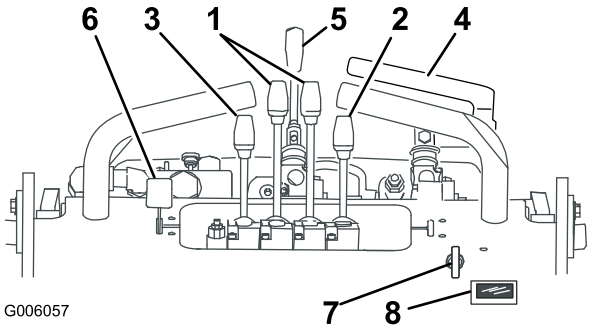

Figure 7

1. Traction control levers
2. Attachment tilt lever
3. Loader arm lever
4. Auxiliary hydraulics lever
5. Speed selector lever
6. Throttle lever
7. Key switch
8. Hour meter

Key Switch

The key switch, used to start and stop the engine, has three positions: off, run, and start.

- To start the engine, rotate the key to the run position, the glow plug light will come on. When the glow plug light turns off, turn the key to the start position. Release the key when engine starts and it will move automatically to the run position.
- To stop the engine, rotate the key to the off position.

Throttle Lever

Move the control forward to increase the engine speed and rearward to decrease speed.

Traction Control Levers

- **To move forward**, move the traction control levers forward. To move rearward, move the traction control levers rearward.
- **To go straight**, move both traction control levers equally.
- **To turn**, move the lever located on the side you want to turn back toward the neutral position while keeping the other lever engaged.

Note: The farther you move the traction control levers in either direction, the faster the traction unit will move in that direction.

- **To slow or stop**, move the traction control levers to neutral.

Attachment Tilt Lever

- To tilt the attachment forward, slowly push the attachment tilt lever forward.
- To tilt the attachment rearward, slowly pull the attachment tilt lever rearward.

Loader Arm Lever

- To lower the loader arms, slowly push the loader arm lever forward.
- To raise the loader arms, slowly pull the loader arm lever rearward.

Loader Valve Lock

The loader valve lock secures the loader arm and attachment tilt levers so that you cannot push them forward. This helps to ensure that no one will accidentally lower the loader arms during maintenance. Secure the loader arms with the lock anytime you need to stop the machine with the loader arms raised.

To set the lock, pull it back and all the way down against the levers (Fig. 13).

Note: You will need to move the levers rearward to engage or disengage the loader valve lock.

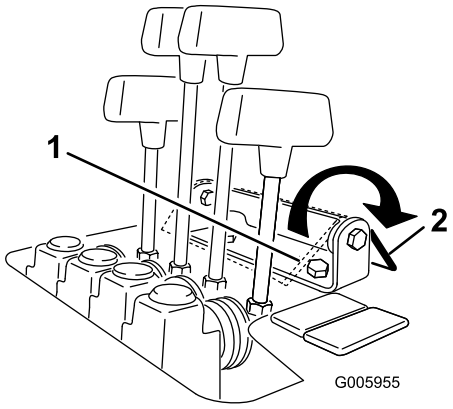

Figure 8

1. Loader valve lock, engaged
2. Loader valve lock, disengaged

Auxiliary Hydraulics Lever

- To operate a hydraulic attachment in forward direction, slowly pull the auxiliary hydraulics lever upward and then rearward.
- To operate a hydraulic attachment in reverse direction, slowly pull the auxiliary hydraulics lever upward and then push it forward. This is also called the detent position because it does not require operator presence.

Speed Selector Lever

⚠ WARNING

If you move the speed selector lever while the traction unit is in motion, the traction unit will either stop suddenly or accelerate quickly. If you operate the traction unit with the speed selector lever in an intermediate position, the traction unit will operate erratically and may be damaged. You could lose control of the traction unit and injure bystanders or yourself.

- **Do not move the speed selector lever when the traction unit is in motion.**
- **Do not operate the traction unit when the speed selector is in any intermediate position (i.e., any position other than fully forward or fully rearward).**

- Move the speed selector lever to the forward position to set the traction drive, loader arms, and attachment tilt to high speed and the auxiliary hydraulics to low speed.
- Move the speed selector lever to the rearward position to set the auxiliary hydraulics to high speed and the traction drive, loader arms, and attachment tilt to low speed.

Hour Meter

The hour meter displays the number of hours of operation that have been logged on the traction unit.

After 50 hours and every 75 hours thereafter (that is at 50, 125, 200, etc.) the hour meter displays SVC on the lower left side of the screen to remind you to change the oil and perform the required maintenance. After every 400 hours (400, 800, 1200, etc.), the hour meter displays SVC on the lower right side of the screen to remind you to perform the maintenance procedures based on a 400 hour schedule. These reminders come on starting three hours prior to the service interval time and flash at regular intervals for six hours.

Flow Divider Control

The traction unit hydraulics (i.e., the traction drive, loader arms, and attachment tilt) work on a separate hydraulic circuit from the auxiliary hydraulics for powering attachments; however, the two systems share the same hydraulic pumps. Using the flow divider control (Figure 9), you can vary the speed of the traction unit hydraulics by diverting hydraulic flow to the auxiliary hydraulics circuit. The flow divider allows you to divide the flow of fluid in varying degrees to slow the traction unit. Thus, the more hydraulic flow you divert to the auxiliary hydraulics, the slower the traction unit hydraulics will move.

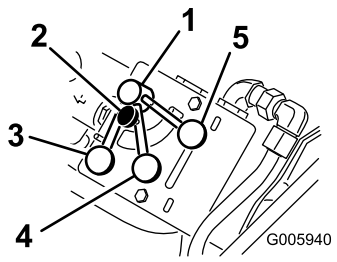

Figure 9

1. Flow divider control
2. Knob
3. 12 o'clock position
4. 10 to 11 o'clock position
5. 9 o'clock position

- Move the flow divider control to the twelve o'clock position to provide maximum speed to the traction unit hydraulics.

  Use this setting for fast operation of the traction unit.

- Move the flow divider control between the twelve o'clock and nine o'clock positions to slow the traction unit hydraulics and fine tune the speed.

  Use a setting in this range with attachments with hydraulics where you need to both run the attachment and move the traction unit hydraulics, such as the auger, boring unit, hydraulic blade, and tiller.

- Move the control to the nine o'clock position to transfer all hydraulic flow to the auxiliary hydraulics of the attachment.

  In this setting, the traction unit hydraulics will not work. Use this setting with hydraulic attachments that do not required the traction unit hydraulics. There are currently no attachments that require the nine o'clock position; however, the trencher does work best if you set it close to nine o'clock so that the traction unit will creep slowly when trenching.

Note: The flow divider control can be fixed in place by turning the knob on the control clockwise until it contacts the dial (Figure 9).

Parking Brake

The traction unit is equipped with a parking brake (Figure 10). Rotate the brake lever downward to set the brake to lock the rear wheels whenever the traction unit will be stopped on a hill or left unattended. Move the lever up before driving the traction unit.

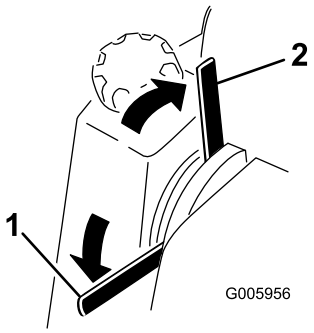

Figure 10

1. Parking brake lever—On position
2. Parking brake lever—Off position

Indicator Lights

The indicator lights warn you in the case of a system malfunction and, in the case of the glow plug light, indicate that the glow plugs are on. Figure 11 illustrates the four indicator lights.

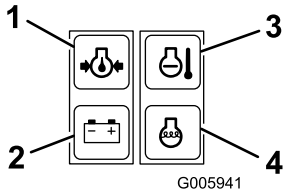

Figure 11

1. Oil pressure light
2. Battery light
3. Engine temperature light
4. Glow plug light

- Engine Temperature Light

  If the engine temperature light is on, the engine is overheating. Stop the engine and allow the traction unit to cool down. Check the coolant level and the belts to the fan and water pump. Fill the coolant as required and replace any worn or slipping belts. If the problem persists, contact your Authorized Toro Dealer for diagnostics and repair.

- Oil Pressure Light

  This light is on for a few seconds whenever you start the engine. If the oil pressure light is on while the engine is running, the engine oil pressure is low. Stop the engine and allow the traction unit to cool down. Check the oil level and fill the crankcase with

oil as needed. If the problem persists, contact your Authorized Toro Dealer for diagnostics and repair.

- Battery Light

  This light is on for a few seconds whenever you start the engine. If the battery light is on while the engine is running, the alternator, battery, or electrical system is broken. Contact your Authorized Toro Dealer for diagnostics and repair.

- Glow Plug Light

  This light is on when the key is turned to run before starting the engine. The glow plug light will remain on for up to 10 seconds, indicating that the glow plugs are warming the engine. If the glow plug light is on while the engine is running, the glow plugs are broken. Contact your Authorized Toro Dealer for diagnostics and repair.

Specifications

Note: Specifications and design are subject to change without notice.

Width	40.5 inches (103 cm)
Length	60 inches (152 cm)
Height	49 inches (125 cm)
Weight (without attachment or counterweight)	1722 lb (783 kg)
Operating capacity (with 200 lb operator, the standard bucket, and without the counterweight)	524 lb (238 kg)
Tipping capacity (with 200 lb operator, the standard bucket, and without the counterweight)	1048 lb (476 kg)
Wheelbase	28 inches (71 cm)
Dump height (with standard bucket)	47 inches (120 cm)
Reach—fully raised (with standard bucket)	26 inches (66 cm)
Height to hinge pin (narrow bucket in standard position)	66 inches (168 cm)

Attachments/Accessories

A selection of Toro approved attachments and accessories are available for use with the machine to enhance and expand its capabilities. Contact your Authorized Service Dealer or Distributor or go to www.Toro.com for a list of all approved attachments and accessories.

Important: Use only Toro approved attachments. Other attachments may create an unsafe operating environment or damage the traction unit.

Operation

Note: Determine the left and right sides of the machine from the normal operating position.

Important: Before operating, check the fuel, oil, and coolant level; remove debris from the traction unit; test the parking brake, and check the tire pressure. Also, ensure that the area is clear of people and debris. You should also know and have marked the locations of all utility lines.

⚠ CAUTION

You could fall off of the platform and be seriously injured during operation.

Do not move the control levers unless you are standing with both feet on the platform and your hands are holding the handles.

Filling the Fuel Tank

The engine runs on clean, fresh diesel fuel with a minimum cetane rating of 40. Purchase fuel in quantities that can be used within 30 days to ensure fuel freshness.

Use summer grade diesel fuel (No. 2-D) at temperatures above 20° F (-7° C) and winter grade diesel fuel (No. 1-D or No. 1-D/2-D blend) below 20° F (-7° C). Use of winter grade diesel fuel at lower temperatures provides lower flash point and pour point characteristics, allowing easier starts and lessening the chances of chemical separation of the fuel due to lower temperatures.

Use of summer grade diesel fuel above 20° F (-7° C) will contribute toward longer life of the fuel pump components.

Important: Do not use kerosene or gasoline in place of diesel fuel. Failure to observe this caution will damage the engine.

1. Park the traction unit on a level surface, lower the loader arms, and stop the engine.
2. Remove the key and allow the engine to cool.
3. Clean around the fuel tank cap and remove the cap.
4. Fill the tank to about one inch below the top of the tank, not the filler neck, with diesel fuel.

⚠ DANGER

Under certain conditions, diesel fuel and fuel vapors are highly flammable and explosive. A fire or explosion from fuel can burn you and others and can cause property damage.

- **Use a funnel and fill the fuel tank outdoors, in an open area, when the engine is off and is cold. Wipe up any fuel that spills.**
- **Do not fill the fuel tank completely full. Add fuel to the fuel tank until the level is 1/4 to 1/2 inch (6 to 13 mm) below the bottom of the filler neck. This empty space in the tank allows the fuel to expand.**
- **Never smoke when handling fuel, and stay away from an open flame or where fuel fumes may be ignited by a spark.**
- **Store fuel in a clean, safety-approved container and keep the cap in place.**

5. Install the fuel tank cap. Wipe up any fuel that may have spilled.

Note: If possible, fill the fuel tank after each use. This will minimize possible buildup of condensation inside the fuel tank.

Draining Water from the Fuel Filter

Service Interval: Before each use or daily

Drain water or other contaminants from the fuel filter daily.

1. Stop the engine and remove the key.
2. Open the rear access cover.
3. Turn the drain valve until the water runs out of the filter (Figure 12).

   Note: The fuel filter is located near the bottom of the fuel tank.

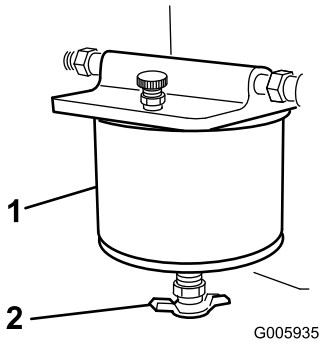

Figure 12

1. Fuel filter
2. Drain valve

4. Close the valve.
5. Close the rear access cover.

Checking the Engine Oil Level

Service Interval: Before each use or daily

1. Park the traction unit on a level surface, lower the loader arms, and stop the engine.
2. Remove the key and allow the engine to cool.
3. Open the rear access cover.
4. Clean around the oil dipstick (Figure 13).

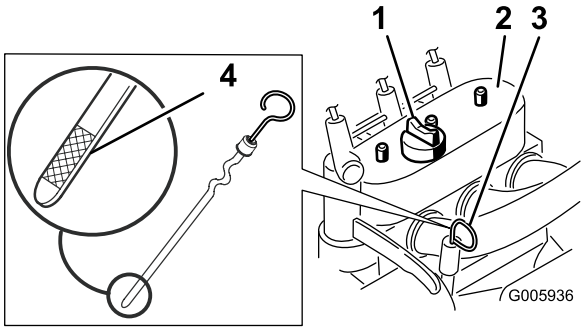

Figure 13

1. Filler cap
2. Valve cover
3. Oil dipstick
4. Metal end

5. Pull out the dipstick and wipe the metal end clean (Figure 13).
6. Slide the dipstick fully into the dipstick tube (Figure 13).
7. Pull the dipstick out and look at the metal end.
8. If the oil level is low, clean around the oil filler cap and remove the cap (Figure 13).
9. Slowly pour only enough oil (diesel engine oil, API service CH-4, CI-4, or higher; refer to Servicing the Engine Oil in Maintenance) into the valve cover to raise the level to the upper mark on the dipstick.

Important: Do not overfill the crankcase with oil because the engine may be damaged.

10. Replace the filler cap and dipstick.

Checking the Engine Coolant Level

Service Interval: Before each use or daily

The cooling system is filled with a 50/50 solution of water and permanent ethylene glycol antifreeze. Check the level of coolant at the beginning of each day, before starting the engine.

⚠ WARNING

If the engine has been running, the coolant in the radiator will be hot and pressurized. If you remove the cap, it may spray out, causing severe burns.

- **Do not remove the radiator cap to check coolant levels.**
- **Do not remove the radiator cap when the engine is hot. Allow the engine to cool for at least 15 minutes or until the radiator cap is cool enough to touch without burning your hand.**

1. Park the traction unit on a level surface, lower the loader arms, and stop the engine.
2. Remove the key and allow the engine to cool.
3. Remove the radiator filler cap and check the coolant level (Figure 14).

   The coolant should be up to filler neck.

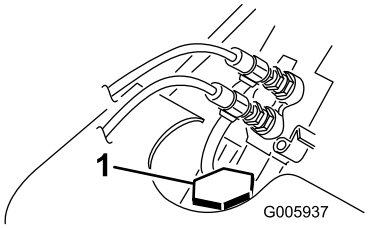

Figure 14

1. Radiator cap

4. If coolant level is low, add coolant up to the bottom of the filler neck.

Important: Do not over fill the radiator.

5. Replace the radiator filler cap, ensuring that it is tightly sealed.

Removing Debris from the Traction Unit

Service Interval: Before each use or daily

Important: Operating the engine with a blocked radiator, will result in engine damage from overheating.

1. Park the traction unit on a level surface, raise the loader arms, and install the cylinder locks.
2. Stop the engine and remove the key.
3. Remove the front access cover.
4. Clean any debris from the grill.
5. Open the rear access cover.
6. Wipe away debris from the air cleaner.
7. Clean any debris buildup on the engine with a brush or blower before each use.

   Important: It is preferable to blow dirt out, rather than washing it out. If water is used, keep it away from electrical items and hydraulic valves. Do not use a high-pressure washer. High-pressure washing can damage the electrical system and hydraulic valves or deplete grease.
8. Replace and secure the front and rear access covers.
9. Remove and store the cylinder locks and lower the loader arms.

Checking the Hydraulic Fluid Level

Service Interval: Every 25 hours

Check the hydraulic fluid level before the engine is first started and after every 25 operating hours.

Hydraulic Tank Capacity: 14.8 US gallons (56 l)

Use 10W-30 or 15W-40 detergent, diesel engine oil (API service CH-4 or higher).

1. Remove the attachment, if one is installed.
2. Park the traction unit on a level surface, raise the loader arms, and install the cylinder locks.
3. Stop the engine, remove the key, and allow the engine to cool.
4. Remove the front access cover.
5. Clean the area around the filler neck of the hydraulic tank (Figure 15).
6. Remove the cap from the filler neck and check the fluid level on the dipstick (Figure 15).

   The fluid level should be between the marks on the dipstick.

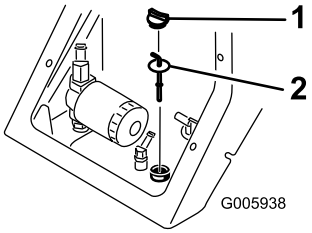

Figure 15

1. Filler neck cap
2. Dipstick

7. If the level is low, add enough fluid to raise it to the proper level.
8. Install the cap on the filler neck.
9. Install the front access cover.
10. Remove and store the cylinder locks and lower the loader arms.

Testing the Parking Brake

Service Interval: Before each use or daily

1. Move the parking brake lever to the On position (Figure 16).

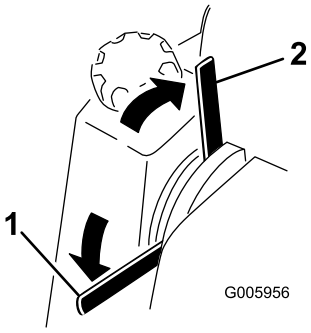

Figure 16

1. Parking brake lever—On position
2. Parking brake lever—Off position

2. Start the engine.
3. Slowly ease the traction drive levers forward or rearward.
4. If the traction unit moves, contact your Authorized Toro Dealer for service.

Checking the Tire Pressure

Service Interval: Before each use or daily

Maintain the air pressure in the tires as specified. Check the tires when they are cold to get the most accurate reading.

Pressure: 15-20 psi (103-138 kPa)

Note: Use a lower tire pressure, 15 psi (103 kPa), when operating in sandy soil conditions to provide better traction in the loose soil.

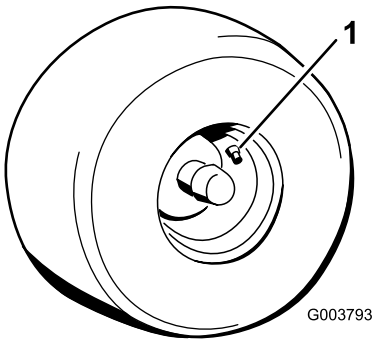

Figure 17

1. Valve stem

Starting the Engine

1. Stand on the platform.
2. Ensure that the auxiliary hydraulics lever is in neutral.
3. Move the throttle lever midway between slow (turtle) and fast (rabbit) positions.
4. Insert the key into the ignition and turn it to the run position.

   Note: The battery, oil pressure, and glow plug lights will come on.
5. When the glow plug light turns off, turn the key to the start position. When the engines starts, release the key.

   Note: A warm engine may be started without waiting for the light to turn off.

   Important: Do not engage the starter for more than 10 seconds at a time. If the engine fails to start, allow a 30 second cool-down period between attempts. Failure to follow these instructions can burn out the starter motor.
6. Move the throttle lever to desired setting.

   Important: If you run the engine at high speeds when the hydraulic system is cold (i.e., when the ambient air temperature is near freezing or lower), hydraulic system damage could occur. When starting the engine in cold conditions, allow the engine to run in the middle throttle position for 2 to 5 minutes before moving the throttle to fast (rabbit).

   Note: If outdoor temperature is below freezing, store the traction unit in a garage to keep it warmer and aid in starting.

Driving the Traction Unit

The throttle control regulates the engine speed as measured in rpm (revolutions per minute). Place the throttle lever in the fast (rabbit) position for best performance.

Note: The throttle position can be utilized to operate at slower speeds.

To drive the traction unit, complete the following actions as necessary:

- To move forward, move the traction control levers forward.
- To move rearward, move the traction control levers rearward.
- To go straight, move both traction control levers equally.
- To turn, move the lever located on the side you want to turn toward the neutral position while keeping the other lever engaged.
- To slow or stop, move the traction control levers to neutral.

Note: The farther you move the traction control levers in either direction, the faster the traction unit will move in that direction.

Stopping the Traction Unit/Engine

1. Move the traction control levers to neutral.
2. Move the throttle lever to the slow (turtle) position.
3. Lower the loader arms to the ground.
4. Turn the ignition key off.

   Note: If the engine has been working hard or is hot, let it idle for a minute before turning the ignition key off. This helps cool the engine before it is stopped. In an emergency, the engine may be stopped immediately.
5. **Remove the key.**

⚠ CAUTION

A child or untrained bystander could attempt to operate the traction unit and be injured.

Remove the key from the switch when leaving the traction unit, even if just for a few seconds.

Moving a Non-functioning Traction Unit

Important: Do not tow or pull the traction unit without first opening the tow valves, or the hydraulic system will be damaged.

1. Stop the engine.
2. Remove the plug covering each tow valve, located under each fuel tank (Figure 18).

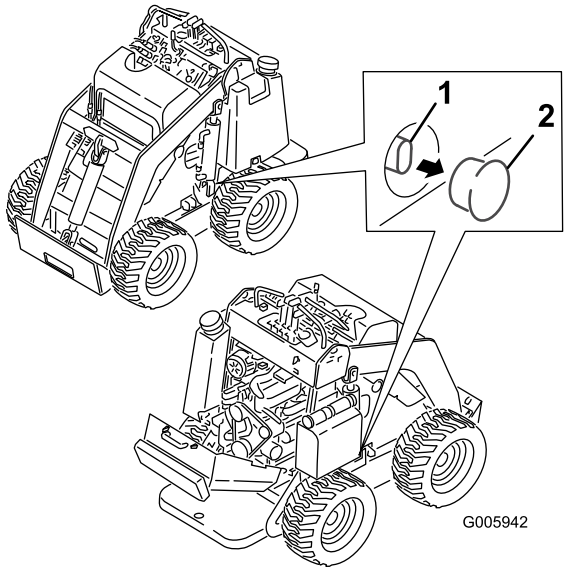

Figure 18

1. Tow valve
2. Plug

3. Loosen the jam nut on each tow valve.
4. Turn each valve counterclockwise one turn with a hex wrench to open them.
5. Tow the traction unit as required.

   Important: Do not exceed 3 mph when towing.
6. When you have repaired the traction unit, close the tow valves and tighten the jam nuts.

   Important: Do not over tighten the tow valves.
7. Replace the plugs.

Using the Cylinder Locks

⚠ WARNING

The loader arms may lower when in the raised position crushing anyone under them.

Install the cylinder locks before performing maintenance that requires raised loader arms.

Installing the Cylinder Locks

1. Start the engine.
2. Raise the loader arms to the fully raised position.
3. Stop the engine.
4. Position a loader arm cylinder lock over each lift cylinder rod (Figure 19).
5. Secure each loader arm cylinder lock with a clevis pin and cotter pin (Figure 19).

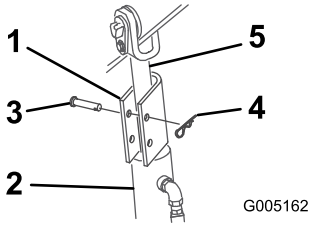

Figure 19

1. Cylinder lock
2. Lift cylinder
3. Hairpin cotter
4. Clevis pin
5. Lift cylinder rod

6. With the engine off, lower the loader arms.

Removing/Storing the Cylinder Lock

1. Start the engine.
2. Raise the loader arms to the fully raised position.
3. Stop the engine.
4. Remove the clevis pin and cotter pin securing each cylinder lock.
5. Remove the cylinder locks.
6. Lower the loader arms.
7. Install the cylinder locks over the hydraulic hoses and secure them with the clevis pins and cotter pins (Figure 20).

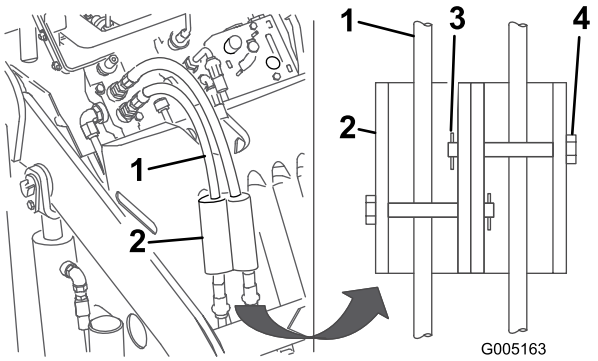

Figure 20

1. Hydraulic hoses
2. Cylinder locks
3. Hairpin cotter
4. Clevis pin

Using Attachments

Installing an Attachment

Important: Use only Toro-approved attachments. Attachments can change the stability and the operating characteristics of the traction unit. The warranty of the traction unit may be voided if used with unapproved attachments.

Important: Before installing the attachment, ensure that the mount plates are free of any dirt or debris and that the pins rotate freely. If the pins do not rotate freely, grease them.

1. Position the attachment on a level surface with enough space behind it to accommodate the traction unit.
2. Start the engine.
3. Tilt the attachment mount plate forward.
4. Position mount plate into the upper lip of the attachment receiver plate (Figure 21).

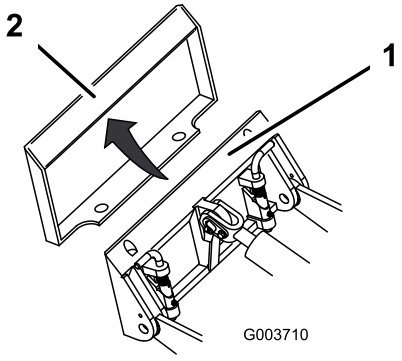

Figure 21

1. Mount plate
2. Receiver plate

5. Raise the loader arms while tilting back the mount plate at the same time.

Important: The attachment should be raised enough to clear the ground, and the mount plate should be tilted all the way back.

6. Stop the engine.
7. Engage the quick attach pins, ensuring that they are fully seated in the mount plate (Figure 22).

Important: If the pins do not rotate to the engaged position, the mount plate is not fully aligned with the holes in the attachment receiver plate. Check the receiver plate and clean it if necessary.

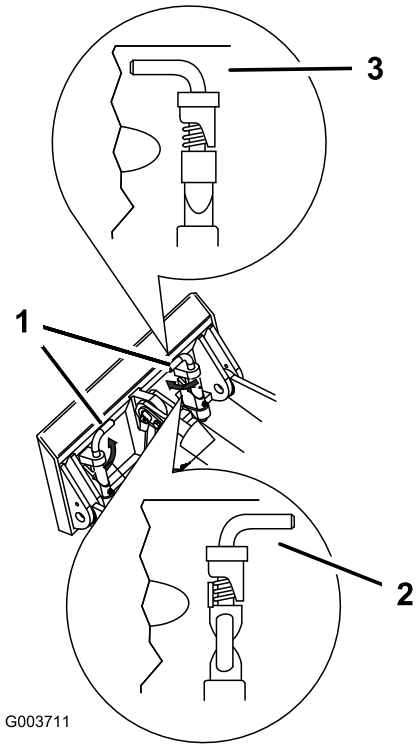

Figure 22

1. Quick attach pins (shown in engaged position)
2. Disengaged position
3. Engaged position

⚠ WARNING

If you do not fully seat the quick attach pins through the attachment mount plate, the attachment could fall off of the traction unit, crushing you or bystanders.

Ensure that your quick attach pins are fully seated in the attachment mount plate.

Connecting the Hydraulic Hoses

If the attachment requires hydraulics for operation, connect the hydraulic hoses as follows:

1. Stop the engine.
2. Move the auxiliary hydraulics lever forward, backward, and back to neutral to relieve pressure at the hydraulic couplers.
3. Move the auxiliary hydraulics lever forward into the detent position.
4. Remove the protective covers from the hydraulic couplers on the traction unit.
5. Ensure that all foreign matter is cleaned from the hydraulic connectors.
6. Push the attachment male connector into the female connector on the traction unit.

   Note: When you connect the attachment male connector first, you will relieve any pressure built up in the attachment.

⚠ WARNING

Hydraulic fluid escaping under pressure can penetrate skin and cause injury. Fluid injected into the skin must be surgically removed within a few hours by a doctor familiar with this form of injury or gangrene may result.

- **Keep your body and hands away from pin hole leaks or nozzles that eject high pressure hydraulic fluid.**
- **Use cardboard or paper to find hydraulic leaks, never use your hands.**

⚠ CAUTION

Hydraulic couplers, hydraulic lines/valves, and hydraulic fluid may be hot. If you contact hot components you may be burned.

- **Wear gloves when operating the hydraulic couplers.**
- **Allow the traction unit to cool before touching hydraulic components.**
- **Do not touch hydraulic fluid spills.**

7. Push the attachment female connector into the male connector on the traction unit.
8. Confirm that the connection is secure by pulling on the hoses.
9. Move the auxiliary hydraulics lever to neutral.

Removing an Attachment

1. Lower the attachment to the ground.
2. Stop the engine.
3. Disengage the quick attach pins by turning them to the outside.
4. If the attachment uses hydraulics, move the auxiliary hydraulics lever forward, backward, and back to neutral to relieve pressure at the hydraulic couplers.
5. If the attachment uses hydraulics, slide the collar back on the hydraulic couplers and disconnect them.

   Important: Connect the attachment hoses together to prevent hydraulic system contamination during storage.

6. Install the protective covers onto the hydraulic couplers on the traction unit.
7. Start the engine, tilt the mount plate forward, and back the traction unit away from the attachment.

Securing the Traction Unit for Transport

When transporting the traction unit on a trailer, always use the following procedure:

Important: Do not operate or drive the traction unit on roadways.

1. Lower the loader arms.
2. Stop the engine.
3. Secure the traction unit to the trailer with chains or straps using the tie-down/lift loops (Figure 6) to secure the rear of the traction unit and the loader arms/mount plate to secure the front of the traction unit.

Adjusting the Thigh Support

To adjust the thigh support (Figure 23), loosen the knobs and raise or lower the support pad to the desired height. You can also obtain additional adjustment by loosening the nut securing the pad to the adjustment plate, moving the plate up or down as needed. Tighten all fasteners securely when finished.

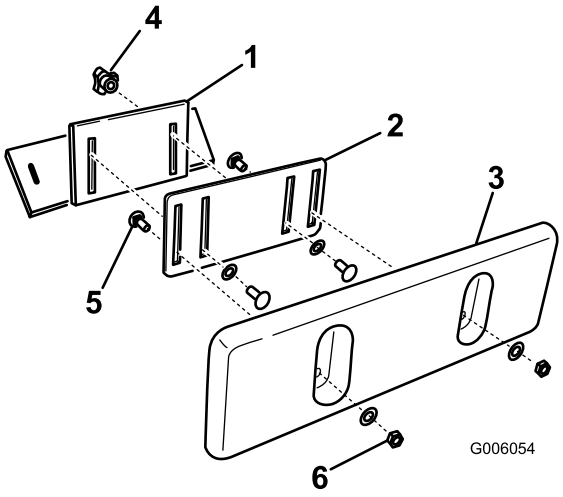

Figure 23

1. Thigh support bracket
2. Adjustment plate
3. Thigh support pad
4. Knob and flat washer
5. Carriage bolt
6. Locknut and flat washer

Maintenance

Note: Determine the left and right sides of the machine from the normal operating position.

Recommended Maintenance Schedule(s)

Maintenance Service Interval	Maintenance Procedure
After the first 8 hours	• Replace the hydraulic filter. • Torque the wheel lug nuts to 50 ft-lb (68 N·m).
After the first 50 hours	• Change the engine oil and filter.
Before each use or daily	• Drain water from the fuel filter. • Check the engine oil level. • Check the engine coolant level. • Remove debris from the traction unit. • Test the parking brake • Check the tire pressure. • Grease the traction unit. • Check for loose fasteners.
Every 25 hours	• Check the hydraulic fluid level. • Check the hydraulic lines for leaks, loose fittings, kinked lines, loose mounting supports, wear, weather, and chemical deterioration.
Every 75 hours	• Change the engine oil and filter (more frequently when operating conditions are extremely dusty or sandy). • Check the battery electrolyte level. (Replacement battery only) • Check the battery cable connections.
Every 100 hours	• Torque the wheel lug nuts to 50 ft-lb (68 N·m).
Every 200 hours	• Replace the primary air filter.
Every 400 hours	• Replace the hydraulic filter.
Every 600 hours	• Replace the safety air filter.
Every 1,500 hours	• Replace all moving hydraulic hoses.
Yearly	• Change the fuel filter. • Change the hydraulic fluid.
Yearly or before storage	• Touch up chipped paint

Important: **Refer to your *Engine Operator's Manual* for additional maintenance procedures.**

⚠ CAUTION

If you leave the key in the ignition switch, someone could accidently start the engine and seriously injure you or other bystanders.

Remove the key from the ignition before you do any maintenance.

Premaintenance Procedures

Opening the Access Covers

Removing the Front Access Cover

1. Raise the loader arms and install the cylinder locks.

   Note: In the case that you need to remove the front access cover without raising the loader arms, be very careful not to damage the cover or hydraulic hoses as you maneuver the cover out from under the arms.

2. Stop the engine and remove the key.
3. Release the two locking tabs (Figure 24, top, left tab illustrated).

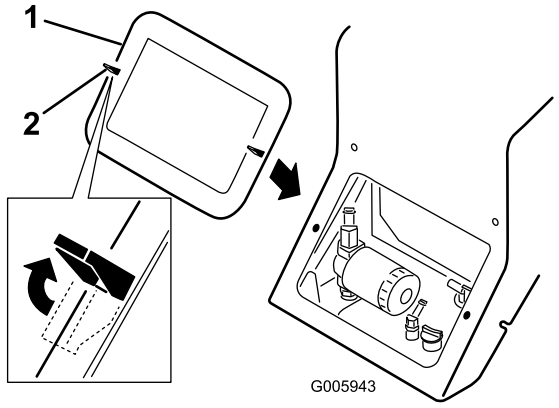

Figure 24

4. Pull the cover off of the traction unit.
5. When finished, replace the front access cover and secure it with the two locking tabs.

Opening the Rear Access Cover

1. Stop the engine and remove the key.
2. Release the two locking tabs on top of the rear access cover (Figure 25).

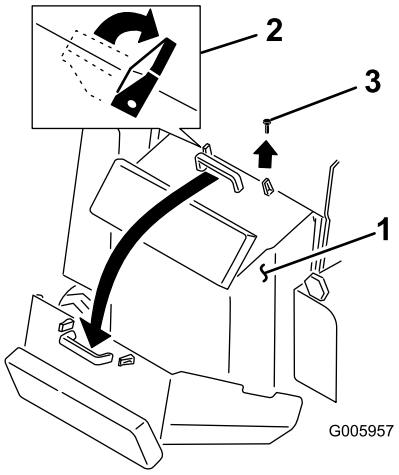

Figure 25

1. Rear access cover
2. Locking tabs
3. Bolt

3. Remove the bolt located next to the right locking tab (Figure 25).
4. Grasping the handle, pull the cover up and back to swing it open (Figure 25).
5. When finished, close the rear access cover by swinging it up and seating it in place.
6. Secure it with the two locking tabs and bolt.

Lubrication

Greasing the Traction Unit

Service Interval: Before each use or daily

Grease all pivot joints every 8 operating hours and immediately after every washing.

Grease Type: General-purpose grease.

1. Lower the loader arms and stop the engine. Remove the key.
2. Clean the grease fittings with a rag.
3. Connect a grease gun to each fitting (Figure 26 and Figure 27).

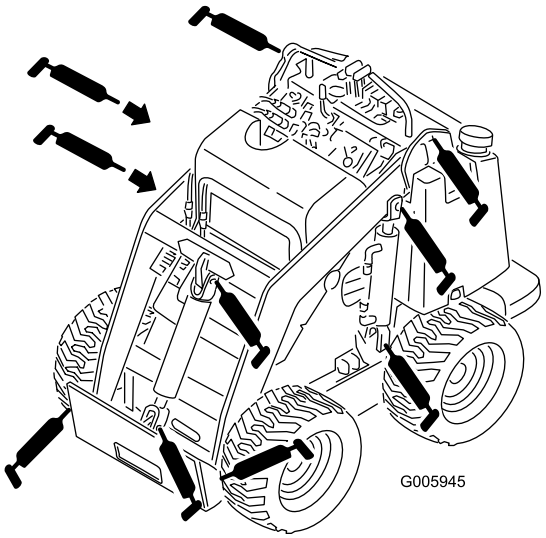

Figure 26

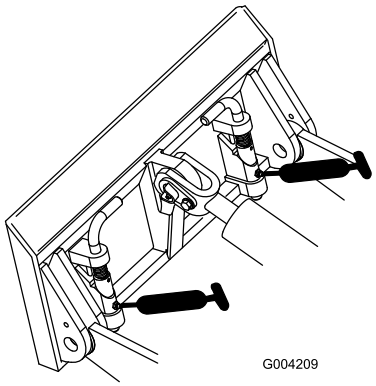

Figure 27

4. Pump grease into the fittings until grease begins to ooze out of the bearings (approximately 3 pumps).
5. Wipe up any excess grease.

Engine Maintenance

Servicing the Air Cleaner

Primary Filter: Replace after every 200 operating hours or more often in dusty conditions.

Safety Filter: Replace after every 600 operating hours.

Note: Service the air cleaner more frequently if operating conditions are extremely dusty or sandy.

Replacing the Filters

Service Interval: Every 200 hours
Every 600 hours

1. Lower the loader arms, stop the engine, and remove the key.
2. Open the rear access cover.
3. Release the latches on the air cleaner and pull the air cleaner cover off of the air cleaner body (Figure 28).

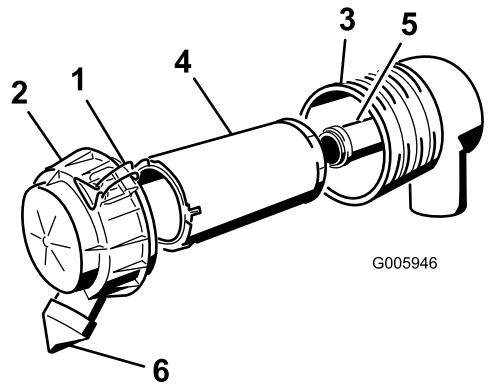

Figure 28

1. Latches
2. Air cleaner cover
3. Air filter body
4. Primary filter
5. Safety filter
6. Dust cap

4. Squeeze the dust cap sides to open it and knock the dust out.
5. Clean the inside of the air cleaner cover with compressed air.
6. Gently slide the primary filter out of the air cleaner body (Figure 28). Avoid knocking the filter into the side of the body.

   Important: Do not attempt to clean the primary filter.
7. Remove the safety filter only if you intend to replace it.

   Important: Never attempt to clean the safety filter. If the safety filter is dirty, then the primary filter is damaged and you should replace both filters.

8. Inspect the new filter(s) for damage by looking into the filter while shining a bright light on the outside of the filter. Holes in the filter will appear as bright spots. Inspect the element for tears, an oily film, or damage to the rubber seal. If the filter is damaged do not use it.
9. If you are replacing the safety filter, carefully slide the new filter into the filter body (Figure 28).

   Important: To prevent engine damage, always operate the engine with both air filters and cover installed.
10. Carefully slide the primary filter over the safety filter (Figure 28). Ensure that it is fully seated by pushing on the outer rim of the filter while installing it.

    Important: Do not press on the soft inside area of the filter.
11. Install the air cleaner cover with the side indicated as UP facing up and secure the latches (Figure 28).
12. Close the hood.

Servicing the Engine Oil

Change oil and filter after the first 50 operating hours and then every 75 operating hours thereafter.

Note: Change oil more frequently when operating conditions are extremely dusty or sandy.

Oil Type: Detergent diesel engine oil (API service CH-4, CI-4 or higher)

Crankcase Capacity: w/filter, 0.84 gal. (3.2 l)

Viscosity:

- For temperatures above 0° F (-18° C), use 15W-40 (preferred) or 10W-30.
- For temperatures below 32° F (0° C), use 5W-30.

Changing the Oil and Filter

Service Interval: After the first 50 hours

Every 75 hours

1. Start the engine and let it run for five minutes. This warms the oil so it drains better.
2. Park the traction unit so that the drain side is slightly lower than the opposite side to ensure that the oil drains completely.
3. Lower the loader arms, chock the wheels, stop the engine, and remove the key.

⚠ CAUTION

Components will be hot if the traction unit has been running. If you touch hot components you may be burned.

Allow the traction unit to cool before performing maintenance or touching components under the hood.

4. Place a pan under the oil drain tube (Figure 29).

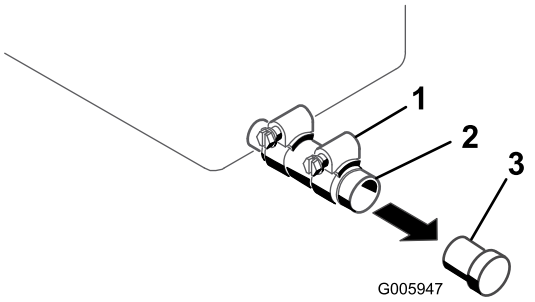

Figure 29

1. Clamp
2. Oil drain tube
3. Plug

5. Loosen the clamp and remove the plug (Figure 29).
6. When the oil has drained completely, replace the plug and tighten the clamp.

   Note: Dispose of the used oil at a certified recycling center.
7. Open the rear access cover.
8. Remove the old filter and wipe the filter adapter (Figure 30) gasket surface.

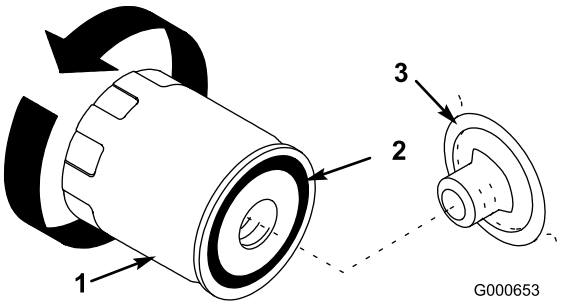

Figure 30

1. Oil filter
2. Gasket
3. Adapter

9. Pour new oil of the proper type in through the center hole of the filter. Stop pouring when the oil reaches the bottom of the threads.
10. Allow a minute or two for the oil to be absorbed by filter material, then pour off the excess oil.
11. Apply a thin coat of new oil to the rubber gasket on the replacement filter (Figure 30).

12. Install the replacement oil filter to the filter adapter. Turn the oil filter clockwise until the rubber gasket contacts the filter adapter, then tighten the filter an additional 1/2 turn (Figure 30).
13. Remove the oil fill cap and slowly pour approximately 80% of the specified amount of oil in through the valve cover.
14. Check the oil level; refer to Checking the Engine Oil Level (page 19).
15. Slowly add additional oil to bring the level to the upper mark on the dipstick.
16. Replace the fill cap.
17. Close the rear access cover.

Fuel System Maintenance

Changing the Fuel Filter

Service Interval: Yearly

Replace the fuel filter yearly.

Important: Never install a dirty filter.

1. Lower the loader arms, stop the engine, and remove the key.
2. Shut off the fuel valve on the bottom of the fuel tank (Figure 33).
3. Open the rear access cover.
4. Open the drain valve (Figure 31) and drain the fuel from the fuel filter into a suitable container and dispose of it properly.

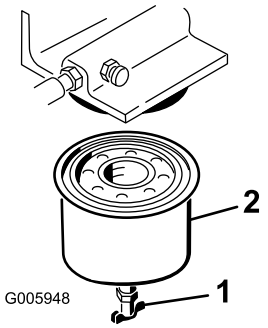

Figure 31

1. Drain valve
2. Fuel filter

5. Remove the fuel filter with a filter wrench (Figure 31).
6. Clean the mounting surface.
7. Lubricate the gasket on the new filter with clean engine oil. Screw on the new filter by hand until the gasket contacts the housing. Then tighten it another 1/2 turn.
8. Open the fuel valve on the bottom of the fuel tank (Figure 33).
9. Bleed the fuel system; refer to Bleeding the Fuel System.
10. Start the engine and check for leaks.

Bleeding the Fuel System

Bleed the air from the fuel system in any of the following situations:

- Initial start up of a new traction unit or a traction unit that has been stored.

- After the engine has ceased running due to lack of fuel.
- After maintenance has been performed on the fuel system components.

1. Open the rear access cover.
2. Place a drain pan under the fuel filter to catch spills.
3. Open the bleed screw on top of the fuel filter to fill the bowl with fuel (Figure 32).

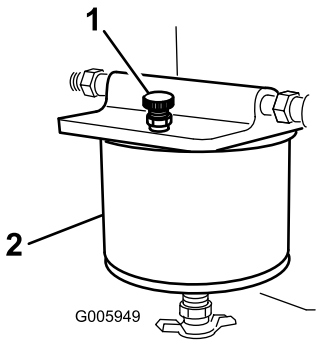

Figure 32

1. Fuel filter
2. Bleed screw

4. Close the bleed screw when fuel comes out in a steady stream.
5. On left side of the engine, locate the air vent plug on top of the fuel injection pump and connect a hose to it, leading to a drain pan.
6. Open the vent plug and crank the engine until fuel comes out a steady stream.
7. Close the vent plug.
8. Close the rear access cover.

Draining the Fuel Tank

⚠ DANGER

In certain conditions, fuel is extremely flammable and highly explosive. A fire or explosion from fuel can burn you and others and can damage property.

- **Drain fuel from the fuel tanks when the engine is cold. Do this outdoors in an open area. Wipe up any fuel that spills.**
- **Never smoke when draining fuel, and stay away from an open flame or where a spark may ignite the fumes.**

1. Park the traction unit on a level surface, to ensure that the fuel tanks drain completely.
2. Lower the loader arms, stop the engine, and remove the key.
3. Shut off the fuel valve in the hose near the bottom of the fuel tank (Figure 33).

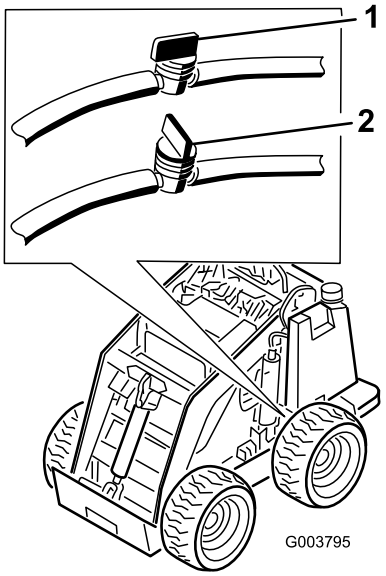

Figure 33

1. Fuel valve, open
2. Fuel valve, closed

4. Open the rear access cover.
5. Loosen the hose clamp at the fuel filter and slide it up the fuel line away from the filter.
6. Pull the fuel line off of the fuel filter, open the fuel valve, and allow the fuel to drain into a fuel can or drain pan.
7. Install the fuel line onto the fuel filter.
8. Slide the hose clamp close to the fuel filter to secure the fuel line.
9. Close the rear access cover.
10. Open the fuel valve in the hose near the bottom of the fuel tank as illustrated in Figure 33.

Note: Now is the best time to install a new fuel filter because the fuel tank is empty.

Electrical System Maintenance

Servicing the Battery

Important: The battery you received with your product is a maintenance free battery, and as such you *do not* need to follow these maintenance procedures. This section details the procedures for maintaining a standard lead acid battery which you may use as a replacement for the original when it wears out.

Check the electrolyte level in the battery every 75 hours. Always keep the battery clean and fully charged. Use a paper towel to clean the battery case. If the battery terminals are corroded, clean them with a solution of four parts water and one part baking soda. Apply a light coating of grease to the battery terminals to reduce corrosion.

Specifications: 12 v, 450 Cold Cranking Amps

Checking the Electrolyte Level

Service Interval: Every 75 hours (Replacement battery only)

1. Stop the engine and remove the key.
2. Remove the battery cover (Figure 34).

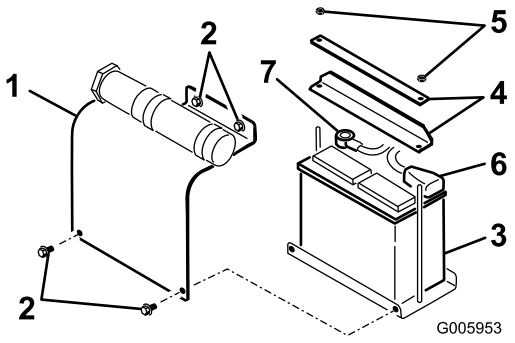

Figure 34

1. Battery cover
2. Bolt
3. Battery
4. Bars
5. Nut
6. Positive cable
7. Negative cable

3. Look at the side of the battery. The electrolyte must be up to the Upper line (Figure 35). Do not allow the electrolyte to fall below the Lower line (Figure 35).

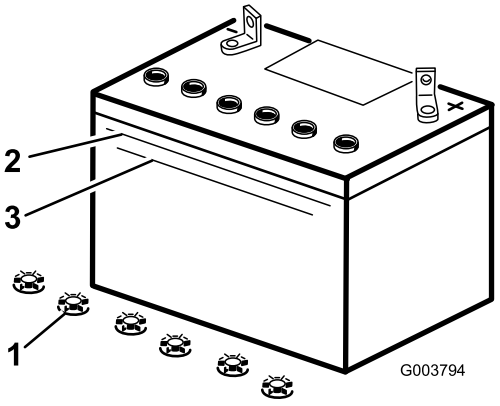

Figure 35

1. Filler caps
2. Upper line
3. Lower line

4. If the electrolyte is low, add the required amount of distilled water; refer to Adding Water to the Battery.

Adding Water to the Battery

The best time to add distilled water to the battery is just before you operate the traction unit. This lets the water mix thoroughly with the electrolyte solution.

⚠ DANGER

Battery electrolyte contains sulfuric acid which is a deadly poison and causes severe burns.

- **Do not drink electrolyte and avoid contact with skin, eyes or clothing. Wear safety glasses to shield your eyes and rubber gloves to protect your hands.**
- **Fill the battery where clean water is always available for flushing the skin.**

1. Remove the nuts and bars securing the battery (Figure 34).
2. Disconnect the negative (black) cable to the negative (-) battery post (Figure 34).

⚠ WARNING

Incorrect battery cable routing could damage the tractor and cables causing sparks. Sparks can cause the battery gasses to explode, resulting in personal injury.

- **Always disconnect the negative (black) battery cable before disconnecting the positive (red) cable.**
- **Always connect the positive (red) battery cable before connecting the negative (black) cable.**

3. Disconnect the positive (red) cable to the positive (+) battery post (Figure 34).
4. Lift the battery off of the platform.

   Important: Never fill the battery with distilled water while the battery is installed in the traction unit. Electrolyte could be spilled on other parts and cause corrosion.

5. Clean the top of the battery with a paper towel.
6. Remove the filler caps from the battery (Figure 35).
7. Slowly pour distilled water into each battery cell until the electrolyte level is up to the Upper line (Figure 35) on the battery case.

   Important: Do not overfill the battery because electrolyte (sulfuric acid) can cause severe corrosion and damage to the chassis.

8. Wait five to ten minutes after filling the battery cells. Add distilled water, if necessary, until the electrolyte level is up to the Upper line (Figure 35) on the battery case.
9. Install the battery filler caps.

Charging the Battery

⚠ WARNING

Charging the battery produces gasses that can explode.

Never smoke near the battery and keep sparks and flames away from battery.

Important: Always keep the battery fully charged (1.265 specific gravity). This is especially important to prevent battery damage when the temperature is below 32° F (0° C).

1. Check the electrolyte level; refer to Checking Electrolyte Level.
2. Make sure the filler caps are installed in the battery.
3. Charge the battery for 10 to 15 minutes at 25 to 30 amps or 30 minutes at 4 to 6 amps (Figure 36). Do not overcharge the battery.

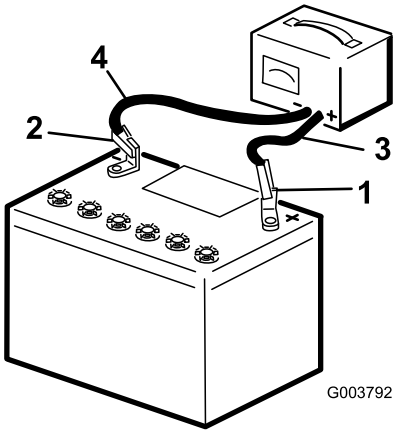

Figure 36

1. Positive battery post
2. Negative battery post
3. Red (+) charger lead
4. Black (-) charger lead

4. When the battery is fully charged, unplug the charger from the electrical outlet, then disconnect the charger leads from the battery posts (Figure 36).

Installing the Battery

1. Install the battery onto the platform (Figure 34).
2. Secure the battery in the chassis with the bars and nuts removed previously (Figure 34).
3. Connect the positive (red) cable to the positive (+) battery post (Figure 34). Slide the rubber cover over the battery post.
4. Connect the negative (black) cable to the negative (-) battery post (Figure 34).

   Important: Ensure that the battery cables do not contact any sharp edges or each other.

5. Install the battery cover (Figure 34).

Hydraulic System Maintenance

Replacing the Hydraulic Filter

Service Interval: After the first 8 hours

Every 400 hours

Important: Do not substitute an automotive oil filter or severe hydraulic system damage may result.

Change the hydraulic filter after the first 8 operating hours and then every 400 operating hours thereafter.

1. Position traction unit on a level surface.
2. Raise the loader arms and install the cylinder locks, stop the engine, and remove the key.
3. Remove the front access cover.
4. Place a drain pan under the filter.
5. Remove the old filter (Figure 37) and wipe the surface of the filter adapter gasket clean.

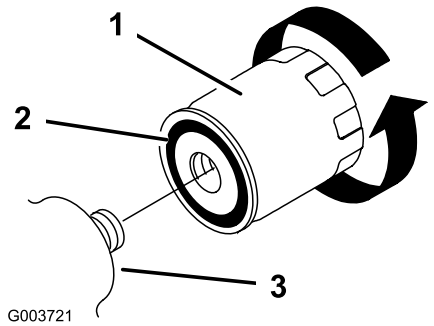

Figure 37

1. Hydraulic filter

6. Apply a thin coat hydraulic fluid to the rubber gasket on the replacement filter (Figure 37).
7. Install the replacement hydraulic filter onto the filter adapter (Figure 37). Tighten it clockwise until the rubber gasket contacts the filter adapter, then tighten the filter an additional 1/2 turn.
8. Clean up any spilled fluid.
9. Start the engine and let it run for about two minutes to purge air from the system.
10. Stop the engine and check for leaks.

⚠ WARNING

Hydraulic fluid escaping under pressure can penetrate skin and cause injury. Fluid injected into the skin must be surgically removed within a few hours by a doctor familiar with this form of injury or gangrene may result.

- **Keep your body and hands away from pin hole leaks or nozzles that eject high pressure hydraulic fluid.**
- **Use cardboard or paper to find hydraulic leaks, never use your hands.**

11. Check the fluid level in the hydraulic tank (refer to Checking the Hydraulic Fluid Level (page 20)) and add fluid to raise the level to mark on dipstick. Do not over fill the tank.
12. Install the front access cover.
13. Remove and store the cylinder locks and lower the loader arms.

Changing the Hydraulic Fluid

Service Interval: Yearly

Change the hydraulic fluid yearly.

1. Position the traction unit on a level surface.
2. Raise the loader arms and install the cylinder locks.
3. Stop the engine and remove the key.
4. Remove the front access cover.
5. Place a large drain pan under the traction unit that can hold at least 15 US gallons (56 l).
6. Remove the drain plug from the bottom of the hydraulic tank and allow the fluid to completely drain out.
7. Install the drain plug.
8. Fill the hydraulic tank with approximately 15 US gallons (56 L) of 10W-30 or 15W-40 detergent, diesel engine oil (API service CH-4 or higher); refer to Checking the Hydraulic Fluid Level (page 20).

   Note: Dispose of used oil at a certified recycling center.
9. Install the hood.
10. Remove and store the cylinder locks and lower the loader arms.

Checking the Hydraulic Lines

Service Interval: Every 25 hours

Every 1,500 hours

After every 25 operating hours, check the hydraulic lines and hoses for leaks, loose fittings, kinked lines, loose mounting supports, wear, weather, and chemical deterioration. Replace all moving hydraulic hoses every 1500 hours or 2 years, which ever comes first. Make necessary repairs before operating.

⚠ WARNING

Hydraulic fluid escaping under pressure can penetrate skin and cause injury. Fluid injected into the skin must be surgically removed within a few hours by a doctor familiar with this form of injury or gangrene may result.

- **Keep your body and hands away from pin hole leaks or nozzles that eject high pressure hydraulic fluid.**
- **Use cardboard or paper to find hydraulic leaks, never use your hands.**

Storage

1. Lower the loader arms, stop the engine, and remove the key.
2. Remove dirt and grime from the external parts of the entire traction unit, especially the engine. Clean dirt and chaff from the radiator.

   Important: You can wash the traction unit with mild detergent and water. Do not pressure wash the traction unit. Avoid excessive use of water, especially near the control panel, engine, hydraulic pumps, and motors.
3. Service the air cleaner; refer to Servicing the Air Cleaner.
4. Grease the traction unit; refer to Greasing the Traction Unit.
5. Drain water from the fuel filter; refer to Draining Water from the Fuel Filter.
6. Torque the wheel lug nuts to 50 ft-lb (68 N·m).
7. Check the hydraulic fluid level; refer to Checking the Hydraulic Fluid Level.
8. Check the tire pressure; refer to Checking the Tire Pressure.
9. Charge the battery; refer to the Servicing the Battery.
10. Flush the fuel tank with fresh, clean diesel fuel.
11. Check and tighten all bolts, nuts, and screws. Repair or replace any part that is damaged or defective.
12. Paint all scratched or bare metal surfaces. Paint is available from your Authorized Service Dealer.
13. Check antifreeze protection and fill the radiator with a 50/50 solution of water and permanent ethylene glycol antifreeze. Refer to your *Engine Owners Manual* or Authorized Service Dealer for details on checking and maintaining the cooling system.
14. Store the traction unit in a clean, dry garage or storage area. Remove the key from the ignition switch and keep it in a memorable place.
15. Cover the traction unit to protect it and keep it clean.

Important: When removing the traction unit from storage, charge the battery; refer to Servicing the Battery.

Troubleshooting

Problem	Possible Cause	Corrective Action
The starter does not crank	1. The electrical connections are corroded or loose.	1. Check the electrical connections for good contact.
	2. A fuse is blown or loose.	2. Correct or replace the fuse.
	3. The battery is discharged.	3. Charge the battery or replace it.
	4. The relay or switch is damaged.	4. Contact your Authorized Service Dealer.
	5. A damaged starter or starter solenoid.	5. Contact your Authorized Service Dealer.
	6. Seized internal engine components.	6. Contact your Authorized Service Dealer.
The engine cranks, but will not start.	1. Incorrect starting procedure.	1. Refer to Starting and Stopping the Engine
	2. The fuel tank is empty.	2. Fill with fresh fuel.
	3. The fuel shut-off valve is closed.	3. Open the fuel shut-off valve.
	4. Dirt, water, stale fuel, or incorrect fuel is in the fuel system.	4. Drain and flush the fuel system; add fresh fuel.
	5. Clogged fuel line.	5. Clean or replace.
	6. There is air in the fuel.	6. Bleed the nozzles and check for air leaks at the fuel hose connections and fittings between the fuel tank and engine.
	7. Inoperative glow plugs.	7. Check the fuse, glow plugs, and wiring.
	8. Slow cranking speed.	8. Check the battery, oil viscosity, and starting motor (contact your Authorized Service Dealer).
	9. The air cleaner filters are dirty.	9. Service the air filters.
	10. The fuel filter is clogged.	10. Replace the fuel filter.
	11. Improper fuel grade for cold weather use.	11. Drain the fuel system and replace the fuel filter. Add fresh fuel of proper grade for ambient temperature conditions. You may need to warm the entire traction unit.
	12. Low compression.	12. Contact your Authorized Service Dealer.
	13. The injection nozzles are damaged.	13. Contact your Authorized Service Dealer.
	14. The injection pump timing is incorrect.	14. Contact your Authorized Service Dealer.
	15. The injection pump is broken.	15. Contact your Authorized Service Dealer.
	16. The ETR solenoid is broken.	16. Contact your Authorized Service Dealer.
The engine starts, but does not keep running.	1. The fuel tank vent is restricted.	1. Loosen the cap. If the engine runs with the cap loosened, replace the cap.
	2. Dirt or water is in the fuel system.	2. Drain and flush the fuel system; add fresh fuel.
	3. The fuel filter is clogged.	3. Replace the fuel filter.
	4. There is air in the fuel.	4. Bleed the nozzles and check for air leaks at fuel hose connections and fittings between the fuel tank and engine.
	5. Improper fuel grade for cold weather use.	5. Drain the fuel system and replace the fuel filter. Add fresh fuel of proper grade for ambient temperature conditions.

Problem	Possible Cause	Corrective Action
	6. The spark arrestor screen is clogged.	6. Clean or replace the spark arrestor screen.
	7. The fuel pump is damaged.	7. Contact your Authorized Service Dealer.
The engine runs, but knocks or misses.	1. Dirt, water, stale fuel, or incorrect fuel is in the fuel system.	1. Drain and flush the fuel system; add fresh fuel.
	2. Engine overheating.	2. Refer to Engine Overheats.
	3. There is air in the fuel.	3. Bleed nozzles and check for air leaks at the fuel hose connections and fittings between the fuel tank and engine.
	4. The injection nozzles are damaged.	4. Contact your Authorized Service Dealer.
	5. Low compression	5. Contact your Authorized Service Dealer.
	6. The injection pump timing is incorrect.	6. Contact your Authorized Service Dealer.
	7. Excessive carbon build-up.	7. Contact your Authorized Service Dealer.
	8. Internal wear or damage.	8. Contact your Authorized Service Dealer.
The engine will not idle.	1. The fuel tank vent is restricted.	1. Loosen the cap. If the engine runs with the cap loosened, replace the cap.
	2. Dirt, water, stale fuel, or incorrect fuel is in the fuel system.	2. Drain and flush the fuel system; add fresh fuel.
	3. The air cleaner filters are dirty.	3. Service the air filters.
	4. The fuel filter is clogged.	4. Replace the fuel filter.
	5. There is air in the fuel.	5. Bleed the nozzles and check for air leaks at fuel hose connections and fittings between the fuel tank and engine.
	6. The fuel pump is damaged.	6. Contact your Authorized Service Dealer.
	7. Low compression	7. Contact your Authorized Service Dealer.
The engine overheats.	1. More coolant is needed.	1. Check and add coolant.
	2. Restricted air flow to the radiator.	2. Inspect and clean the radiator screen with every use.
	3. The crankcase oil level is incorrect.	3. Fill or drain to the full mark.
	4. Excessive loading.	4. Reduce load; use lower ground speed.
	5. Incorrect fuel is in the fuel system.	5. Drain and flush the fuel system; add fresh fuel.
	6. The thermostat is damaged.	6. Contact your Authorized Service Dealer.
	7. The fan belt is loose or broken.	7. Contact your Authorized Service Dealer.
	8. Injection timing is incorrect.	8. Contact your Authorized Service Dealer.
	9. Coolant pump is damaged.	9. Contact your Authorized Service Dealer.

Problem	Possible Cause	Corrective Action
The engine loses power.	1. The engine load is excessive.	1. Reduce ground speed.
	2. The crankcase oil level is incorrect.	2. Fill or drain to the full mark.
	3. The air cleaner filters are dirty.	3. Service the air filters.
	4. Dirt, water, stale fuel, or incorrect fuel is in the fuel system.	4. Drain and flush the fuel system; add fresh fuel.
	5. Engine overheating.	5. Refer to Engine Overheats.
	6. The spark arrestor screen is clogged.	6. Clean or replace the spark arrestor screen.
	7. There is air in the fuel.	7. Bleed the nozzles and check for air leaks at fuel hose connections and fittings between the fuel tank and engine.
	8. Low compression	8. Contact your Authorized Service Dealer.
	9. The fuel tank vent is restricted.	9. Contact your Authorized Service Dealer.
	10. The injection pump timing is incorrect.	10. Contact your Authorized Service Dealer.
	11. The injection pump is damaged.	11. Contact your Authorized Service Dealer.
Excessive black smoke from exhaust.	1. Excessive loading.	1. Reduce load; use lower ground speed.
	2. The air cleaner filters are dirty.	2. Service the air filters.
	3. Incorrect fuel is in the fuel system.	3. Drain the fuel system and refill with specified fuel.
	4. The injection pump timing is incorrect.	4. Contact your Authorized Service Dealer.
	5. The injection pump is damaged.	5. Contact your Authorized Service Dealer.
	6. The injection nozzles are damaged.	6. Contact your Authorized Service Dealer.
Excessive white smoke from exhaust.	1. The key was turned to the start position before the glow plug light turned off.	1. Turn the key to the run position and allow the glow plug light to turn off before starting the engine.
	2. The engine temperature is low.	2. Check the thermostat.
	3. The glow plugs are inoperative.	3. Check the fuse, glow plugs and wiring.
	4. The injection pump timing is incorrect.	4. Contact your Authorized Service Dealer.
	5. The injection nozzles are damaged.	5. Contact your Authorized Service Dealer.
	6. Low compression	6. Contact your Authorized Service Dealer.
Traction unit does not drive.	1. The parking brake is on.	1. Release the parking brake.
	2. Hydraulic fluid level low.	2. Add hydraulic fluid to the reservoir.
	3. The tow valves are open.	3. Close the tow valves.
	4. Flow divider valve lever is in 9 o'clock position.	4. Move lever to 12 o'clock to 10 o'clock position.
	5. Traction pump drive coupler is loose or broken.	5. Contact your Authorized Service Dealer.
	6. Pump and/or wheel motor is damaged.	6. Contact your Authorized Service Dealer.
	7. Control valve is damaged.	7. Contact your Authorized Service Dealer.
	8. Relief valve is damaged.	8. Contact your Authorized Service Dealer.

Schematics

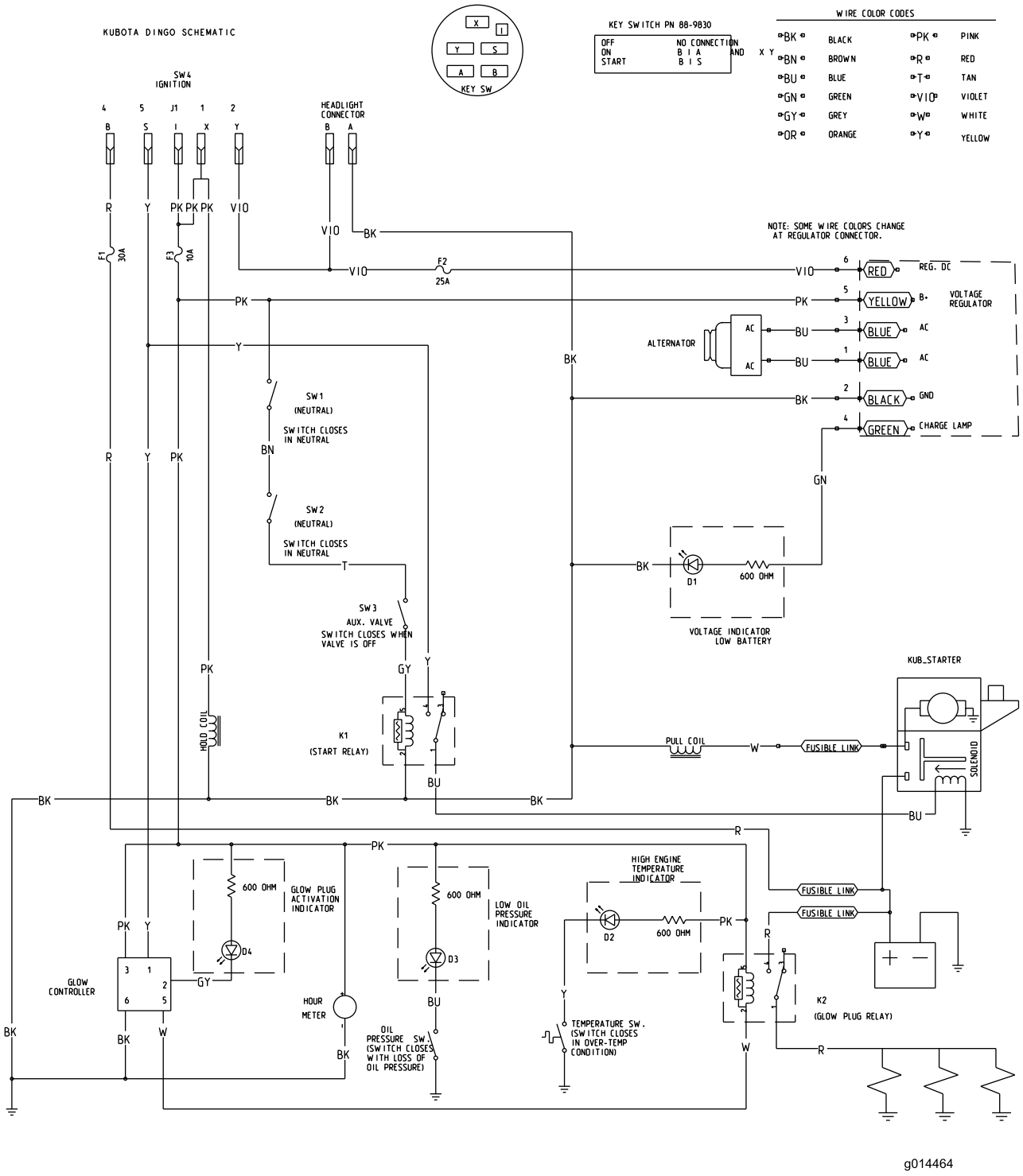

g014464

Electrical Schematic (Rev. A)

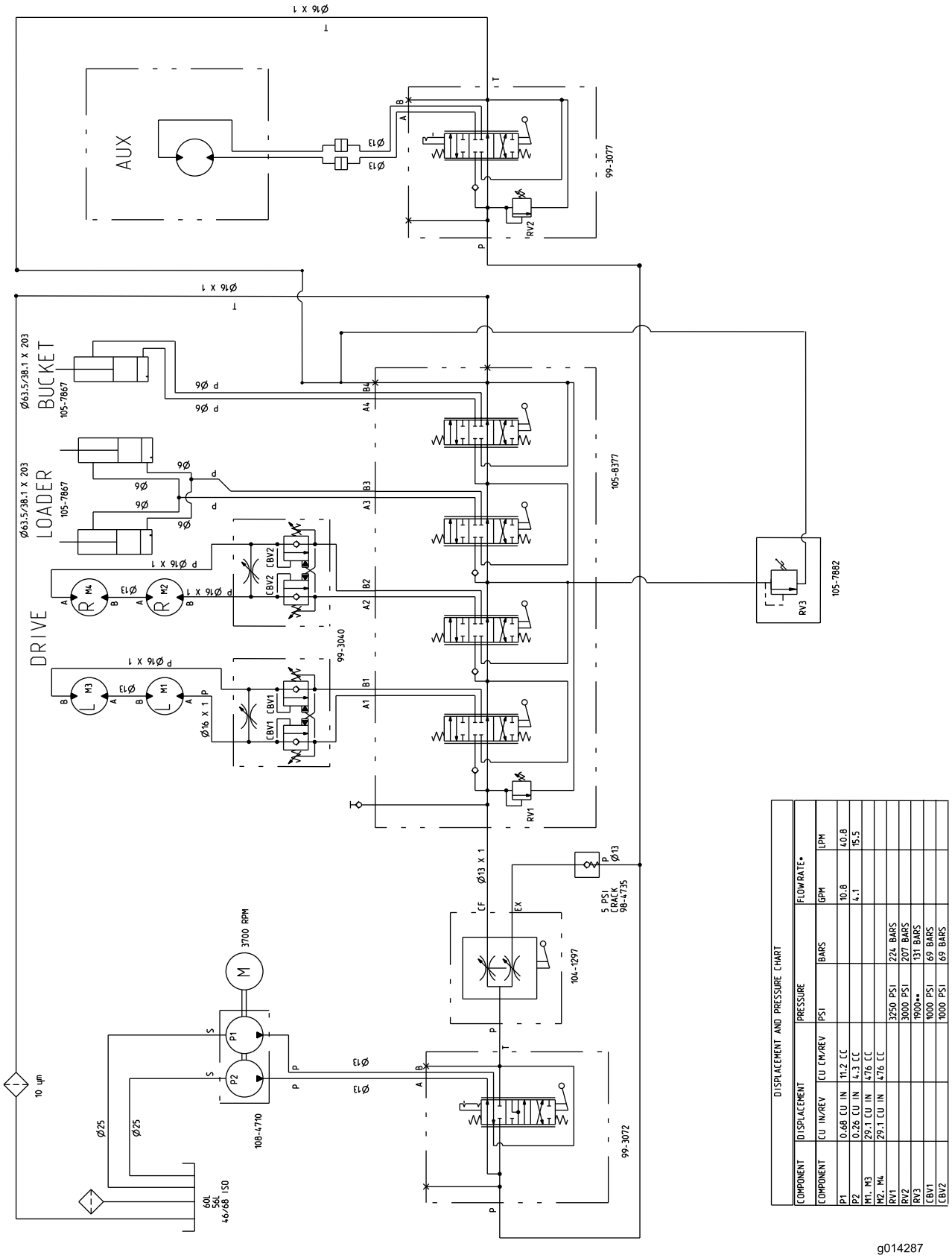

DISPLACEMENT AND PRESSURE CHART						
COMPONENT	DISPLACEMENT		PRESSURE		FLOWRATE*	
COMPONENT	CU IN/REV	CU CM/REV	PSI	BARS	GPM	LPM
P1	0.68 CU IN	11.2 CC			10.8	40.8
P2	0.26 CU IN	4.3 CC			4.1	15.5
M1. M3	29.1 CU IN	476 CC				
M2. M4	29.1 CU IN	476 CC				
RV1			3250 PSI	224 BARS		
RV2			3000 PSI	207 BARS		
RV3			1900**	131 BARS		
CBV1			1000 PSI	69 BARS		
CBV2			1000 PSI	69 BARS		

* FLOWRATE CALCULATED AT 3700 RPM AND 98% EFFICIENCY.
** CRACKING PRESSURE. FULL FLOW(~8 GPM) RELIEF PRESSURE APPROX. 2100 PSI.

g014287

Hydraulic Schematic (Rev. A)

Notes:

Notes:

Notes:

Toro Compact Utility Equipment Warranty

A One-Year Limited Warranty

CUE Products

Conditions and Products Covered

The Toro® Company and its affiliate, Toro Warranty Company, pursuant to an agreement between them, jointly warrant your Toro Compact Utility Equipment ("Product") to be free from defects in materials or workmanship. The following time periods apply from the date of purchase:

Products	Warranty Period
Loaders, Trenchers, Stump Grinders, Chippers, Log Splitters and Attachments	1 year or 1000 operating hours, whichever occurs first
Kohler Engines	3 years
All other Engines	2 years

Where a warrantable condition exists, we will repair the Product at no cost to you including diagnosis, labor, and parts.

Instructions for Obtaining Warranty Service

If you think that your Toro Product contains a defect in materials or workmanship, follow this procedure:

1. Contact any Authorized Toro Compact Utility Equipment (CUE) Service Dealer to arrange service at their dealership. To locate a dealer convenient to you, access our website at www.Toro.com. You may also call our Toro Customer Care Department toll free at 888-865-5676 (U.S. customers) or 888-865-5691 (Canadian customers).
2. Bring the product and your proof of purchase (sales receipt) to the Service Dealer.
3. If for any reason you are dissatisfied with the Service Dealer's analysis or with the assistance provided, contact us at:

   LCB Customer Care Department
   Toro Warranty Company
   8111 Lyndale Avenue South
   Bloomington, MN 55420-1196
   Toll Free: 888-865-5676 (U.S. customers)
   Toll Free: 888-865-5691 (Canada customers)

Owner Responsibilities

You must maintain your Toro Product by following the maintenance procedures described in the *Operator's Manual*. Such routine maintenance, whether performed by a dealer or by you, is at your expense. Parts scheduled for replacement as required maintenance ("Maintenance Parts"), are warranted for the period of time up to the scheduled replacement time for that part. Failure to perform required maintenance and adjustments can be grounds for disallowing a warranty claim.

Items and Conditions Not Covered

Not all product failures or malfunctions that occur during the warranty period are defects in materials or workmanship. This express warranty does not cover the following:

- Product failures which result from the use of non-Toro replacement parts, or from installation and use of add-on, modified, or unapproved accessories
- Product failures which result from failure to perform required maintenance and/or adjustments
- Product failures which result from operating the Product in an abusive, negligent or reckless manner
- Parts subject to consumption through use unless found to be defective. Examples of parts which are consumed, or used up, during normal Product operation include, but are not limited to, teeth, tines, blades, spark plugs, tires, tracks, filters, chains, etc.
- Failures caused by outside influence. Items considered to be outside influence include, but are not limited to, weather, storage practices, contamination, use of unapproved coolants, lubricants, additives, or chemicals, etc.
- Normal "wear and tear" items. Normal "wear and tear" includes, but is not limited to, worn painted surfaces, scratched decals or windows, etc.
- Any component covered by a separate manufacturer's warranty
- Pickup and delivery charges

General Conditions

Repair by an Authorized Toro Compact Utility Equipment (CUE) Service Dealer is your sole remedy under this warranty.

Neither The Toro® Company nor Toro Warranty Company is liable for indirect, incidental or consequential damages in connection with the use of the Toro Products covered by this warranty, including any cost or expense of providing substitute equipment or service during reasonable periods of malfunction or non-use pending completion of repairs under this warranty. All implied warranties of merchantability and fitness for use are limited to the duration of this express warranty. Some states do not allow exclusions of incidental or consequential damages, or limitations on how long an implied warranty lasts, so the above exclusions and limitations may not apply to you.

This warranty gives you specific legal rights, and you may also have other rights which vary from state to state.

Except for the engine warranty coverage and the Emissions warranty referenced below, if applicable, there is no other express warranty. The Emissions Control System on your Product may be covered by a separate warranty meeting requirements established by the U.S. Environmental Protection Agency (EPA) or the California Air Resources Board (CARB). The hour limitations set forth above do not apply to the Emissions Control System Warranty. Refer to the California Emission Control Warranty Statement supplied with your Product or contained in the engine manufacturer's documentation for details.

Countries Other than the United States or Canada

Customers who have purchased Toro products exported from the United States or Canada should contact their Toro Distributor (Dealer) to obtain guarantee policies for your country, province, or state. If for any reason you are dissatisfied with your Distributor's service or have difficulty obtaining guarantee information, contact the Toro importer. If all other remedies fail, you may contact us at Toro Warranty Company.