Form No. 3368-128 Rev A

315 MHz Certification Kit

Pro Sweep 5200 Turf Sweeper

Model No. 07061

Installation Instructions

Removing the Existing Controller

1. Unplug the sweeper power connection from the tow vehicle.
2. Unplug the cables from the controller (Figure 1).

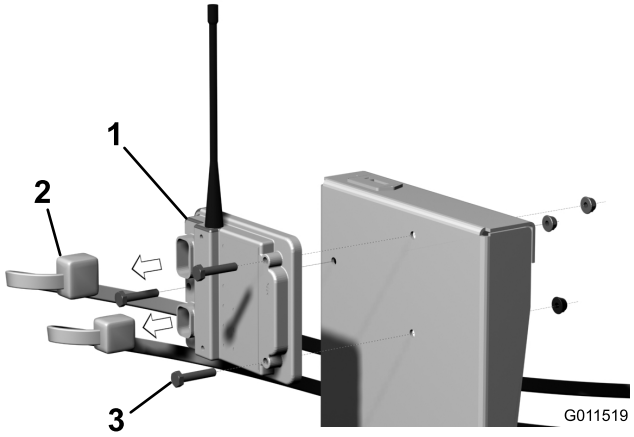

Figure 1

1. Controller
2. Cables
3. Screws

3. Remove the 3 screws that secure the controller to the front of the blower frame (Figure 1).
4. Remove the controller from the frame, and retain the mounting screws.

Installing the New Controller

1. Mount the new controller to the front of the sweeper frame with the 3 screws that you previously removed.
2. Plug the cables into the controller.
3. Synchronize the remote according to the *Operator's Manual*, and perform a function check to verify that the remote is operating properly.

© 2011—The Toro® Company
8111 Lyndale Avenue South
Bloomington, MN 55420

Register at www.Toro.com.

Original Instructions (EN)
Printed in the USA
All Rights Reserved