Form No. 3368-603 Rev A

TORO®

Count on it.

Parts Catalog

22in Recycler® Lawn Mower

Model No. 20332C—Serial No. 311000001 and Up

Ordering Replacement Parts

To order replacement parts, please supply the part number, the quantity, and the description of each part desired.

Understanding Reference Numbers

Each identified part in an illustration has a reference number. The reference number for a part also appears in the parts list, along with other information about the part.

This catalog uses two special reference number formats, one to indicate parts in a service assembly and another to indicate the quantity of a given part in an illustration.

Service Assembly Reference Numbers

Parts in service assemblies have reference numbers in the form a:b. The a represents the reference number of the entire service assembly and the b represents a sequential number unique to each part within the service assembly.

For example, a wheel assembly might be identified by reference number 6, the tire by 6:1, the valve by 6:2, and the wheel by 6:3. When you order the assembly identified by reference number 6, you receive all parts identified by reference numbers 6:1,6:2, and 6:3. However, you may also order any part individually. Reference numbers of this type appear in illustration and in parts lists.

Reference Numbers Indicating Quantity

In an illustration, if a reference number indicates more than one part, the reference number has the form nX y. The n represents the quantity of the part, the X is the multiplication symbol, and the y represents the reference number.

For example, in an illustration, the reference number 2X 37 means that two of the parts identified by reference number 37 are indicated.

List of Abbreviations

AR: as required

ASM: assembly

BBC: blade brake control

BHTF: button head thread forming

CARR: carriage

CCW: counter clockwise

CW: clockwise

DEG: degrees

DPA: Dual Point Adjustment

ECM: electronic control module

EXT: external

FH: flat head

GA: gauge

HD: heavy-duty

HF: hex flange

HH: hex head

HHF: hex head flange

HHFTF: hex head flange thread forming

HJ: hex jam

HLH: hex lag head

HOC: height-of-cut

HSBH: hex socket button head

HSFH: hex socket flat head

HSH: hex socket head

HWH: hex washer head

HWHTF: hex washer head thread forming

HYD: hydraulic

LH: left hand

LP: Liquid Propane

NI: nylon insert

NPTF: national pipe thread fine

PFH: phillips flat head

PPH: phillips pan head

PPHTF: phillips pan head thread forming

PRH: phillips round head

PTH: phillips truss head

PTO: power-take-off

RH: right hand

ROPS: roll-over protection system

RRB: rear roller brush

SFH: slotted fillister head

SHH: slotted hex head

SHWH: slotted hex washer head

SPH: slotted pan head

SQH: square head

SRH: slotted round head

STD: standard

TAP: self tapping

TTH: torx truss head

© 2011—The Toro® Company
8111 Lyndale Avenue South
Bloomington, MN 55420

Contact us at www.Toro.com.
Printed in the USA.
All Rights Reserved

Contents

Housing, Side Chute and Rear Door Assembly 4
Front Wheel and Height-of-Cut Assembly 5
Transmission and Rear Wheel Drive Assembly 6
Engine and Blade Assembly 7
Upper Handle Assembly 8
Rear Bag Assembly 9
Attachments and Accessories 10

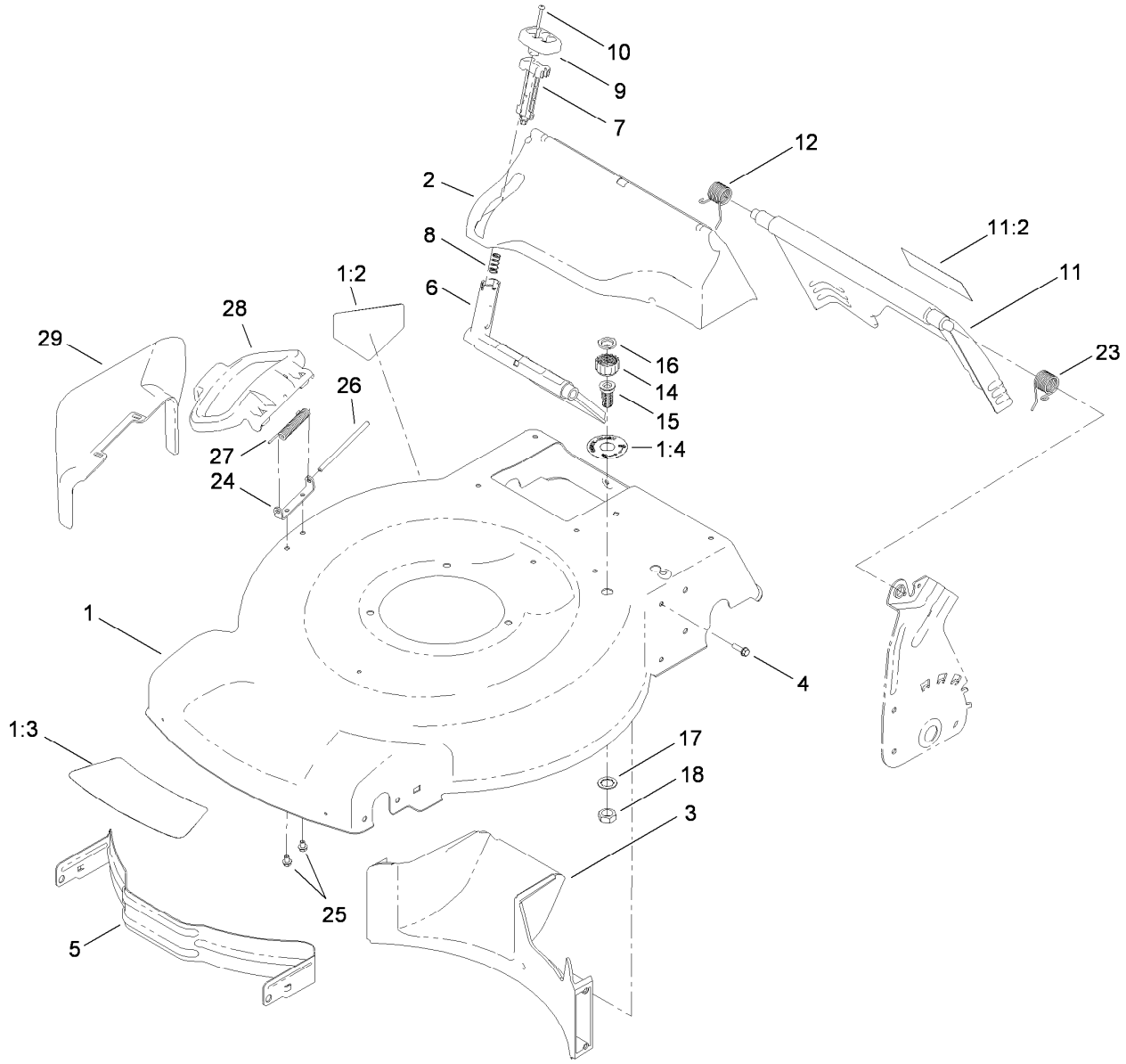

Housing, Side Chute and Rear Door Assembly

Ref.	Part Number	Qty.	Description
1	117-1084	1	Housing ASM
1:2	94-8072	1	Decal-Danger
1:3	115-4676	1	Decal-Recycler
1:4	112-8867	1	Decal-Port, Washout
2	115-4677	1	Chute-Recycle
3	114-7961	1	Baffle-Rear
4	46-8091	9	Screw-HWH
5	114-7963-01	1	Baffle-Front
6	114-7960	1	Deflector-Recycle
7	114-7959	1	Latch-Recycle
8	117-1031	1	Spring-Compression
9	114-7958	1	Knob-Recycle
10	32104-120	2	Screw-PPH
11	114-7992	1	Rear Door ASM
11:2	114-7982	1	Decal-Warning

Ref.	Part Number	Qty.	Description
12	114-7924	1	Spring-Torsion
14	112-6401	1	Coupling-Hose, Washout Port
15	112-6400	1	Port-Washout
16	112-6438	1	Washer-Seal, Washout Port
17	3254-5	1	Washer-Tooth, Internal
18	3218-6	1	Nut-Jam
23	115-2859	1	Spring-Torsion
24	112-6416	1	Bracket-Cover
25	99-8445	2	Screw-HWH
26	99-5291	1	Rod-Cover
27	99-5293	1	Spring-Torsion
28	115-8449	1	Deflector-Side
29	115-8447	1	Chute-Discharge, Side

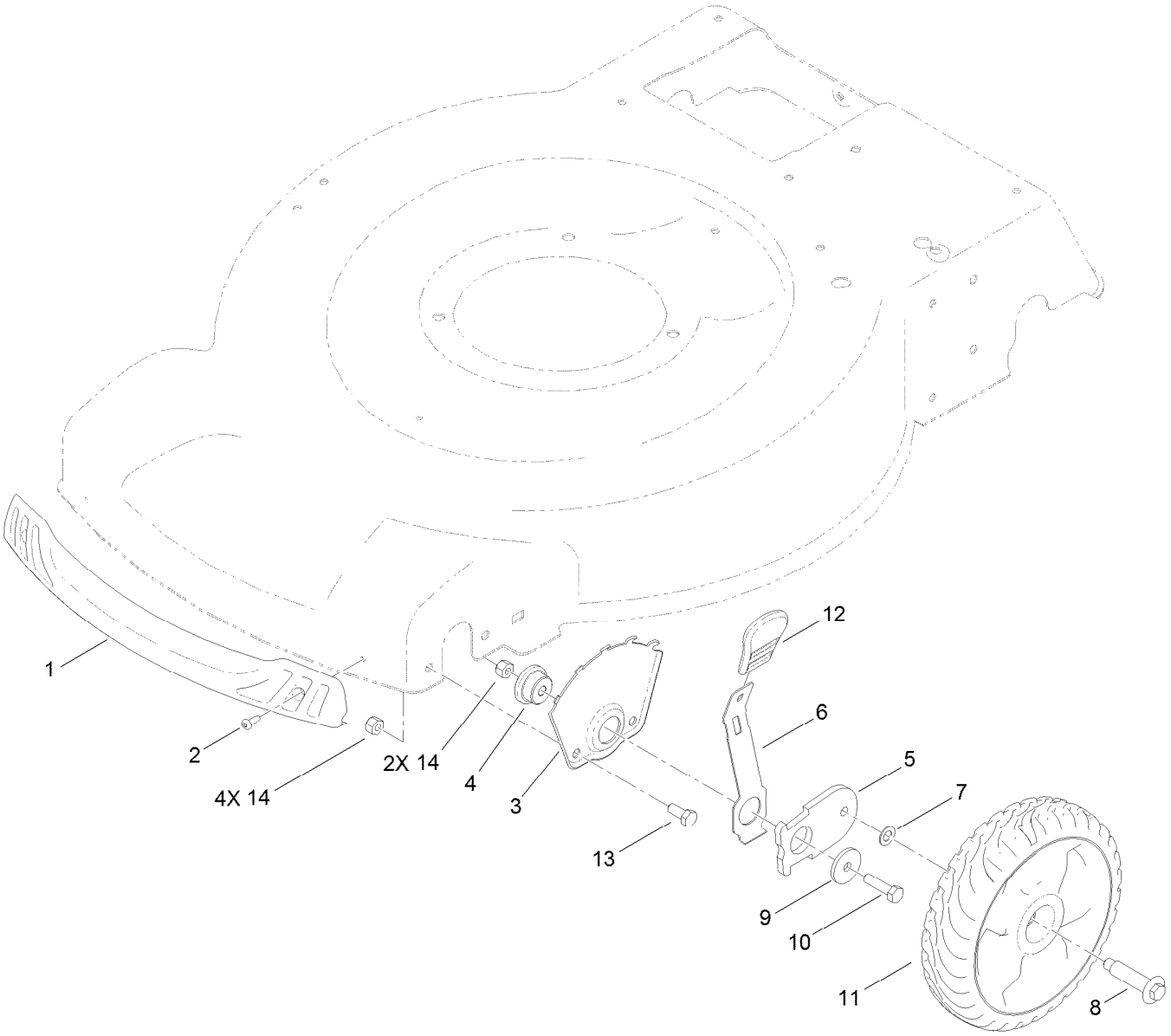

Front Wheel and Height-of-Cut Assembly

Ref.	*Part Number*	*Qty.*	*Description*
1	114-7987	1	Bumper
2	105-6849	2	Screw-Thread Forming
3	115-1956-03	2	Plate-HOC, Front
4	105-1818	2	Bushing-Mount, HOC
5	105-1807	2	Arm-Pivot, Front
6	105-1809	2	Arm-Spring
7	40-1940	2	Washer
8	614650	2	Bolt-Shoulder
9	105-3048	2	Washer-Flat
10	322-6	2	Screw-HH
11	115-2894	2	8 Inch Wheel ASM
12	110-0549	2	Knob-HOC
13	322-3	4	Screw-HH
14	3296-29	6	Nut-Lock, NI

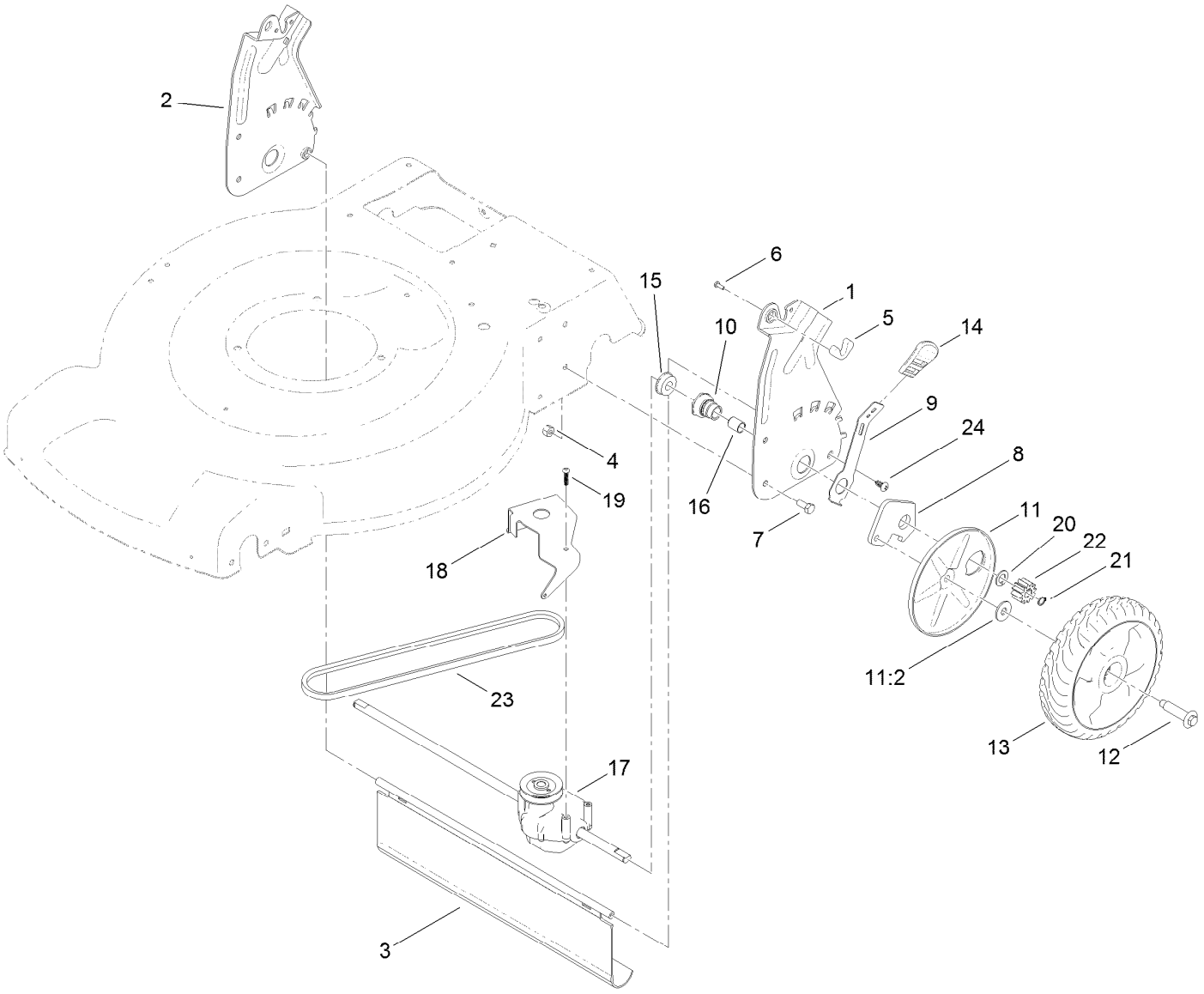

Transmission and Rear Wheel Drive Assembly

Ref.	*Part Number*	*Qty.*	*Description*
1	114-7955-03	1	Plate-Rear, LH (HOC)
2	114-7956-03	1	Plate-Rear, RH (HOC)
3	115-2893	1	Shield-Trailing
4	3296-29	4	Nut-Lock, NI
5	115-8406	2	Anchor-Bag
6	105-9437	2	Screw-PPH
7	322-3	4	Screw-HH
8	108-9781	2	Arm-Pivot, Rear
9	108-9780	2	Arm-Spring
10	108-9779	2	Retainer-Bushing, HOC
11	110-1792	2	Wheel Cover ASM
11:2	614426	1	Washer-Stepped
12	614650	2	Bolt-Shoulder

Ref.	*Part Number*	*Qty.*	*Description*
13	115-4695	2	8 Inch Wheel Gear ASM
14	110-0549	2	Knob-HOC
15	104-8699	2	Bearing-Ball
16	108-9782	2	Bushing-Sleeve
17	115-4652	1	Transmission
18	114-7977-03	1	Bracket-Transmission
19	120-0185	3	Screw-Pan Head, T20
20	110-7191	2	Washer-Thrust
21	32151-61	2	Ring-Retaining
22	115-4668	2	Gear-Pinion, 12T
23	115-4669	1	Belt-V
24	117-1092	2	Screw-PTH

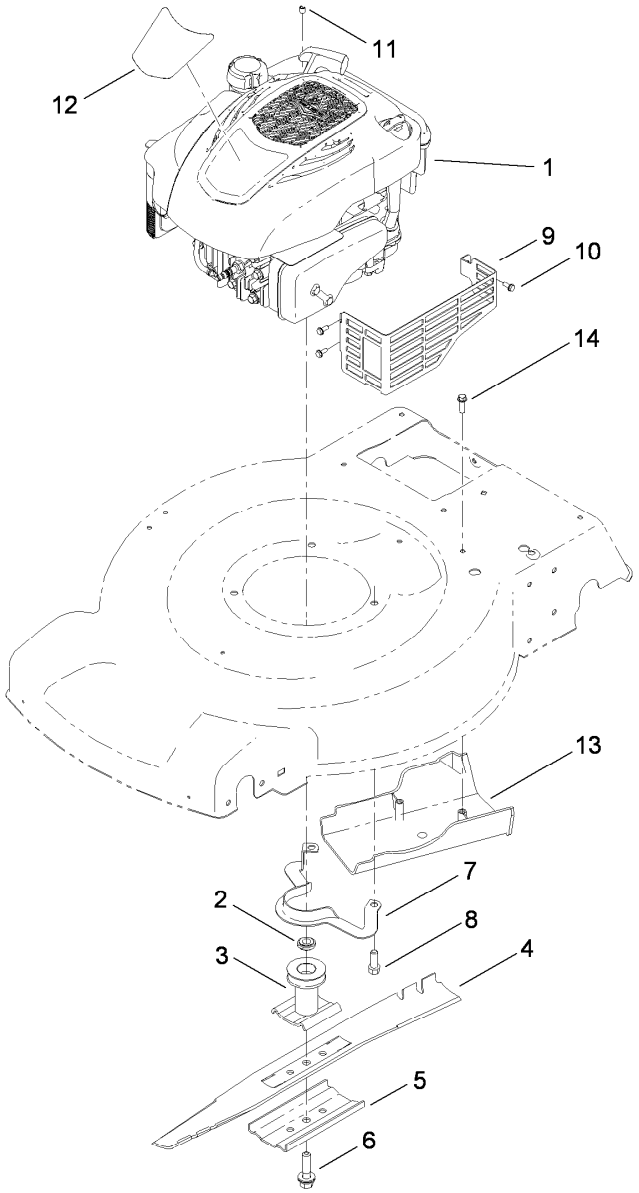

Engine and Blade Assembly

Ref.	*Part Number*	*Qty.*	*Description*
1		1	Engine-Briggs, 128T02-3216-B1 ●■
2	106-3999	1	Spacer-Driver
3	106-3987	1	Blade Driver ASM
4	108-9764-03	1	Blade-22 Inch
5	108-3766-03	1	Support-Blade
6	105-8579	1	Bolt-Blade
7	105-3030-03	1	Guide-Belt
8	95-1726	3	Screw-Taptite
9	104-7577-03	1	Shield-Muffler
10	32144-1	3	Screw-Taptite
11	2210-316	1	Stop-Rope
12	119-0302	1	Decal-Shroud
13	114-7937	1	Cover-Belt
14	46-8091	2	Screw-HWH

● Not serviced separately

■ Obtain parts from www.briggsandstratton.com

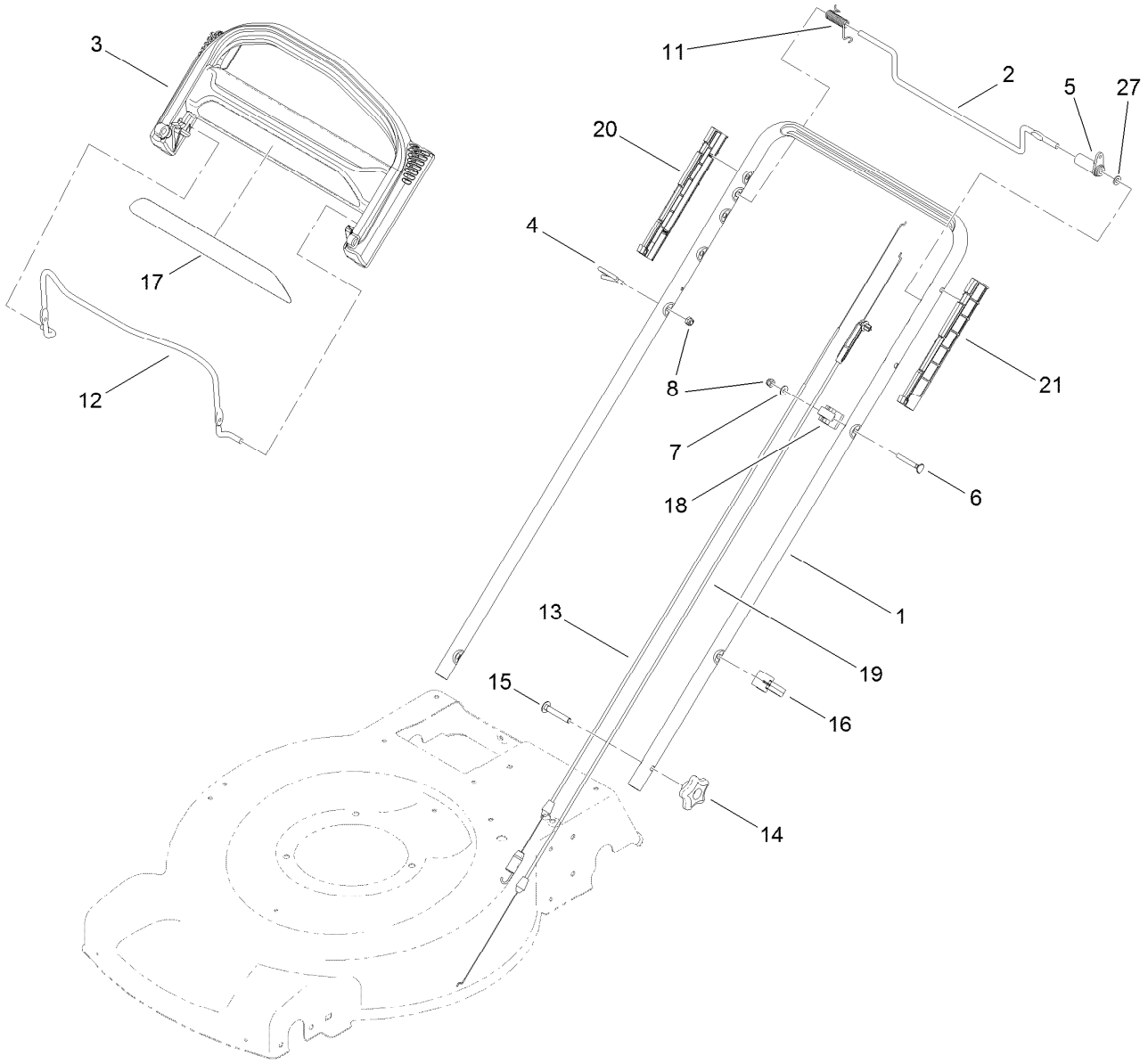

Upper Handle Assembly

Ref.	Part Number	Qty.	Description
1	119-3810-05	1	Handle
2	99-1588	1	Bar-Control, Traction
3	104-8678	1	Handle-Control
4	86-9671	1	Guide-Rope
5	99-1589	1	Lever-Traction
6	95-4453	1	Screw
7	3256-1	1	Washer-Flat
8	3296-73	2	Nut-Lock, NI
11	104-8690	1	Spring-Torsion
12	104-8679-03	1	Bail-Brake

Ref.	Part Number	Qty.	Description
13	115-8435	1	Cable-Traction
14	117-5976	2	Knob-Handle, Locking
15	3230-6	2	Screw-CARR
16	114-7988	1	Guide-Cable
17	117-1019	1	Decal
18	99-5239	1	Anchor-Cable
19	115-8437	1	Cable-Brake
20	105-6841	1	Guide-RH
21	105-6842	1	Guide-LH
27	3256-23	1	Washer-Flat

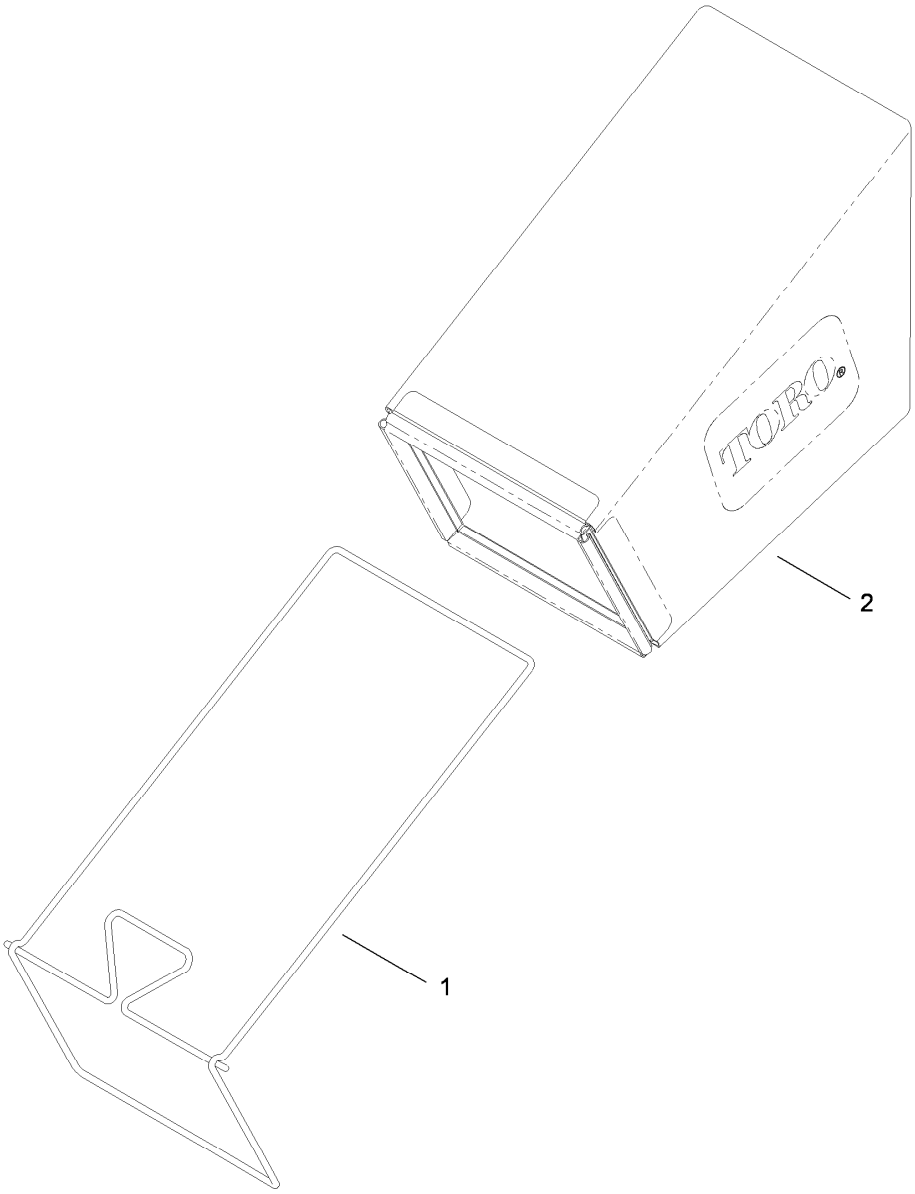

Rear Bag Assembly

Ref.	*Part Number*	*Qty.*	*Description*
1	114-2679-03	1	Frame-Bag
2	115-4673	1	Grass Bag ASM

Attachments and Accessories

For 20332C 22in Recycler Lawn Mower

Product Name	Model/Part
Traction Assist Handle Kit	108-8120
22 inch Blade Kit	59534

Notes:



Count on it.