Form No. 3368-614 Rev A

TORO®

Count on it.

Parts Catalog

55cm Recycler® Lawn Mower

Model No. 20958—Serial No. 311000001 and Up

Ordering Replacement Parts

To order replacement parts, please supply the part number, the quantity, and the description of each part desired.

Understanding Reference Numbers

Each identified part in an illustration has a reference number. The reference number for a part also appears in the parts list, along with other information about the part.

This catalog uses two special reference number formats, one to indicate parts in a service assembly and another to indicate the quantity of a given part in an illustration.

Service Assembly Reference Numbers

Parts in service assemblies have reference numbers in the form a:b. The a represents the reference number of the entire service assembly and the b represents a sequential number unique to each part within the service assembly.

For example, a wheel assembly might be identified by reference number 6, the tire by 6:1, the valve by 6:2, and the wheel by 6:3. When you order the assembly identified by reference number 6, you receive all parts identified by reference numbers 6:1,6:2, and 6:3. However, you may also order any part individually. Reference numbers of this type appear in illustration and in parts lists.

Reference Numbers Indicating Quantity

In an illustration, if a reference number indicates more than one part, the reference number has the form nX y. The n represents the quantity of the part, the X is the multiplication symbol, and the y represents the reference number.

For example, in an illustration, the reference number 2X 37 means that two of the parts identified by reference number 37 are indicated.

List of Abbreviations

AR: as required

ASM: assembly

BBC: blade brake control

BHTF: button head thread forming

CARR: carriage

CCW: counter clockwise

CW: clockwise

DEG: degrees

DPA: Dual Point Adjustment

ECM: electronic control module

EXT: external

FH: flat head

GA: gauge

HD: heavy-duty

HF: hex flange

HH: hex head

HHF: hex head flange

HHFTF: hex head flange thread forming

HJ: hex jam

HLH: hex lag head

HOC: height-of-cut

HSBH: hex socket button head

HSFH: hex socket flat head

HSH: hex socket head

HWH: hex washer head

HWHTF: hex washer head thread forming

HYD: hydraulic

LH: left hand

LP: Liquid Propane

NI: nylon insert

NPTF: national pipe thread fine

PFH: phillips flat head

PPH: phillips pan head

PPHTF: phillips pan head thread forming

PRH: phillips round head

PTH: phillips truss head

PTO: power-take-off

RH: right hand

ROPS: roll-over protection system

RRB: rear roller brush

SFH: slotted fillister head

SHH: slotted hex head

SHWH: slotted hex washer head

SPH: slotted pan head

SQH: square head

SRH: slotted round head

STD: standard

TAP: self tapping

TTH: torx truss head

© 2011—The Toro® Company
8111 Lyndale Avenue South
Bloomington, MN 55420

Contact us at www.Toro.com.
Printed in the USA.
All Rights Reserved

Contents

Housing and Rear Door Assembly 4
Front Wheel and Height-of-Cut Assembly 5
Transmission and Rear Wheel Drive Assembly 6
Engine and Blade Assembly 7
Upper Handle Assembly 8
Handle Component Assembly 9
Rear Bag Assembly 10
Attachments and Accessories 11

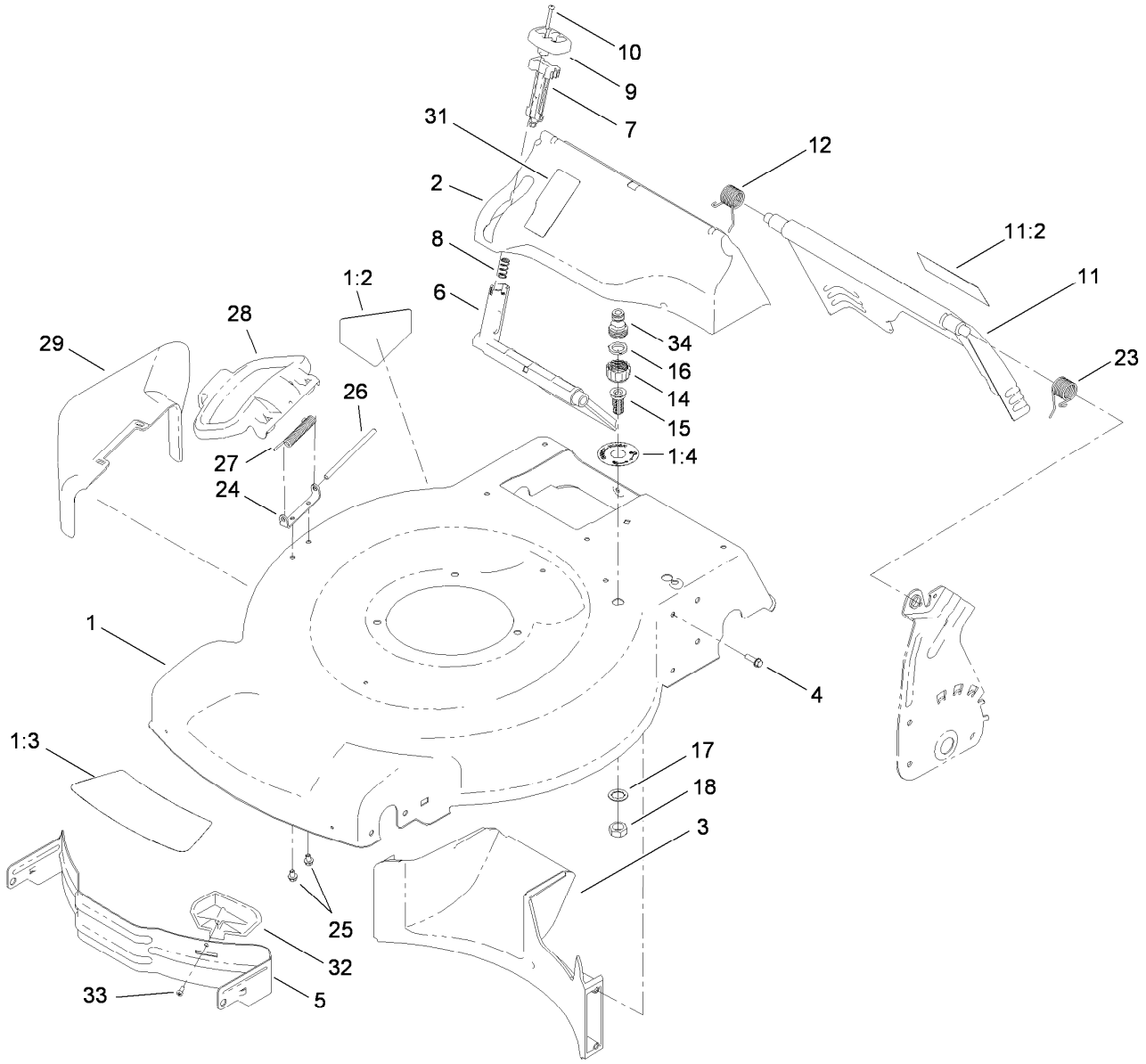

Housing and Rear Door Assembly

Ref.	Part Number	Qty.	Description
1	119-0282	1	Housing ASM
1:2	112-8760	1	Decal-Danger
1:3	119-0283	1	Decal-Recycler
1:4	112-8867	1	Decal-Port, Washout
2	115-4677	1	Chute-Recycle
3	114-7961	1	Baffle-Rear
4	46-8091	9	Screw-HWH
5	115-4667-01	1	Baffle-Front
6	114-7960	1	Deflector-Recycle
7	114-7959	1	Latch-Recycle
8	117-1031	1	Spring-Compression
9	114-7958	1	Knob-Recycle
10	32104-120	2	Screw-PPH
11	114-7992	1	Rear Door ASM
11:2	114-7982	1	Decal-Warning
12	114-7924	1	Spring-Torsion
14	112-6401	1	Coupling-Hose, Washout Port
15	112-6400	1	Port-Washout
16	112-6438	1	Washer-Seal, Washout Port
17	3254-5	1	Washer-Tooth, Internal
18	3218-6	1	Nut-Jam
23	115-2859	1	Spring-Torsion
24	112-6416	1	Bracket-Cover
25	99-8445	2	Screw-HWH
26	99-5291	1	Rod-Cover
27	99-5293	1	Spring-Torsion
28	115-8449	1	Deflector-Side
29	115-8447	1	Chute-Discharge, Side
31	119-0305	1	Decal-Bag On Demand
32	115-4672	1	Kicker-Front
33	32144-111	1	Screw-PPH
34	112-6437	1	Adapter-Connect, Quick

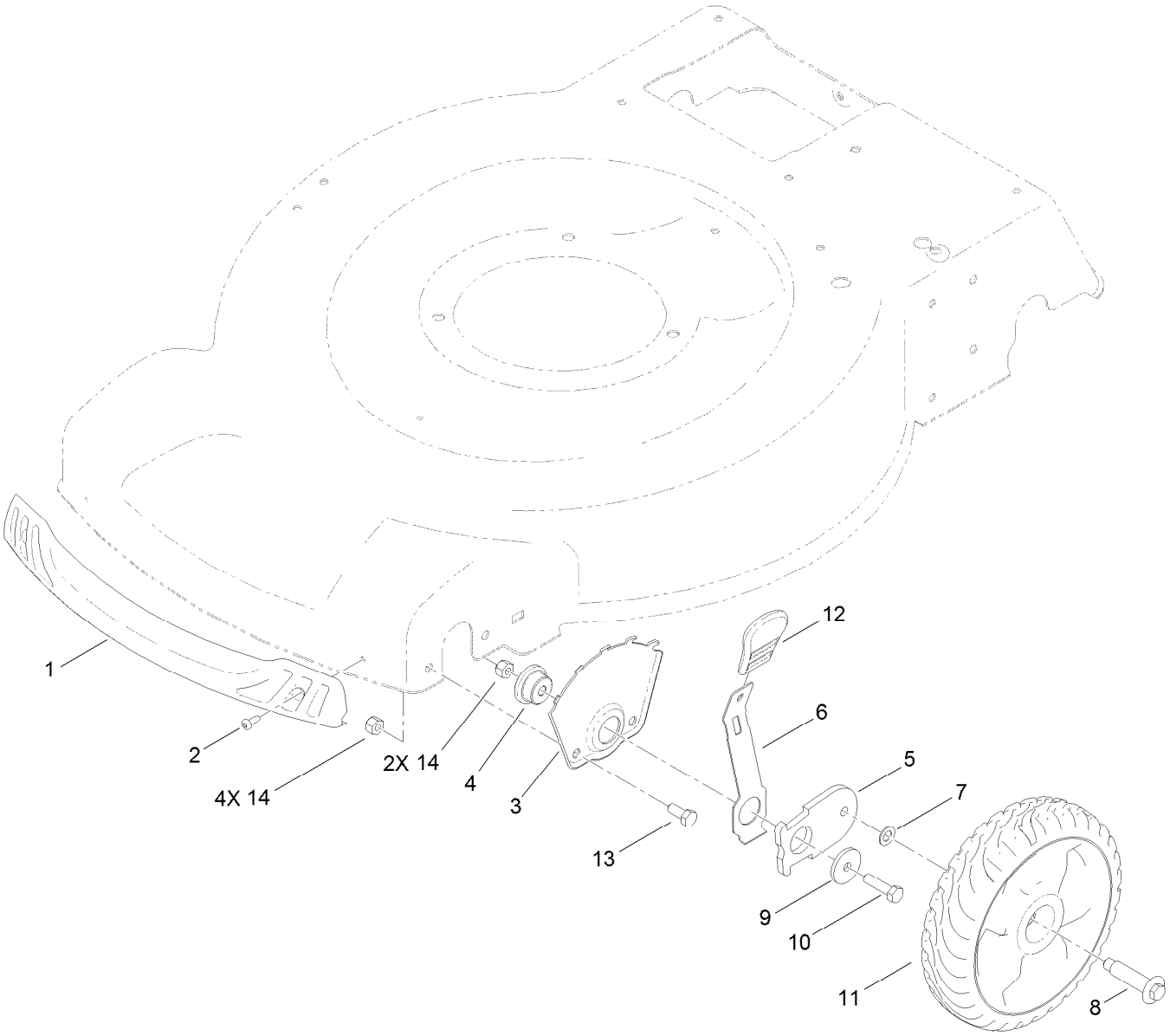

Front Wheel and Height-of-Cut Assembly

Ref.	*Part Number*	*Qty.*	*Description*
1	114-7987	1	Bumper
2	105-6849	2	Screw-Thread Forming
3	115-1956-03	2	Plate-HOC, Front
4	105-1818	2	Bushing-Mount, HOC
5	105-1807	2	Arm-Pivot, Front
6	105-1809	2	Arm-Spring
7	40-1940	2	Washer
8	614650	2	Bolt-Shoulder
9	105-3048	2	Washer-Flat
10	322-6	2	Screw-HH
11	115-2894	2	8 Inch Wheel ASM
12	110-0549	2	Knob-HOC
13	322-3	4	Screw-HH
14	3296-29	6	Nut-Lock, NI

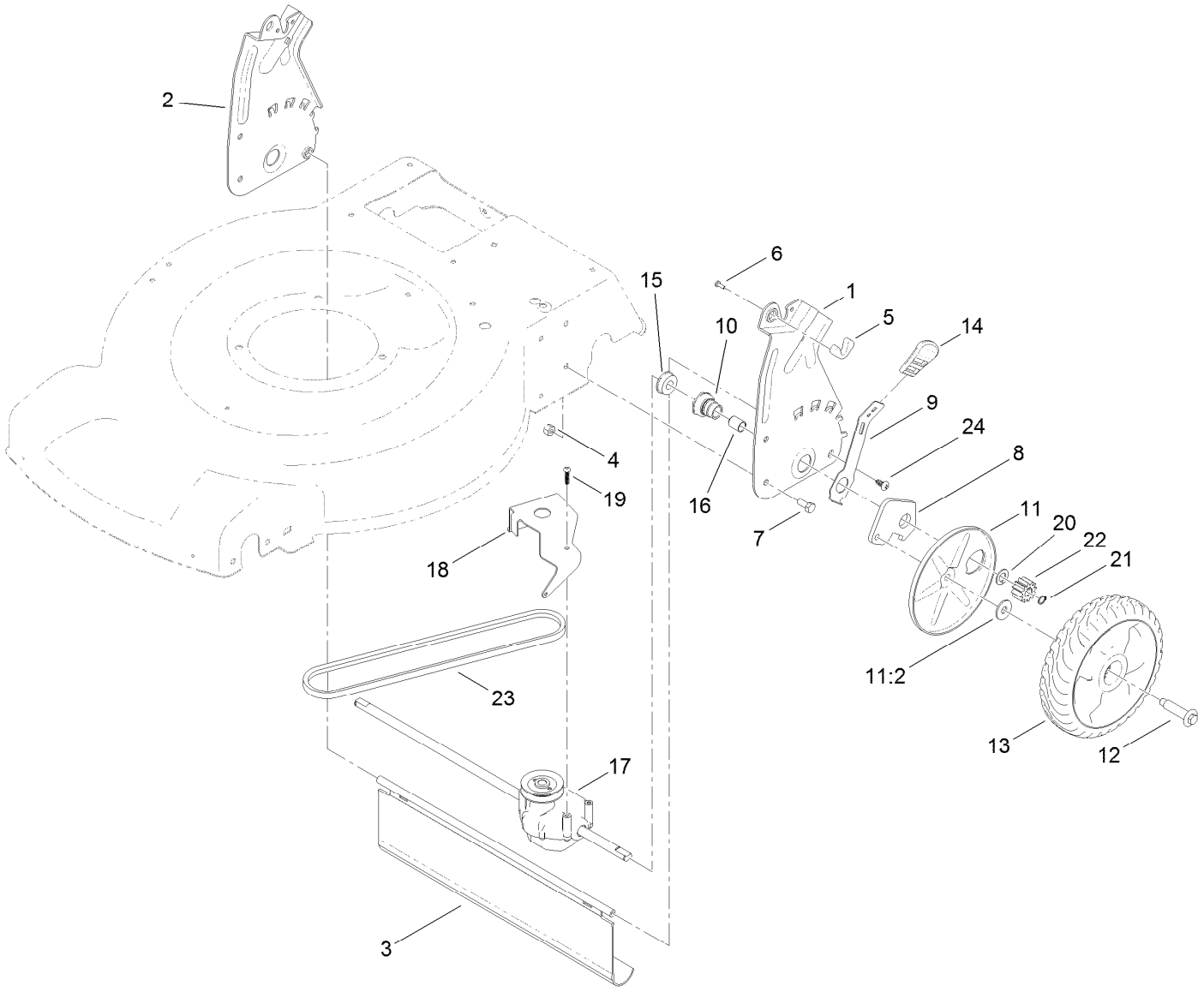

Transmission and Rear Wheel Drive Assembly

Ref.	Part Number	Qty.	Description
1	114-7955-03	1	Plate-Rear, LH (HOC)
2	114-7956-03	1	Plate-Rear, RH (HOC)
3	115-2893	1	Shield-Trailing
4	3296-29	4	Nut-Lock, NI
5	115-8406	2	Anchor-Bag
6	105-9437	2	Screw-PPH
7	322-3	4	Screw-HH
8	108-9781	2	Arm-Pivot, Rear
9	108-9780	2	Arm-Spring
10	108-9779	2	Retainer-Bushing, HOC
11	110-1792	2	Wheel Cover ASM
11:2	614426	1	Washer-Stepped
12	614650	2	Bolt-Shoulder

Ref.	Part Number	Qty.	Description
13	115-4695	2	8 Inch Wheel Gear ASM
14	110-0549	2	Knob-HOC
15	104-8699	2	Bearing-Ball
16	108-9782	2	Bushing-Sleeve
17	115-4652	1	Transmission
18	114-7977-03	1	Bracket-Transmission
19	120-0185	3	Screw-Pan Head, T20
20	110-7191	2	Washer-Thrust
21	32151-61	2	Ring-Retaining
22	115-4668	2	Gear-Pinion, 12T
23	115-4669	1	Belt-V
24	117-1092	2	Screw-PTH

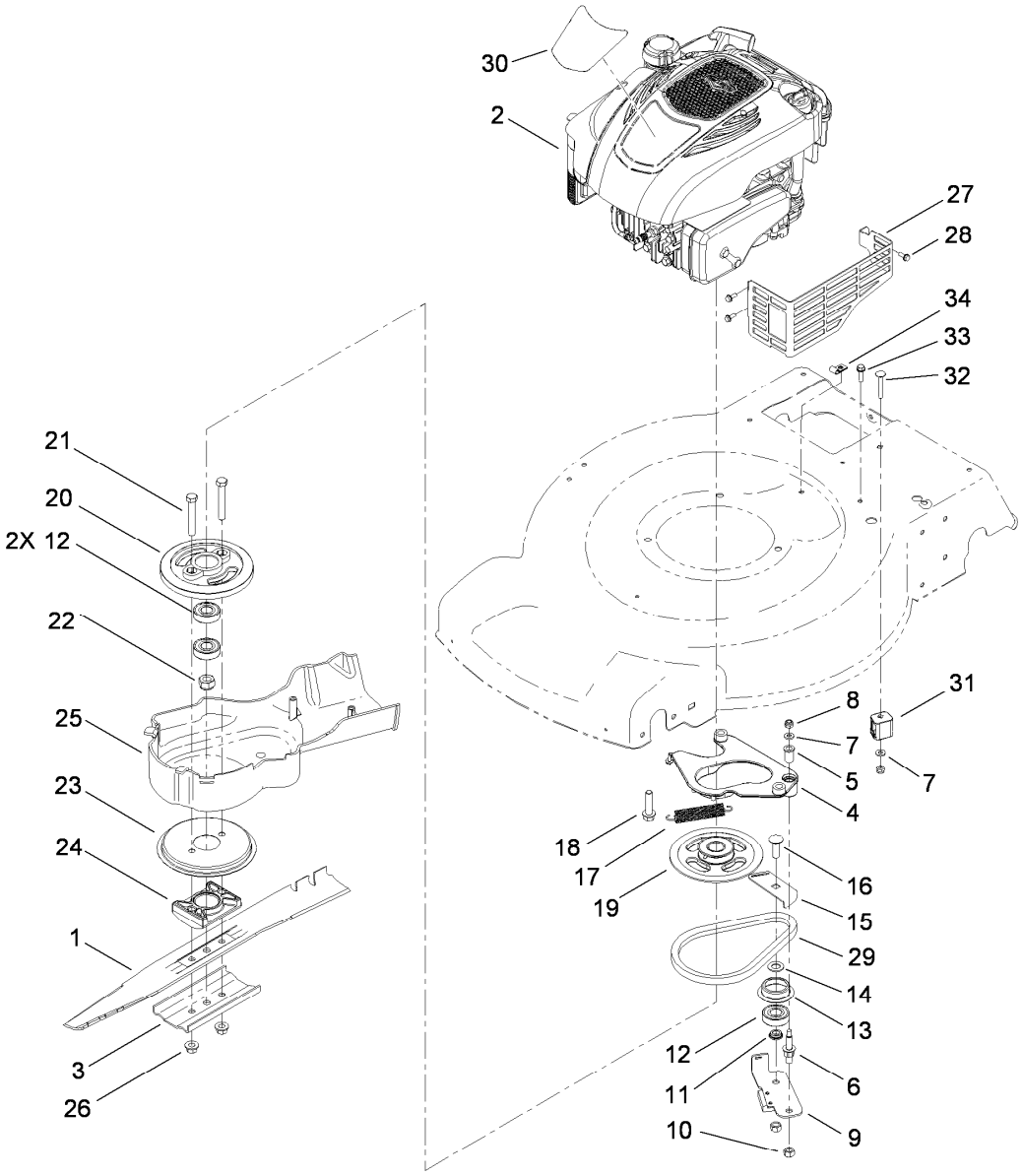

Engine and Blade Assembly

Ref.	Part Number	Qty.	Description
1	108-9783-03	1	Blade
2		1	Engine-Briggs, 126T02-0326-B1 ●■
3	108-3766-03	1	Support-Blade
4	108-9341	1	Plate-Anchor
5	107-0797	1	Bushing
6	107-0759	1	Bolt-Shoulder
7	3256-16	2	Washer-Flat
8	3296-73	2	Nut-Lock, NI
9	120-3327	1	Brake Arm ASM
10	603773	2	Nut
11	107-0758	1	Spacer-Bearing
12	100-1048	3	Bearing-Ball
13	108-3790	1	Retainer-Belt
14	605256	1	Washer-Plain
15	107-7471	1	Plate-Guide
16	3231-25	1	Screw-CARR
17	108-3792	1	Spring-Tension, Brake
18	32144-102	3	Screw-HWH
19	117-5970	1	Pulley-BBC
20	107-0754	1	Drum
21	3211-42	2	Screw-HH
22	108-9342	1	Nut-Hex
23	108-3787	1	Disc
24	107-7487	1	Support-Blade
25	115-2892	1	Cover-BBC
26	54-9190	2	Nut-Lock
27	104-7577-03	1	Shield-Muffler
28	32144-1	3	Screw-Taptite
29	110-1790	1	Belt-BBC
30	120-1935	1	Decal-Shroud
31	106-6801	1	Anchor-Cable, BBC
32	3229-5	1	Screw-CARR
33	46-8091	2	Screw-HWH
34	2412-72	1	Clip-Closed, Insulated

● Not serviced separately

■ Obtain parts from www.briggsandstratton.com

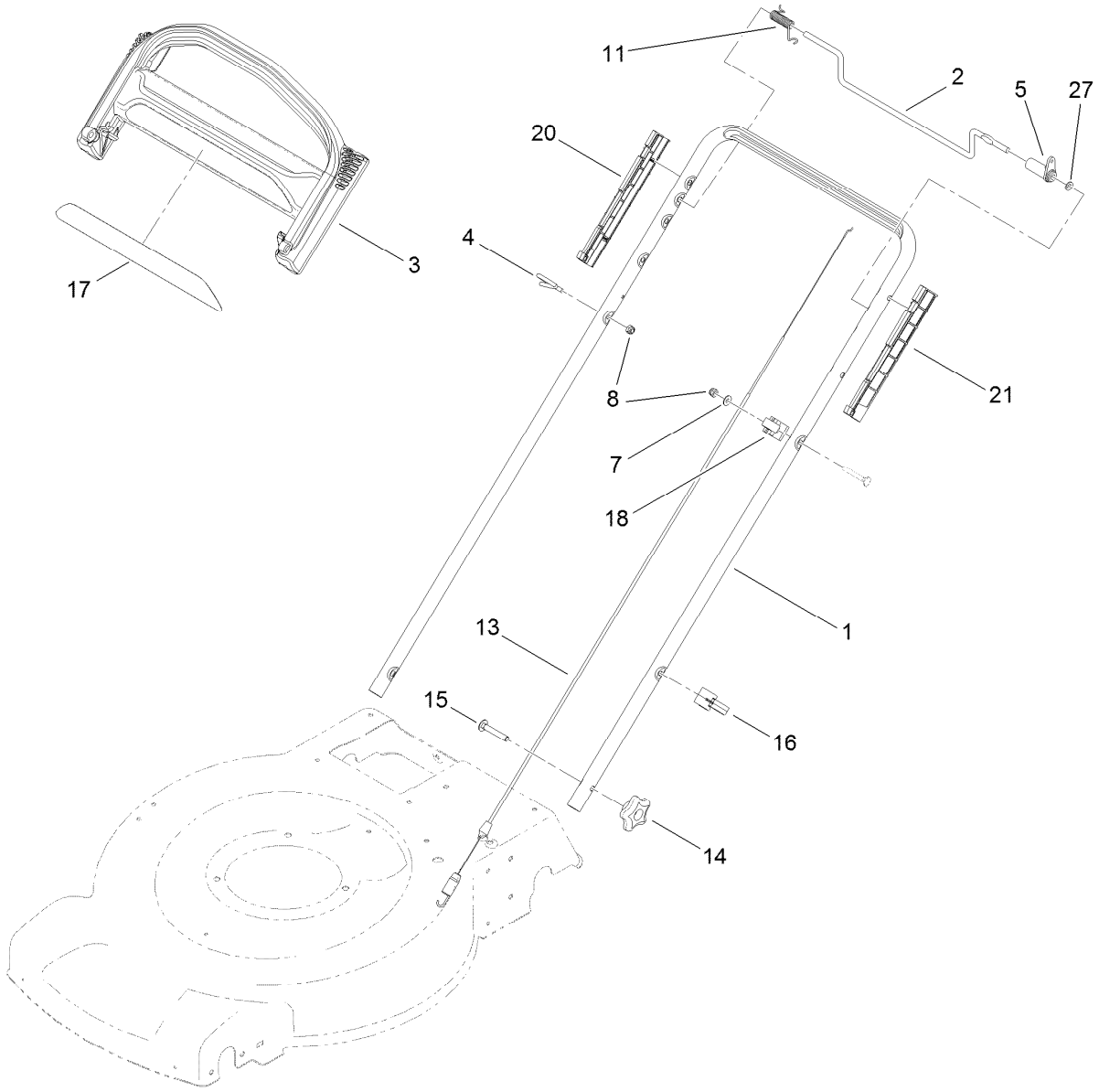

Upper Handle Assembly

Ref.	Part Number	Qty.	Description
1	119-3810-05	1	Handle
2	99-1588	1	Bar-Control, Traction
3	104-8678	1	Handle-Control
4	86-9671	1	Guide-Rope
5	99-1589	1	Lever-Traction
7	3256-1	1	Washer-Flat
8	3296-73	2	Nut-Lock, NI
11	104-8690	1	Spring-Torsion
13	115-8435	1	Cable-Traction

Ref.	Part Number	Qty.	Description
14	117-5976	2	Knob-Handle, Locking
15	3230-6	2	Screw-CARR
16	114-7988	1	Guide-Cable
17	120-3911	1	Decal-Ads, Handle
18	99-5239	1	Anchor-Cable
20	105-6841	1	Guide-RH
21	105-6842	1	Guide-LH
27	3256-23	1	Washer-Flat

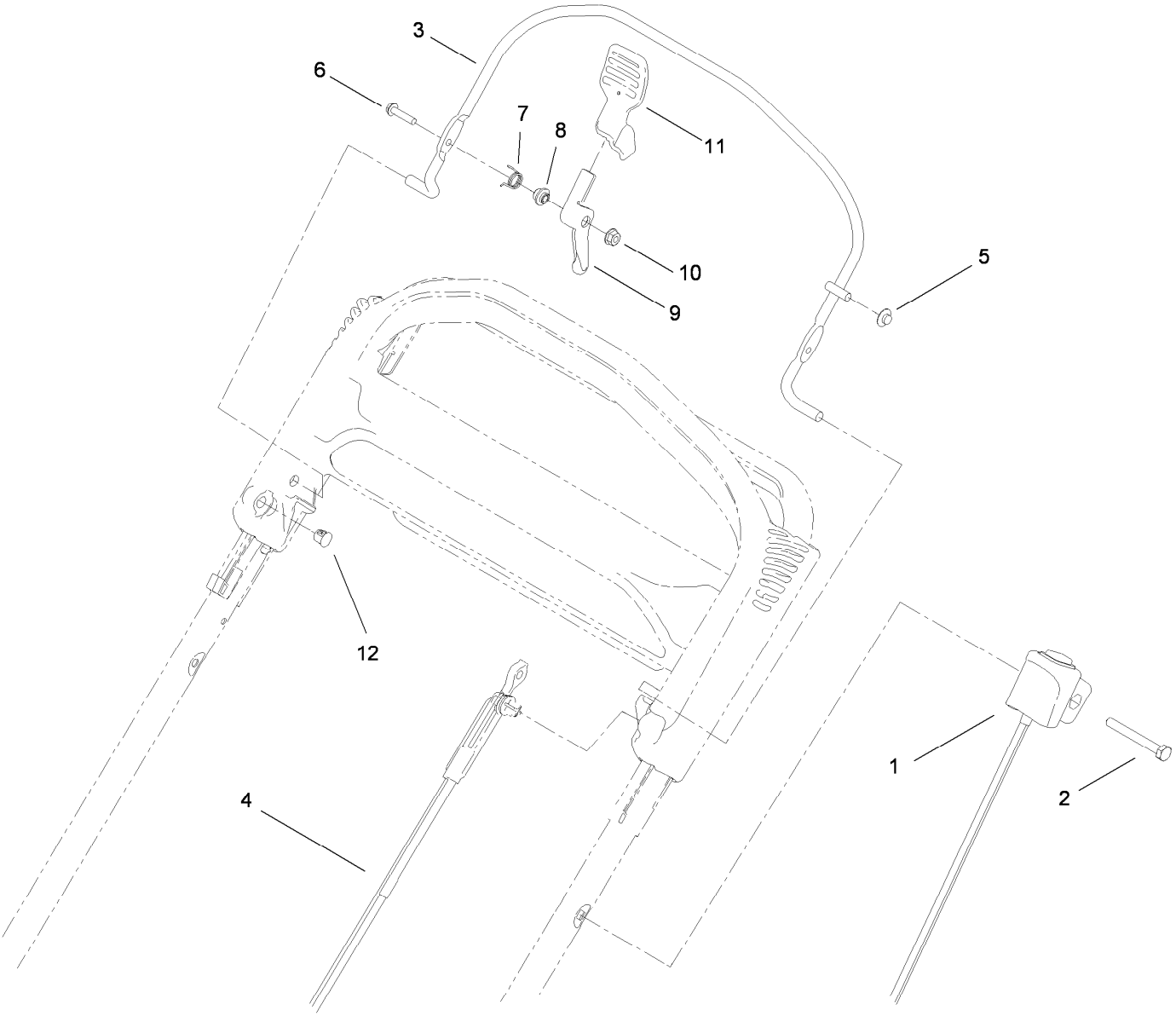

Handle Component Assembly

Ref.	*Part Number*	*Qty.*	*Description*
1	117-5975	1	Switch Housing ASM
2	321-50	1	Screw-HH
3	108-3788-03	1	Bail-Brake
4	115-8439	1	Cable-Brake, BBC
5	3290-337	1	Nut-Speed
6	106-9169	1	Screw
7	107-7462	1	Spring-Torsion
8	107-7463	1	Spacer
9	106-6802	1	Lever
10	32128-17	1	Nut-Lock, Flange
11	112-8884	1	Knob-BBC
12	104-9368	1	Plug-Dome

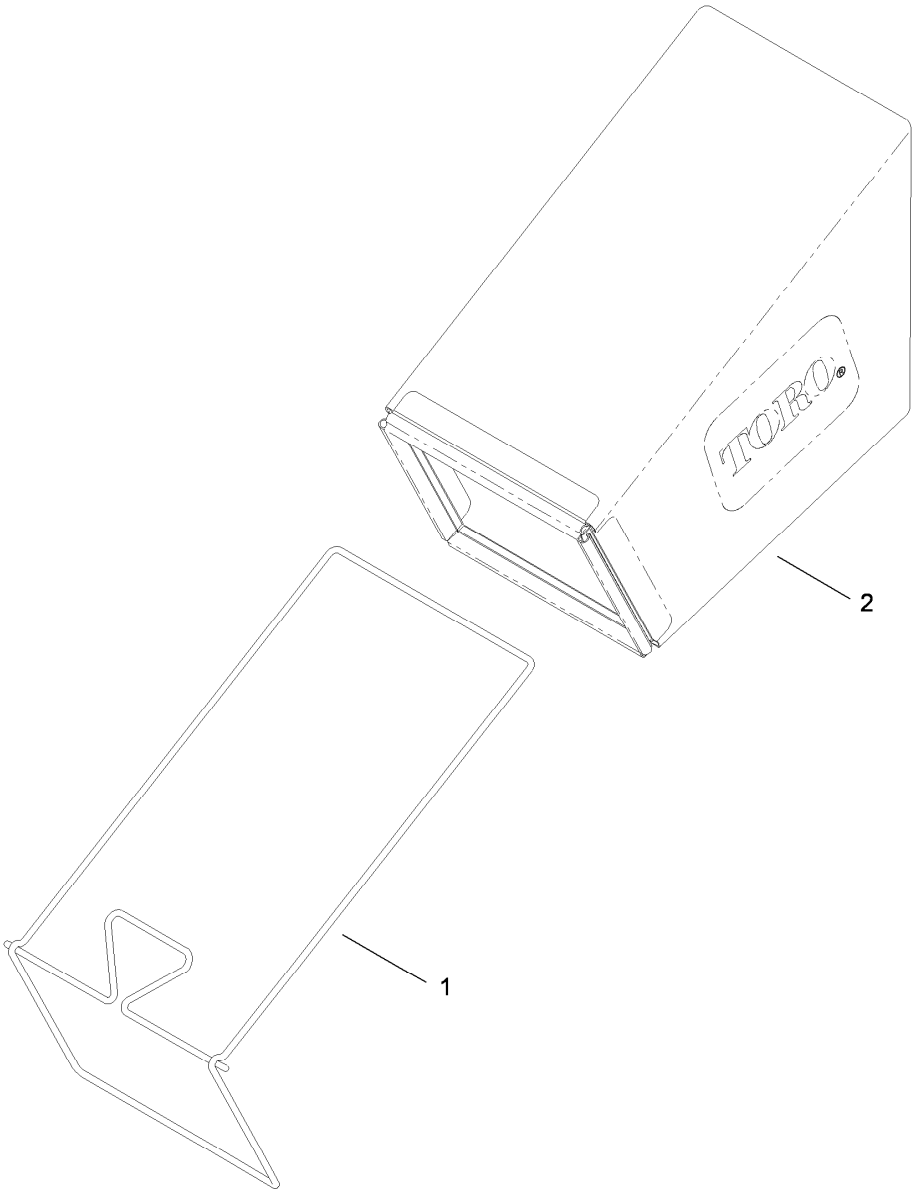

Rear Bag Assembly

Ref.	*Part Number*	*Qty.*	*Description*
1	114-2679-03	1	Frame-Bag
2	115-4673	1	Grass Bag ASM

Attachments and Accessories

For 20958 55cm Recycler Lawn Mower

Product Name	Model/Part
Traction Assist Handle Kit	108-8120
22 inch Blade Kit	59534



Count on it.