Form No. 3368-782 Rev A

Belt Guard Kit

TimeCutter® ZS 4200 Riding Mower

Model No. 120-7780

Installation Instructions

Do not supply these instructions to the customer.

These instructions are for a dealer to install additional belt guards on units sold in France.

Safety

Safety and Instructional Decals

Safety decals and instructions are easily visible to the operator and are located near any area of potential danger. Replace any decal that is damaged or lost.



120-1119

1. Fire hazard—read the *Operator's Manual*.

Installation

1

Preparing for Installation

No Parts Required

Procedure

Important: Refer to the *Operator's Manual* if you are unfamiliar with the specifics of operating this machine before proceeding. The manual contains important information about safely operating the machine. If you do not know this information, you could seriously injure yourself or others.

1. Park the machine on a level, smooth surface with sufficient space to access both sides of the mowing deck.

⚠ WARNING

Before working on the machine, stop the engine, set the parking brake, remove the ignition key, and disconnect the spark plug wire.

⚠ CAUTION

If you leave the key in the ignition switch, someone could accidently start the engine and seriously injure you or other bystanders.

Remove the key from the ignition and disconnect the wire from the spark plug before you do any maintenance. Set the wire aside so that it does not accidentally contact the spark plug.

2. Check the loose parts bag and verify that it contains all the parts listed in this document.
3. Remove the mowing deck and slide it out from under the traction unit; refer to the *Operator's Manual* for this machine.

© 2011—The Toro® Company
8111 Lyndale Avenue South
Bloomington, MN 55420

Register at www.Toro.com.

CE

Original Instructions (EN)
All Rights Reserved

2

Assembling the Deck Belt Guard

Parts needed for this procedure:

1	Left deck guard plate
1	Right deck guard plate
1	Deck guard cover
6	Hex Bolt (M6-1X16)
6	Locknut (NIM6-1)

Procedure

Assemble the left and right deck guard plates and the and deck guard cover as shown in Figure 1.

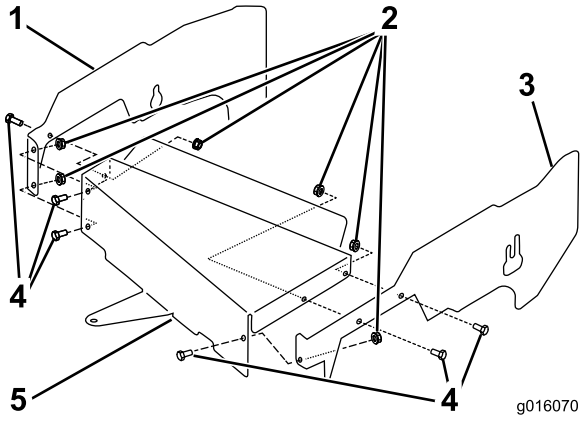

Figure 1

1. Right deck guard plate
2. Locknut (NIM6-1) (6)
3. Left deck guard plate
4. Hex Bolt (M6-1X16) (6)
5. Deck guard cover

3

Installing the Deck Belt Guard

No Parts Required

Procedure

1. Loosen, **but do not remove**, the flange nut on the outside of each suspension bracket on the rear of the deck; see Figure 2.

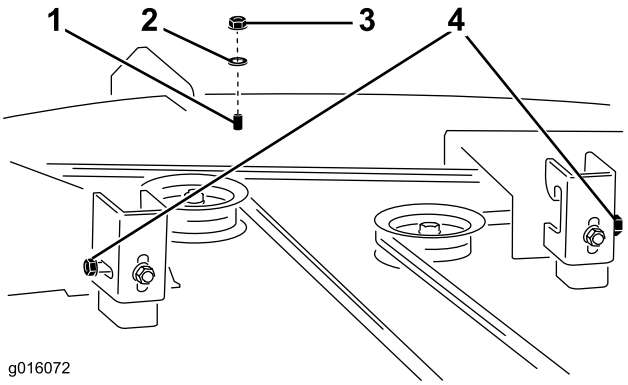

Figure 2

1. Bolt, existing
2. Washer, existing
3. Nut, existing
4. Flange nut, existing (2)

2. Remove the existing bolt, washer and nut shown in Figure 2 and set them aside.
3. Mount the assembled deck belt guard onto the deck.
   A. Attach the tab at the front of the guard to the deck using the existing bolt, washer and nut that you just set aside; see Figure 3.

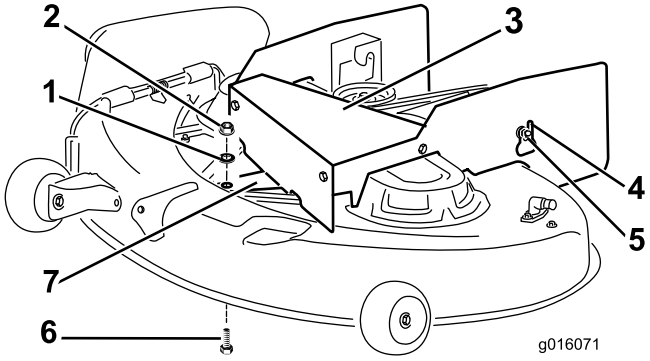

Figure 3

1. Washer, existing
2. Nut, existing
3. Deck belt guard
4. Rear slots, pair
5. Flange nut, existing (2)
6. Bolt, existing
7. Tab

   B. For each side of the assembled guard, insert the previously loosened flange nut through the large opening near the rear of the guard (Figure 3).

      Note: Use the slot in each side guard that best aligns the hole in the tab with the hole in the deck.

   C. Insert the previously removed bolt up through the holes in both the deck and the tab and securely fasten the washer and nut to it.

   D. Tighten both flange nuts securely.
4. Verify that the guard is clear of all moving parts **across their full range of operation**, that it will not cause damage to wires, hoses or other components

and that it will not interfere with the safe operation of the cutting deck.

4

Attaching the Deck

No Parts Required

Procedure

1. Slide the deck back under the machine, mount it to the traction unit and adjust it as described in the *Operator's Manual* for this machine.
2. Verify that the belt guards are clear of all moving parts **across their full range of operation**, that they will not cause damage to wires, hoses or other components and that they will not interfere with the safe operation of the mowing deck and the traction unit.



Count on it.