Form No. 3367-873 Rev B

TORO®

Count on it.

Parts Catalog

Workman® MD Utility Vehicle

Model No. 07266TC—Serial No. 311000001 and Up

Ordering Replacement Parts

To order replacement parts, please supply the part number, the quantity, and the description of each part desired.

Understanding Reference Numbers

Each identified part in an illustration has a reference number. The reference number for a part also appears in the parts list, along with other information about the part.

This catalog uses two special reference number formats, one to indicate parts in a service assembly and another to indicate the quantity of a given part in an illustration.

Service Assembly Reference Numbers

Parts in service assemblies have reference numbers in the form a:b. The a represents the reference number of the entire service assembly and the b represents a sequential number unique to each part within the service assembly.

For example, a wheel assembly might be identified by reference number 6, the tire by 6:1, the valve by 6:2, and the wheel by 6:3. When you order the assembly identified by reference number 6, you receive all parts identified by reference numbers 6:1,6:2, and 6:3. However, you may also order any part individually. Reference numbers of this type appear in illustration and in parts lists.

Reference Numbers Indicating Quantity

In an illustration, if a reference number indicates more than one part, the reference number has the form nX y. The n represents the quantity of the part, the X is the multiplication symbol, and the y represents the reference number.

For example, in an illustration, the reference number 2X 37 means that two of the parts identified by reference number 37 are indicated.

List of Abbreviations

AR: as required

ASM: assembly

BBC: blade brake control

BHTF: button head thread forming

CARR: carriage

CCW: counter clockwise

CW: clockwise

DEG: degrees

DPA: Dual Point Adjustment

ECM: electronic control module

EXT: external

FH: flat head

GA: gauge

HD: heavy-duty

HF: hex flange

HH: hex head

HHF: hex head flange

HHFTF: hex head flange thread forming

HJ: hex jam

HLH: hex lag head

HOC: height-of-cut

HSBH: hex socket button head

HSFH: hex socket flat head

HSH: hex socket head

HWH: hex washer head

HWHTF: hex washer head thread forming

HYD: hydraulic

LH: left hand

LP: Liquid Propane

NI: nylon insert

NPTF: national pipe thread fine

PFH: phillips flat head

PPH: phillips pan head

PPHTF: phillips pan head thread forming

PRH: phillips round head

PTH: phillips truss head

PTO: power-take-off

RH: right hand

ROPS: roll-over protection system

RRB: rear roller brush

SFH: slotted fillister head

SHH: slotted hex head

SHWH: slotted hex washer head

SPH: slotted pan head

SQH: square head

SRH: slotted round head

STD: standard

TAP: self tapping

TTH: torx truss head

© 2011—The Toro® Company
8111 Lyndale Avenue South
Bloomington, MN 55420

Contact us at www.Toro.com.
Printed in the USA.
All Rights Reserved

Contents

Dash Assembly 4
Pedal Box Assembly 6
Shifter Assembly 7
Front Frame Assembly 8
Seat Base Assembly 9
Front Tire, Spindle and Tie Rod Assembly 10
Rear Tire and Transaxle Assembly 12
Secondary Clutch Assembly No. 119-0803 13
Transaxle Assembly No. 115-2300 14
LH Rear Brake Assembly No. 114-8332 16
RH Rear Brake Assembly No. 114-8331 17
Upper Steering Assembly 18
Steering Box Assembly No. 112-3130 19
Box and Tailgate Installation Assembly 20
Cargo Bed Service Assembly No. 119-9710 21
Hood and Fender Assembly 22
Frame Assembly 23
Engine and Clutch Assembly 24
Primary Clutch Assembly No. 119-0802 26
Starter Generator Assembly No. 119-9545 27
Air Cleaner Assembly No. 99-7120 28
Master Cylinder and Brake Line Assembly 29
Master Cylinder Assembly No. 104-6782 30
Cylinder Head Assembly 31
Crankshaft and Piston Assembly 32
Camshaft and Valve Assembly 33
Starter Air Shroud Assembly 34
Intake Assembly 35
Carburetor Assembly 36
Crankcase Assembly 37
Fuel Pump Assembly 38
Magneto Assembly 39
Engine Gaskets and Fittings 40
Attachments and Accessories 41

Dash Assembly

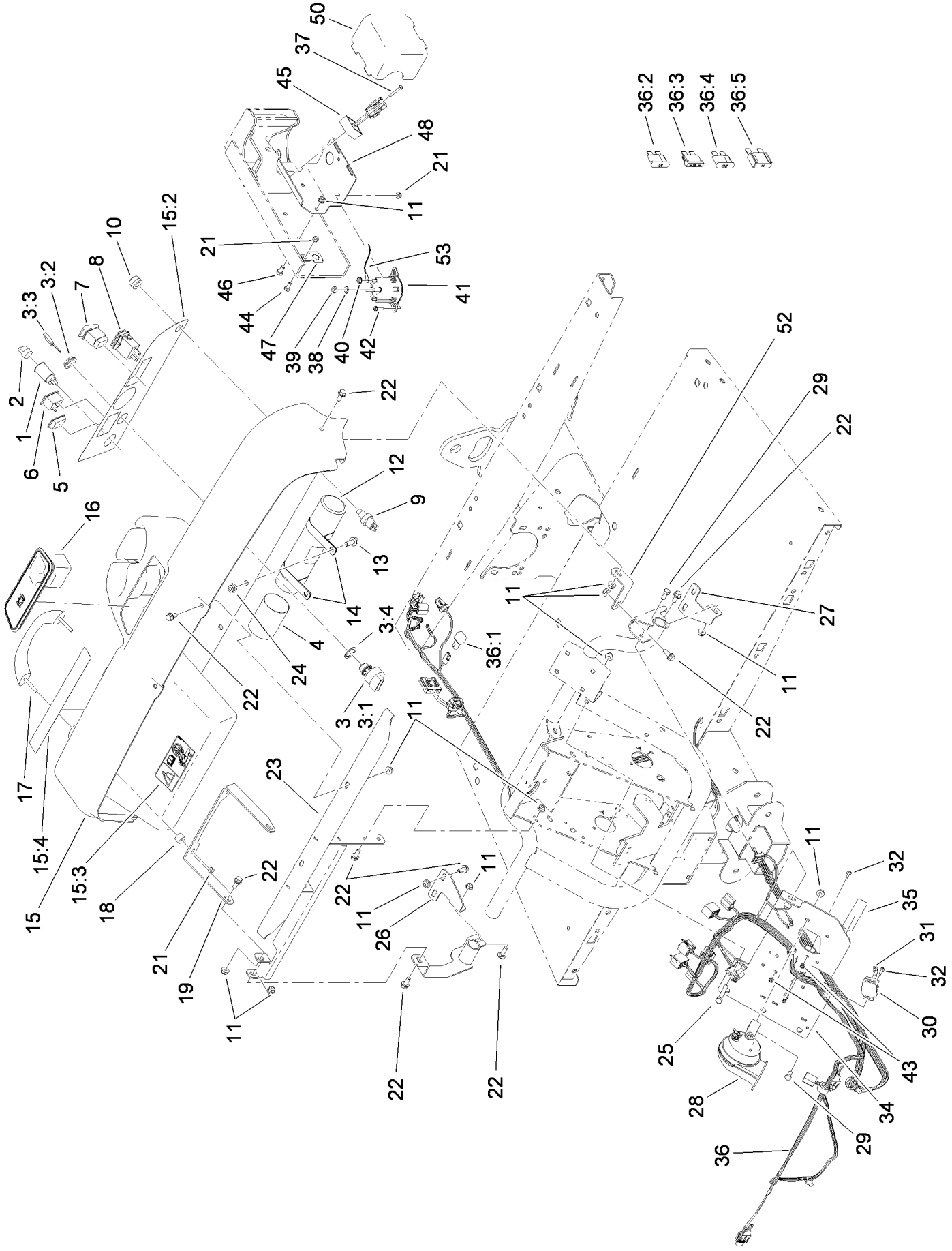

Dash Assembly (continued)

Ref.	Part Number	Qty.	Description
1	99-7411	1	Point-Power
2	99-7416	1	Cap
3	112-3323	1	Ignition Switch ASM
3:1		1	Switch-Ignition ●
3:2	108-8660	1	Nut-Mounting
3:3	99-7418	1	Key-Ignition
3:4	108-8659	1	Washer-Backup
4	104-7048	1	Cap-Housing
5	99-7420	1	Plug-Hole
6	99-7410	1	Indicator-Light, Low-Oil Pressure
7	95-8999	1	Switch
8	94-4208	1	Hourmeter
9	112-3324	1	Switch-Horn
10	112-3313	1	Cap And Nut ASM
11	104-8300	21	Nut-Flange, NI
12	104-7050	1	Tube-Manual
13	3234-11	2	Screw-HHF
14	2412-133	2	R-Clamp
15	114-8310	1	Dash ASM
15:2	117-5001	1	Decal-Panel, Control
15:3	104-6581	1	Decal-Danger
15:4	115-2412	1	Decal-No Storage
16	104-6930	1	Plug-Rubber
17	112-3320	1	Handle-Grip
18	114-8301	2	Spacer
19	112-3391-03	1	Bracket-Grip, Handle
21	104-7201	5	Nut-HF
22	110-5053	15	Screw-Flange
23	115-7651-03	1	Dash Support ASM
24	104-8301	2	Nut-Flange, NI
25	322-11	2	Screw-HH
26	114-8304	1	Bracket-Dash Mount, RH
27	114-8312	1	Bracket-Dash Mount, LH
28	110-2594	1	Horn ASM
29	322-3	2	Screw-HH
30	42862	1	Block-Terminal, Ground
31	42863	1	Strip-Jumper
32	32105-13	4	Screw-HWH
34	112-3376-03	1	Plate-Mount, Electrical
35	112-3325	1	Decal-Block, Fuse
36	119-5774	1	Harness-Wire
36:1	100-4918	1	Diode
36:2	218-578	1	Fuse-Blade, 10 Amp
36:3	109355	1	Fuse-Blade, 15 Amp
36:4	109101	1	Fuse-Blade, 20 Amp
36:5	114-3342	1	Fuse-Maxi, 60 Amp
37	100-4352	1	Screw-HWH
38	3255-8	2	Washer-Lock
39	3220-2	2	Nut-Jam
40	32149-8	2	Nut-Keps
41	114-3315	1	Solenoid-12 Vdc
42	3234-33	2	Screw-HHF
43	3296-2	4	Nut-Lock, NI
44	321-3	1	Screw-HH
45	119-9492	1	Regulator-Voltage
46	322-2	2	Screw-HH
47	114-5502	1	Clip-Fuse
48	119-0752-03	1	Mount-Component
50	112-3027	1	Cover-Controller
52	114-8305	1	Angle-Mount, Dash (LH)
53	112-3537	1	Cable-Battery, Positive

● Not serviced separately

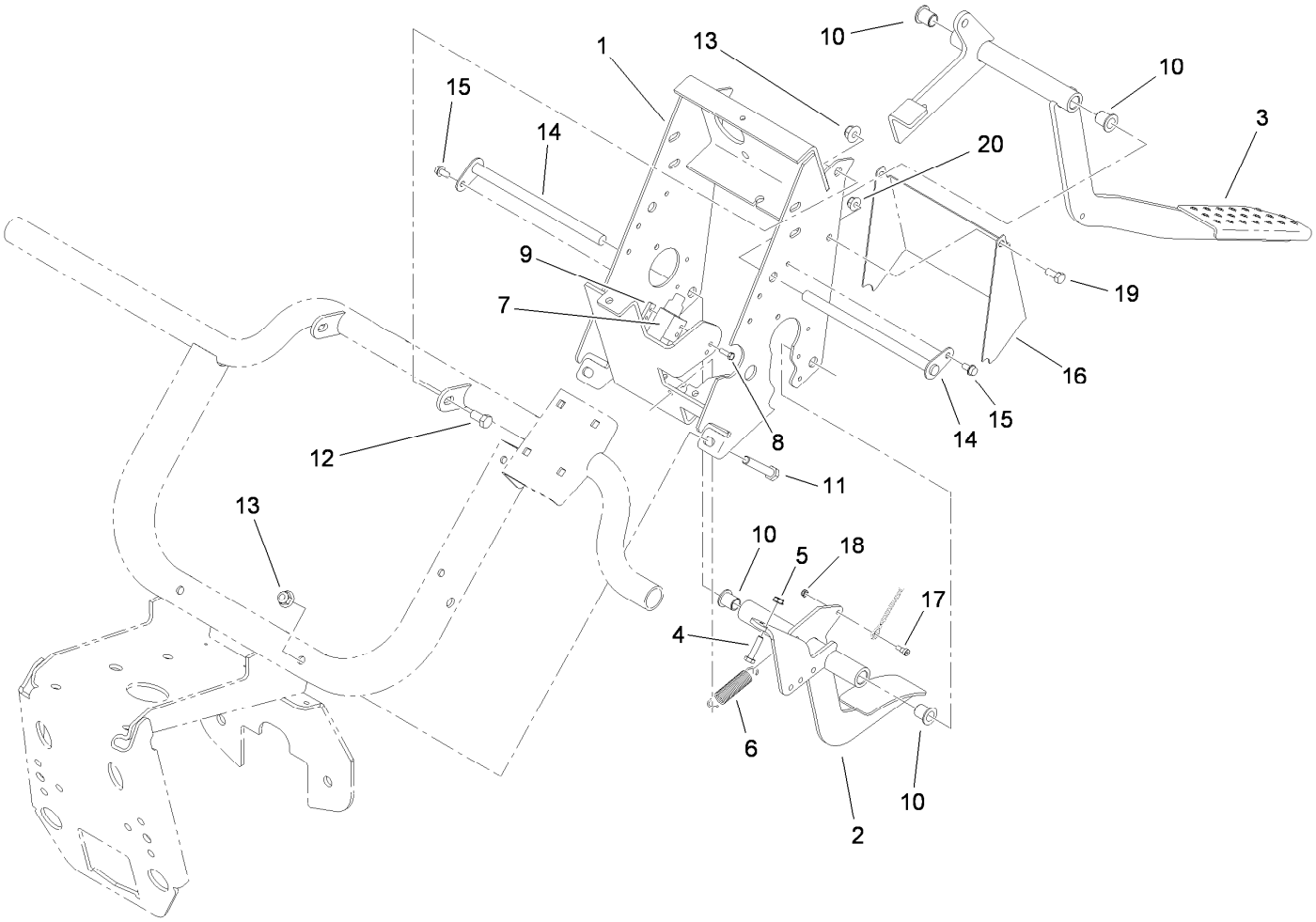

Pedal Box Assembly

Ref.	Part Number	Qty.	Description
1	119-0748-03	1	Pedal Support Frame ASM
2	115-7630-03	1	Throttle Pedal ASM
3	112-3314-03	1	Brake Pedal ASM
4	321-7	2	Screw-HH
5	32149-2	2	Nut-Keps
6	104-6415	1	Spring-Return, Pedal
7	99-7407	1	Switch
8	3290-134	2	Screw
9	1-633181	1	Plate-Tapped
10	256-155	4	Bushing-Flange

Ref.	Part Number	Qty.	Description
11	323-11	2	Screw-HH
12	323-4	2	Screw-HH
13	104-8301	4	Nut-Flange, NI
14	104-7164	2	Pivot-Pedal
15	32144-4	2	Screw-HWH
16	115-7619-03	1	Cover
17	115-7632	1	Bolt-Shoulder
18	3296-47	1	Nut-Lock, NI
19	322-3	2	Screw-HH
20	104-8300	2	Nut-Flange, NI

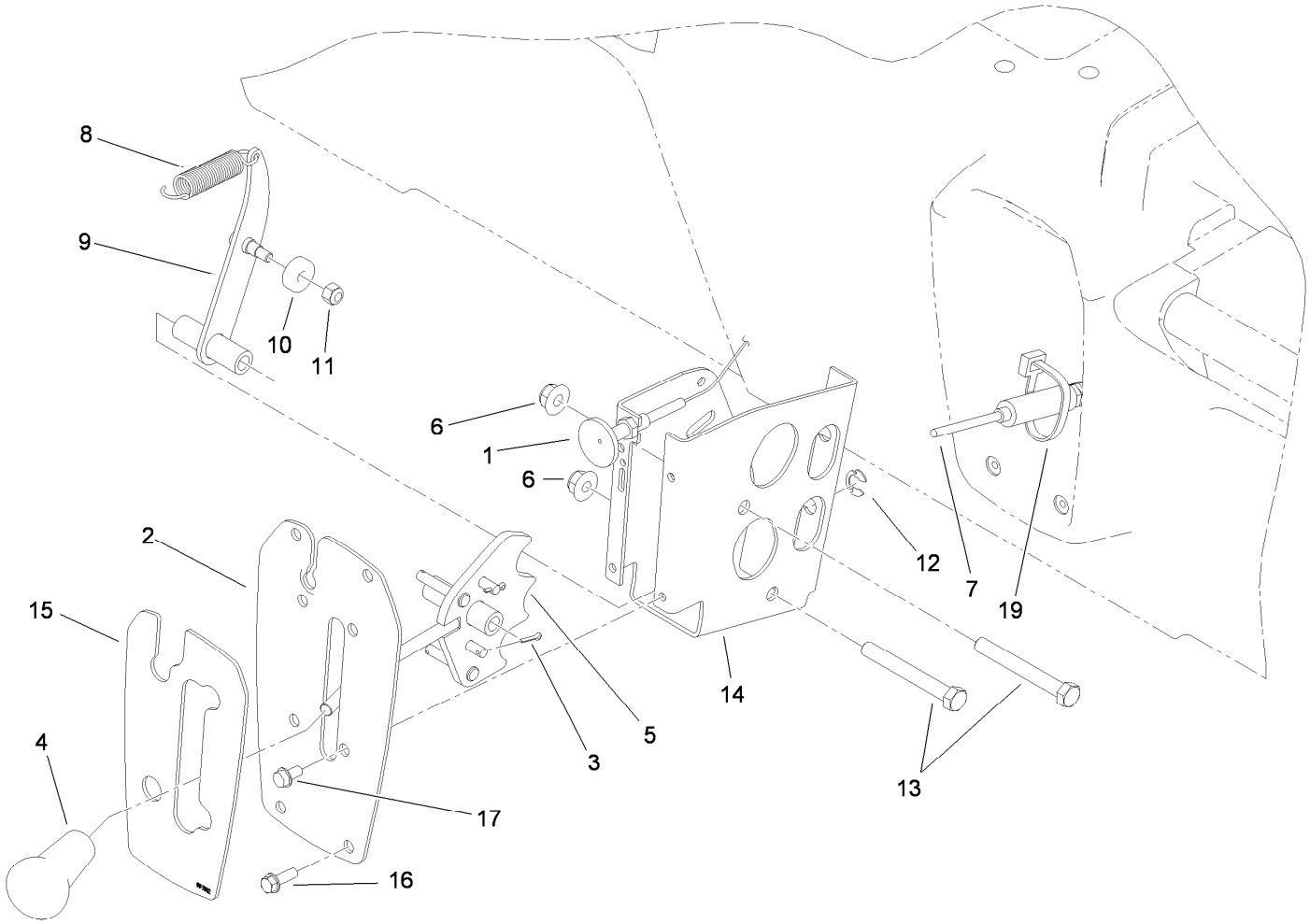

Shifter Assembly

Ref.	Part Number	Qty.	Description
1	104-6507	1	Cable-Choke
2	99-7887-03	1	Plate-Shifter
3	3272-5	2	Pin-Cotter
4	99-7981	1	Knob-Grip, Soft
5	114-2719	1	Plate-Detent
6	104-8301	2	Nut-Flange, NI
7	115-7679	2	Tension Cable Control ASM
8	104-6415	1	Spring-Return, Pedal
9	108-3138	1	Arm-Detent
10	251-307	1	Bearing-Ball
11	3296-42	1	Nut-Lock, NI
12	32151-101	2	E-Ring
13	323-14	2	Screw-HH
14	108-3141-03	1	Bracket-Shift
15	99-7952	1	Decal-Shifter
16	32105-15	4	Screw
17	32144-4	4	Screw-HWH
19	3290-378	1	Tie-Cable

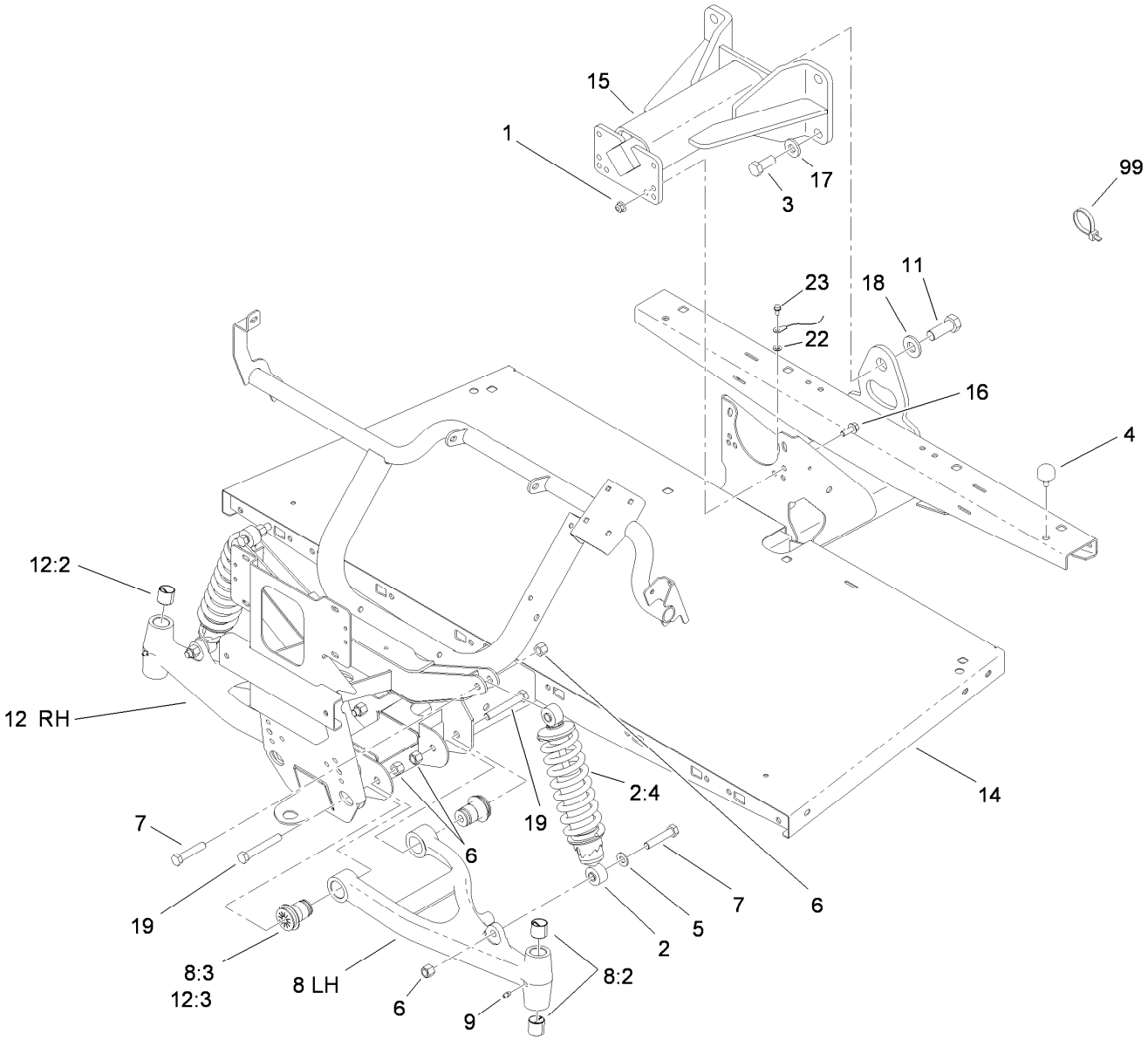

Front Frame Assembly

Ref.	Part Number	Qty.	Description
1	104-8301	4	Nut-Flange, NI
2	112-2975	2	Shock/Spring ASM
2:4	112-3383	1	Spring
3	327-4	4	Screw-HH
4	87-2440	1	Bumper-Rubber
5	51-3500	2	Washer
6	3296-23	8	Nut-Lock, NI
7	325-10	4	Screw-HH
8	114-8313	1	LH A-Arm ASM
8:2	3-0348	2	Bushing
8:3	87-1450	2	Bushing-Flange
9	302-5	2	Fitting-Grease
11	328-24	1	Screw-HH

Ref.	Part Number	Qty.	Description
12	114-8314	1	RH A-Arm ASM
12:2	3-0348	2	Bushing
12:3	87-1450	2	Bushing-Flange
14	112-3340-03	1	Front Frame ASM
15	99-7700	1	Pivot Yoke ASM
16	3234-11	4	Screw-HHF
17	99-7667	4	Washer-Flat
18	87-3060	1	Washer-Hardened
19	325-14	4	Screw-HH
22	3254-16	1	Washer-Lock/Int
23	32144-4	1	Screw-HWH
99	3290-379	12	Tie-Cable

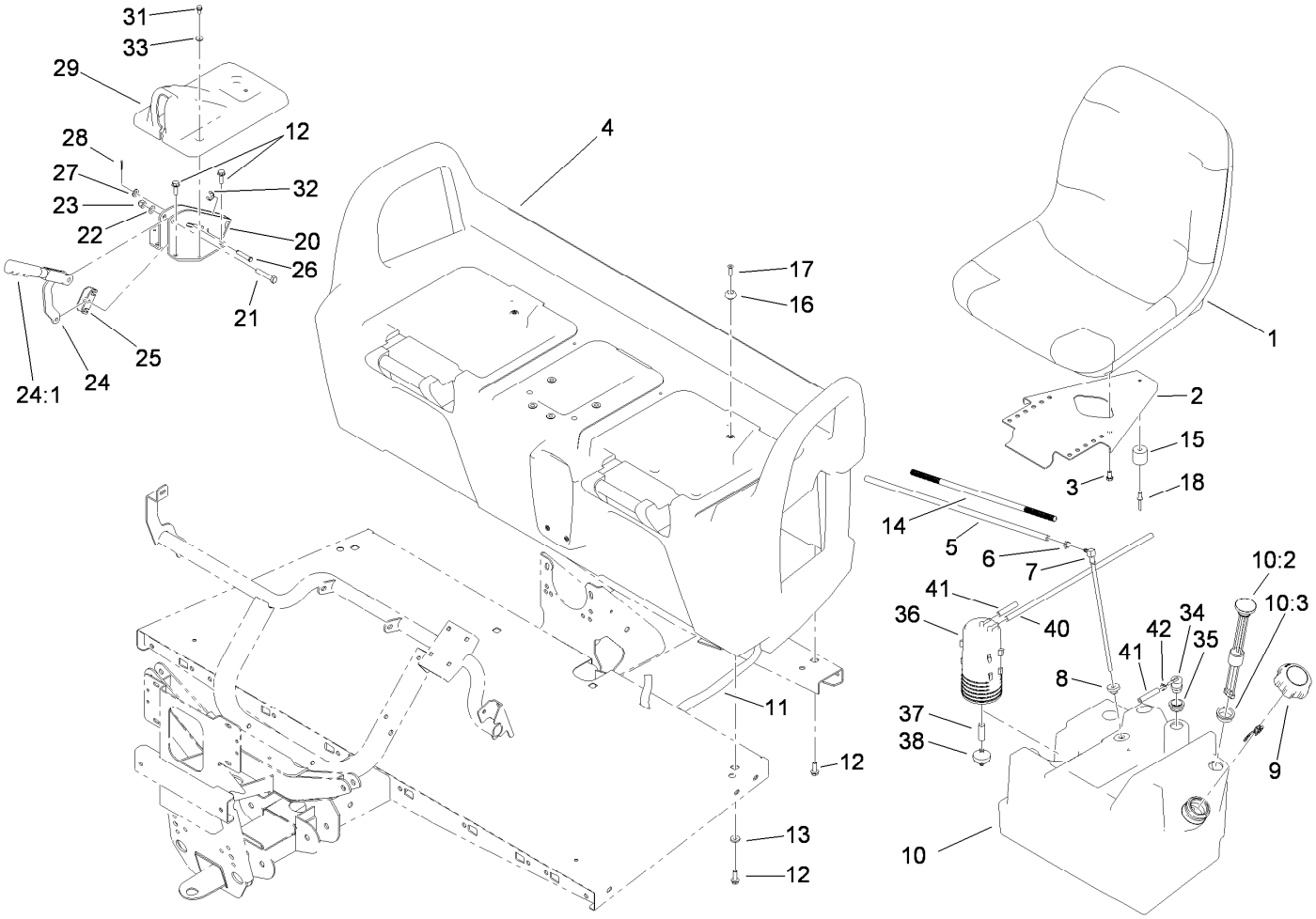

Seat Base Assembly

Ref.	Part Number	Qty.	Description
1	112-2923	2	Seat ASM
2	99-7829	2	Bracket-Seat
3	33114-016	8	Screw-HH
4	104-6847	1	Seat Base ASM
5	110-4103	1	Hose-Fuel
6	2412-98	1	Clamp
7	99-7264	1	Pipe-Stand
8	46-6560	1	Bushing
9	115-7788	1	Cap-Fuel
10	119-0784	1	Fuel Tank ASM
10:2	99-7262	1	Gauge-Fuel
10:3	95-8972	1	Grommet
11	3339-175	1	Strapping-Web, 48 Inch
12	3234-17	12	Screw-HHF
13	88-7200	8	Washer-Flat
14	112-3337	1	Conduit-Line, Fuel
15	99-7830	2	Rubber Receptical ASM
16	99-7833	2	Post-Holding
17	32108-5	2	Screw-FH
18	3290-412	2	Rivet
20	104-6844-03	1	Support-Brake, Park

Ref.	Part Number	Qty.	Description
21	323-10	1	Screw-HH
22	3290-477	1	Washer-Curved
23	3296-39	1	Nut-Lock, NI
24	104-6842	1	Lever-Brake, Park
24:1	106-7972	1	Grip-Handle
25	87-3480	1	Bracket-Equalizer, Cable
26	94-3829	1	Pin-Clevis
27	3256-23	1	Washer-Flat
28	3272-6	1	Pin-Cotter
29	104-7014	1	Cover-Brake, Parking
31	32144-4	2	Screw-HWH
32	32120-47	2	Ring-Retaining, External
33	3256-1	2	Washer-Flat
34	114-0285	1	Valve-Rollover
35	114-0284	1	Grommet
36	117-1221	1	Canister-Carbon, 800Cc
37	106-5317	1	Hose-Fuel
38	115-7854	1	Filter-Fuel, Inline
40	109-0273	1	Hose-Fuel
41	110-8751	1	Hose-Fuel
42	2412-146	1	Clamp-Hose

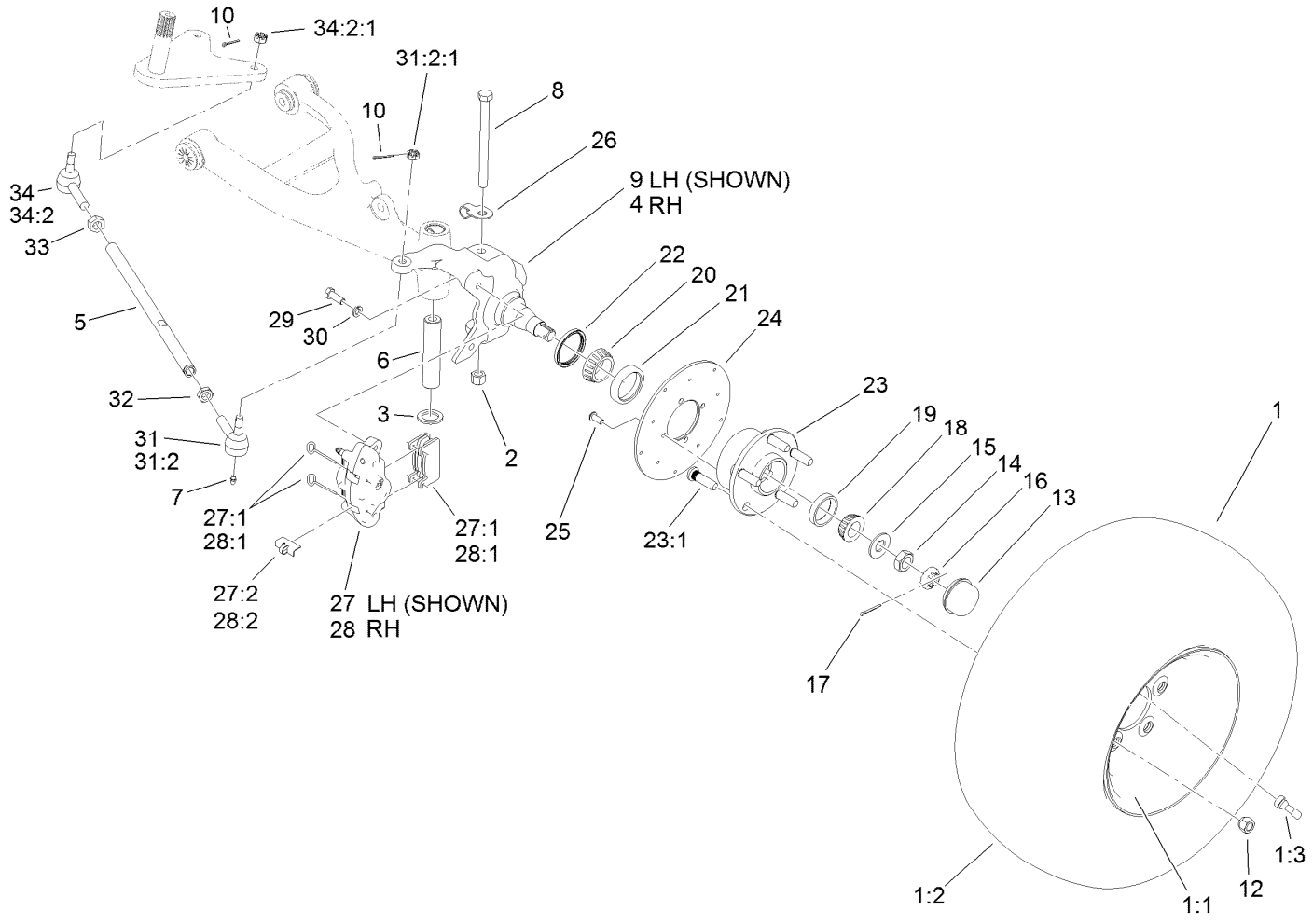

Front Tire, Spindle and Tie Rod Assembly

Ref.	Part Number	Qty.	Description
1	104-7290	2	Tire And Wheel ASM
1:1	104-7288	1	Wheel
1:2	104-7289	1	Tire
1:3	232-27	1	Stem-Valve
2	3296-23	2	Nut-Lock, NI
3	256-115	2	Washer-Thrust
4	112-3167	1	Spindle-RH
5	115-7654	2	Tie Rod
6	99-7499	2	Sleeve-Kingpin
7	302-5	4	Fitting-Grease
8	325-20	2	Screw-HH
9	112-3166	1	Spindle-LH
10	3272-7	4	Pin-Cotter
12	242-50	10	Nut-Lug
13	241-119	2	Cap-Dust
14	3220-7	2	Nut-Jam
15	93-0309	2	Washer-Tab
16	93-0307	2	Nut-Lock, Retainer
17	3272-12	2	Pin-Cotter

Ref.	Part Number	Qty.	Description
18	254-94	2	Bearing-Cone, Tapered
19	254-72	2	Bearing-Cup, Tapered
20	254-106	2	Cone-Bearing, Tapered
21	254-107	2	Cup-Bearing, Tapered
22	108-7019	2	Seal-Shaft
23	117-8071	2	Hub ASM
23:1	10-6830	5	Stud-Type, Drive
24	104-6891	2	Rotor
25	3274-55	8	Screw-HSBH
26	112-3311	2	Clip-Hose
27	112-3150	1	Caliper-LH
27:1	107-0708	1	Friction Pad And Pin Kit
27:2	112-3152	1	Spring-Rattle, Anti
28	112-3151	1	Caliper-RH
28:1	107-0708	1	Friction Pad And Pin Kit
28:2	112-3152	1	Spring-Rattle, Anti
29	323-6	4	Screw-HH
30	3253-21	4	Washer-Lock
31	112771-03	2	LH Ball Joint ASM

● Not serviced separately

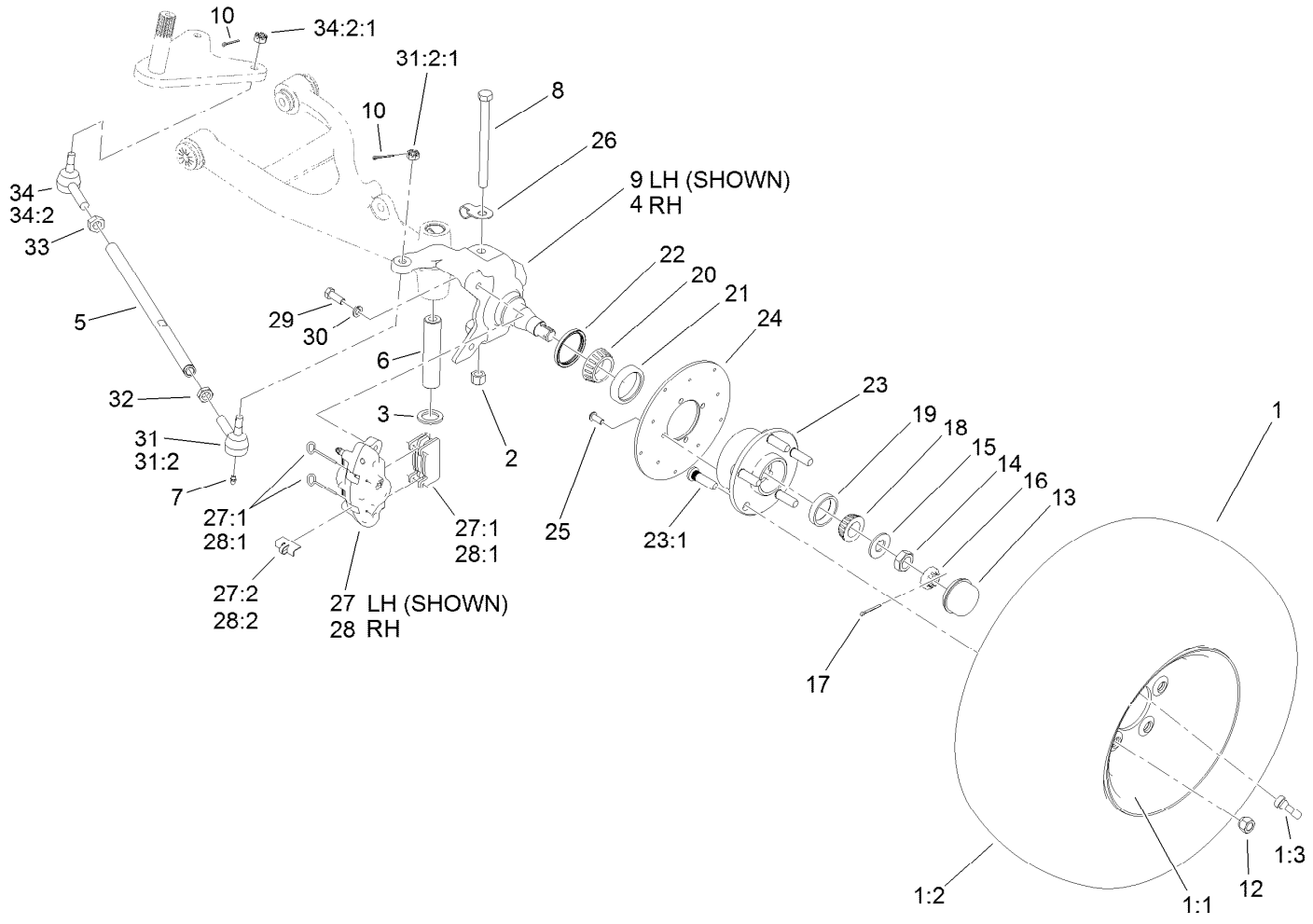

Front Tire, Spindle and Tie Rod Assembly (continued)

Ref.	Part Number	Qty.	Description
31:2		1	Joint-Ball, LH ●
31:2:1	915031	1	Nut
32	3218-21	2	Nut-Jam
33	3220-11	2	Nut-Jam

Ref.	Part Number	Qty.	Description
34	112772-03	2	RH Ball Joint ASM
34:2		1	Joint-Ball, RH ●
34:2:1	915031	1	Nut

● Not serviced separately

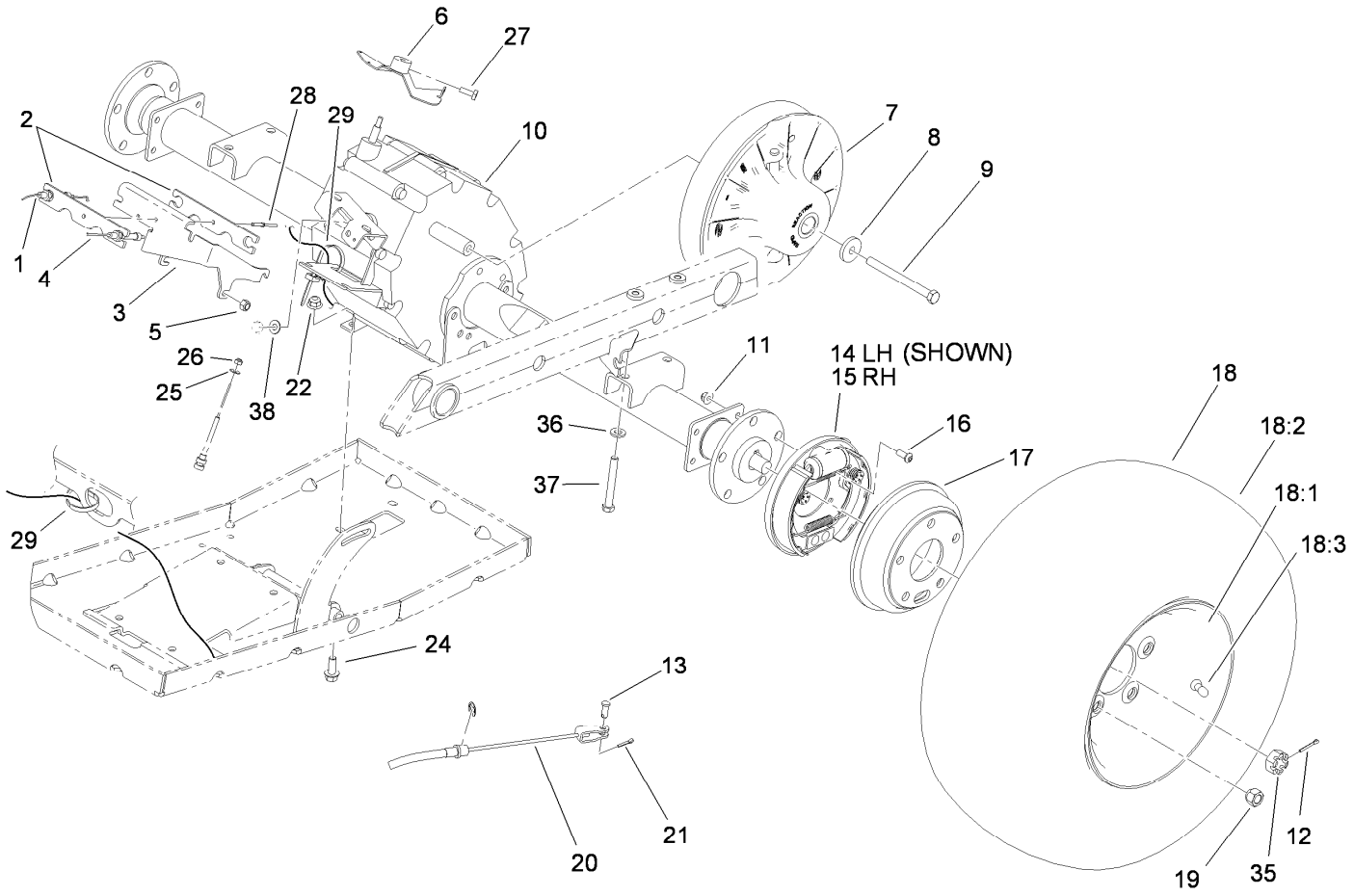

Rear Tire and Transaxle Assembly

Ref.	Part Number	Qty.	Description
1	104-6474	1	Cable-Governor
2	99-7121	2	Bracket-Tamper
3	99-7054	1	Bracket-Cables
4	115-7613	1	Cable-Accelerator
5	33024-00	3	Nut-Lock
6	104-6569	1	Bracket-Governor
7	119-0803	1	Clutch-Secondary
8	104-6563	1	Washer-Stepped
9	119-0723	1	Screw-HH, Lock
10	115-2300	1	Transaxle
11	104-8300	8	Nut-Flange, NI
12	3272-12	2	Pin-Cotter
13	283-62	2	Pin-Clevis
14	114-8332	1	LH Brake ASM
15	114-8331	1	RH Brake ASM
16	3274-55	8	Screw-HSBH
17	104-6500	2	Drum-Brake
18		2	Tire And Wheel ASM ●

Ref.	Part Number	Qty.	Description
18:1	104-7288	1	Wheel
18:2	104-7289	1	Tire
18:3	232-27	1	Stem-Valve
19	242-50	10	Nut-Lug
20	112-3309	2	Cable-Brake
21	3272-10	2	Pin-Cotter
22	104-8301	4	Nut-Flange, NI
24	3234-11	4	Screw-HHF
25	3256-49	2	Washer-Flat
26	3296-2	2	Nut-Lock, NI
27	3241-6	2	Screw-SQH
28	99-7122	1	Rivet-Annodized
29	3290-378	2	Tie-Cable
35	104-1656	2	Nut-Castle
36	100-4852	4	Washer-Hardened
37	323-14	4	Screw-HH
38	87-8640	1	Washer-Flat

● Not serviced separately

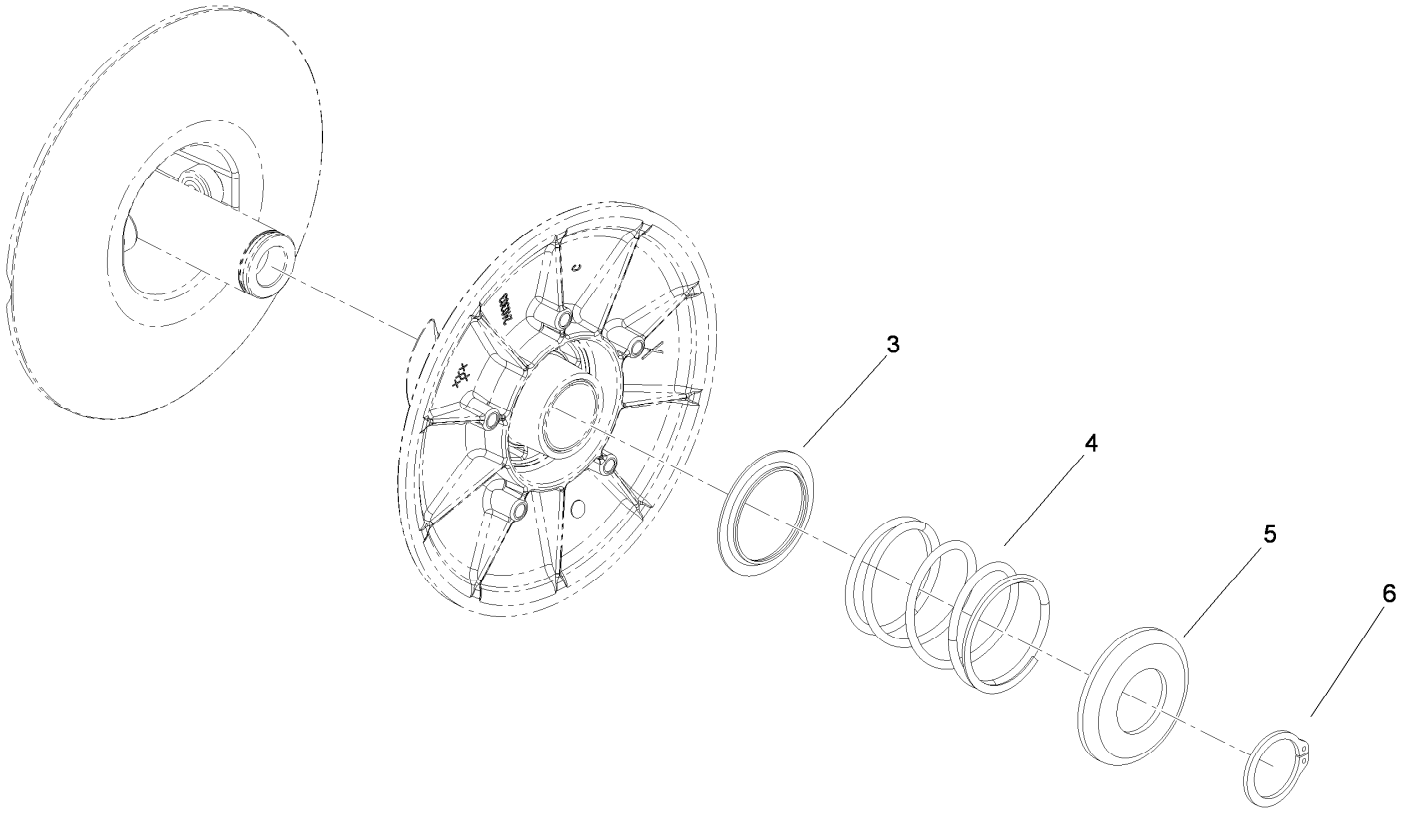

Secondary Clutch Assembly No. 119-0803

Ref.	*Part Number*	*Qty.*	*Description*
3	119-0809	1	Cup-Spring Retainer, Inner
4	119-0808	1	Spring-Secondary (Black/Blue)
5	119-0810	1	Cup-Spring Retainer, Outer
6	119-0811	1	Ring-Retaining

Transaxle Assembly No. 115-2300

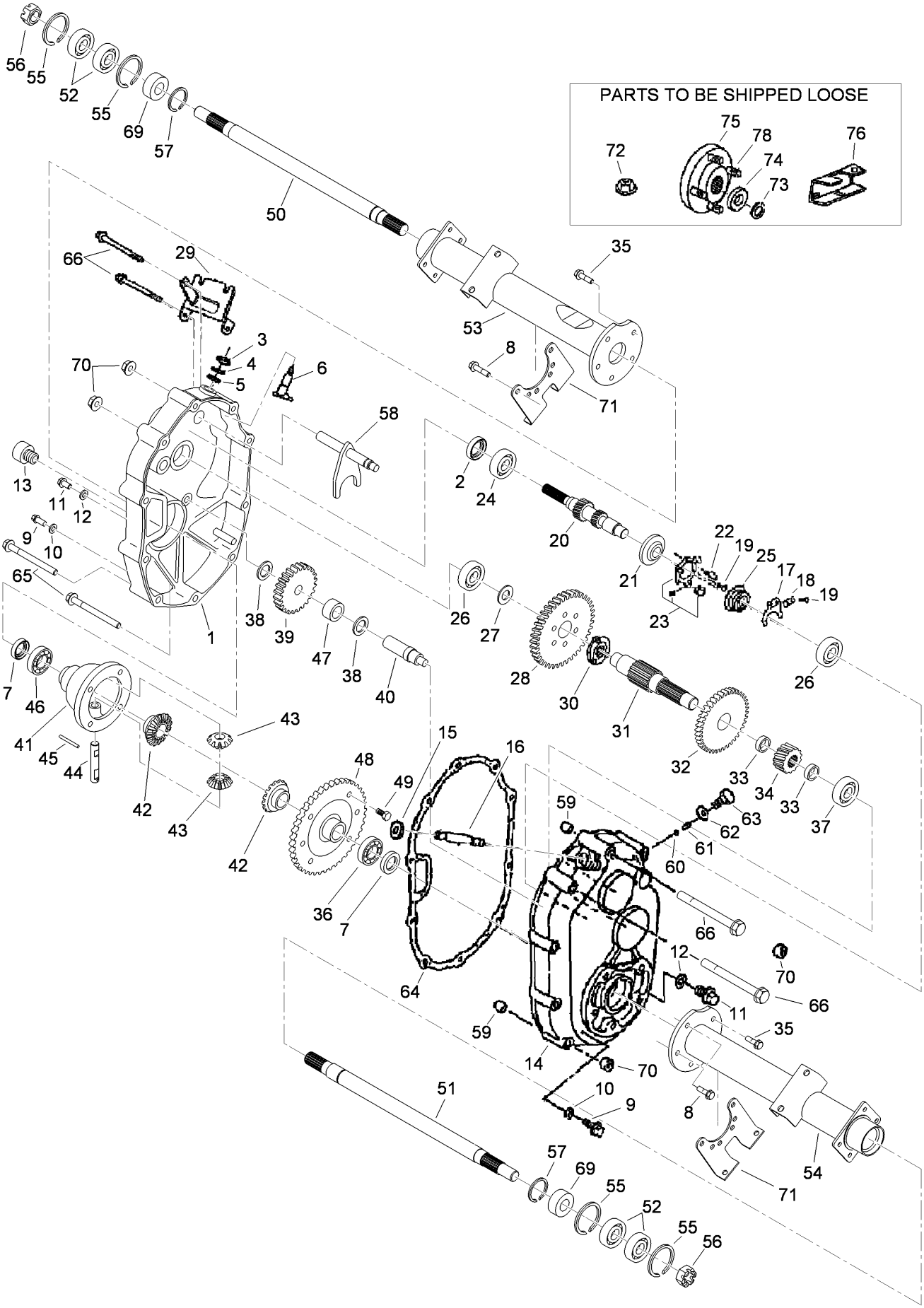

Transaxle Assembly No. 115-2300 (continued)

Ref.	Part Number	Qty.	Description
1	104-1601	1	Case-LH, Complete
2	104-1602	1	Seal-Oil
3	104-1603	1	Seal-Oil
4	104-1604	1	Ring-Snap
5	104-1605	1	Spacer
6	104-1606	1	Shaft-Selector
7	104-1607	2	Seal-Oil
8	104-1608	4	Bolt-Flange
9	104-1609	2	Plug-Check, Oil
10	104-1610	2	Gasket
11	104-1611	2	Plug-Drain, Oil
12	104-1612	2	Gasket
13	104-1613	1	Plug-Filler, Oil
14	104-1614	1	Case-Complete, RH
15	104-1615	1	Seal-Oil
16	104-1616	1	Shaft-Governor
17	104-1617	1	Fork-Governor
18	104-1618	1	Stopper
19	104-1619	4	Screw And Washer ASM
20	104-7002	1	Shaft-Input, Complete
21	104-1621	1	Base-Governor
22	104-1622	1	Pin-Lock
23	104-1623	1	Unit-Plate, Governor
24	104-1624	1	Bearing-Ball
25	104-1625	1	Sleeve-Governor
26	104-1626	2	Bearing-Ball
27	104-1627	1	Spacer
28	104-1628	1	Gear
29	115-7672	1	Bracket-Wire, Change
30	104-1630	1	Clutch-Pin
31	104-1631	1	Shaft-Center
32	104-1632	1	Gear
33	104-1633	2	Collar
34	104-1634	1	Gear
35	104-1635	6	Bolt-Flange
36	104-1636	1	Bearing-Ball
37	104-1637	1	Bearing-Ball
38	104-1638	2	Spacer
39	104-1639	1	Gear
40	104-1640	1	Shaft-Counter
41	104-1641	1	Case-Differential
42	104-1642	2	Gear-Side, Differential
43	104-1643	2	Pinion-Differential
44	104-1644	1	Shaft-Differential
45	104-1645	1	Pin
46	104-1646	1	Bearing-Ball
47	104-1647	1	Bearing-Needle
48	104-1648	1	Gear
49	104-1649	6	Bolt
50	104-1650	1	Shaft-Axle, LH
51	104-1651	1	Shaft-Axle, RH
52	104-1652	4	Bearing-Ball
53	104-1653	1	Case-Axle, LH
54	104-1654	1	Case-Axle, RH
55	104-1655	4	Ring-Snap
56	104-1656	2	Nut-Castle
57	104-1657	2	Ring-Snap
58	104-6870	1	Shaft-Shift, Complete
59	104-1659	2	Knock-Pipe
60	104-1660	1	Ball-Steel
61	104-1661	1	Spring
62	104-1662	1	Gasket
63	104-1663	1	Bolt
64	104-1664	1	Gasket
65	104-1665	6	Bolt-Flange
66	104-1666	4	Bolt-Flange
69	104-6867	2	Collar
70	33004-00	11	Nut-HF
71	104-1671	2	Bracket-Axle
72	104-1672	1	Nut-Lock
73	104-1673	2	Washer-Spring
74	104-1674	2	Washer
75	104-1675	2	Hub
76	112-3287	1	Lever-Select
78	104-8649	10	Stud

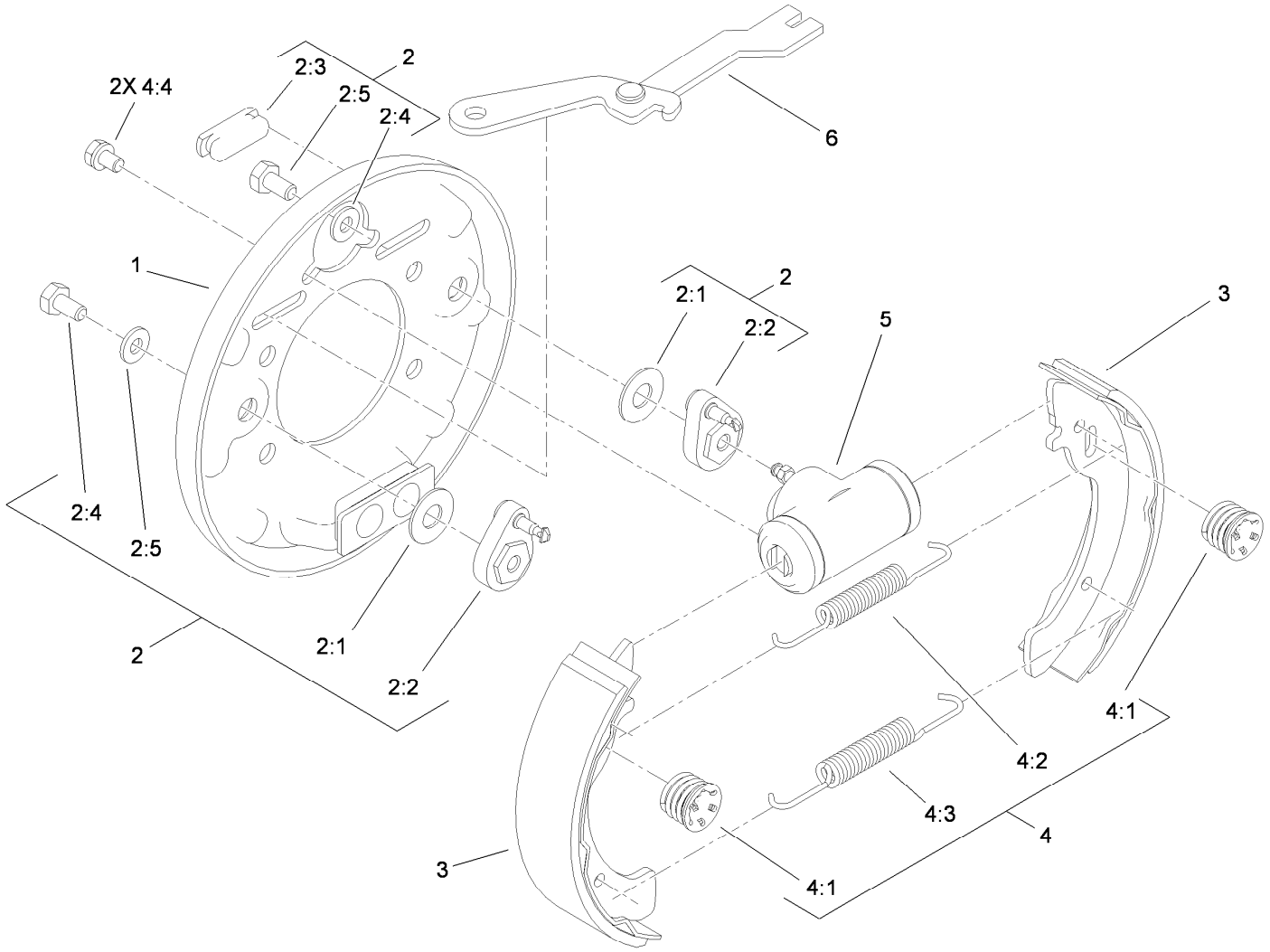

LH Rear Brake Assembly No. 114-8332

Ref.	*Part Number*	*Qty.*	*Description*
1	100-8586	1	Backing Plate ASM
2	104-6820	1	Adjuster Kit
2:1	100-8585	2	Washer-Bellville
2:2	100-8588	2	Adjuster Lever ASM
2:3	100-8584	2	Cover-Dust
2:4		2	Washer ●
2:5		2	Bolt ●
3	104-6818	4	Shoe And Lining Kit
4	104-6819	1	Hardware Kit
4:1	100-8583	2	Shoe Hold Down Spring ASM
4:2	100-8581	2	Spring-Upper
4:3	100-8582	2	Spring-Lower
4:4		2	Bolt And Washer ●
5	114-8333	1	Wheel Cylinder ASM
6	104-6825	1	LH Park Brake Lever ASM

● Not serviced separately

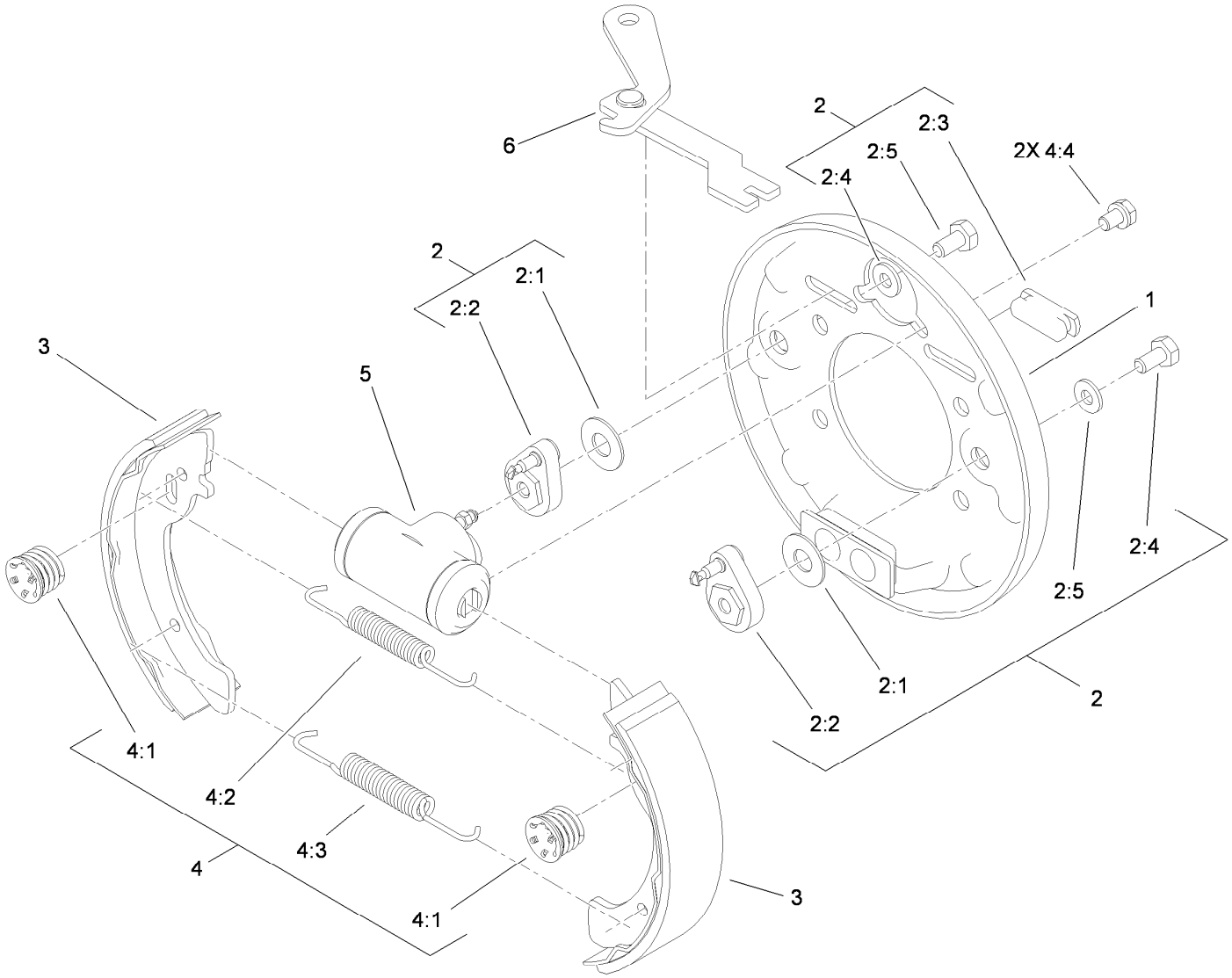

RH Rear Brake Assembly No. 114-8331

Ref.	*Part Number*	*Qty.*	*Description*
1	100-8586	1	Backing Plate ASM
2	104-6820	1	Adjuster Kit
2:1	100-8585	2	Washer-Bellville
2:2	100-8588	2	Adjuster Lever ASM
2:3	100-8584	2	Cover-Dust
2:4		2	Washer ●
2:5		2	Bolt ●
3	104-6818	4	Shoe And Lining Kit
4	104-6819	1	Hardware Kit
4:1	100-8583	2	Shoe Hold Down Spring ASM
4:2	100-8581	2	Spring-Upper
4:3	100-8582	2	Spring-Lower
4:4		2	Bolt And Washer ●
5	114-8333	1	Wheel Cylinder ASM
6	104-6826	1	RH Park Brake Lever ASM

● Not serviced separately

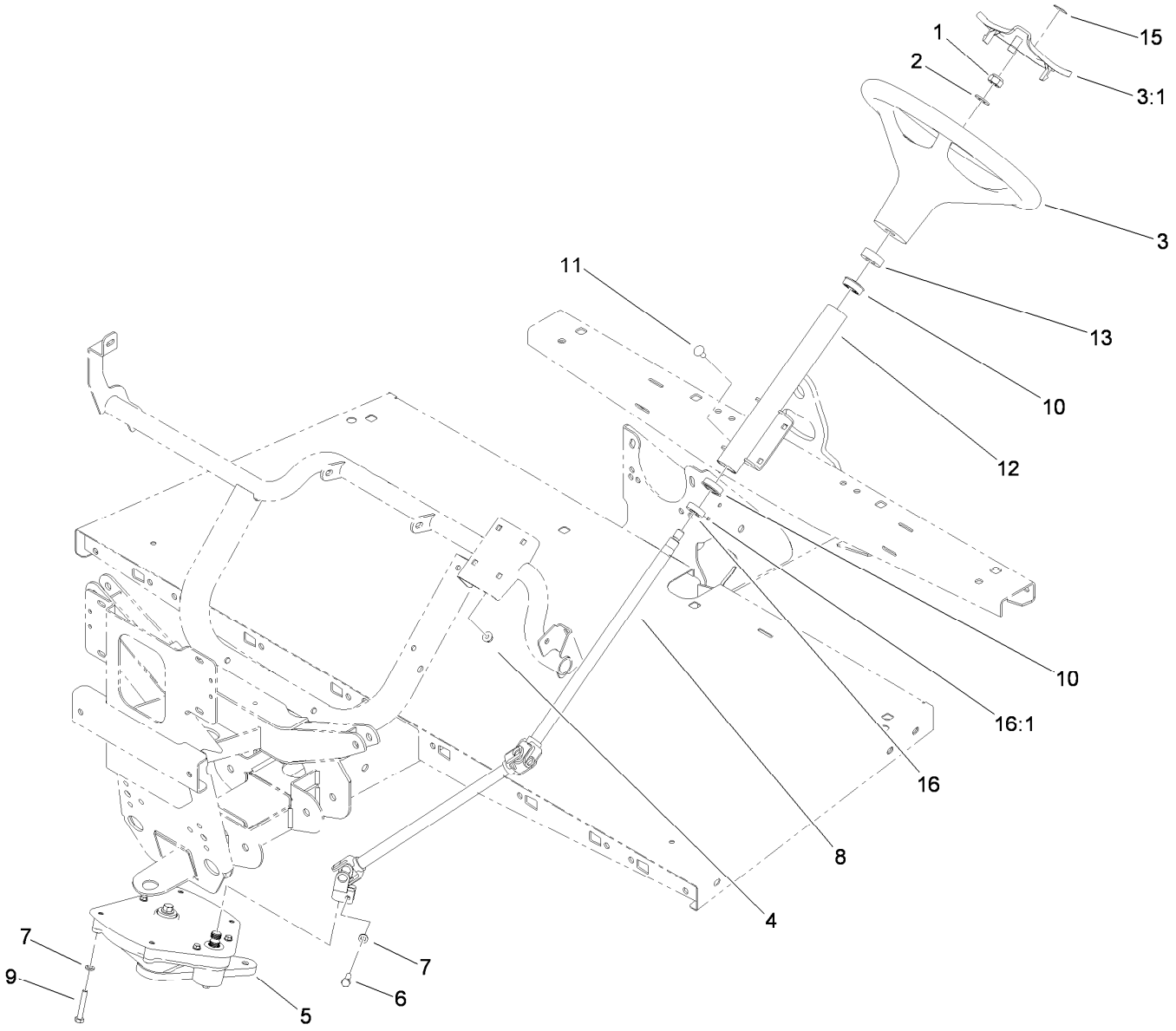

Upper Steering Assembly

Ref.	Part Number	Qty.	Description
1	119-9493	1	Nut-Lock, NI
2	3256-26	1	Washer-Flat
3	98-1471	1	Wheel-Steering
3:1	98-1468	1	Cover-Wheel, Steering
4	104-8300	4	Nut-Flange, NI
5	112-3130	1	Steering Box ASM
6	48-7730	1	Screw-Cap, HH
7	3253-4	5	Washer-Lock
8	112-3355	1	Steering Shaft

Ref.	Part Number	Qty.	Description
9	112-3305	4	Screw-HH
10	112-3262	2	Bearing
11	3230-1	4	Bolt-CARR
12	112-3264-03	1	Column ASM
13	21-9260	1	Cover-Dust
15	98-1459	1	Decal
16	111383	1	Collar
16:1	3245-32	1	Screw-HSH

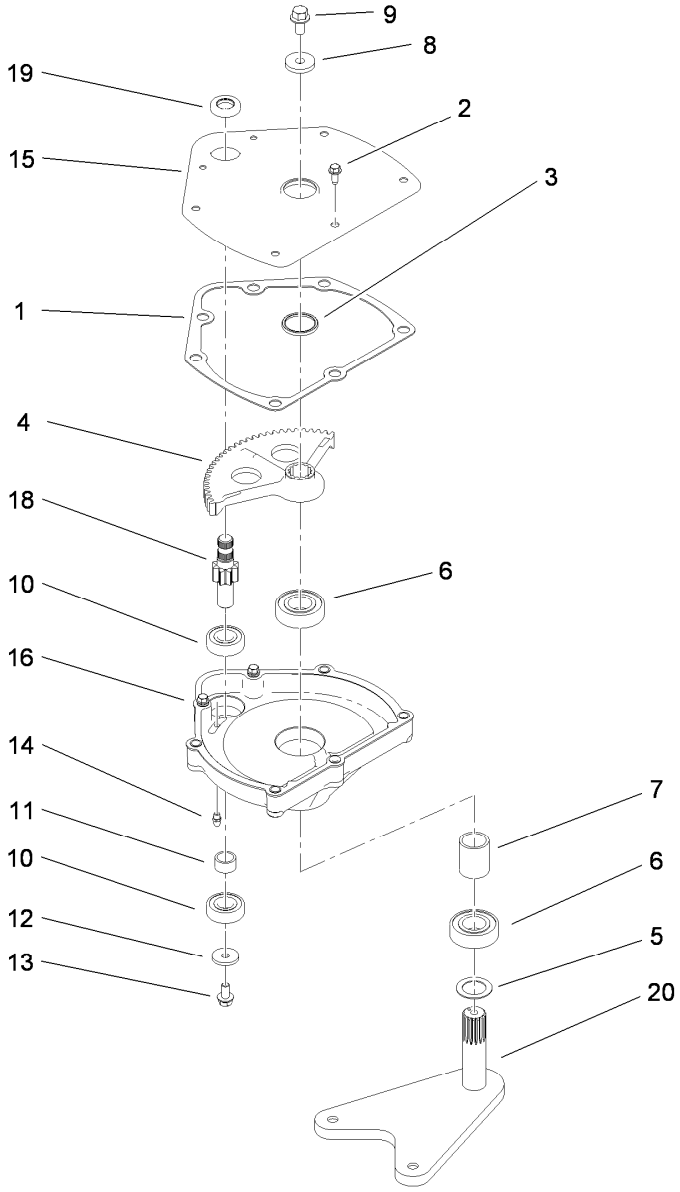

Steering Box Assembly No. 112-3130

Ref.	Part Number	Qty.	Description
1	94-2135	1	Gasket
2	32144-10	3	Screw-HWH
3	103118	1	Seal
4	99-7843	1	Sector-Gear
5	3256-42	1	Washer-Flat
6	251-82	2	Bearing-Ball
7	112-2917	1	Spacer
8	104-6563	1	Washer-Stepped
9	104-7156	1	Screw-HHF
10	38-7820	2	Bearing-Ball
11	94-2217	1	Spacer-Shaft, Input
12	1-613235	1	Washer
13	98-3498	1	Screw-HH
14	302-5	1	Fitting-Grease
15	112-2918-03	1	Cover-Housing, Steering
16	114-8309	1	Housing-Steering
18	115-7726	1	Gear-Pinion
19	99-7657	1	Seal-Oil
20	112-3096-03	1	Pitman Arm ASM

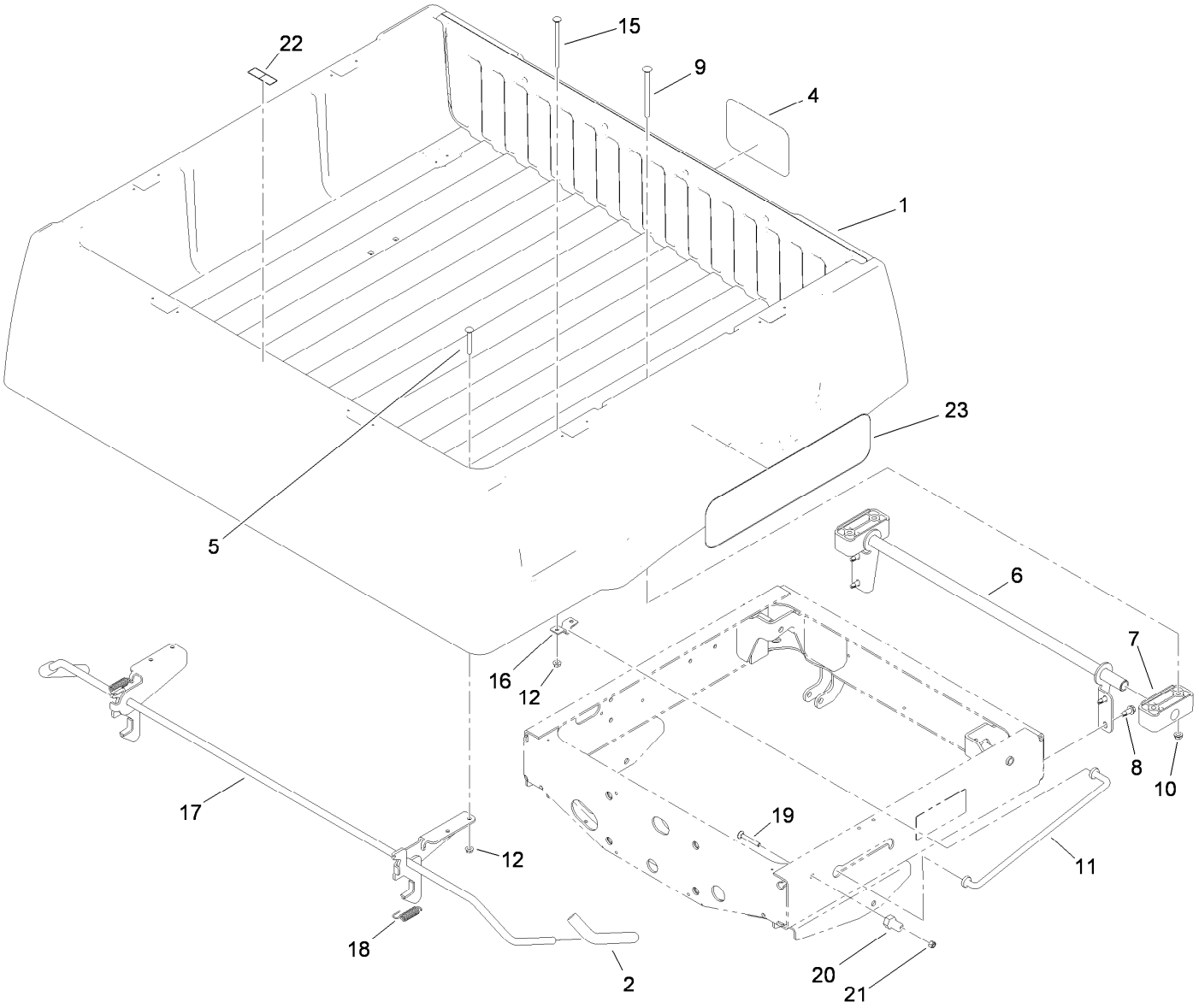

Box and Tailgate Installation Assembly

Ref.	Part Number	Qty.	Description
1	119-9710	1	Cargo Bed Service ASM
2	119-9627	2	Grip-Handle
4	104-7213	1	Decal
5	3230-8	4	Screw-CARR
6	119-0848-03	1	Pivot Bracket ASM
7	119-0835	2	Bushing-Pivot
8	105-6245	4	Screw-Tapping
9	109-6795	4	Bolt-CARR
10	3290-357	4	Nut-HHF, Whiz
11	119-0844	1	Rod-Prop

Ref.	Part Number	Qty.	Description
12	32128-20	6	Nut-HF
15	119-0914	2	Bolt-CARR
16	99-7896	1	Bracket-U, Prop Rod
17	119-0837	1	Latch ASM
18	5-7290	2	Spring-Tension
19	3230-7	2	Screw-CARR
20	104-7248	2	Pin-Latch
21	3296-29	2	Nut-Lock, NI
22	115-7739	1	Decal-No Riders
23	119-0894	2	Decal

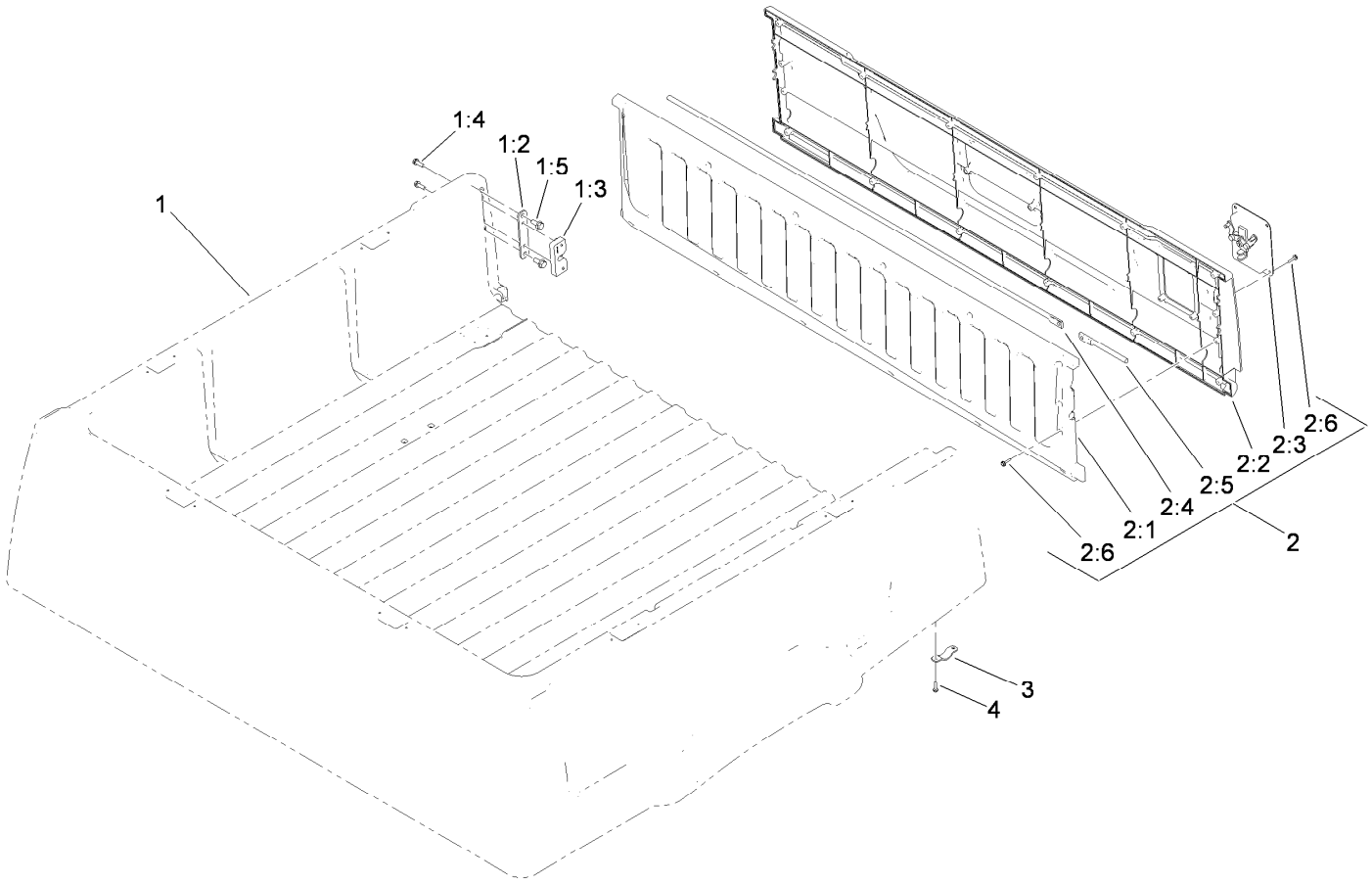

Cargo Bed Service Assembly No. 119-9710

Ref.	*Part Number*	*Qty.*	*Description*
1		1	Cargo Bed W/ Strikes ●
1:2	119-0838	2	Mount-Striker
1:3	119-0892	2	Strike-Latch
1:4	3234-47	4	Screw-HHF
1:5	32105-15	4	Screw
2		1	Tailgate ASM ●
2:1	119-0839	1	Tailgate Inner
2:2	119-0840	1	Tailgate Outer
2:3	119-0891	1	Handle-Latch
2:4	119-0842	1	Rod-Latch, RH
2:5	119-0843	1	Rod-Latch, LH
2:6	98-1375	20	Screw-HWH
3	119-0849	2	Retainer-Tailgate
4	98-1375	4	Screw-HWH

● Not serviced separately

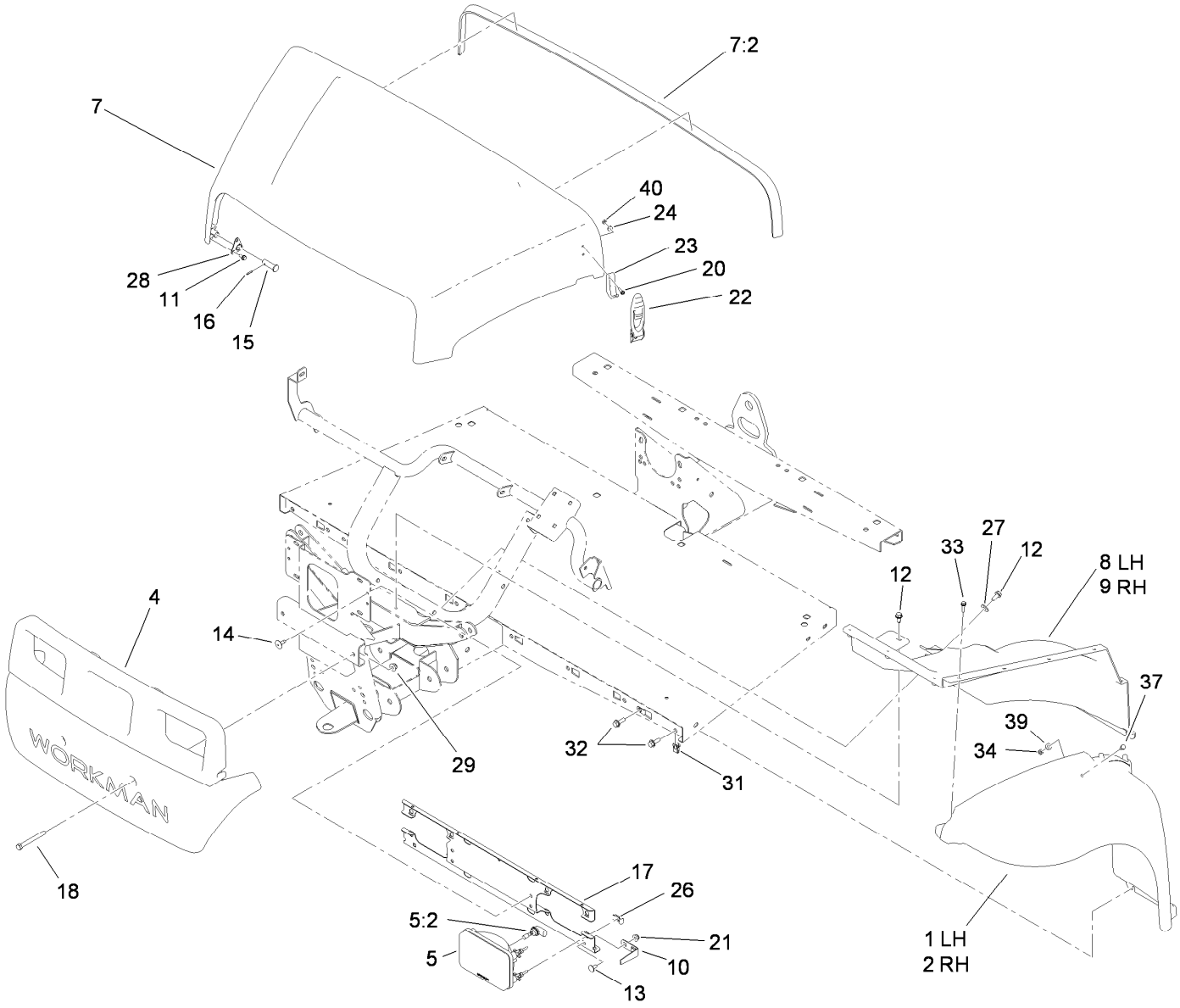

Hood and Fender Assembly

Ref.	Part Number	Qty.	Description
1	112-3371	1	Fender-LH
2	112-3370	1	Fender-RH
4	112-3365	1	Bumper
5	114-8322	2	Headlight
5:2	115-2395	1	Light Bulb ASM
7	115-7636	1	Hood ASM
7:2	115-7635	1	Seal-Foam
8	112-3369	1	Well-Fender, LH
9	112-3368	1	Well-Fender, RH
10	112-3373	2	Keeper-Pivot, Hood
11	46-8093	6	Screw-Plastite
12	32104-32	4	Screw-HWH
13	3230-18	2	Screw-CARR
14	146489	4	Rivet
15	117-5094	2	Pin-Clevis
16	32121-50	2	Pin-Spring
17	119-0841-03	1	Bracket-Headlight

Ref.	Part Number	Qty.	Description
18	115-7660	2	Screw-HHF
20	32105-13	4	Screw-HWH
21	32128-20	2	Nut-HF
22	115-2416	2	Latch-Rubber
23	103-2897	2	Latch-Catch
24	3256-14	4	Washer-Flat
26	115-2408	6	Clip-Speed
27	3256-71	2	Washer-Flat
28	112-3308	2	Retainer-Pin
29	104-8301	2	Nut-Flange, NI
31	112-3306	10	Nut
32	3234-29	10	Screw-HHF
33	46-8091	20	Screw-HWH
34	3296-42	2	Nut-Lock, NI
37	321-39	2	Screw-HH
39	3256-22	2	Washer-Flat
40	3296-2	4	Nut-Lock, NI

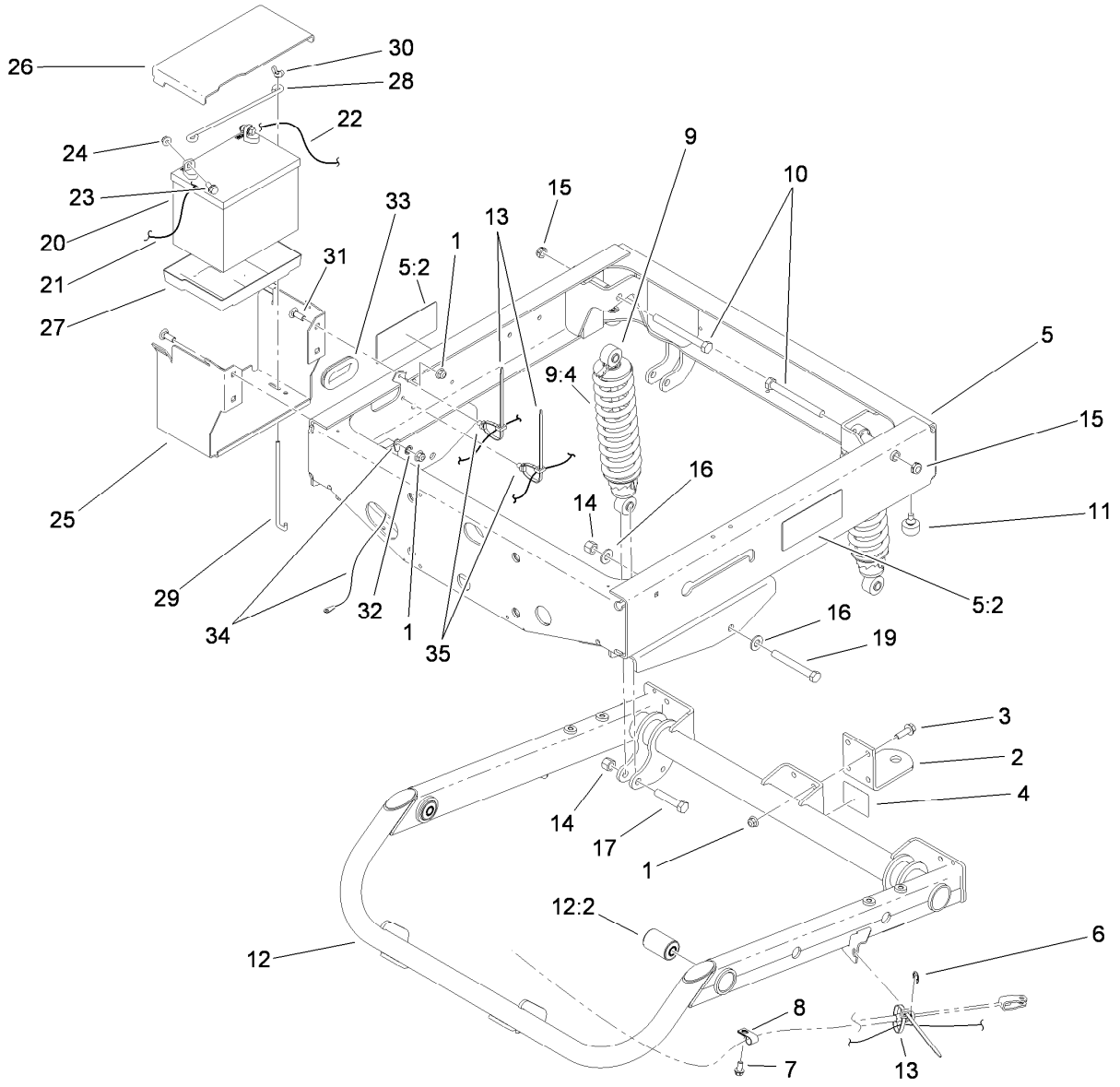

Frame Assembly

Ref.	Part Number	Qty.	Description
1	104-8301	8	Nut-Flange, NI
2	99-7654-03	1	Hitch-Duty, Light
3	3234-24	4	Screw-HHF
4	99-7350	1	Decal-Rating, Hitch (Light Duty)
5	119-9628	1	Rear Frame Service ASM
5:2	99-7345	2	Decal-Warning
6	32120-47	2	Ring-Retaining, External
7	32144-4	2	Screw-HWH
8	2412-89	2	Clamp-R
9	112-3168	2	Rear Shock/Spring ASM
9:4	112-3386	1	Spring
10	325-19	2	Screw-HH
11	87-2440	2	Bumper-Rubber
12	115-7614	1	Swing Arm ASM
12:2	112-3377	2	Bushing-Arm, Control
13	3290-378	4	Tie-Cable
14	3296-23	4	Nut-Lock, NI
15	3296-45	2	Nut-Lock, NI

Ref.	Part Number	Qty.	Description
16	87-7270	4	Washer-Thrust
17	325-10	2	Screw-HH
19	325-17	2	Screw-HH
20	104-8162	1	Battery
21	115-8107	1	Cable-Battery, Negative
22	114-9404	1	Cable-Battery, Positive
23	3234-5	2	Screw-HHF
24	104-8300	2	Nut-Flange, NI
25	115-2302-03	1	Base-Battery
26	115-2394	1	Cover-Battery
27	106948	1	Tray-Battery
28	100-6434	1	Rod-Hold Down, Battery
29	100-6435	2	Post-Battery
30	32103-22	2	Nut-Wing
31	3231-22	4	Screw-CARR
32	3254-6	1	Washer-Lock, Internal
33	240-12	1	Grommet
34	115-8108	1	Cable-Battery, Negative
35	32180-030	2	Clip-Harness

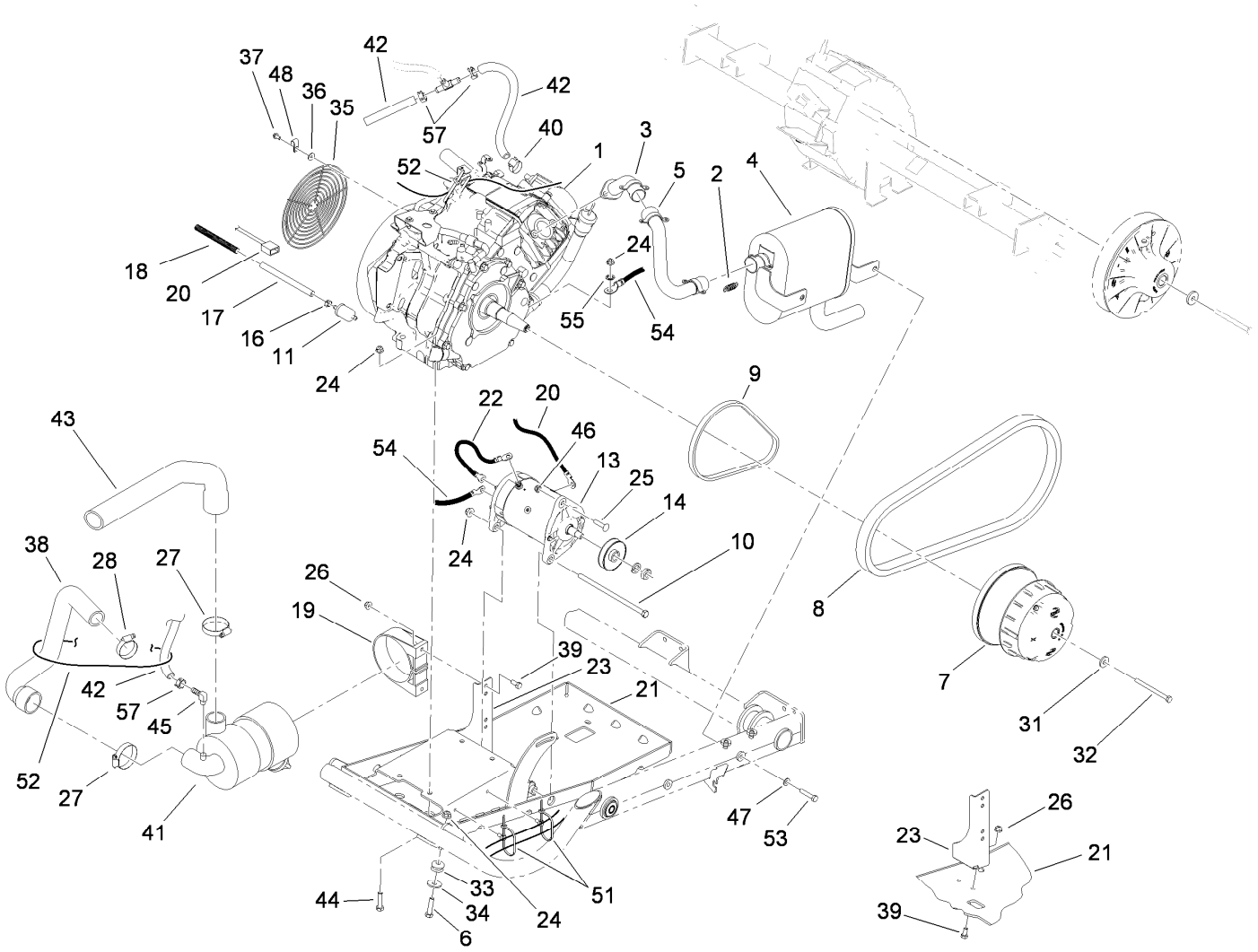

Engine and Clutch Assembly

Ref.	Part Number	Qty.	Description
1	119-0816	1	Engine-Yamaha, Mz360
2	104-6478	4	Spring-Coupler, Exhaust
3	104-6511	1	Manifold
4	119-0746	1	Muffler
5	119-0716	1	Pipe-Exhaust, Kohler
6	323-8	2	Screw-HH
7	119-0802	1	Clutch-Primary
8	119-0710	1	Belt-Variable
9	112-3131	1	Belt-Starter
10	323-30	1	Screw-HH
11	94-2690	1	Filter-Fuel
13	119-9545	1	Starter Generator ASM
14	119-9482	1	Pulley-Drive
16	2412-98	3	Clamp
17	107-0588	1	Hose-Fuel
18	99-7377	1	Conduit-Line, Fuel
19	95-5806	1	Bracket-Mounting
20	115-8125	1	Harness-Wire, Engine
21	119-0707-03	1	Engine Tray ASM
22	99-7403	1	Cable-Negative
23	119-0863-03	1	Bracket-Cleaner, Air

Ref.	Part Number	Qty.	Description
24	104-8301	7	Nut-Flange, NI
25	112-6950	1	Screw-CARR
26	104-8300	4	Nut-Flange, NI
27	2412-130	2	Clamp-Hose
28	2412-111	1	Clamp
31	119-0724	1	Washer-Flange
32	119-0721	1	Screw-HH
33	63-9750	2	Mount
34	2844	2	Washer
35	119-9502	1	Grill-Engine
36	3256-78	4	Washer-Flat
37	33103-012	4	Screw-HHF
38	115-7983	1	Hose, Intake
39	3234-36	4	Screw-HHF
40	2412-36	1	Clamp-Hose
41	99-7120	1	Air Cleaner ASM
42	74-9120	2	Hose-Overflow, Radiator
43	115-7625	1	Hose-Intake
44	323-9	4	Screw-HH
45	99-7230	1	Fitting-90 DEG
46	3296-69	1	Nut-Lock NI

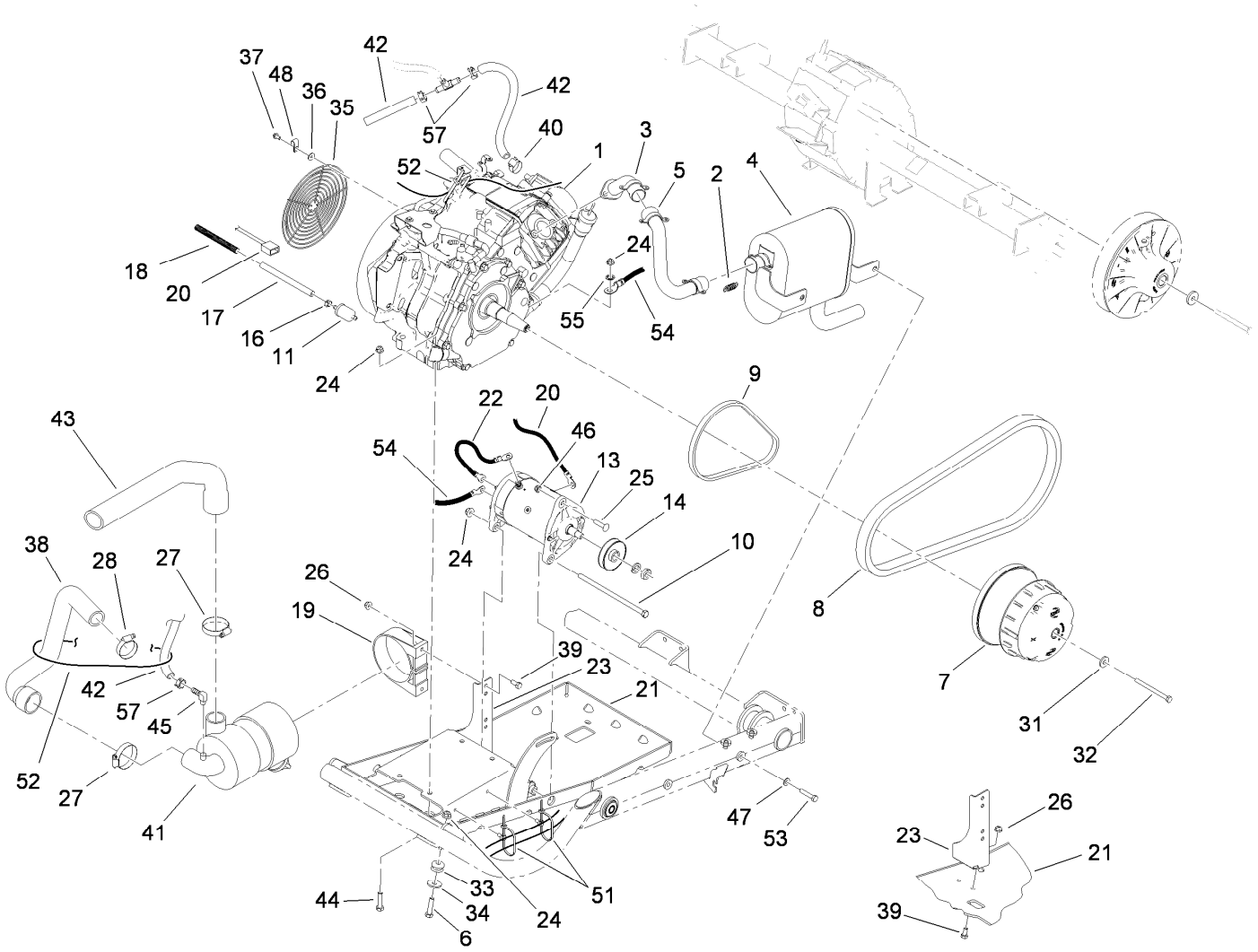

Engine and Clutch Assembly (continued)

Ref.	Part Number	Qty.	Description
47	3253-4	2	Washer-Lock
48	2412-89	1	Clamp-R
51	32180-030	2	Clip-Harness
52	3290-378	2	Tie-Cable

Ref.	Part Number	Qty.	Description
53	322-11	2	Screw-HH
54	100335	1	Wire-Ground
55	3254-6	1	Washer-Lock, Internal
57	103-1988	3	Clamp-Hose

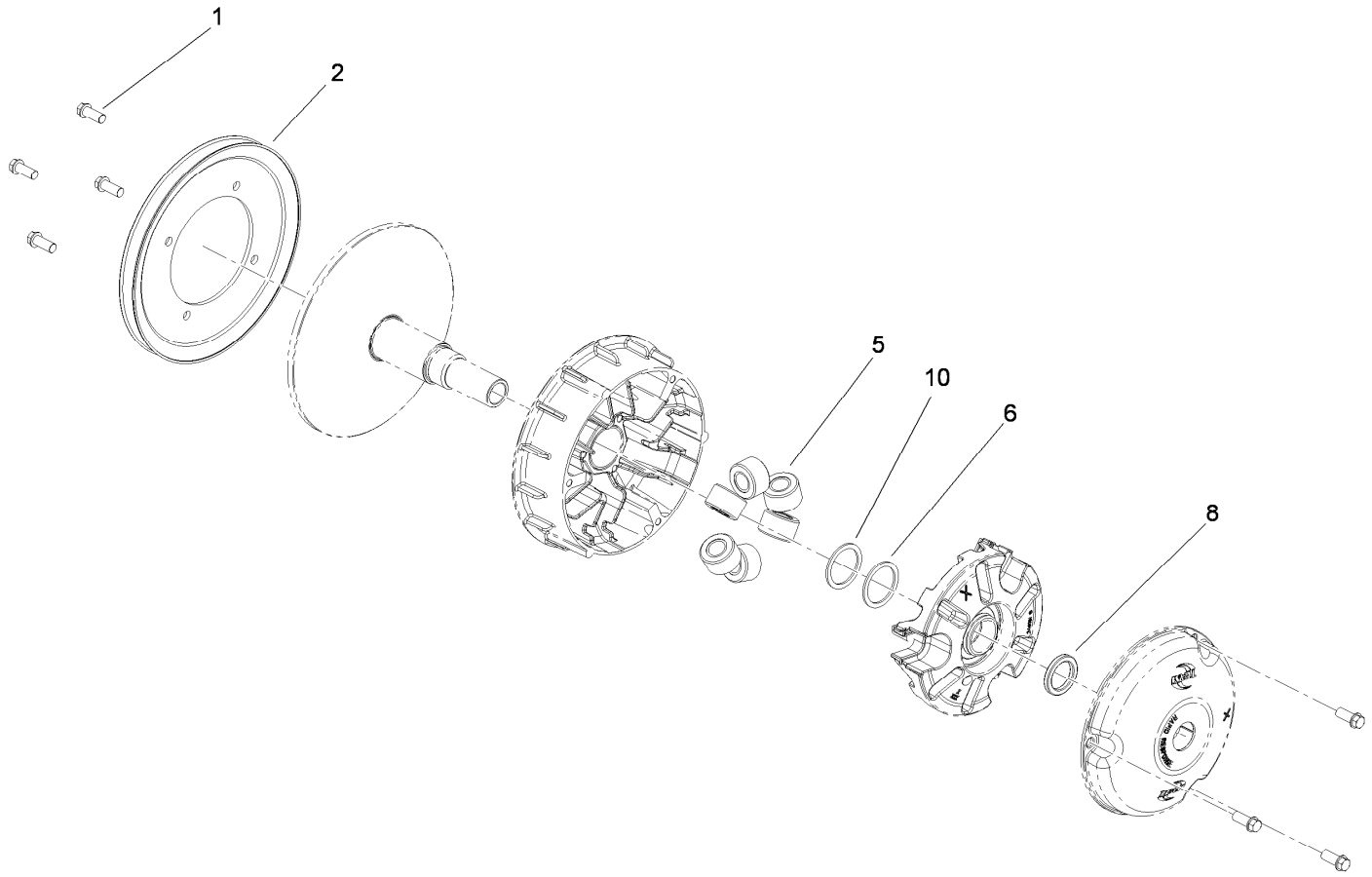

Primary Clutch Assembly No. 119-0802

Ref.	*Part Number*	*Qty.*	*Description*
1	49-2040	7	Screw-HWHTF
2	119-0813	1	Pulley-Primary
5	119-0805	6	Weight-Roller (38.3Gm)
6	119-0812	1	Shim-Spider
8	119-0807	1	Shim-Limiter (.175)
10	119-0815	1	Shim-Spider

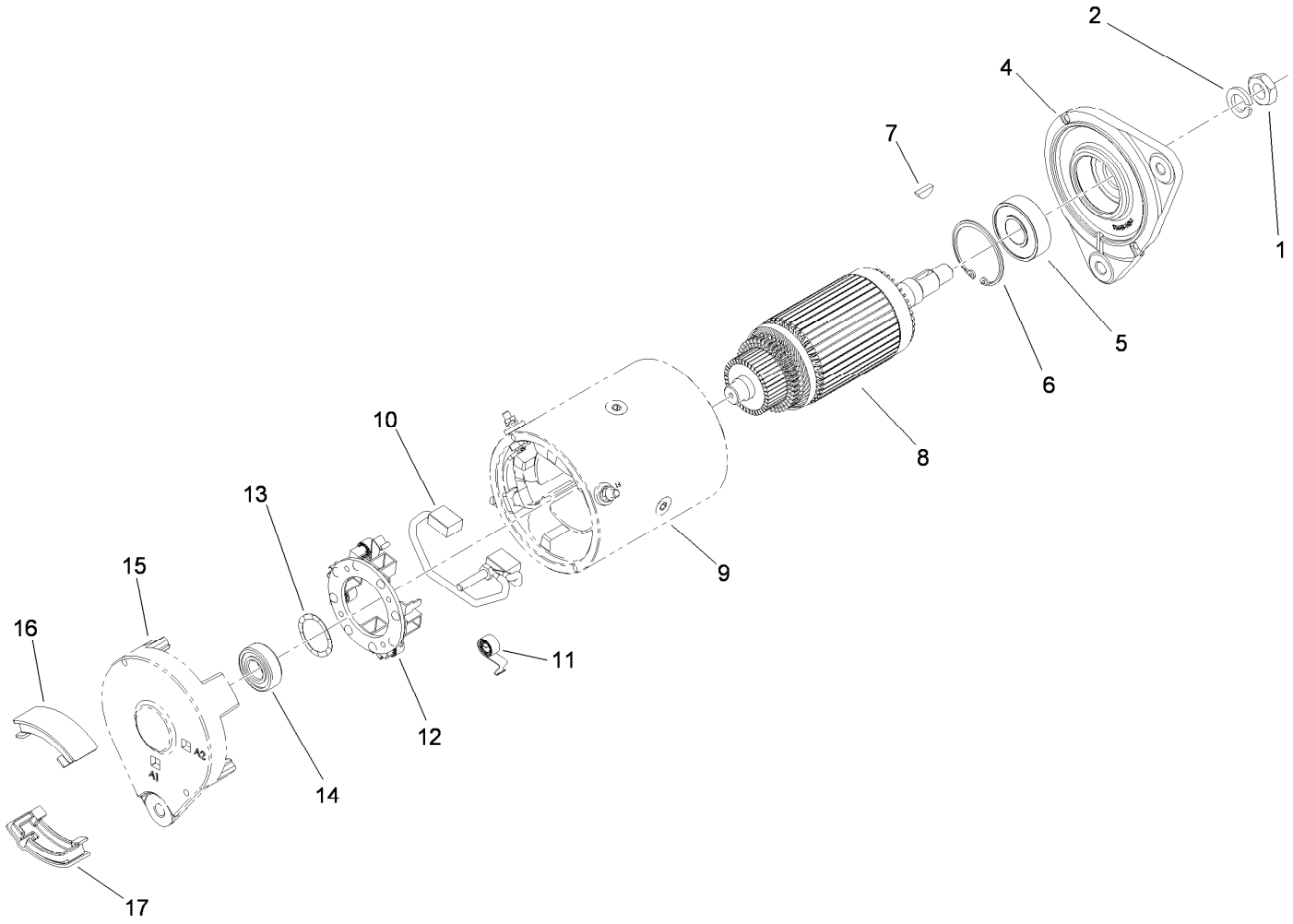

Starter Generator Assembly No. 119-9545

Ref.	Part Number	Qty.	Description
1	119-9651	1	Nut
2	119-9652	1	Washer-Lock
4	119-9654	1	Head-Drive End
5	119-9655	1	Bearing
6	119-9656	1	Ring-Retaining
7	119-9657	1	Key-Woodruff
8	119-9658	1	Armature ASM
9		1	Frame And Field Assembly ●
10	119-9659	1	Brush Lead And Terminal Service Kit
11	119-9660	4	Spring-Brush
12	119-9661	1	Brush Box ASM
13	119-9662	1	Washer-Wave
14	119-9663	1	Bearing
15		1	Cummutator End Head ●
16	119-9664	3	Plug-Rubber
17	119-9665	1	Plug-Rubber

● Not serviced separately

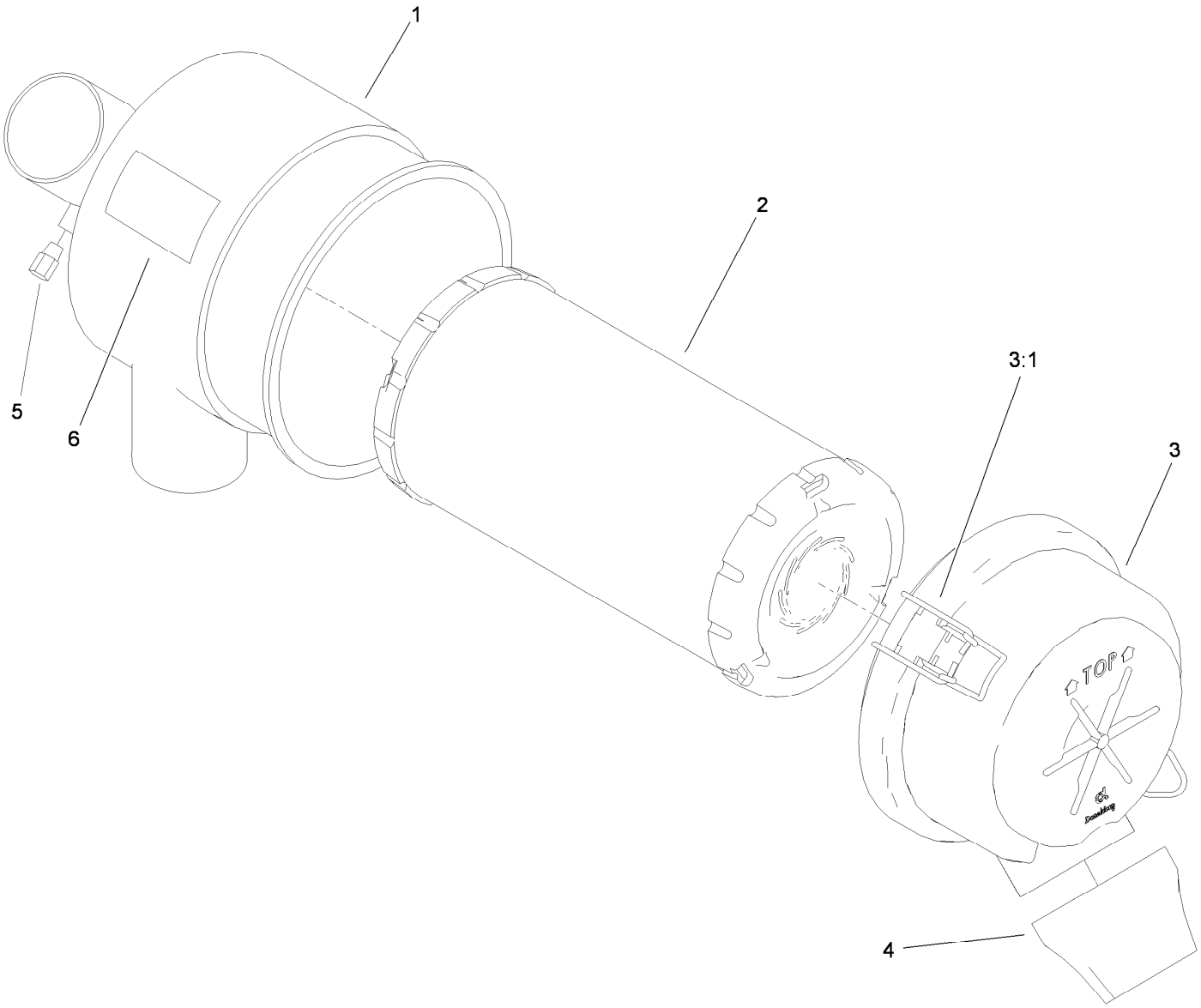

Air Cleaner Assembly No. 99-7120

Ref.	*Part Number*	*Qty.*	*Description*
1		1	Body ●
2	108-3811	1	Filter-Air
3	94-3652	1	Cover ASM
3:1	1-643283	2	Latch-Cleaner, Air
4	87-9400	1	Valve-Vacuator
5		1	Plug ●
6		1	Marking ●

● Not serviced separately

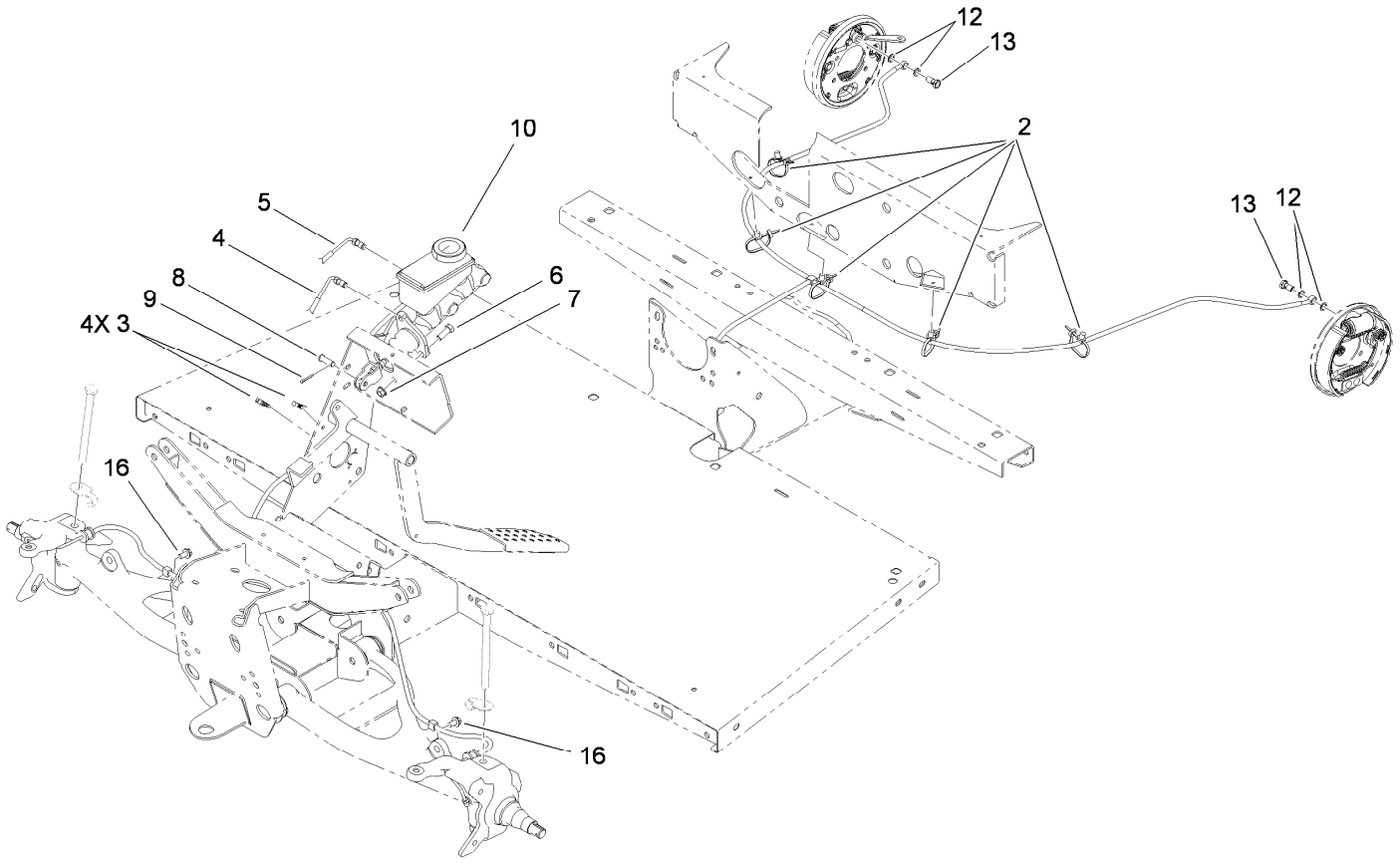

Master Cylinder and Brake Line Assembly

Ref.	*Part Number*	*Qty.*	*Description*
2	32180-030	5	Clip-Harness
3	114-8324	4	Clip-Line, Brake
4	112-2925	1	Front Brake Line ASM
5	112-2926	1	Rear Brake Line ASM
6	323-6	2	Screw-HH
7	3290-357	2	Nut-HHF, Whiz
8	283-2	1	Pin-Clevis
9	3272-10	1	Pin-Cotter
10	104-6782	1	Cylinder-Master
12	115-2341	4	Washer-Banjo
13	115-2340	2	Bolt-Banjo
16	32104-82	2	Screw-HHF

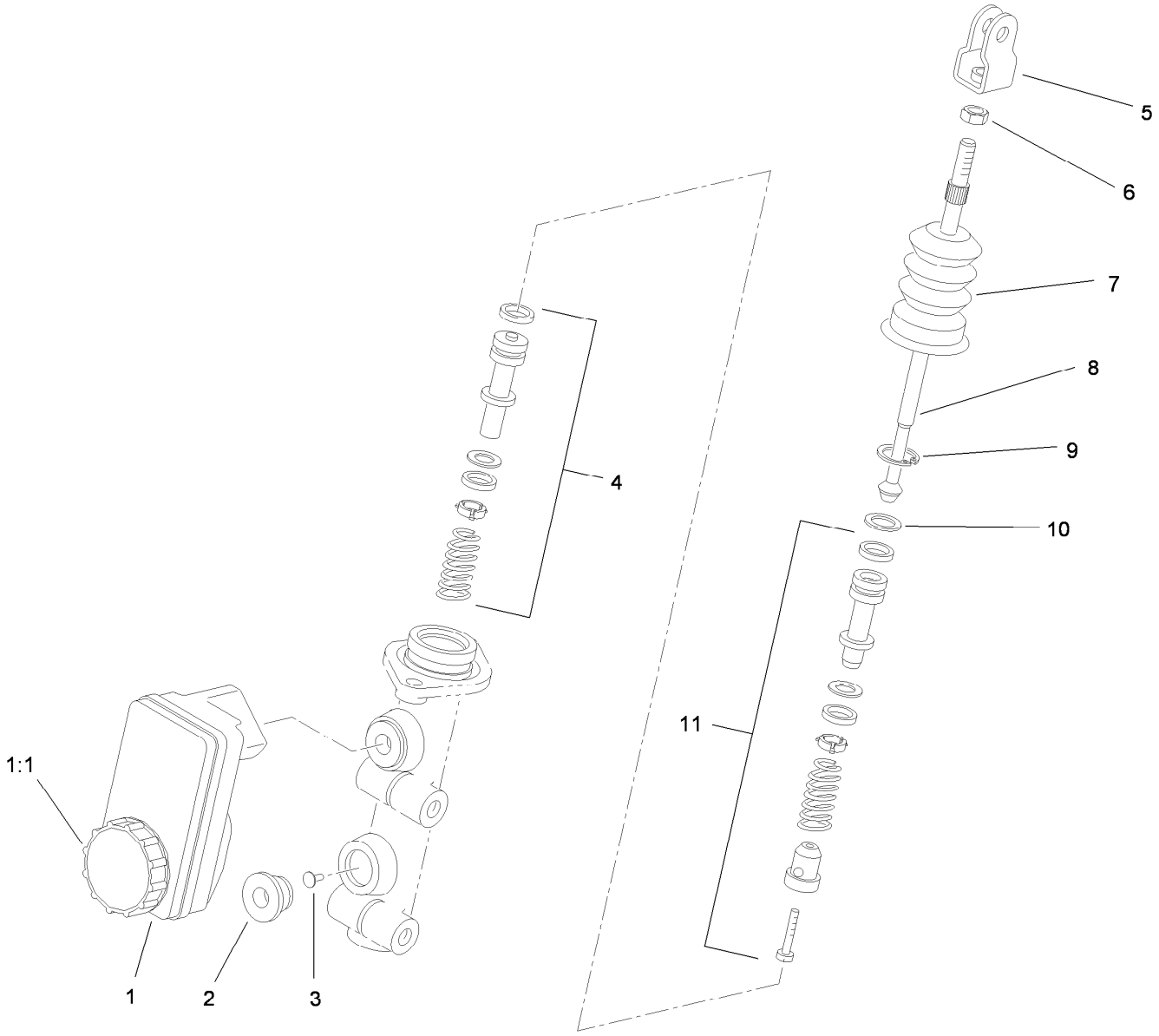

Master Cylinder Assembly No. 104-6782

Ref.	*Part Number*	*Qty.*	*Description*
1	104-6845	1	Reservoir ASM
1:1	92-4112	1	Cap ASM
2	93-8971	2	Seal-Port, Flange
3	92-4103	1	Pin-Stop
4	92-4102	1	Secondary Piston ASM
5	92-4110	1	Clevis
6	21-0360	1	Nut-Hex
7	94-5209	1	Cover-Dust
8	94-5210	1	Rod-Push
9	92-4109	1	Ring-Snap
10	92-4108	1	Retainer-Washer
11	92-4101	1	Primary Piston ASM

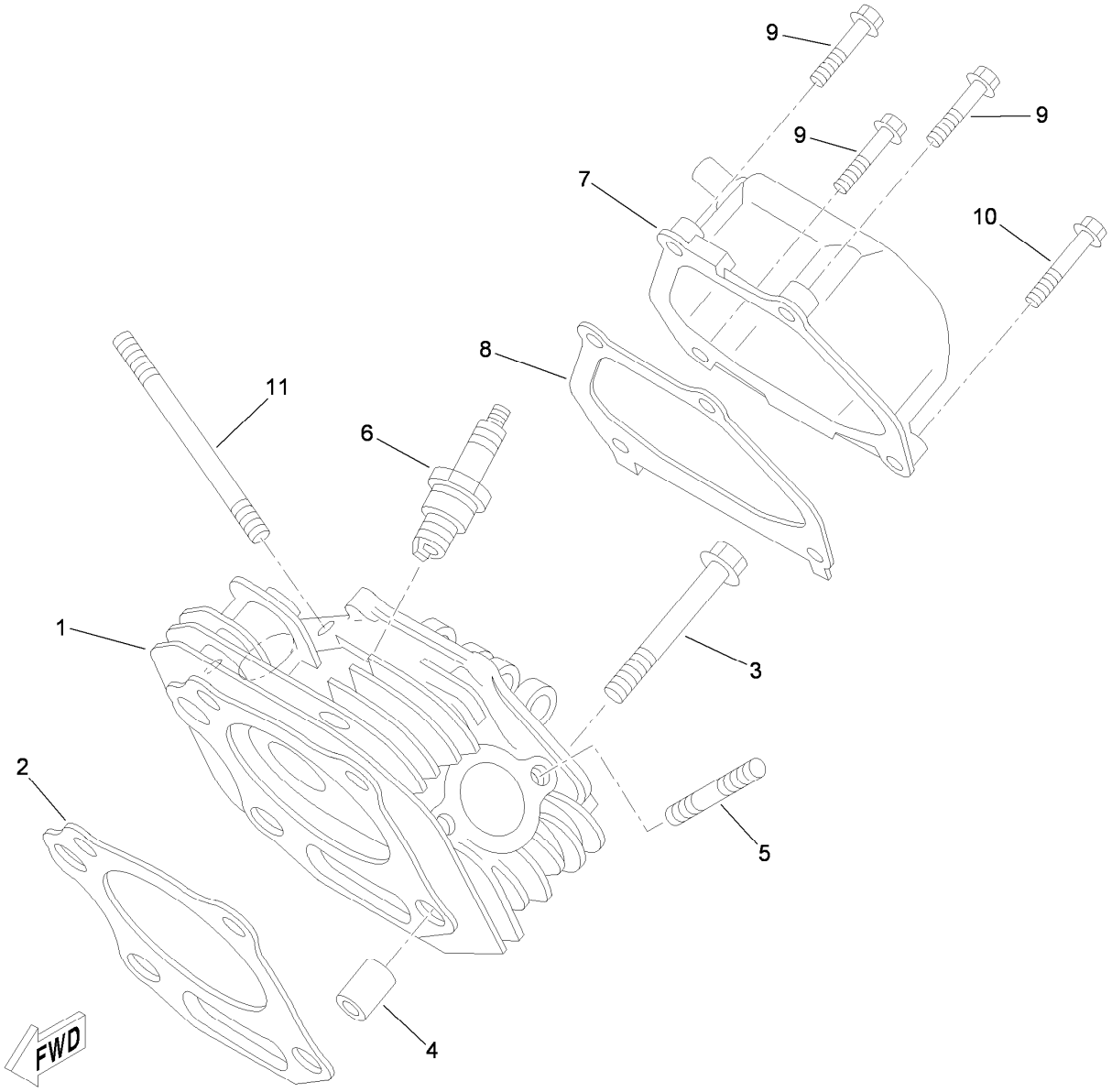

Cylinder Head Assembly

Ref.	*Part Number*	*Qty.*	*Description*
1	120-5600	1	Head-Cylinder
2	120-5601	1	Gasket-Head, Cylinder
3	120-5602	4	Bolt-Flange
4	120-5603	2	Pin-Dowel
5	120-5604	2	Bolt-Stud
6	120-5605	1	Sparkplug (Ngk Bpr4Es)
7	120-5606	1	Cover-Head, Cylinder
8	120-5607	1	Gasket-Cover, Head
9	120-5608	3	Bolt-Flange
10	120-5609	1	Bolt-Flange
11	120-5610	2	Bolt-Stud

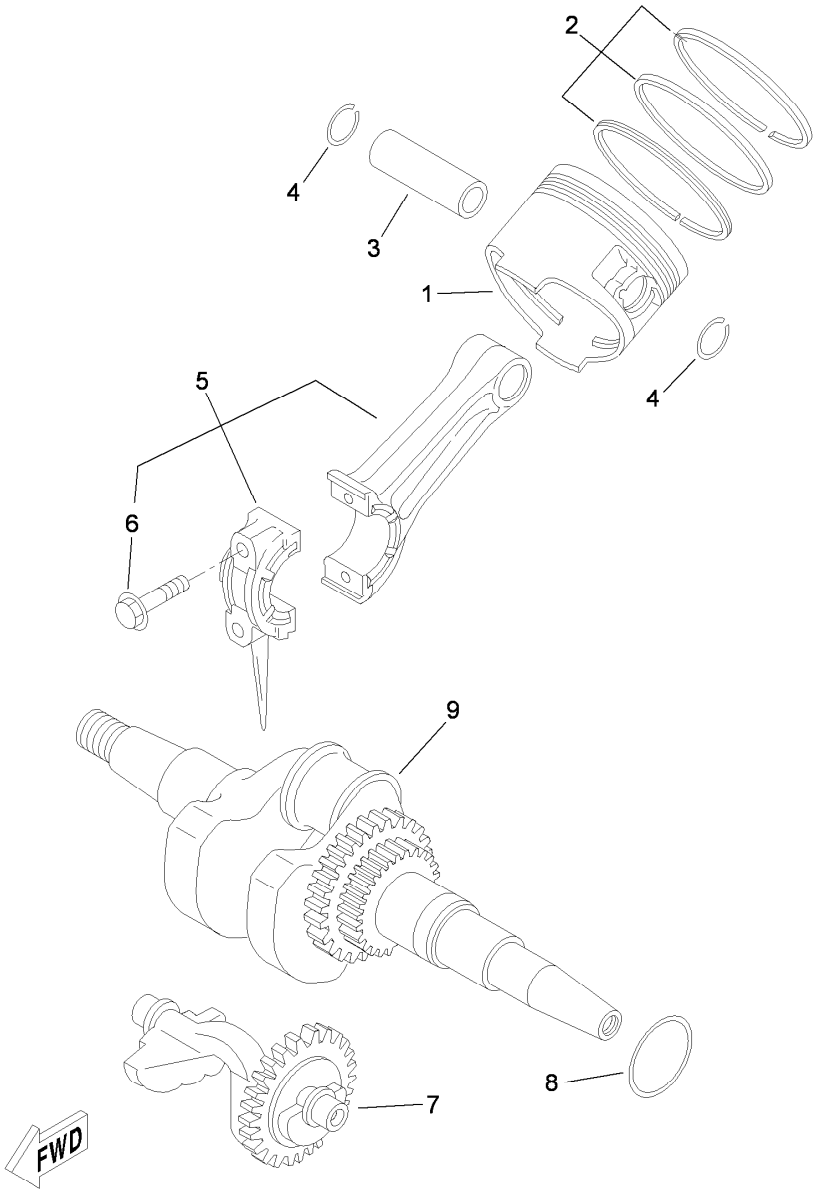

Crankshaft and Piston Assembly

Ref.	*Part Number*	*Qty.*	*Description*
1	120-5614	1	Piston (0.50Mm O/S)
1	120-5613	1	Piston (0.25Mm O/S)
1	120-5612	1	Piston (STD)
2	120-5615	1	Piston Ring Set (STD)
2	120-5616	1	Piston Ring Set (0.25Mm O/S)
2	120-5617	1	Piston Ring Set (0.50Mm O/S)
3	120-5618	1	Pin-Piston
4	120-5619	2	Circlip
5	120-5620	1	Connecting Rod ASM
6	120-5621	2	Bolt- Rod, Connecting
7	120-5622	1	Weight
8	120-5623	1	Shim-Crank
9	120-5611	1	Crankshaft ASM

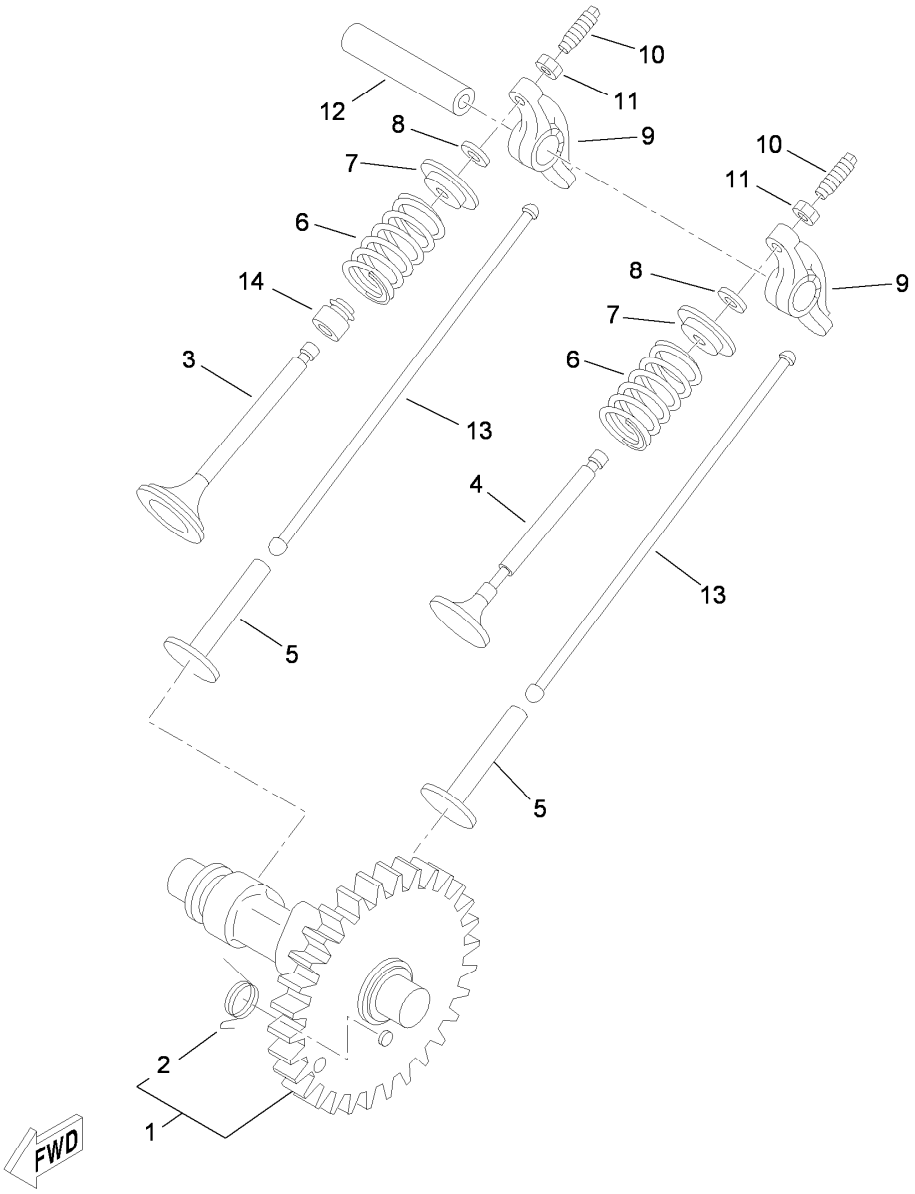

Camshaft and Valve Assembly

Ref.	*Part Number*	*Qty.*	*Description*
1	120-5624	1	Camshaft ASM
2	120-5625	1	Spring-Decompression
3	120-5626	1	Valve-Intake
4	120-5627	1	Valve-Exhaust
5	120-5628	2	Lifter-Valve
6	120-5629	2	Spring-Compression
7	120-5630	2	Retainer-Spring, Valve
8	120-5631	2	Cotter-Valve
9	120-5632	2	Arm-Rocker, Valve
10	120-5633	2	Screw-Adjusting, Valve
11	120-5634	2	Nut
12	120-5635	1	Shaft-Rocker
13	120-5636	2	Rod-Push, Valve
14	120-5637	1	Seal-Stem, Valve

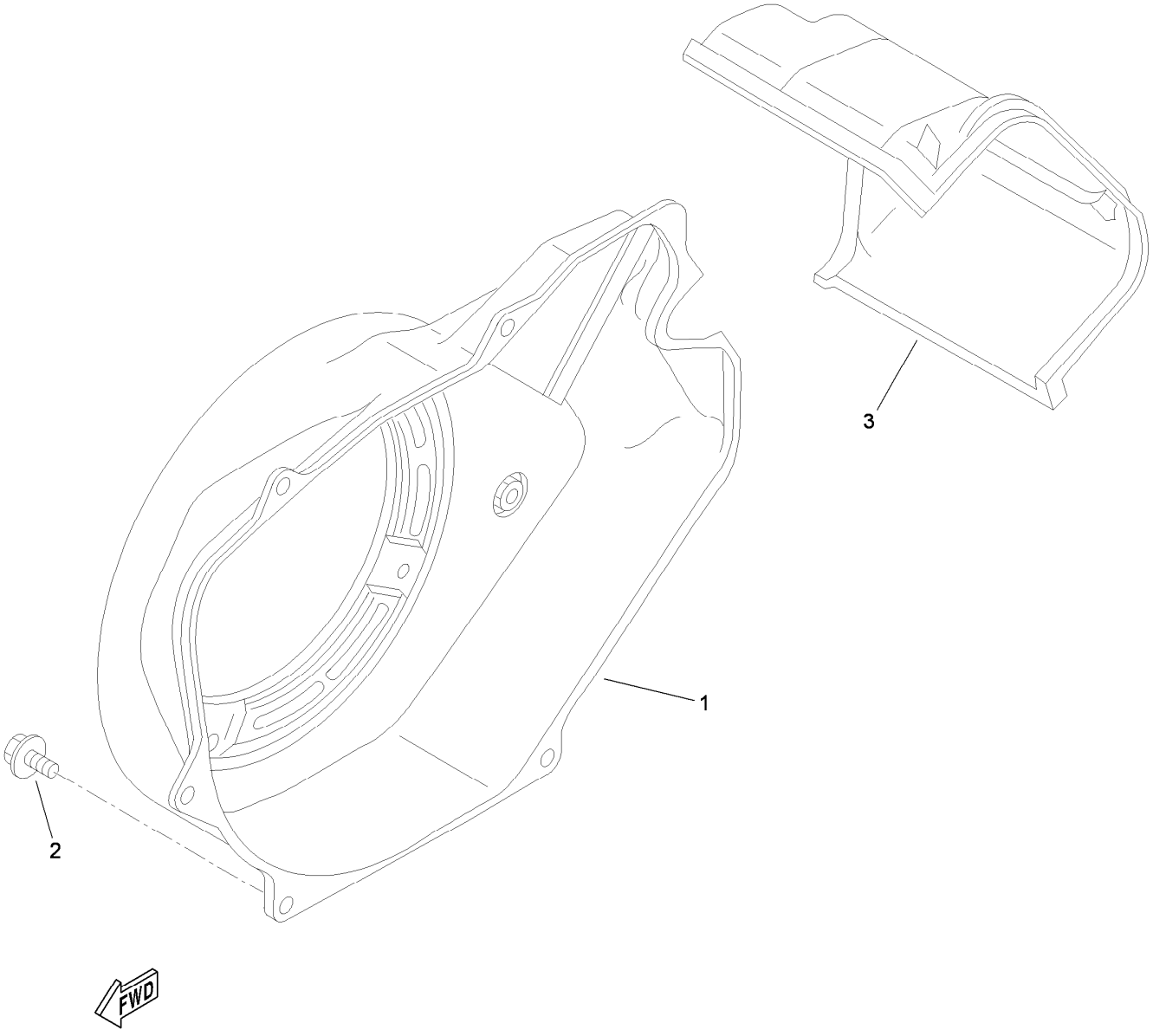

Starter Air Shroud Assembly

Ref.	*Part Number*	*Qty.*	*Description*
1	120-5638	1	Case-Fan
2	120-5639	5	Bolt-Flange
3	120-5640	1	Shroud-Air, Cylinder

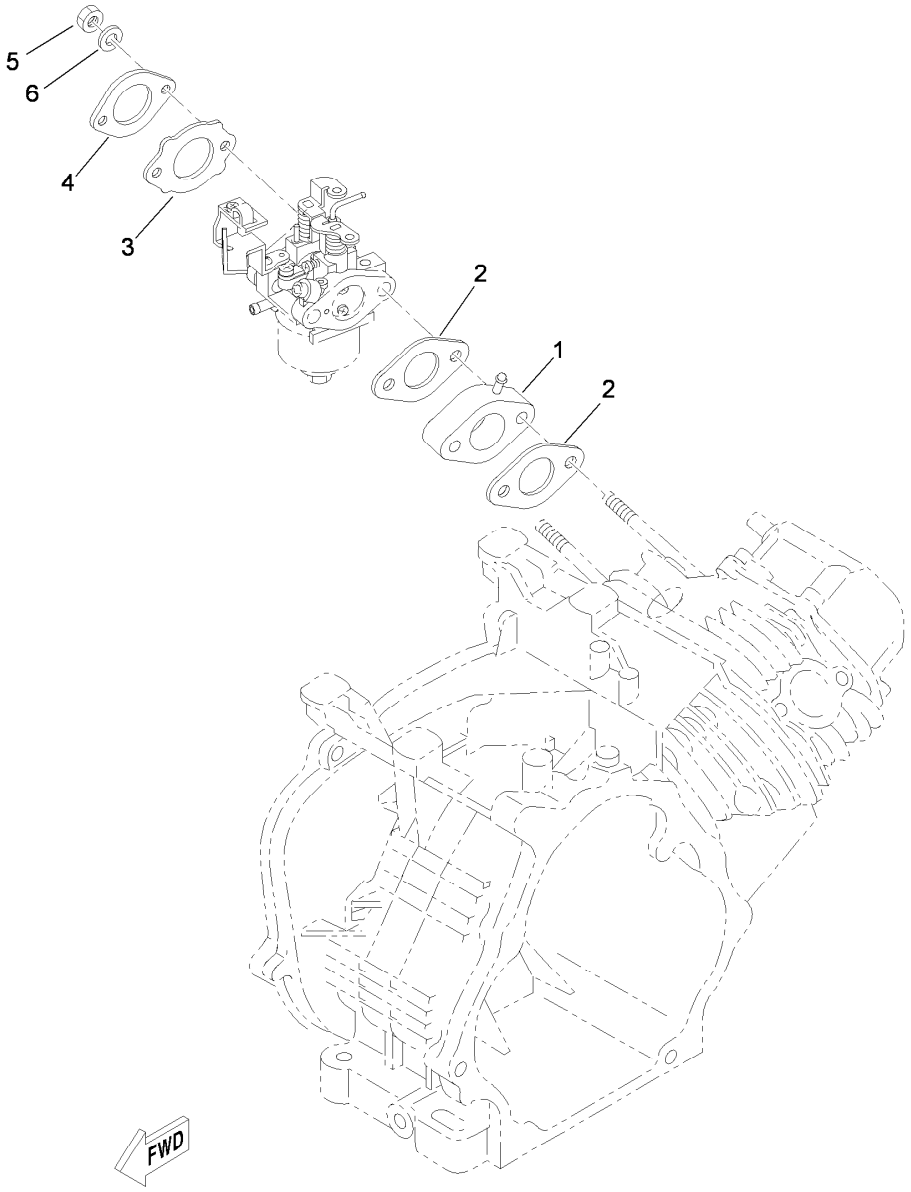

Intake Assembly

Ref.	*Part Number*	*Qty.*	*Description*
1	120-5641	1	Joint-Carburetor
2	120-5642	2	Gasket
3	120-5643	1	Gasket
4	120-5644	1	Plate
5	120-5645	2	Nut
6	120-5646	2	Washer-Spring

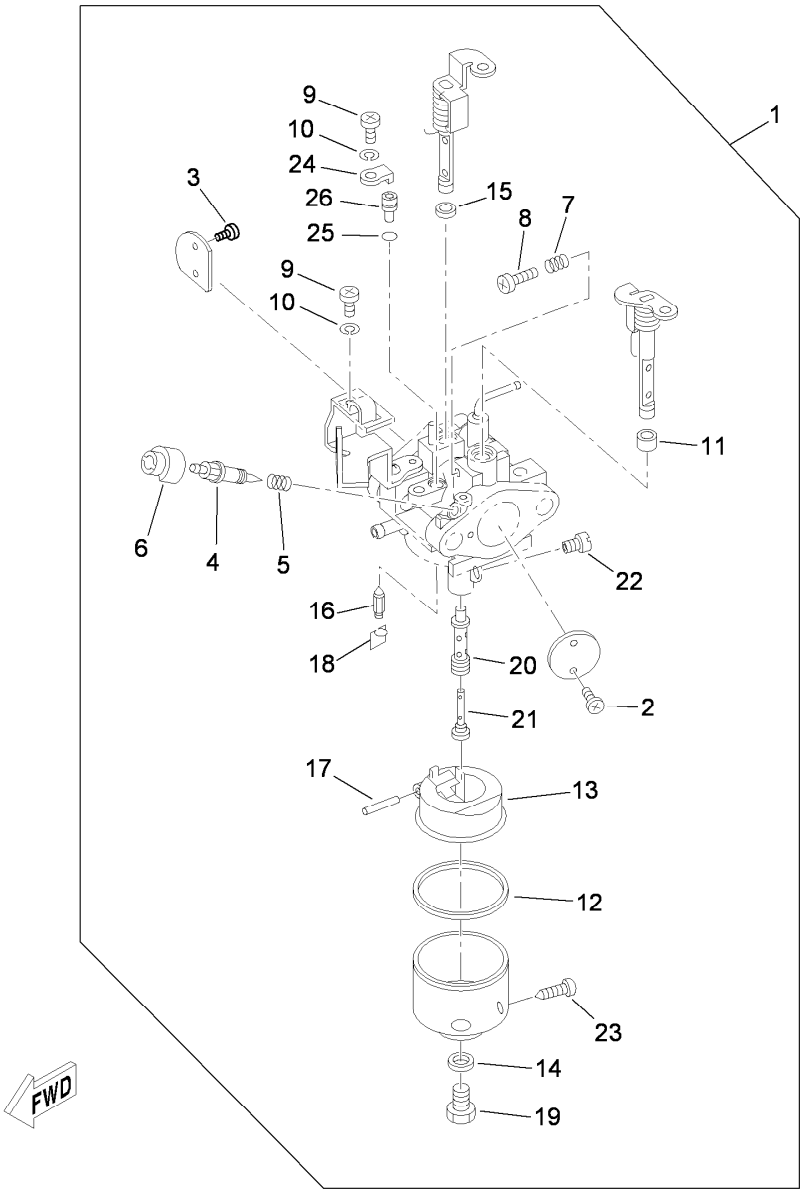

Carburetor Assembly

Ref.	Part Number	Qty.	Description
1	120-5647	1	Carburetor ASM
2	120-5648	2	Screw
3	120-5649	2	Screw-Rod
4	120-5650	1	Screw-Adjusting, Pilot
5	120-5651	1	Spring
6	120-5652	1	Cap
7	120-5653	1	Spring
8	120-5654	1	Screw-Throttle
9	120-5655	2	Screw-Pan Head
10	120-5656	2	Washer-Spring
11	120-5657	1	Washer
12	120-5658	1	Gasket-Chamber, Float
13	120-5659	1	Float
14	120-5660	1	Gasket
15	120-5661	1	Seal
16	120-5662	1	Needle ASM
17	120-5663	1	Pin-Float
18	120-5664	1	Clip
19	120-5665	1	Bolt-Holding
20	120-5666	1	Nozzle-Main
21	120-5667	1	Pipe-Bleed, Main
22	120-5668	1	Jet-Main (115)
23	120-5669	1	Plug-Drain
24	120-5670	1	Plate
25	120-5671	1	O-Ring
26	120-5672	1	Jet-Pilot (53.8)

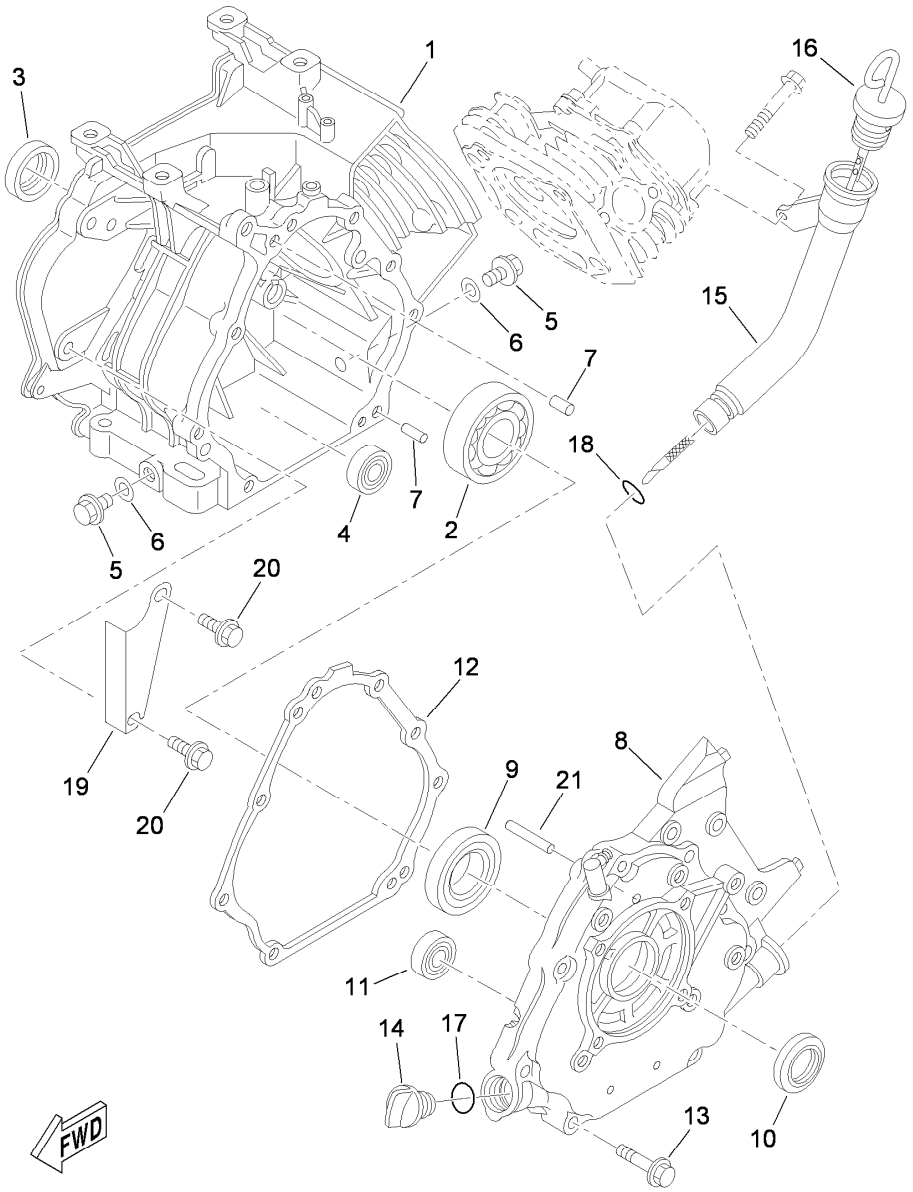

Crankcase Assembly

Ref.	Part Number	Qty.	Description
1	120-5673	1	Crankcase
2	120-5674	1	Bearing
3	120-5675	1	Seal-Oil
4	120-5676	2	Bearing
5	120-5678	2	Plug-Screw, Straight
6	120-5679	2	Gasket
7	120-5680	2	Pin-Dowel
8	120-5681	1	Cover-Crankcase
9	120-5682	1	Bearing
10	120-5675	1	Seal-Oil
11	120-5676	1	Bearing

Ref.	Part Number	Qty.	Description
11	120-5677	1	Shaft-Flyweight
12	120-5686	1	Gasket-Cover, Crankcase
13	120-5687	6	Bolt-Flange
14	120-5688	1	Plug-Oil
15	120-5689	1	Pipe-Oil
16	120-5690	1	Gauge-Level
17	120-5691	1	O-Ring
18	120-5692	1	O-Ring
19	120-5693	1	Plate-Baffle
20	120-5694	2	Bolt-Flange
21	120-5677	1	Shaft-Flyweight

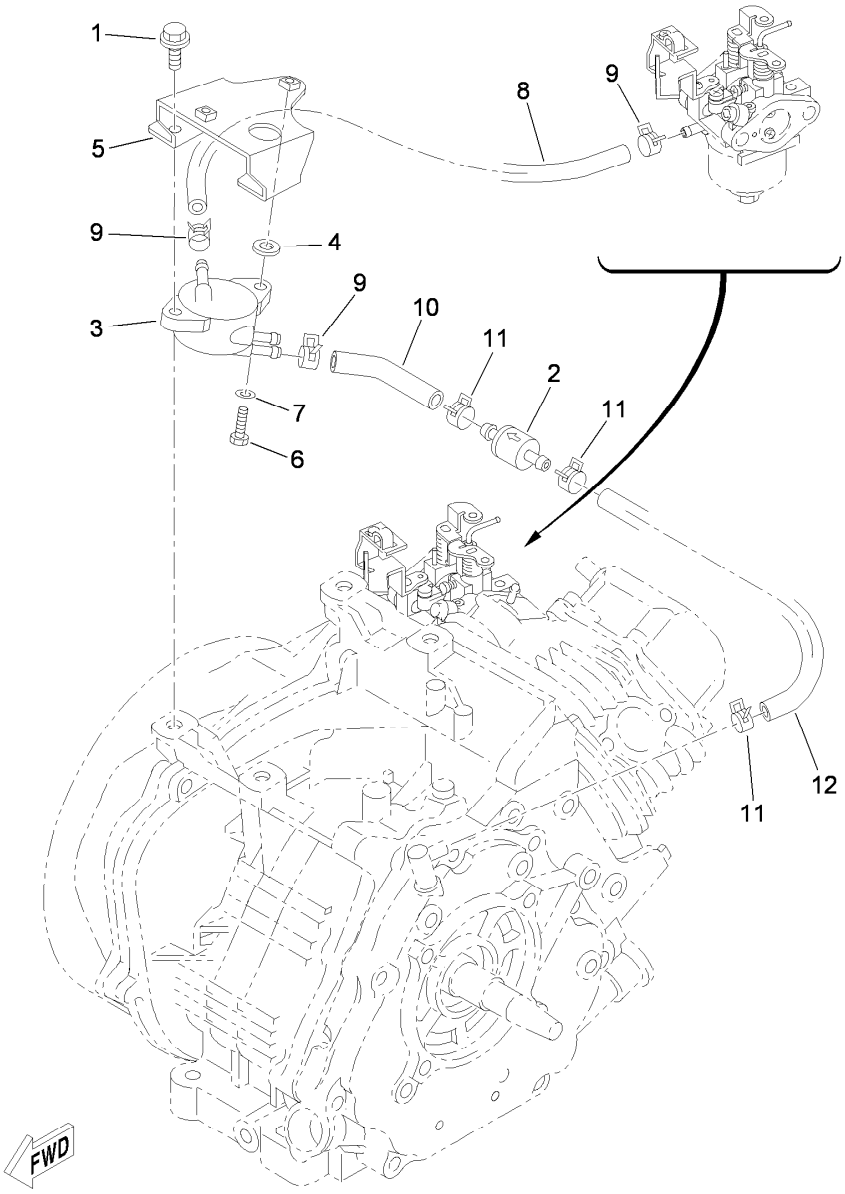

Fuel Pump Assembly

Ref.	*Part Number*	*Qty.*	*Description*
1	120-5695	2	Bolt-Flange
2	120-5696	1	Filter ASM
3	120-5697	1	Fuel Pump ASM
4	120-5698	2	Gasket
5	120-5699	1	Bracket-Pump, Fuel
6	120-5700	2	Bolt
7	120-5701	2	Washer-Plate
8	120-5702	1	Pipe-Fuel
9	120-5703	3	Clip
10	120-5704	1	Pipe-Breather
11	120-5705	3	Clip
12	120-5706	1	Hose

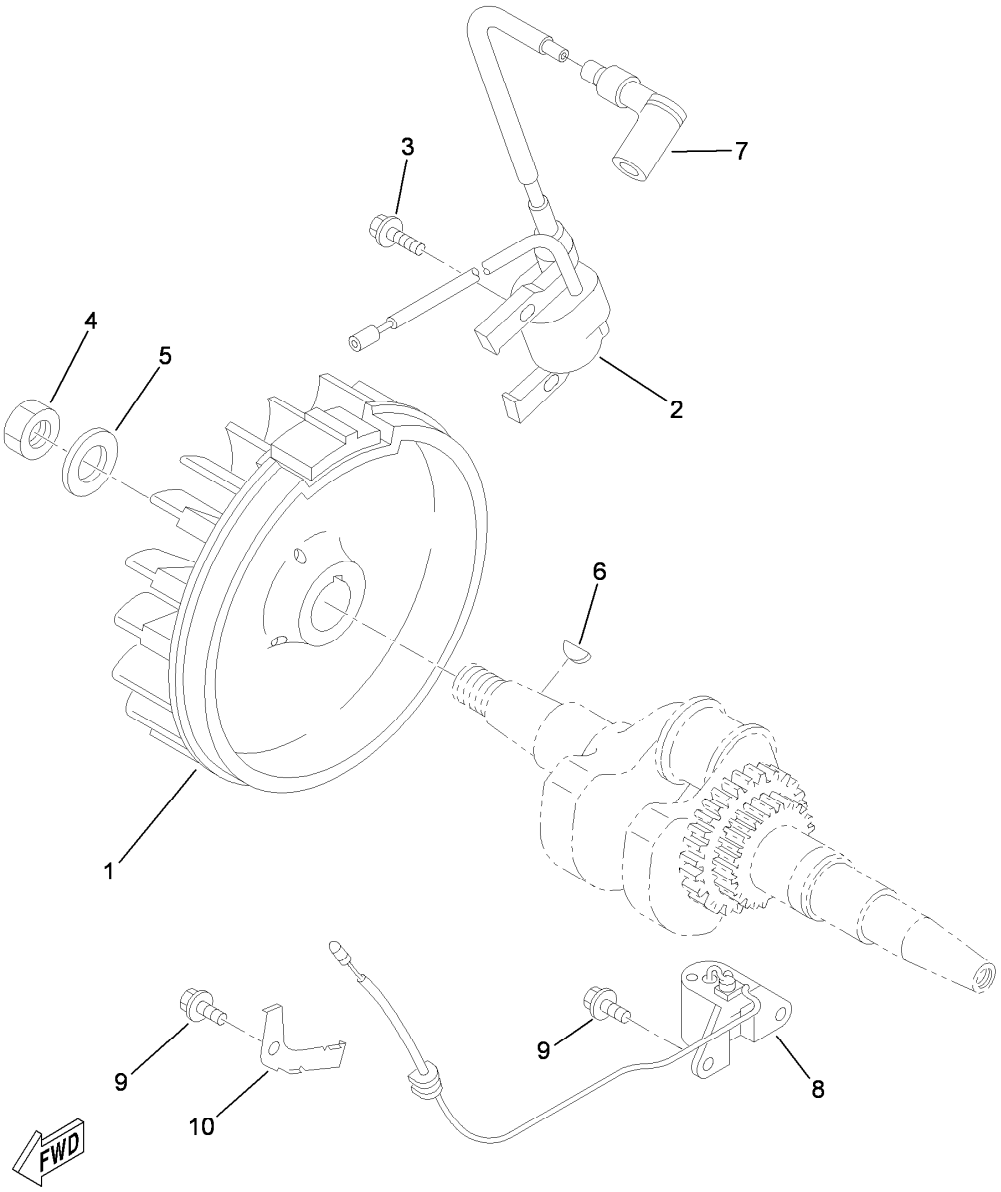

Magneto Assembly

Ref.	*Part Number*	*Qty.*	*Description*
1	120-5707	1	Rotor ASM
2	120-5708	1	T.C.I. Unit ASM
3	120-5709	2	Bolt-Flange
4	120-5710	1	Nut
5	120-5711	1	Washer-Plate
6	120-5712	1	Key-Woodruff
7	120-5713	1	Plug Cap ASM
8	120-5714	1	Oil Level Gauge ASM
9	120-5715	3	Bolt-Flange
10	120-5716	1	Clamp

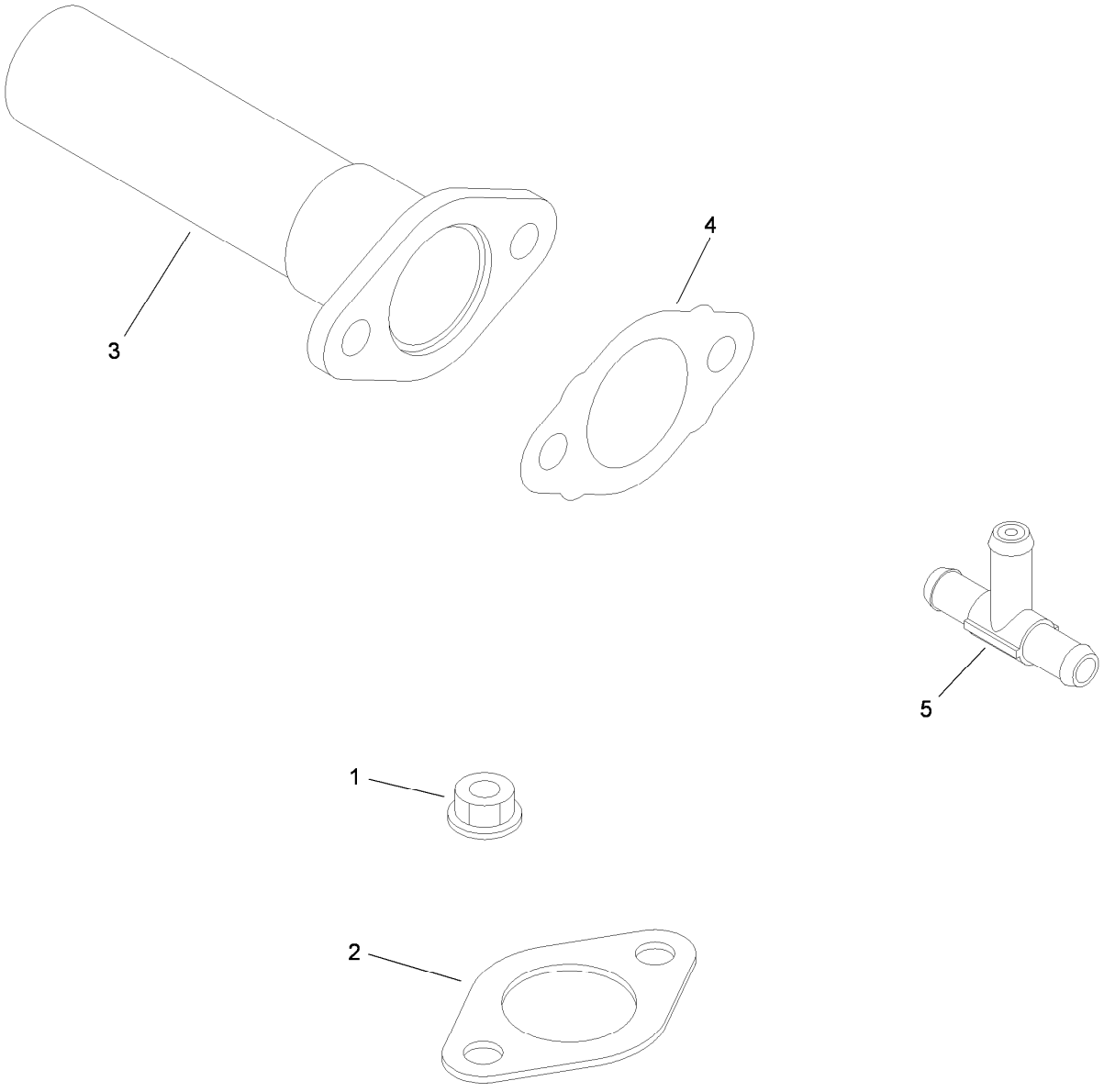

Engine Gaskets and Fittings

Ref.	*Part Number*	*Qty.*	*Description*
1	119-9540	2	Nut-Hex, M8 (F/W)
2	119-9541	2	Gasket-Exhaust (F/W)
3	119-9542	1	Tube-Intake (F/W)
4	119-9543	1	Gasket-Intake (F/W)
5	119-9544	1	Tee-Emission, Evaportive (F/W)

Attachments and Accessories

For 07266TC Workman MD Utility Vehicle

Product Name	Model/Part
Roll-Over Protection System	07276
Receiver Hitch Kit	07278
Canopy Kit	07324
Solid Windshield Kit	07325
Folding Windshield Kit	07326
Snow Plow	07327
Hard Cab	07328
Heavy-Duty Bumper Kit	07329
Heavy-Duty Brush Guard and Bumper Kit	07338
Sliding Window Door Kit	07352
Fixed Window Door Kit	07353
Electric Bed Lift Kit, 2011 and After Workman MD/MDX Utility Vehicle	07381
Wheel-5 Bolt	104-6889
Tire-AT 489, 24x10.5-10	104-7061
Tire-AT 489, 22x9.5-10	104-7062
Lift Wire Harness Kit	115-7823
Backup Alarm Kit	115-7824
Replacement Front Spring Kit	117-4847
Tire And Wheel Asm	119-0751
Side Mirror Kit	119-9546
Lanyard Kit, 2011 and After Workman MD Series Utility Vehicle	119-9590
Brake and Signal Light Kit, 2011 and After Workman MD Series Utility Vehicle	119-9603
Stake Pocket Adapter Kit, 2011 and After Workman MD Series Utility Vehicle	119-9604
Tie-Down Kit, 2011 and After Workman MD Series Utility Vehicle	119-9605
Bed Retrofit Kit, 2010 and Before Workman MD Series Utility Vehicle	119-9606
Battery Kit, Workman MD/MDX Utility Vehicle	119-9680
Spark Arrestor Screen	94-8157

Notes:

Notes:



Count on it.