Form No. 3365-269 Rev B

TORO®

Count on it.

Parts Catalog

Power Clear 180 Snowthrower

Model No. 38272—Serial No. 311000001 and Up

Register at www.Toro.com.

Original Instructions (EN)

Ordering Replacement Parts

To order replacement parts, please supply the part number, the quantity, and the description of each part desired.

Understanding Reference Numbers

Each identified part in an illustration has a reference number. The reference number for a part also appears in the parts list, along with other information about the part.

This catalog uses two special reference number formats, one to indicate parts in a service assembly and another to indicate the quantity of a given part in an illustration.

Service Assembly Reference Numbers

Parts in service assemblies have reference numbers in the form a:b. The a represents the reference number of the entire service assembly and the b represents a sequential number unique to each part within the service assembly.

For example, a wheel assembly might be identified by reference number 6, the tire by 6:1, the valve by 6:2, and the wheel by 6:3. When you order the assembly identified by reference number 6, you receive all parts identified by reference numbers 6:1,6:2, and 6:3. However, you may also order any part individually. Reference numbers of this type appear in illustration and in parts lists.

Reference Numbers Indicating Quantity

In an illustration, if a reference number indicates more than one part, the reference number has the form nX y. The n represents the quantity of the part, the X is the multiplication symbol, and the y represents the reference number.

For example, in an illustration, the reference number 2X 37 means that two of the parts identified by reference number 37 are indicated.

List of Abbreviations

AR: as required

ASM: assembly

BBC: blade brake control

BHTF: button head thread forming

CARR: carriage

CCW: counter clockwise

CW: clockwise

DEG: degrees

DPA: Dual Point Adjustment

ECM: electronic control module

EXT: external

FH: flat head

GA: gauge

HD: heavy-duty

HF: hex flange

HH: hex head

HHF: hex head flange

HHFTF: hex head flange thread forming

HJ: hex jam

HLH: hex lag head

HOC: height-of-cut

HSBH: hex socket button head

HSFH: hex socket flat head

HSH: hex socket head

HWH: hex washer head

HWHTF: hex washer head thread forming

HYD: hydraulic

LH: left hand

LP: Liquid Propane

NI: nylon insert

NPTF: national pipe thread fine

PFH: phillips flat head

PPH: phillips pan head

PPHTF: phillips pan head thread forming

PRH: phillips round head

PTH: phillips truss head

PTO: power-take-off

RH: right hand

ROPS: roll-over protection system

RRB: rear roller brush

SFH: slotted fillister head

SHH: slotted hex head

SHWH: slotted hex washer head

SPH: slotted pan head

SQH: square head

SRH: slotted round head

STD: standard

TAP: self tapping

TTH: torx truss head

© 2011—The Toro® Company
8111 Lyndale Avenue South
Bloomington, MN 55420

Contact us at www.Toro.com.
Printed in the USA.
All Rights Reserved

Contents

Main Frame and Wheel Assembly 4
Auger Housing Assembly 5
Rotor Drive Assembly 6
Belt and Drive Assembly 7
Engine and Mounting Assembly 8
Engine Assembly 9
Shroud Assembly 10
Handle Assembly 11
Deflector Chute Control Assembly 12

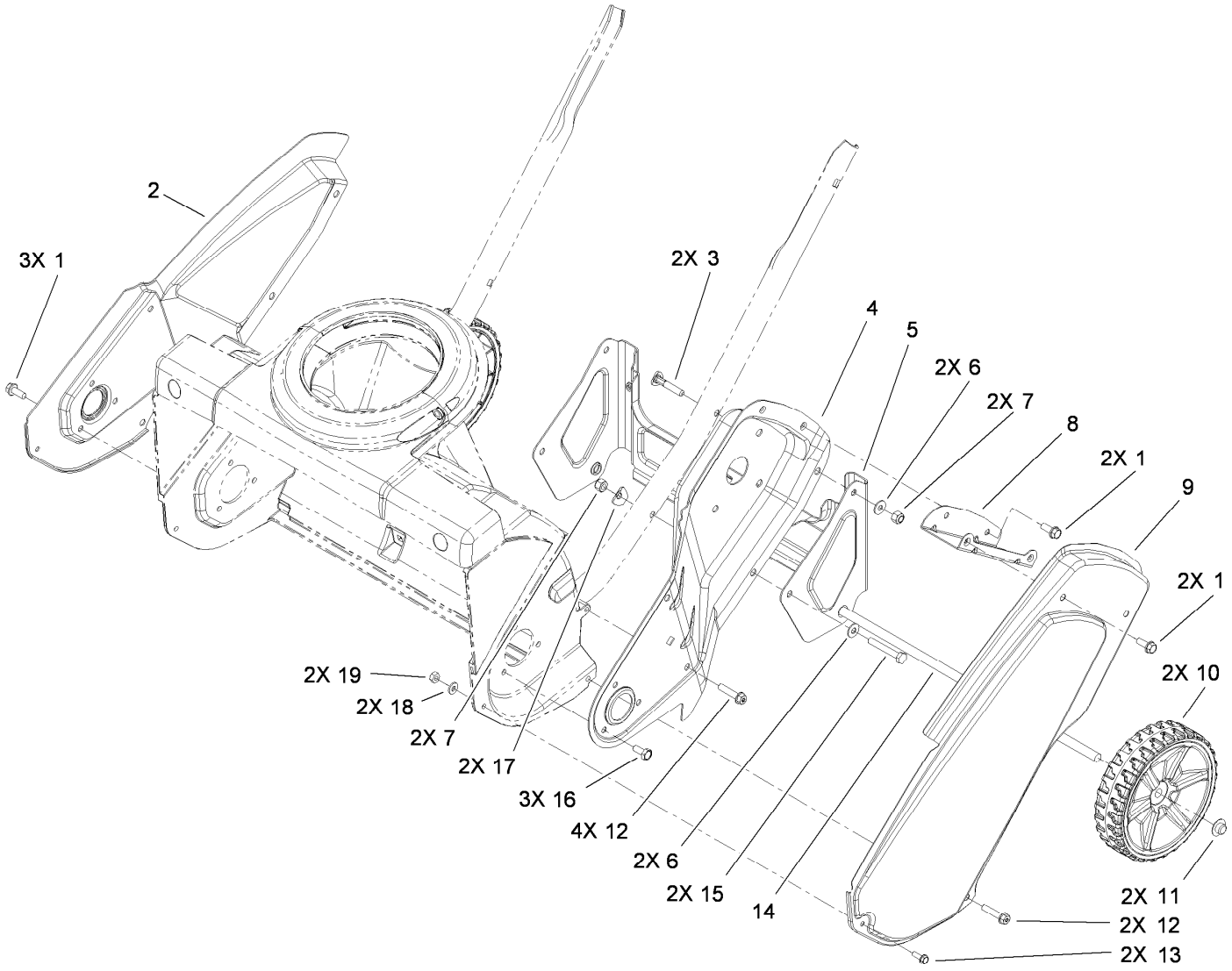

Main Frame and Wheel Assembly

Ref.	Part Number	Qty.	Description
1	32144-85	7	Screw-HWH
2	117-7704-03	1	Sideplate-RH
3	117-7737	2	Screw-Handle
4	117-2349-03	1	Sideplate-LH
5	117-7702-03	1	Bracket-Wheel
6	3256-1	4	Washer-Flat
7	3296-73	4	Nut-Lock, NI
8	117-2334-03	1	Bracket-Cover, Belt
9	117-7703-03	1	Cover-Belt
10	117-2306	2	Wheel ASM

Ref.	Part Number	Qty.	Description
11	3290-320	2	Retainer-Push On
12	46-8094	6	Screw-Plastite
13	32105-23	2	Screw
14	117-2339	1	Axle
15	321-53	2	Screw-HH
16	114-9291	3	Screw-HH, Taptite
17	3-7501	2	Washer
18	3256-14	2	Washer-Flat
19	3296-2	2	Nut-Lock, NI

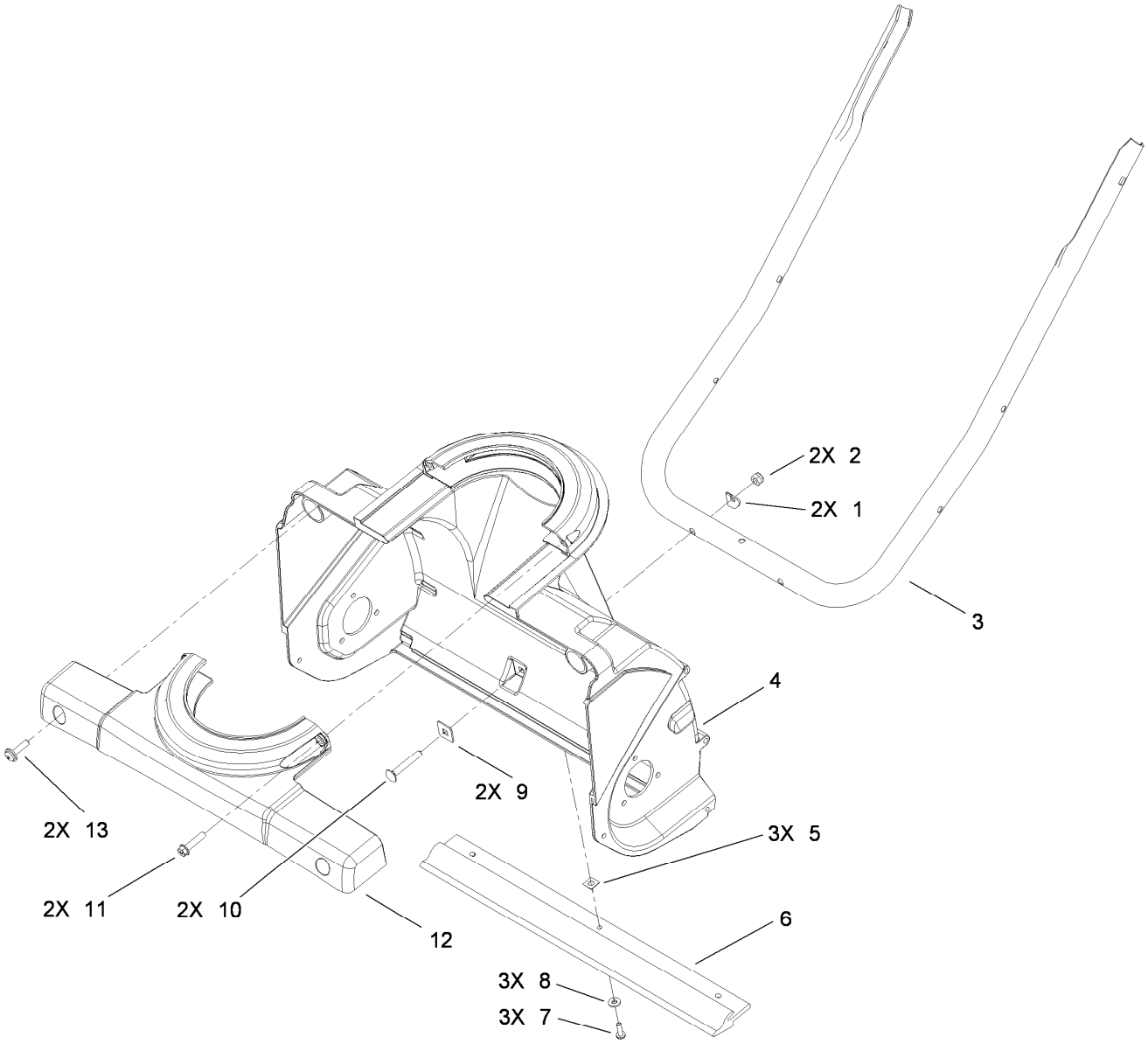

Auger Housing Assembly

Ref.	*Part Number*	*Qty.*	*Description*
1	3-7501	2	Washer
2	3296-73	2	Nut-Lock, NI
3	117-2348-03	1	Handle-Lower
4	117-2331	1	Housing-Lower
5	32115-19	3	Nut-Clip, U
6	117-7717	1	Scraper
7	32144-34	3	Screw-HWHTF
8	3256-14	3	Washer-Flat
9	75-9040	2	Washer-Square
10	3229-5	2	Screw-CARR
11	46-8094	2	Screw-Plastite
12	117-2332	1	Retainer-Chute
13	110-9361	2	Screw-PPH, Sems

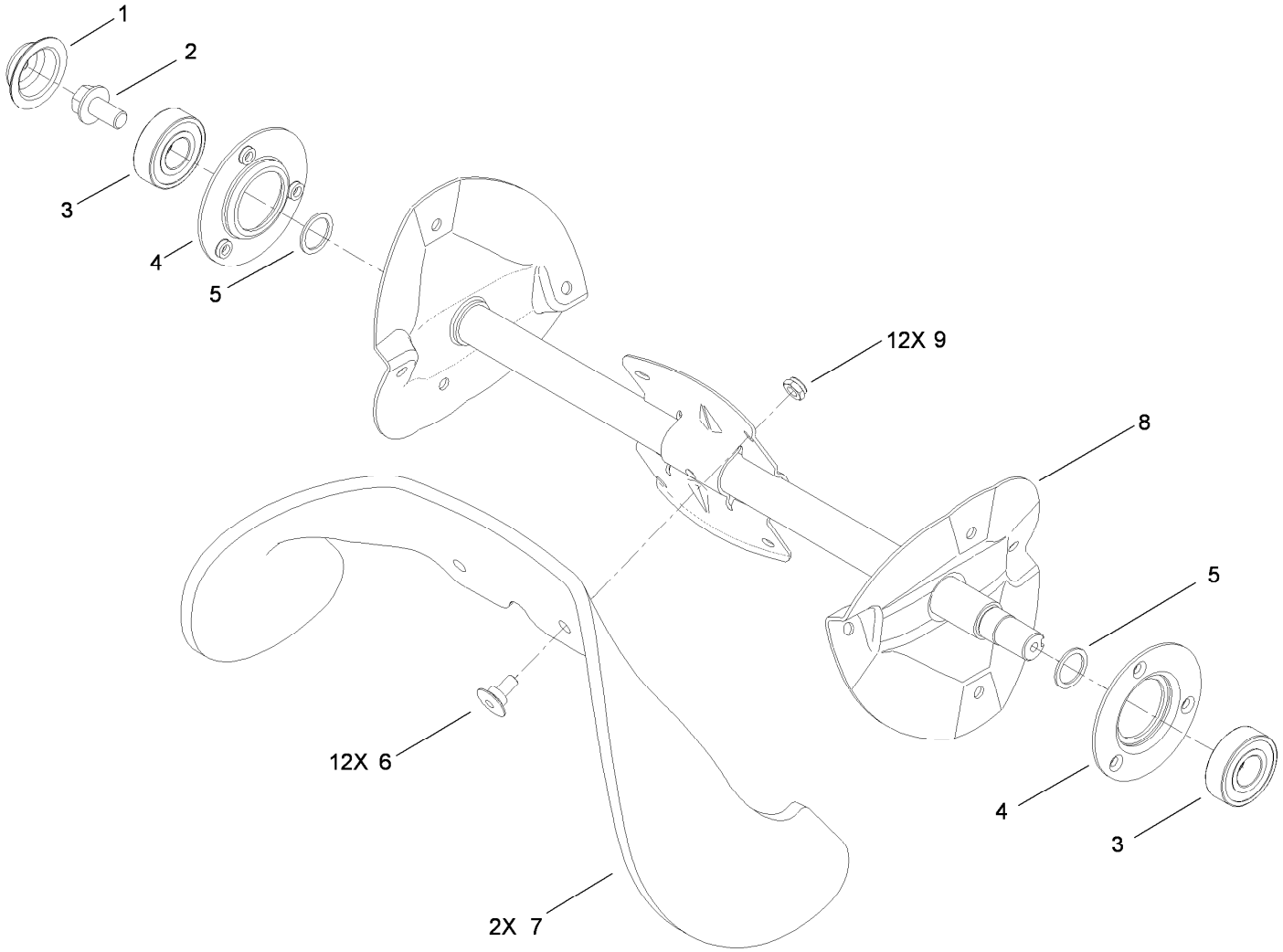

Rotor Drive Assembly

Ref.	*Part Number*	*Qty.*	*Description*
1	117-7720	1	Cap-Sideplate, RH
2	110-9380	1	Screw-HWH
3	100-1048	2	Bearing-Ball
4	112-8105	2	Flange-Bearing
5	52-7280	2	Washer-Thrust
6	84-1970	12	Screw
7	117-7700	2	Blade-Rotor
8	117-2315-03	1	Rotor ASM
9	3296-56	12	Nut-Lock, NI

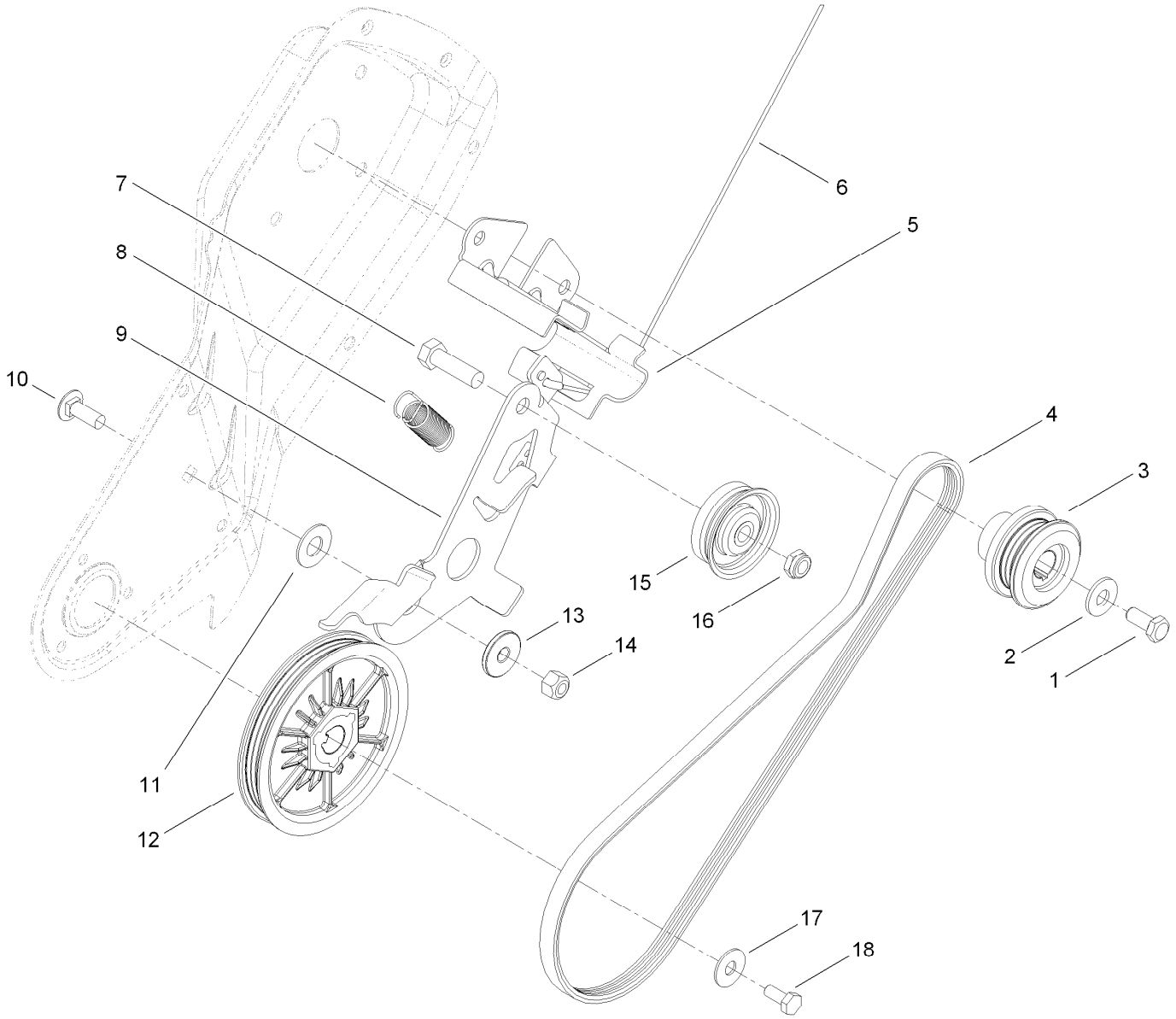

Belt and Drive Assembly

Ref.	Part Number	Qty.	Description
1	3235-6	1	Screw-HH
2	3256-71	1	Washer-Flat
3	117-7734	1	Pulley-Engine
4	117-7733	1	Belt-V, Ribbed
5	119-2907	1	Guide-Belt
6	117-7721	1	Cable-Clutch
7	323-44	1	Screw-HH
8	117-7715	1	Spring-Brake
9	117-7735	1	Arm-Idler

Ref.	Part Number	Qty.	Description
10	3230-10	1	Screw-CARR
11	25-5640	1	Washer
12	117-7732	1	Rotor Pulley ASM
13	117-7711	1	Bushing-Idler
14	3296-29	1	Nut-Lock, NI
15	117-9105	1	Pulley-Idler
16	3296-59	1	Nut-Lock, NI
17	3290-456	1	Washer-Belleville
18	110-9381	1	Screw-HH

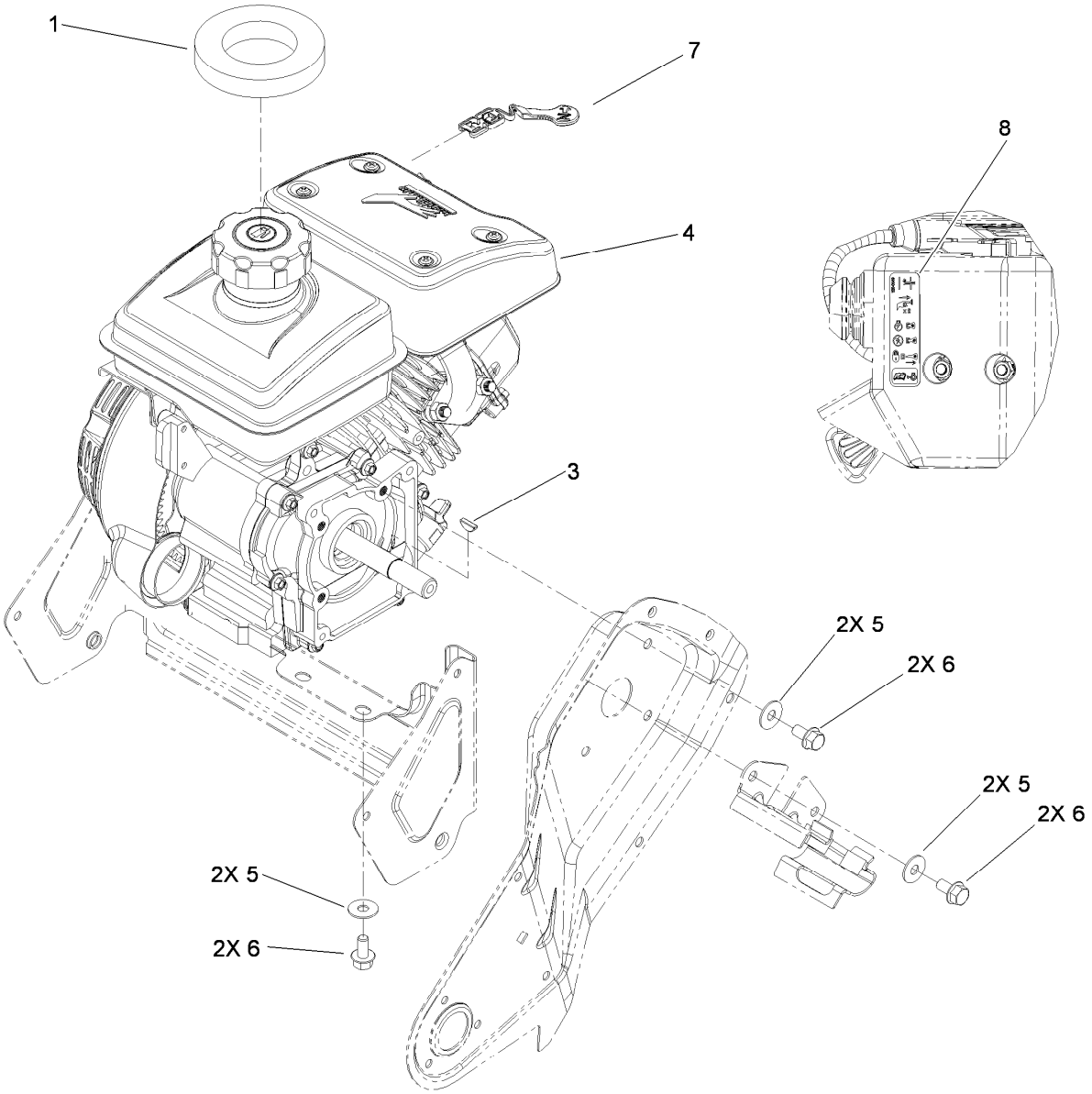

Engine and Mounting Assembly

Ref.	*Part Number*	*Qty.*	*Description*
1	117-7723	1	Seal-Tank
3	3257-3	1	Key-Woodruff
4	119-1974	1	Engine-Recoil
5	3290-456	6	Washer-Belleville
6	33104-016	6	Screw-HHF
7	117-7727	1	Lever-Choke
8	120-0149	1	Decal-Engine Controls

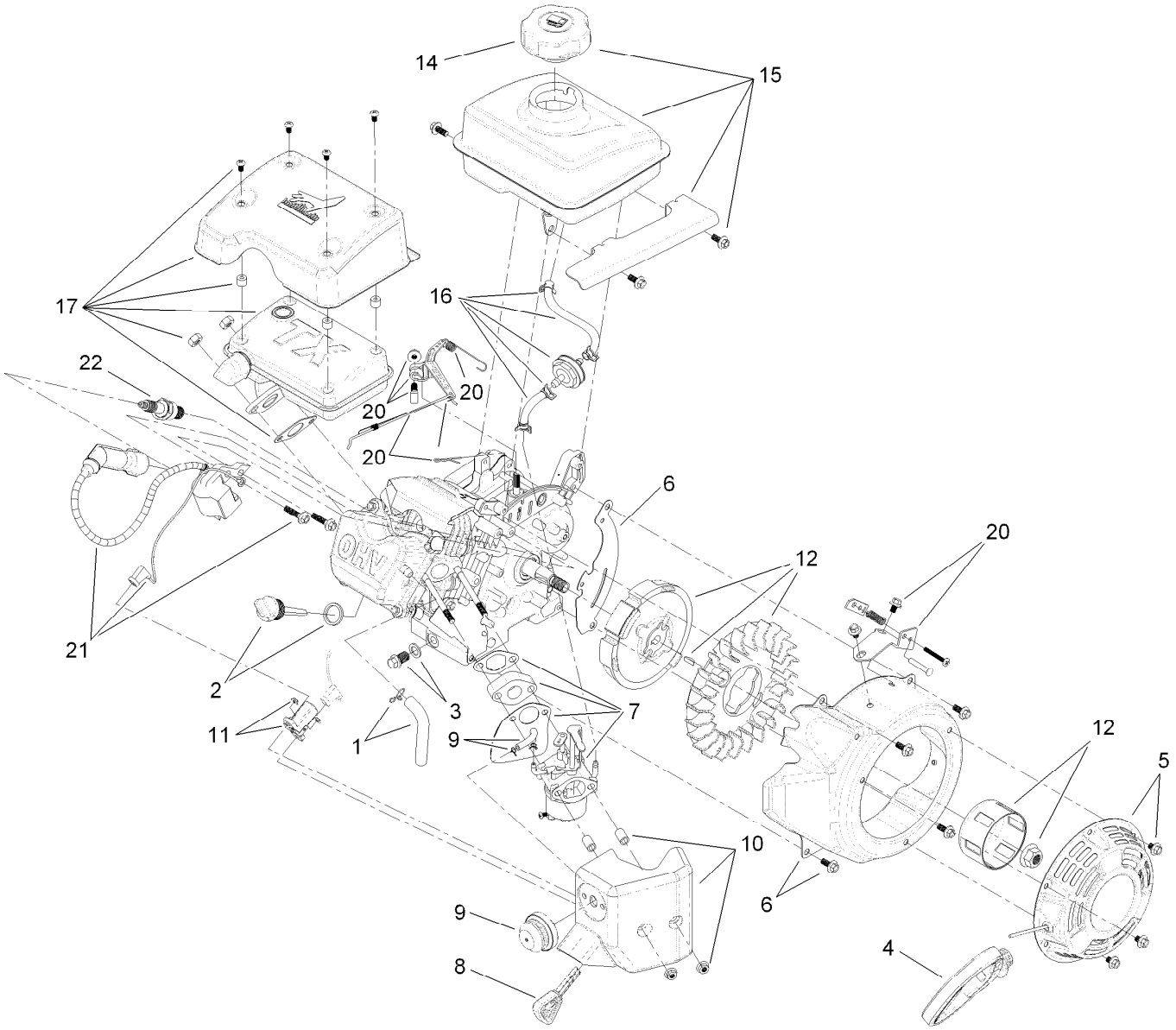

Engine Assembly

Ref.	Part Number	Qty.	Description
1	119-1921	1	Breather Tube Kit
2	119-1922	1	Dipstick And O-Ring Kit
3	119-1923	1	Drain Plug Kit
4	119-1924	1	Mitten Grip Kit
5	119-1925	1	Recoil And Mounting Hardware Kit
6	119-1927	1	Recoil Blower Shroud And Hardware Kit
7	119-1980	1	Carb, Gasket, Shield And Hardware Kit
7	119-1988	1	Carburetor Repair Kit
8	119-1929	1	Key And Lanyard Kit
9	119-1981	1	Primer, Base, Line And Clamp Kit
10	119-1982	1	Heater Box And Hardware Kit
11	119-1932	1	Switch And Hardware Kit
12	119-1962	1	Flywheel And Fan Kit
14	119-1984	1	Fuel Cap ASM Kit
15	119-1985	1	Fuel Tank, Cap And Hardware Kit
16	119-1937	1	Fuel Line, Filter And Clamp Kit
17	119-1938	1	Muffler, Shield, Gasket And Hardware Kit
18	119-1939	1	Complete Gasket, Seal And O-Ring Kit ●
20	119-1987	1	Governor Arm, Spring, Link, Hardware Kit
21	119-1960	1	Ignition And Mounting Hardware Kit
22	119-1961	1	Spark Plug

● Not illustrated

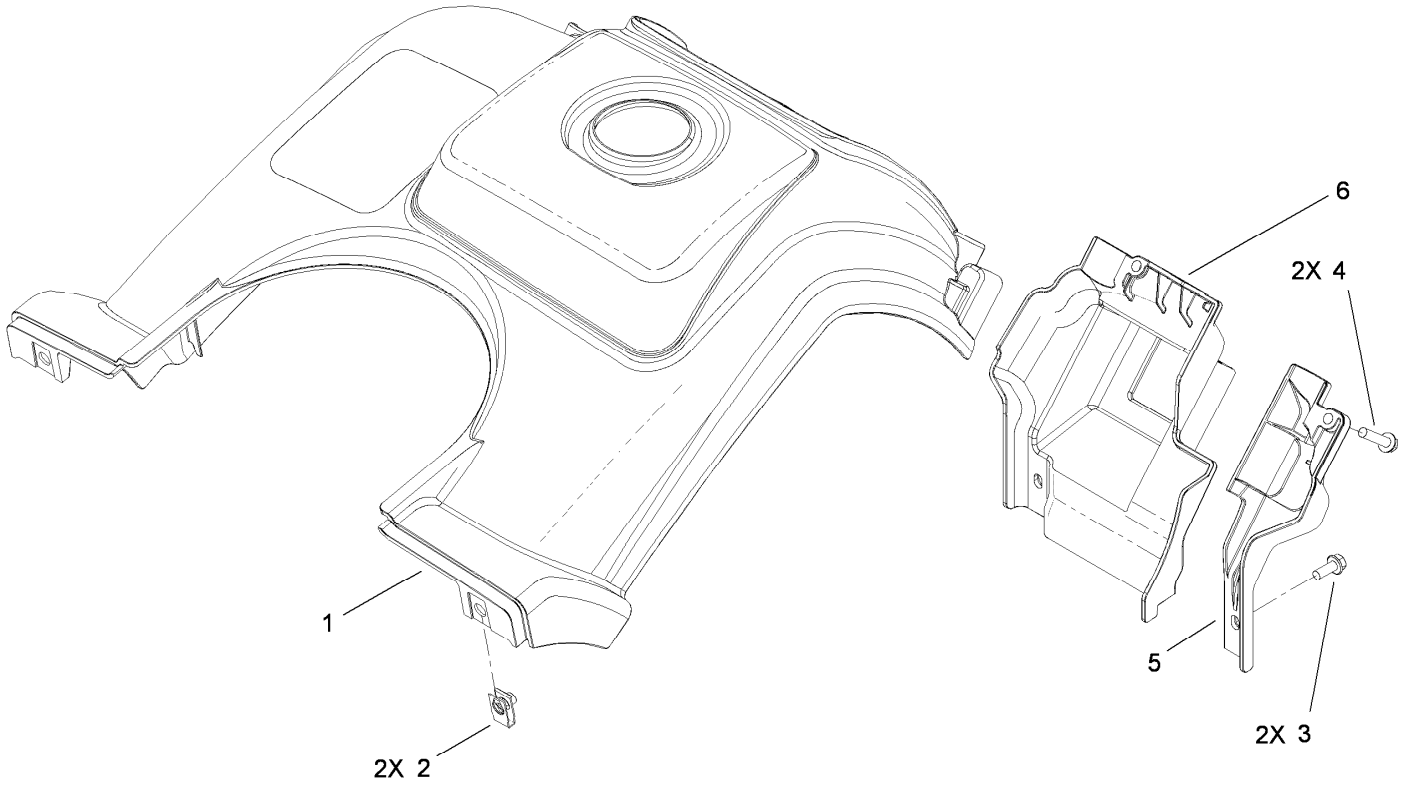

Shroud Assembly

Ref.	*Part Number*	*Qty.*	*Description*
1	117-7744	1	Shroud ASM
2	107069	2	Clip
3	32144-85	2	Screw-HWH
4	46-8094	2	Screw-Plastite
5	117-7719	1	Shroud-Lower, LH
6	117-7729	1	Shroud-Lower, RH

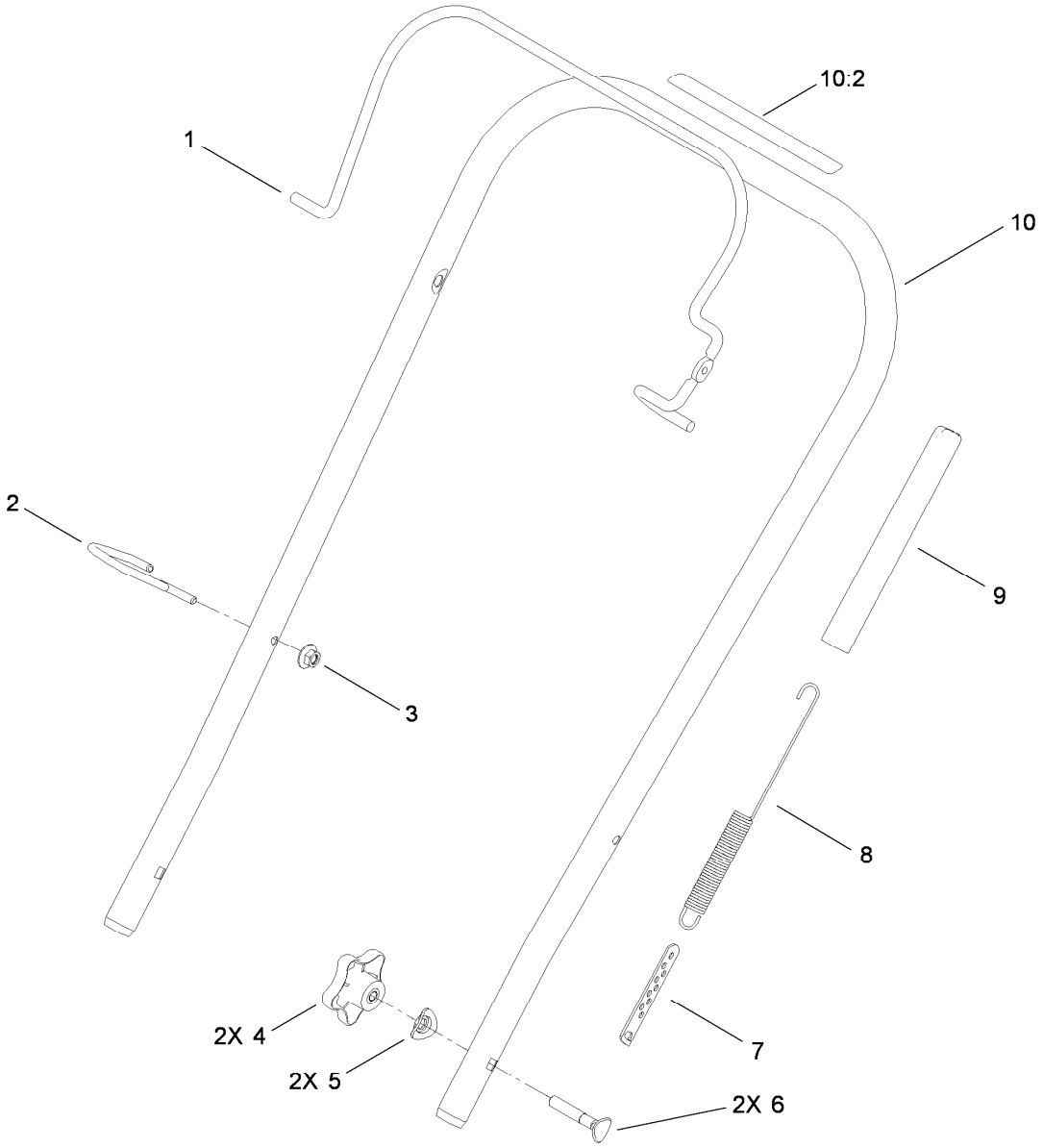

Handle Assembly

Ref.	*Part Number*	*Qty.*	*Description*
1	117-7718-03	1	Bail-Clutch
2	117-7712	1	Guide-Rope, Recoil
3	114-3778	1	Nut-Lock, NI
4	106-4161	2	Knob-Handle
5	107-3844	2	Washer
6	92-2260	2	Screw-Handle
7	71-5330	1	Adjuster-Cable, Clutch
8	119-2913	1	Spring-Clutch
9	114-3796	1	Cover-Spring
10	117-7743	1	Upper Handle ASM
10:2	117-7713	1	Decal-Safety

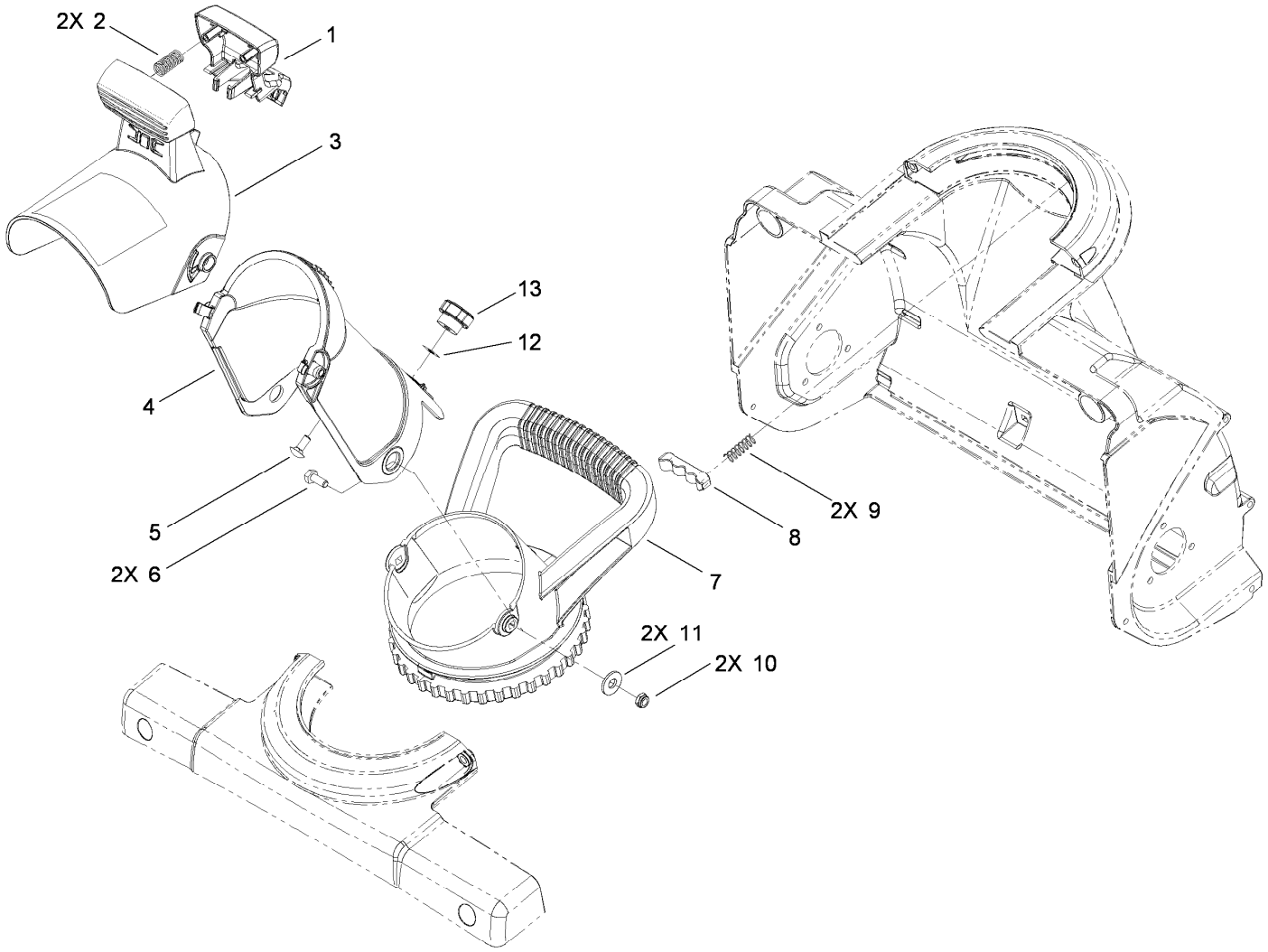

Deflector Chute Control Assembly

Ref.	*Part Number*	*Qty.*	*Description*
1	117-2314	1	Trigger-Deflector
2	110-9360	2	Spring-Compression
3	117-7742	1	Chute Deflector ASM
4	117-2312	1	Chute-Discharge
5	3229-11	1	Screw-CARR
6	321-3	2	Screw-HH
7	117-2345	1	Handle-Chute
8	75-9160	1	Detent-Chute
9	75-9170	2	Spring-Compression
10	3296-56	2	Nut-Lock, NI
11	3256-81	2	Washer-Flat
12	32115-15	1	Pushnut-Retainer, Bolt
13	233-67	1	Knob-Chute

Notes:

Notes:

Notes:

TORO®

Count on it.